https://nppnovoteh.com

PART VII: THE CX PRODUCTION PROGRAMME

I. Preliminary information 149
II. Bearing tracks and directions of load transfer 151
III. Description of rolling bearing designations 152

TABLES OF PRODUCTS:
1. RADIAL CONTACT DEEP-GROOVE BALL BEARINGS 156
1.1 Single-row deep grove ball bearings – miniature (1 mm – 9 mm) 160
1.2 Single-row deep grove ball bearings – dimensions from 10 mm – non-sealed 170
1.3 Single-row deep grove ball bearings - dimensions from 10 mm – sealed RS 186
1.4 Single-row deep grove ball bearings - dimensions from 10 mm – sealed ZZ 196
1.5 Single-row deep grove ball bearings for magnetos 206
1.6 Double-row deep grove ball bearings 208
2. ANGULAR-CONTACT RADIAL BALL BEARINGS 212
2.1 Single-row angular-contact ball bearings – standard 216
2.2 Single-row angular-contact ball bearings – for assembly in pairs 230
2.3 Single-row angular-contact high-speed ball bearings 244
2.4 Double-row angular-contact ball bearings 256
2.5 Single-row angular-contact double-direction ball bearings (Q, QJ) 264
3. SELF-ALIGNING RADIAL BALL BEARINGS 274
3.1 Self-aligning ball bearings 276
4. TAPERED ROLLER BEARINGS 286
4.1 Tapered roller bearings – metric dimensions 290
4.2 Tapered roller bearings – inch dimensions 304
4.3 Tapered roller bearings – inch dimensions, auxiliary table for data retrieval according to index 352
5. CYLINDRICAL ROLLER BEARINGS 358
5.1 Single-row cylindrical roller bearings – types – NU, NUB, NUC 364
5.2 Single-row cylindrical roller bearings – types – NJ, NJP 384
5.3 Single-row cylindrical roller bearings – types – NH, NUJ 404
5.4 Angular rings for cylindrical roller bearings – HJ 412
5.5 Single-row cylindrical roller bearings – type – NUP 420
5.6 Single-row cylindrical roller bearings – types – N, NF, NP 440
5.7 Multi-row cylindrical roller bearings – types – NN, NN..K 468
5.8 Multi-row cylindrical roller bearings – types – NNU, NNU..K 476
5.9 Cageless cylindrical roller bearings – types – NCF, NJF, NNC, NNCF, NNCL, NNF 484
6. NEEDLE ROLLER BEARINGS AND RELATED BEARINGS 496
6.1 Solid needle roller bearings – types – NA, NKI, NAO 502
6.2 Thin-walled needle roller bearings – types – HK, BK 526
6.3 Needle roller and cage assemblies – types K, KK 538
6.4 Needle roller and cage assemblies – types KBK, KZK 558
6.5 Adjustable needle roller bearings – type – PNA 560
6.6 Combined needle roller bearings – type – NX 562
6.7 Combined needle roller bearings – types – NKIA & NKIB 564
6.8 Combined needle roller bearings – type – NKX 566
6.9 Combined needle roller bearings – type – NKXR 568
6.10 One-way clutches – type – HF 570
6.11 Internal rings for needle and cylindrical roller bearings – IR 572
7. SPHERICAL ROLLER BEARINGS 588
7.1 Single-row and double-row spherical roller bearings 592
7.2 Spherical roller bearings with adapter sleeve 618
7.3 Spherical roller bearings with withdrawal sleeve 630
8. THRUST BALL BEARINGS 642
8.1 Single-direction thrust ball bearings 646
8.2 Double- direction thrust ball bearings 658

https://nppnovoteh.com

8.3 Spherical washers for thrust ball bearings....666
9. ANGULAR-CONTACT DOUBLE-DIRECTION THRUST BALL BEARINGS....668
9.1 Angular contact thrust ball bearings....670
10. CYLINDRICAL ROLLER THRUST BEARINGS....674
10.1 Cylindrical roller thrust bearings....676
11. NEEDLE ROLLER THRUST BEARINGS....684
11.1 Thrust needle roller and cage assemblies – AXK....686
12. SPHERICAL ROLLER THRUST BEARINGS....688
12.1 Spherical roller thrust bearings....690
13. GUIDE ROLLERS....696
13.1 Guide rollers with a hole....700
13.2 Guide rollers with a mandrel....704
13.3 Rolling rollers with a hole....706
13.4 Rolling rollers with a mandrel....712
14. INSERT BALL BEARINGS....714
14.1 Insert ball bearings – type – K6....718
14.2 Insert ball bearings – type – SA....720
14.3 Insert ball bearings – type – FD....722
14.4 Insert ball bearings – type – SB....724
14.5 Insert ball bearings – type – UC....726
14.6 Insert ball bearings – type – UK....730
15. BEARING UNITS AND BEARING HOUSINGS....732
15.1 Cast-iron bearings units with insert ball bearings – type – UCP....736
15.2 Cast-iron bearings units with insert ball bearings – type – UCPA....740
15.3 Cast-iron bearings units with insert ball bearings – type – UCF....742
15.4 Cast-iron bearings units with insert ball bearings – type – UCFL....746
15.5 Cast-iron bearings units with insert ball bearings – type – UCFC....748
15.6 Cast-iron bearings units with insert ball bearings – type – UCT....750
15.7 Cast-iron bearings units with insert ball bearings – type – UKP....754
15.8 Cast-iron bearings units with insert ball bearings – type – UKF....756
15.9 Cast-iron bearings units with insert ball bearings – type – UKFL....758
15.10 Cast-iron bearings units with insert ball bearings – type – UKFC....760
15.11 Cast-iron bearings units with insert ball bearings – type – UKT....762
15.12 Split bearing housings for spherical roller and self aligning bearings – type SN....764
15.13 Split bearing housings for spherical roller and self aligning bearings – type SNU....768
16. LINEAR BALL BEARINGS....772
16.1 Thin-walled and solid linear ball bearings....774
17. PLAIN BEARINGS....778
17.1 Radial spherical plain bearings....782
17.2 Thrust spherical plain bearings....792
17.3 Rod ends – type SA....794
17.4 Rod ends – type SI....796
17.5 Slide bearings – type TUP....798
17.6 Slide bearings – type TUF....814
17.7 Slide bearings – type TUW....816
17.8 Slide bearings – type TUZ....818
18. BEARING SLEEVES....820
18.1 Withdrawal sleeves....824
18.2 Adapter sleeves....838
18.3 Lock nuts – type KM....848
18.4 Lock nuts – type HM....850
18.5 Lock nuts – type KMT....854
18.6 Lock nuts – type KMTA....856
18.7 Lock washers – type MB....858
18.8 Lock washers – type MS....860
19. SNAP RINGS....862
19.1 Inner snap rings....864
19.2 Outer snap rings....868
20. ROLLING ELEMENTS....872
20.1 Balls....876
20.2 Cylindrical rollers....880
20.3 Needles....884
21. SPECIAL BEARINGS....886
21.1 Special bearings....887
22. CROSS LIST GOST....902
23. INDEX....942
24. INDEX OF PHOTOS....988
25. Notebook....1014

I. Preliminary information

1. Classification and division of rolling bearings (see "General classification of rolling bearings" on page 15).

Depending on theoretical contact angle of a bearing (**α**) we distinguish for:

- **α** from the range between 0º and 45º - radial rolling bearings
- **α** from the range between 45º and 90º - thrust rolling bearings

1.1 Radial bearings

- single-row deep-groove ball bearings
- double-row deep-groove ball bearings
- single-row angular-contact ball bearings
- single-row angular-contact double-direction ball bearings with inner split ring
- angular-contact double-row ball bearings
- self-aligning ball bearings
- single-row cylindrical roller bearings
- double-row cylindrical roller bearings
- single-row and double-row cylindrical roller bearings with full number of rolling elements
- needle roller bearings
- needle roller and cage assemblies
- single-row spherical roller bearings
- double-row spherical roller bearings
- self-aligning bearings.

1.2 Thrust bearings

- single-direction ball bearings
- double-direction ball bearings
- angular-contact single-direction ball bearings
- angular-contact double-direction ball bearings
- cylindrical single-row roller bearings
- cylindrical double-row roller bearings
- needle roller bearings
- needle roller cage assemblies
- spherical roller bearings

1.3 Tapered bearings

- single-row tapered bearings
- multi-row tapered bearings
- tapered thrust roller bearings (solely axial load).

2. Dimensions and standards

Rolling bearings are conventionally made of special chromium steel. Rings and rolling elements are subject to heat treatment, which enables obtaining a standard hardness in the range of 60-65 HRC and dimensions' stability up to 120ºC. Bearings dimensions are precisely defined and standardized. In most countries the metric system is in use, in the countries of the British Commonwealth inch designations are predominant and in the countries of the former USSR a completely different system is in use. Bearings are made in batches so within a given batch the relation of main bearing dimensions is approximately a constant value. The only dimension one can easy find in the bearing symbol is its inside diameter.

Symbols representing main dimensions of bearings have been standardized and are as follows:

- **d** inside diameter
- **D** outside diameter
- **B** width of a radial bearing, for tapered roller bearings - width of an inner ring
- **T** width of a assembled tapered rolling bearing, dimensioned from frontal surfaces of both rings
- **C** diameter of inner ring of a tapered roller bearing
- **H** height of the thrust bearing
- **Fw** or **Fz** diameter of a circle inscribed in the contour of the rolling elements of a cylindrical, needle bearing or a circle circumscribed in the contour of these elements. Fw size becomes the main dimension, when a bearing does not have a split ring, e.g. RN205, RNU310.

3. Accuracy classes (see "Dimensional accuracy of radial bearings on page 115)

Tolerances of rolling bearings define the accuracy classes of main dimensions of internal and outer rings, their shapes and rotation accuracy, that is the mutual placement of a track, bore, outer diameter and faces. These parameters have been standardized by ISO. Depending on the size of permissible deviations the following accuracy categories are distinguished:

- **P0** normal, not determined
- **P6** higher than normal
- **P5** higher than P6
- **P4** higher than P5
- **SP** higher than P4 – super precision
- **UP** higher than SP – ultra precision

With regard to some bearings types e.g. 608 it is often the case that American scale of accuracy classes is used:

- **ABEC1** higher than normal
- **ABEC3** higher than P6
- **ABEC5** higher than P5
- **ABEC7** higher than P4

https://nppnovoteh.com

4. Clearance

Clearance means the magnitude of displacement of one ring in relation to the other. Depending on the displacement direction one distinguishes the following types of clearance **(see the section "Selecting of internal bearing clearances and fits" on page 66):**

- **axial** – maximum axial displacement of one ring in relation to the other without exerting any pressure
- **radial** - maximum radial displacement of one ring in relation to the other without exerting any pressure

In most bearings (e.g. except in angular-contact ball bearings) radial clearance is more important, so it is mostly determined and marked:

- **C1** smaller than C2
- **C2** smaller than normal
- **normal** is not to be marked
- **C3** higher than normal
- **C4** higher than C3
- **C5** higher than C4

5. Silent-running

Silent-running feature or in other words reduced vibration level regards some bearings makings that are used in environments requiring silent and quiet operation. The following symbols are used:

- **normal** is not marked
- **C6** reduced vibration level
- **C66** very low vibration level

NOTE!

Symbols of accuracy class, radial clearance and vibration level can be combined, whereas the **C** sign is omitted when the **P** sign also occurs. If the **P** sign does not occur, one **C** sign remains in place, e.g.:

P4 + C2 = P42
C3 + C66 = C366
P5 + C2 + C6 = P526

6. Heat stability

In places where the operation temperature of a bearing exceeds continuously 120°C one shall use bearings that have been subject to a special heat treatment stabilizing their dimensions. High temperature has doubly negative impact on bearings operation – on the one hand the material, i.e. steel, expands, what threatens to jam the bearing, on the other hand in the temperature over 150°C the hardness of hardened tracks gets reduced, what in turn causes the drop in load capacity of a bearing and permanent deformations. The following symbols are used to mark specific optimal temperature ranges of bearing operation. Stability regards both rings.

- **S00** up to 120°C is not marked
- **S0** up to 150°C
- **S1** up to 200°C
- **S2** up to 250°C
- **S3** up to 300°C

7. Lubricating holes and grooves designations

- **W20** lubricating holes in the outer bearing ring
- **W26** lubricating holes in the internal bearing ring
- **W33** lubricating groove and three lubricating holes in the outer bearing ring
- **S** as W33

8. Seals designations (see "Bearning seals" on page 77)

- **Z** one steel shield
  one-sided covering
- **ZZ** two steel shields
  two-sided covering
- **RS** one rubber seal
  one-sided covering
- **2RS** two rubber seals
  two-sided covering
- **ZRS** shield and seal
  two-sided covering

9. Designations regarding changes in outer dimensions or outer shape

- **X** changes of outer dimensions in comparison with the basic version
- **K** standard tapered bore, with 1:12 taper
- **K30** tapered bore with 1:30 taper, used for example with large dimensions
- **N** snap groove on the outer ring
- **NR** snap groove and springing snap ring on the outer ring

10. Designations regarding changes in the inner construction

These marking have different meaning with different types of bearings:

- **A** in the tapered roller bearing – increased dimensions and number of rollers (also E)
- **A, B, C** in the angular-contact bearing – different angle of track
- **E** strengthened version, enlargement and increase in the number of rolling elements
- **C** for spherical bearings – inner ring without lips, symmetrical rollers, slack guiding ring and stamped cage

11. Cage designations (see "Materials used for cages" on page 77)

- **C** stamped cage made of steel sheet or massive steel cage, in practice marked only in spherical bearings
- **M** massive cage made of brass, sometimes stamped from sheet brass
- **T** cage made of thermohardening materials – textolite, solely for high-speed bearings
- **TN, TN9, TVP, TVH, TNG** cages made from thermoplastic materials – polyamide strengthened with glass fiber, sensitive for temperature over 100°C
- **V** no cage, the complete number of rolling elements

Designation showing the way of guiding the cage is placed directly behind the cage symbol:

- **no marking** means guiding based on rolling elements
- **A** guiding based on outer ring
- **B** guiding based on inner ring

12. Other marks behind the symbol

- **EMQ** (electric motor quality) – higher standard according to CX
- **SQ** (standard quality) – standard making of a CX ball bearing
- **SS** stainless and acid resistant steel – it applies to CX ball bearings

https://nppnovoteh.com

II. Bearing tracks and directions of load transfer

Definition of directionality

Directionality means the possibility of transferring load in the axial direction.

In the context of the above mentioned we can distinguish single-direction bearings, double-direction bearings and such bearings that cannot transfer any axial load – in this case we speak about the lack of directionality.

NOTE! One often confuses the term “directionality” with axial fixing. It relates to cylindrical roller bearings in the first place. Cylindrical bearings do not transfer axial load on their tracks, but only through lips of their rings. With the help of these lips they can be fixed axially (e.g. NJ, NH, NUP, NUJ, NF, NP).

1. Tracks of radial-contact and tapered bearings and directions of axial loads transfer



Fig. 1

Single-row and double-row deep-groove ball bearings, no possibility of transferring axial load, i.e. no directionality

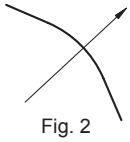

Fig. 2

Single-row angular contact ball bearings, decomposition of the indicated force into component forces shows the possibility of transferring axial loads in one direction, i.e. these are single-direction bearings.

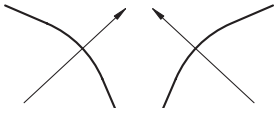

Fig. 3

Double-row angular contact ball bearings, the components of the drawn forces indicate two directions of possible axial load, i.e. these are double-direction bearings.

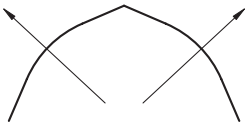

Fig. 4

Single-row angular contact ball bearings of the Q or QJ type, components of the forces shown indicate the possibility of axial load transfer in two directions, i.e. these are double-direction bearings.

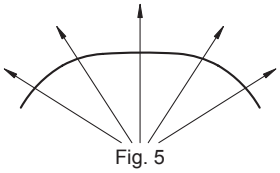

Fig. 5

Self-aligning and spherical ball bearings, components of the drawn forces prove that it is possible to transfer axial load in both directions, i.e. these are double-direction bearings.

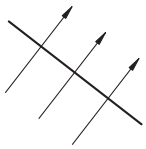

Fig. 6

Tapered bearings, components of forces as in case of angular-contact single-row ball bearings, that means these are single-direction bearings.

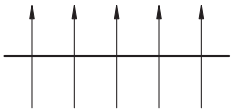

Fig. 7

Cylindrical and needle bearings, no resultant forces available in axial directions, what means that there is no possibility of transfer of axial loads, i.e. no directionality.

2. Tracks of thrust bearings, transfer of radial and axial load



Fig. 8

Single-row ball bearings 51…, possibility of axial load transfer in one direction – single-direction bearings, there is no possibility of radial load transfer.

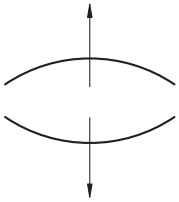

Fig. 9

Double-row ball bearings 52…, axial load transferred in both directions – double-direction bearings, there is no possibility of radial load transfer.

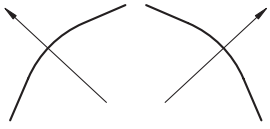

Fig. 10

Single-row angular contact ball bearings – axial load transferred in one direction – single-direction bearings, as seen in the picture it is also possible to transfer radial loads

https://nppnovoteh.com

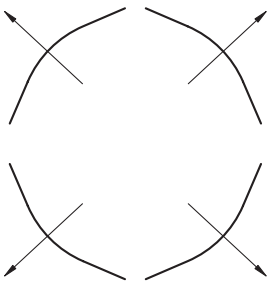

Fig. 11

Double-row angular contact ball bearings, axial load transferred in both directions – double-direction bearings, as seen in the picture it is also possible to transfer radial loads.

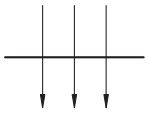

Fig. 12

Single-row cylindrical and double-row bearings, needle bearings, cylindrical roller assemblies, needle roller and cage assemblies, transfer of axial load in one direction – single-direction bearings, no possibility of transferring radial load.



Fig. 13

Spherical bearings, transfer of axial load in one direction – single-direction bearings, possibility of transfer of substantial radial load.

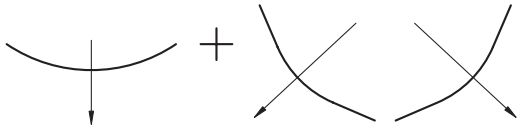

Fig. 14

Single-row ball bearings 53..U, with a spherical washer, as for 51-series bearings… - single-direction bearings, additional possibility of transferring radial load through the spherical washer.

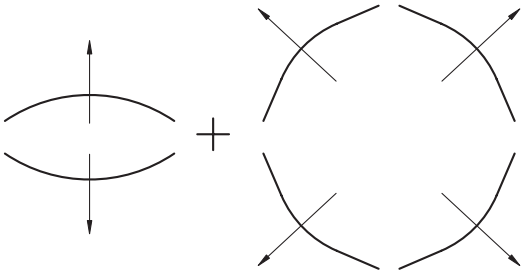

Fig. 15

Double-row ball bearings 54…U, with spherical washers as for 52-series bearings – double-direction bearings, additional possibility of transferring radial load through spherical washers.

III. Description of rolling bearing designations

Basic designations for rolling bearings are standardized and used by most manufacturers.

One shall give special attention to the sign standing before the basic number:

- **L** a free ring of a detachable bearing
- **R** a bearing without a detachable ring.

Actual bearing symbol can be divided into five basic parts, whereas one shall know that not all the parts have to be represented in a given symbol:

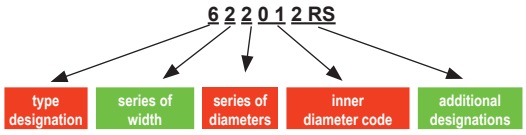

1. Bearing type designation
2. Numerical symbol of width series – only a width of a bearing
3. Numerical symbol of diameter series – size of a bearing
4. Numerical marking of an internal bearing diameter
5. Additional marking – tapered bore, angle, cage, seal, groove, accuracy classes, clearance, and the like.

The second and the third element are classified separately for radial, thrust and tapered bearings.

Elements marked with the GREEN color not always need to appear!

1. Bearing type designations

Most often it is a single digit or one or more letters. Exception to the rule are series 11… (e.g.11207), 16…(16001), 2344…(234412), 2347(234720). Letter symbols appear without digits except K6…(K6207), K8..

The list of bearing types' designations and accessories that are subject to the standards mentioned above

1.. self-aligning ball bearings (three- or four-digit symbol)
2.. self-aligning ball bearings (four-digit symbol)
2.. spherical bearings (five-digit symbol)
3.. angular-contact double-row radial ball bearings (four-digit symbol)
3.. tapered bearings (five-digit symbol)
4.. deep-groove double-row radial ball bearings (four-digit symbol)
5.. thrust ball bearings (five-digit symbol)
6.. deep-groove single-row radial ball bearings (three-, four- or five-digit symbol)

https://nppnovoteh.com

7.. single-row angular-contact radial ball bearings (four- or five-digit symbol)
8.. thrust cylindrical bearings
AH, H, OH bearing sleeves
HM, KM, KML, HML bearing nuts
MB, MBL, MS toothed and shaped washers
HJ angular rings of NH cylindrical bearings
K6 self-aligning bearings, e.g.K6206
FA, FD, FB, UC, SA, SB, SC, UK self-aligning bearings
N, NF, NP, RN single-row cylindrical radial bearings with replaceable outer ring
NU, NJ, NH, NUP, NUJ, NUB, NUC, NJP, RNU single-row cylindrical radial bearings with replaceable inner ring
NNU, RNNU, NN multi-row cylindrical radial bearings
NCF, NJF, NNC, NNCF, NNCL, NNF cylindrical radial bearings without a cage
NA, RNA needle bearings
Q, QJ single-row angular-contact double-direction radial ball bearings
UCP, UCPA, UCF, UCFL, UCFC, UCT bearing units

Many symbols of bearings and their accessories cannot be classified according to the standards mentioned above. It relates to the whole group of needle bearings, combined, rolling and carrying rollers, needle assemblies: K, KK, HK, BK, NK, NKI, NAO, PNA, NKX, NKXR,

NKIA, NKIB, NATR, NUTR, NUKR, NATV, KR, KRV, HF, HFL and the like, slide bearings and rod ends GE, SA, SAL, SI, SIL, and the like, needle bearings rings, cylindrical bearings rings IR, guide bars LM, KH, KB and many others.

2. Width series

It counts among symbols that are not always marked. Separate classification regards radial bearings, thrust bearings and tapered bearings.

Width series diagram for radial bearings:

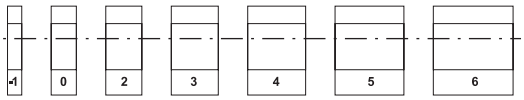

Each group has its own rules:
- for radial bearings the width series is put in the growing order: 1*, 0, (1), 2, 3, 4, 5, 6
  *) (-1) series relates to ball bearings 160.. and 161..
- for tapered bearings the width series is put in the growing order: 0, 1, 2, 3,
- for thrust bearings it is called a height series and is put in the growing order 9, 1, 3 – single-direction bearings and then 2 and 4 – double-direction bearings.

The number of the width series is not always provided. Some bearings groups always have it, e.g. tapered bearings, spherical bearings, thrust ball bearings, thrust cylindrical bearings.

If the series number has not been provided, we shall act to the following two rules to determine it:
- for single-row bearings the width series number equals **0**, and for double-row one equals **2**
- for self-aligning bearings of the 10.., 12.., 13.., 14..-series the no. of the width series is **0 – exception**
- **Note:** the width series for bearings of the 38..-, 39..-, 30.., 32..- and 33..-series is **3**.

3. Diameter series

It determines the bearing's size, i.e. for the constant internal diameter the change in diameter series causes the change in the outer diameter of a bearing as well as the change in its width. It means, that the diameter series represents the most important element of the bearing's symbol, because it defines the mutual relation of all main dimensions of a bearing – Fig.1.

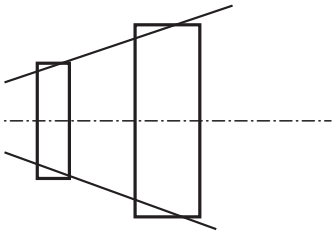

Fig.1.

Vivid proportions between width series are shown in the Figure 2

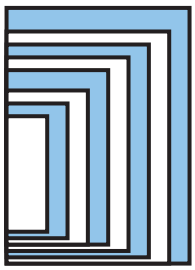

Fig. 2

The width series symbol is always provided! Separate classification relates to radial bearings, thrust bearings and tapered bearings. Each group has its own rules:
- for radial bearings the width series are put in the growing order: 7,8,9,0,1,2,3,4
- for tapered bearings the width series are put in the growing order: 9, 0, 1, 2, 3,
- for thrust bearings the width series are put in the growing order: 1, 2, 3, 4.

4. Designation of an internal bearing diameter "d"

Defines precisely, with the help of the diagram shown below, what is the internal diameter of a bearing in mm.

The system of marking the internal diameter is as follows:
- for internal diameters between 1 mm and 9 mm the actual dimension is provided in the form of on digit. For 617, 618, 619 series the sign "/" is put before the actual dimension. e.g. 618/7. The rules provides that, for 3-digit-series bearings (e.g.619, 638, and the like) the size smaller than 10 mm is always separated by the "/"-sign.
- for the 10 mm internal diameter the designation is "00",
- for the 12 mm internal diameter the designation is "01",
- for the 15 mm internal diameter the designation is "02",
- for the 17 mm internal diameter the designation is "03",
- for internal diameters between 20 mm and 480 mm and also divisible through 5 the marking is made by dividing the actual size by 5. When we obtain a one-digit result of this division, we shall add zero before the result. For example, when we have the inner diameter of 20 mm the marking is "04", for 25 mm diameter the marking is: "05", 50 mm – "10" and so on.

https://nppnovoteh.com

- for internal diameters above 480 mm and for other diameters not divisible through 5 the marking is made by inserting the "/" sign and providing the actual size, e.g. 500 mm – "/500", 22 mm – "/22" and so on.

5. Additional markings

- tapered bore (K, K30)
- change in the inner construction (A, B, C, D, E) or outer construction (X)
- cage designation (C, M, T, TV, and so on), or the lack of it (V) and the guidance of the cage (A, B)
- seal (RS, 2RS, Z, ZZ, RSZ and others)
- snap groove (N) and springing ring
- lubricating holes and grooves (W20, W26, W33, S)
- accuracy class (P6, P5, P4, SP, UP, ABEC1, ABEC3, ABEC5 etc.)
- radial or axial clearance reduced (C2, C1) or increased (C3, C4, C5)
- clearance for bearings with not replaceable rings (cylindrical and solid needle bearings) (NA)
- silent-running feature – reduced vibration level (C6, C66)
- heat stability (S0, S1, S2, S3, S4, and so on).
- other markings regarding the type of lubricate, special features, etc.)

https://nppnovoteh.com

1. RADIAL CONTACT DEEP-GROOVE BALL BEARINGS

ŁOZYSKA TOCZNE

CUSCINETTI



https://nppnovoteh.com

TABLES:

1.	RADIAL CONTACT DEEP-GROOVE BALL BEARINGS
1.1	Single-row deep-groove ball bearings – miniature (1 mm – 9 mm)
1.2	Single-row deep-groove ball bearings – dimensions from 10 mm – non-sealed
1.3	Single-row deep-groove ball bearings - dimensions from 10 mm – sealed RS
1.4	Single-row deep-groove ball bearings - dimensions from 10 mm – sealed ZZ
1.5	Single-row deep-groove ball bearings for magnetos
1.6	Double-row deep-groove ball bearings

INTRODUCTION:

1. Radial contact single-row and double-row deep-groove ball bearings

1.1. Dimension series

- single-row - 617.. 618.. 628.. 638.. 619.. 160.. 60.. 630.. 161.. 62.. 622.. 632.. 63.. 623.. 633.. 64..
- double-row - 42.. 43..
- magneto - E.. Bo.. L.. M..

1.2. Structure

Radial contact single-row and double-row ball bearings are inseparable and consist of an outer ring, an inner ring and a cage with balls.
They are, above all, adapted for operation with high rotational speed and designed for transferring radial loads. Ball bearings can also normally transfer small loads, in the narrow range, in the axial direction, especially double-row bearings.



Fig.1 Single-row radial contact deep-groove ball bearing, uncovered version

They rank among most commonly used rolling bearings because of their simple construction, numerous construction variants and low prices. Ball bearings for magnetos miss one of the lips on the outer ring and that is why they are dismountable. This feature enables separate mounting of both rings.

1.3. Construction variants

Depending on needs deep-groove ball bearings can be delivered in various construction variants, e.g. with reduced or increased clearance, with higher accuracy classes or with special cages suited for operation with high rotational speed.



Fig.2 Double-row radial contact deep-groove ball bearing, uncovered version

Furthermore deep-groove ball bearings are manufactured in many construction variants, what enables substantial simplification or improvement of bearing-closed pairs used in machines and installations. The best example for this may be the application of bearings with ZZ-type steel shields or 2RS-type rubber seals or a groove in the N-type outer ring for fixing a bearing in the mounting in the longitudinal direction with the help of the R-type ring. Bearings with two steel shields or two rubber seals are filled by the manufacturer with a proper amount of plastic lubricant, that will do for the whole life of a bearing under normal operation conditions.



Fig.3 Single-row radial contact deep-groove ball bearing, version with steel shields mounted on both sides

https://nppnovoteh.com

For special uses one also manufactures bearings with a tapered bore of 1:12 taper for mounting them with bearing sleeves. And in aggressive environment ball bearings made of acid resistant steel (SS designation behind the bearing's symbol) are used.

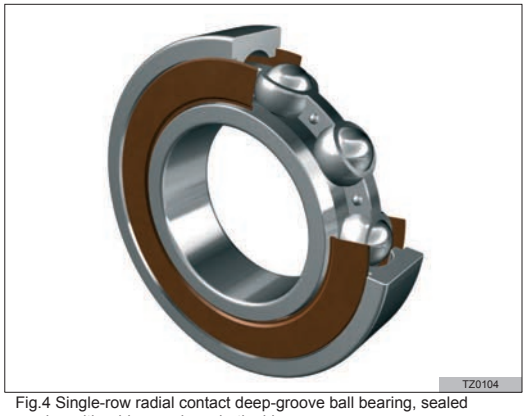

Fig.4 Single-row radial contact deep-groove ball bearing, sealed version with rubber seals on both sides

1.4. Cages

Standard cages of radial contact deep-groove ball bearings are made most often of steel sheet. One can quite often encounter bearings with light cages made of thermoplastic material, too. However, the use of such bearings is highly reduced because the material they are made of is not stable to heat. Bearings of larger sizes are usually equipped with massive steel or brazen cages.
In high-speed bearings solid cages made of heat-hardening material, textolite (T symbol) are used. The cages, because of their low weight, have a low moment of inertia, what in turn enables them to reach very high rotational speed. Also the vibration level of textolite cages is the lowest in comparison with cages made of other materials, and continuous operation temperature of heat-hardening material can be above 100°C.

1.5. Features

Single-row radial contact deep-groove ball bearings of narrow series feature very high rotational parameters with relatively low load capacities. Wide series are characterized by high load capacity and rigidity, but definitely lower rotational parameters. Compared to single-row series, double--row series feature higher ability to transfer axial load and to reach higher rigidity of the bearing-closed pair. Sealed bearings are, above all, designed for devices with rotating internal ring. In case of construction solutions with rotating outer ring, the lubricant outflow is possible even with relatively low rotational speed. With applications where the vibration level (noise) is very important. e.g. home appliances, the P66EMQ-version bearings are recommended.

1.6. Misalignment

Ball bearings have normally a reduced ability of angular displacement. For that reason the surfaces of mounting points should be coaxial. All inaccuracies in this regard result in adverse ball operation and additional stresses, what in turn reduces the longevity of the bearing. Permissible angular misalignment in a bearing depends on such factors as: radial clearance, size and internal construction of a bearing and forces and moments acting upon it.

1.7. Heat stability

Ball bearings of standard makes can be usually operated in temperatures ranging from –30 do +120°C.
For larger bearings the upper temperature limit reaches 200°C. Under operating conditions other than normal, e.g. high rotational speed or higher temperature, one uses heat-stabilized bearings suited for an appropriate temperature level (with S0, S1, S2, S3 designation behind the symbol). Filling the sealed bearings with a special temperature-resistant lubricant substantially improves their capacity for operation in high temperatures.

1.8. Stainless-steel bearings

For special uses one usually makes ball bearings from high-alloy chromium steel.
These bearings are specially marked with an SS-designation behind the symbol. Stainless-steel 2RS double-sealed bearings are insensitive and resistant to water, steam, alkalies, developers and to a certain extent to acids. The reduction of acid resistance relates to seals made of synthetic rubber in the first place.

1.9. Silent-running bearings

In bearing mountings, from which a very low level of vibration (silent running) is demanded, P66 EMQ bearings in several dimension series are implemented, whereas 608 ZZ and 608 2RS bearings in the ABEC1, ABEC3, ABEC5, ABEC7 makings (with substantially increased rotational and noise parameters) are implemented in skateboards and roller-blades. The American marking system corresponds approximately the following markings: ABEC1 – somewhere between P0 and P6, ABEC3 – between P6 and P5, ABEC5 – between P5 and P4, ABEC7 – above P4.

1.10. Ball bearings for magnetos

Special variant of radial contact deep-groove ball bearings are ball bearings for magnetos.
Their construction is similar to regular ball bearings, they only differ in the construction of their outer ring, which has only one lip, what enables its separate mounting.



Fig.5 Single-row radial contact deep-groove ball bearing, for magnetos

These bearings are used in small electric devices in the first place. Ball bearings for magnetos are made in the Bo…, E…, L…, M… dimension series, standardized for the 30 mm bore diameter, whereas the E-series, the size of which corresponds to the 161-series, is the most common.

1.11. Application

Because of their universal features, very simple construction, easiness of mounting and dismounting and low cost,

https://nppnovoteh.com

the radial contact deep-groove ball bearings find application in all branches of industry. They nearly dominated the market for miniature bearings. Rotationlal speed in the range of a few hundred thousand revolutions per minute is quite normal for miniature ball bearings. Advanced technology makes it possible to produce a ball bearing with outside diameter of only 1 mm.

https://nppnovoteh.com

1. RADIAL CONTACT DEEP-GROOVE BALL BEARINGS

1.1 Single-row deep-groove ball bearings - miniature (1 mm - 9 mm)



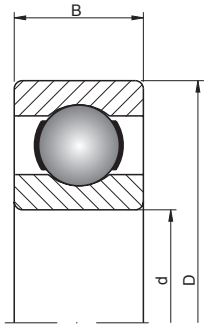

16.. 6..

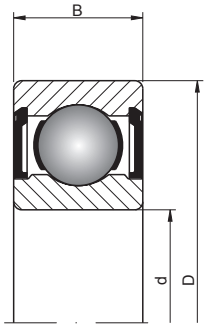

ZZ

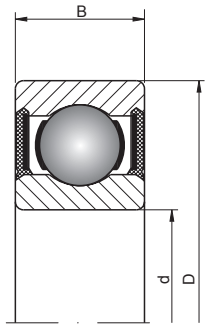

2RS

1 – 2,5 mm

Shaft [mm]	Bearing No.	Series		Dimensions [mm]				Weight [kg]	Basic load ratings [kN]	
		SD	SB	d	D	Df	B		dyn. C	stat. C_0
1	**618/1**	8	0	1	3	-	1,000	0,00005	0,08	0,022
	618/1 2RS	8	0	1	3	-	1,500	0,00005	0,08	0,022
	FL618/1	8	0	1	3	3,8	1,000	0,00006	0,08	0,022
	618/1 ZZ	8	0	1	3	-	1,500	0,00005	0,08	0,022
	FL618/1 ZZ	8	0	1	3	3,8	1,500	0,00006	0,08	0,022
	619/1	9	0	1	4	-	1,600	0,00011	0,157	0,043
	619/1 2RS	9	0	1	4	-	2,300	0,00011	0,157	0,043
	FL619/1	9	0	1	4	5	1,600	0,00014	0,157	0,043
	619/1 ZZ	9	0	1	4	-	2,300	0,00011	0,157	0,043
	FL619/1 ZZ	9	0	1	4	5	2,300	0,00014	0,157	0,043
1,5	**618/1,5**	8	0	1,5	4	-	1,200	0,00007	0,102	0,029
	618/1,5 2RS	8	0	1,5	4	-	2,000	0,00007	0,102	0,029
	FL618/1,5	8	0	1,5	4	5	1,200	0,00009	0,102	0,029
	618/1,5 ZZ	8	0	1,5	4	-	2,000	0,00007	0,102	0,029
	FL618/1,5 ZZ	8	0	1,5	4	5	2,000	0,00009	0,102	0,029
	619/1,5	9	0	1,5	5	-	2,000	0,00018	0,237	0,068
	619/1,5 2RS	9	0	1,5	5	-	2,600	0,00018	0,237	0,068
	FL619/1,5	9	0	1,5	5	6,5	2,000	0,00024	0,237	0,068
	619/1,5 ZZ	9	0	1,5	5	-	2,600	0,00018	0,237	0,068
	FL619/1,5 ZZ	9	0	1,5	5	6,5	2,600	0,00024	0,237	0,068
	60/1,5	0	0	1,5	6	-	2,500	0,00035	0,274	0,086
	60/1,5 2RS	0	0	1,5	6	-	3,000	0,00035	0,274	0,086
	FL60/1,5	0	0	1,5	6	7,5	2,500	0,00042	0,274	0,086
	60/1,5 ZZ	0	0	1,5	6	-	3,000	0,00035	0,274	0,086
	FL60/1,5 ZZ	0	0	1,5	6	7,5	3,000	0,00042	0,274	0,086
2	**617/2**	7	0	2	4	-	1,200	0,00006	0,171	0,051
	617/2 ZZ	7	0	2	4	-	2,000	0,00006	0,104	0,037
	618/2	8	0	2	5	-	1,500	0,00013	0,171	0,051
	618/2 2RS	8	0	2	5	-	2,300	0,00013	0,171	0,051
	FL618/2	8	0	2	5	6,1	1,500	0,00017	0,171	0,051
	618/2 ZZ	8	0	2	5	-	2,300	0,00013	0,171	0,051
	FL618/2 ZZ	8	0	2	5	6,1	2,300	0,00017	0,171	0,051
	619/2	9	0	2	6	-	2,300	0,00031	0,279	0,089
	619/2 2RS	9	0	2	6	-	3,000	0,00031	0,279	0,089
	FL619/2	9	0	2	6	7,5	2,300	0,00038	0,279	0,089
	619/2 ZZ	9	0	2	6	-	3,000	0,00031	0,279	0,089
	FL619/2 ZZ	9	0	2	6	7,5	3,000	0,00038	0,279	0,089
	602	0	0	2	7	-	2,800	0,00054	0,38	0,125
	602 2RS	0	0	2	7	-	3,500	0,00054	0,38	0,125
	617/2 2RS	7	0	2	7	-	2,800	0,00006	0,38	0,125
	FL602	0	0	2	7	8,5	2,800	0,00064	0,38	0,125
	602 ZZ	0	0	2	7	-	3,500	0,00054	0,38	0,125
	FL602 ZZ	0	0	2	7	8,5	3,500	0,00064	0,38	0,125
2,5	**617/2,5**	7	0	2,5	5	-	1,500	0,00011	0,153	0,059
	617/2,5 2RS	7	0	2,5	5	-	1,500	0,00011	0,153	0,059
	617/2,5 ZZ	7	0	2,5	5	-	2,300	0,00011	0,153	0,059
	618/2,5	8	0	2,5	6	-	1,800	0,00022	0,209	0,073
	618/2,5 2RS	8	0	2,5	6	-	2,600	0,00022	0,209	0,073
	FL618/2,5	8	0	2,5	6	7,1	1,800	0,00026	0,209	0,073
	618/2,5 ZZ	8	0	2,5	6	-	2,600	0,00022	0,209	0,073
	FL618/2,5 ZZ	8	0	2,5	6	7,1	2,600	0,00026	0,209	0,073
	619/2,5	9	0	2,5	7	-	2,500	0,00043	0,284	0,096
	619/2,5 2RS	9	0	2,5	7	-	3,500	0,00043	0,284	0,096

- warehouse - order - phone

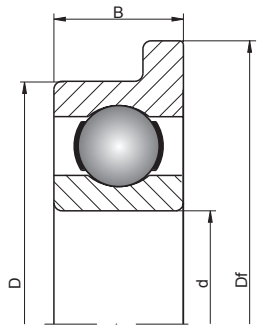

16.. 6..

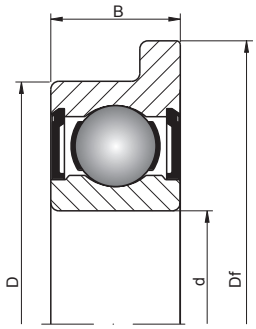

ZZ

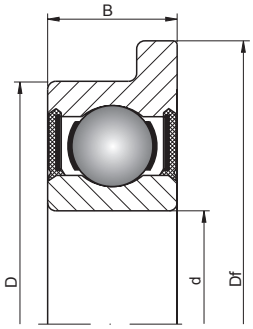

2RS

Limiting speed [rpm]		Basic makes*							Bearing No.
grease	oil	-	C3	P66	RS	Z	ZRS	SS	
120000	140000	◴	✓	✓	-	-	-	✓	**618/1**
120000	-	◴	✓	✓	◴	-	-	✓	**618/1 2RS**
120000	140000	◴	✓	✓	-	-	-	✓	**FL618/1**
120000	140000	◴	✓	✓	-	◴	✓	✓	**618/1 ZZ**
120000	140000	◴	✓	✓	-	◴	✓	✓	**FL618/1 ZZ**
96000	110000	◴	✓	✓	-	-	-	✓	**619/1**
96000	-	◴	✓	✓	◴	-	-	✓	**619/1 2RS**
96000	110000	◴	✓	✓	-	-	-	✓	**FL619/1**
96000	110000	◴	✓	✓	-	◴	✓	✓	**619/1 ZZ**
96000	110000	◴	✓	✓	-	◴	✓	✓	**FL619/1 ZZ**
88000	100000	◴	✓	✓	-	-	-	✓	**618/1,5**
88000	-	◴	✓	✓	◴	-	-	✓	**618/1,5 2RS**
88000	100000	◴	✓	✓	-	-	-	✓	**FL618/1,5**
88000	100000	◴	✓	✓	-	◴	✓	✓	**618/1,5 ZZ**
88000	100000	◴	✓	✓	-	◴	✓	✓	**FL618/1,5 ZZ**
79000	93000	◴	✓	✓	-	-	-	✓	**619/1,5**
79000	-	◴	✓	✓	◴	-	-	✓	**619/1,5 2RS**
79000	93000	◴	✓	✓	-	-	-	✓	**FL619/1,5**
79000	93000	◴	✓	✓	-	◴	✓	✓	**619/1,5 ZZ**
79000	93000	◴	✓	✓	-	◴	✓	✓	**FL619/1,5 ZZ**
71000	84000	◴	✓	✓	-	-	-	✓	**60/1,5**
71000	-	◴	✓	✓	◴	-	-	✓	**60/1,5 2RS**
71000	84000	◴	✓	✓	-	-	-	✓	**FL60/1,5**
71000	84000	◴	✓	✓	-	◴	✓	✓	**60/1,5 ZZ**
71000	84000	◴	✓	✓	-	◴	✓	✓	**FL60/1,5 ZZ**
74000	87000	◴	✓	✓	-	-	-	✓	**617/2**
83000	98000	◴	✓	✓	-	◴	✓	✓	**617/2 ZZ**
74000	87000	◴	✓	✓	-	-	-	✓	**618/2**
74000	-	◴	✓	✓	◴	-	-	✓	**618/2 2RS**
74000	87000	◴	✓	✓	-	-	-	✓	**FL618/2**
74000	87000	◴	✓	✓	-	◴	✓	✓	**618/2 ZZ**
74000	87000	◴	✓	✓	-	◴	✓	✓	**FL618/2 ZZ**
67000	79000	◴	✓	✓	-	-	-	✓	**619/2**
67000	-	◴	✓	✓	◴	-	-	✓	**619/2 2RS**
67000	79000	◴	✓	✓	-	-	-	✓	**FL619/2**
67000	79000	◴	✓	✓	-	◴	✓	✓	**619/2 ZZ**
67000	79000	◴	✓	✓	-	◴	✓	✓	**FL619/2 ZZ**
62000	73000	◴	✓	✓	-	-	-	✓	**602**
62000	-	◴	✓	✓	◴	-	-	✓	**602 2RS**
62000	-	◴	✓	✓	◴	-	-	✓	**617/2 2RS**
62000	73000	◴	✓	✓	-	-	-	✓	**FL602**
62000	73000	◴	✓	✓	-	◴	✓	✓	**602 ZZ**
62000	73000	◴	✓	✓	-	◴	✓	✓	**FL602 ZZ**
70000	82000	◴	✓	✓	-	-	-	✓	**617/2,5**
70000	-	◴	✓	✓	◴	-	-	✓	**617/2,5 2RS**
70000	82000	◴	✓	✓	-	◴	✓	✓	**617/2,5 ZZ**
65000	76000	◴	✓	✓	-	-	-	✓	**618/2,5**
65000	-	◴	✓	✓	◴	-	-	✓	**618/2,5 2RS**
65000	76000	◴	✓	✓	-	-	-	✓	**FL618/2,5**
65000	76000	◴	✓	✓	-	◴	✓	✓	**618/2,5 ZZ**
65000	76000	◴	✓	✓	-	◴	✓	✓	**FL618/2,5 ZZ**
59000	70000	◴	✓	✓	-	-	-	✓	**619/2,5**
59000	-	◴	✓	✓	◴	-	-	✓	**619/2,5 2RS**

* Other products also available

https://nppnovoteh.com

1. RADIAL CONTACT DEEP-GROOVE BALL BEARINGS

1.1 Single-row deep-groove ball bearings - miniature (1 mm - 9 mm)



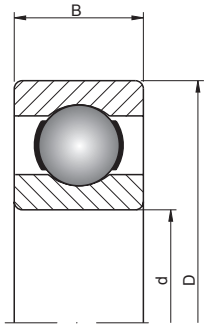

16.. 6..

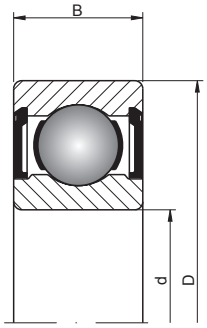

ZZ

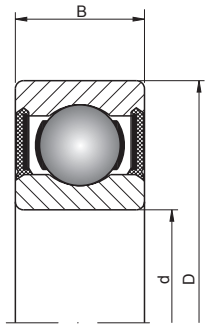

2RS

2,5 – 4 mm

Shaft [mm]	Bearing No.	Series		Dimensions [mm]				Weight [kg]	Basic load ratings [kN]	
		SD	SB	d	D	Df	B		dyn. C	stat. C_0
2,5 cont.	**FL619/2,5**	9	0	2,5	7	8,5	2,500	0,00053	0,284	0,096
	619/2,5 ZZ	9	0	2,5	7	-	3,500	0,00043	0,284	0,096
	FL619/2,5 ZZ	9	0	2,5	7	8,5	3,500	0,00053	0,284	0,096
	60/2,5	0	0	2,5	8	-	2,800	0,00072	0,55	0,174
	60/2,5 2RS	0	0	2,5	8	-	4,000	0,00072	0,55	0,174
	FL60/2,5	0	0	2,5	8	9,5	2,800	0,00083	0,55	0,174
	60/2,5 ZZ	0	0	2,5	8	-	4,000	0,00072	0,55	0,174
	FL60/2,5 ZZ	0	0	2,5	8	9,5	4,000	0,00083	0,55	0,174
3	**617/3**	7	0	3	6	-	2,000	0,00020	0,242	0,094
	617/3 2RS	7	0	3	6	-	2,000	0,00020	0,242	0,094
	FL617/3	7	0	3	6	7,2	2,000	0,00026	0,39	0,13
	617/3 ZZ	7	0	3	6	-	2,500	0,00020	0,242	0,094
	FL617/3 ZZ	7	0	3	6	7,2	2,500	0,00026	0,242	0,094
	618/3	8	0	3	7	-	2,000	0,00031	0,39	0,13
	618/3 2RS	8	0	3	7	-	3,000	0,00031	0,39	0,13
	FL618/3	8	0	3	7	8,1	2,000	0,00031	0,39	0,13
	618/3 ZZ	8	0	3	7	-	3,000	0,00031	0,39	0,13
	FL618/3 ZZ	8	0	3	7	8,1	3,000	0,00031	0,39	0,13
	619/3	9	0	3	8	-	3,000	0,00059	0,56	0,18
	619/3 2RS	9	0	3	8	-	4,000	0,00059	0,56	0,18
	FL619/3	9	0	3	8	9,5	3,000	0,00059	0,56	0,18
	619/3 ZZ	9	0	3	8	-	4,000	0,00059	0,56	0,18
	FL619/3 ZZ	9	0	3	8	9,5	4,000	0,00059	0,56	0,18
	603	0	0	3	9	-	3,000	0,00092	0,635	0,219
	603 2RS	0	0	3	9	-	5,000	0,00092	0,635	0,219
	FL603	0	0	3	9	10,5	3,000	0,00100	0,635	0,219
	603 ZZ	0	0	3	9	-	5,000	0,00092	0,635	0,219
	FL603 ZZ	0	0	3	9	10,5	5,000	0,00100	0,635	0,219
	623	2	0	3	10	-	4,000	0,00150	0,488	0,146
	623 2RS	2	0	3	10	-	4,000	0,00150	0,488	0,146
	623 ZZ	2	0	3	10	-	4,000	0,00150	0,488	0,146
	FL623	2	0	3	10	11,5	4,000	0,00150	0,488	0,146
	FL623 ZZ	2	0	3	10	11,5	4,000	0,00150	0,488	0,146
4	**617/4**	7	0	4	7	-	2,000	0,00028	0,269	0,117
	617/4 2RS	7	0	4	7	-	2,000	0,00028	0,269	0,117
	FL617/4	7	0	4	7	8,2	2,000	0,00035	0,269	0,117
	617/4 ZZ	7	0	4	7	-	2,500	0,00028	0,269	0,117
	FL617/4 ZZ	7	0	4	7	8,2	2,500	0,00035	0,269	0,117
	618/4	8	0	4	9	-	2,500	0,00070	0,54	0,18
	618/4 2RS	8	0	4	9	-	4,000	0,00070	0,54	0,18
	FL618/4	8	0	4	9	10,3	2,500	0,00070	0,54	0,18
	628/4 ZZ	8	2	4	9	-	3,500	0,00100	0,54	0,216
	618/4 ZZ	8	0	4	9	-	4,000	0,00070	0,54	0,18
	FL618/4 ZZ	8	0	4	9	10,3	4,000	0,00070	0,54	0,18
	619/4	9	0	4	11	-	4,000	0,00167	0,715	0,276
	619/4 2RS	9	0	4	11	-	4,000	0,00167	0,715	0,276
	619/4 ZZ	9	0	4	11	-	4,000	0,00167	0,715	0,276
	FL619/4	9	0	4	11	12,5	4,000	0,00167	0,715	0,276
	FL619/4 ZZ	9	0	4	11	12,5	4,000	0,00167	0,715	0,276
	604	0	0	4	12	-	4,000	0,00210	0,97	0,36
	604 2RS	0	0	4	12	-	4,000	0,00210	0,806	0,28
	604 ZZ	0	0	4	12	-	4,000	0,00220	0,806	0,28
	FL604	0	0	4	12	13,5	4,000	0,00220	0,806	0,28
	FL604 ZZ	0	0	4	12	13,5	4,000	0,00220	0,806	0,28

- warehouse - order - phone

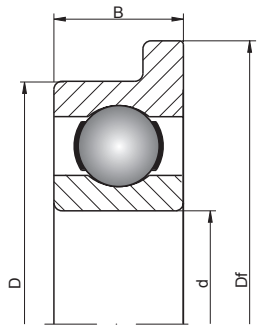

16.. 6..

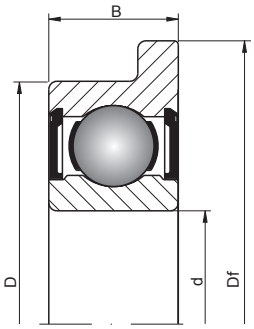

ZZ

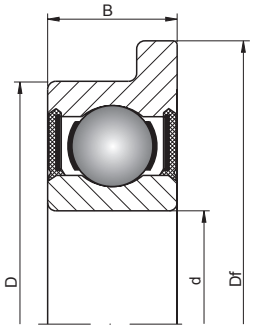

2RS

Limiting speed [rpm]		Basic makes*							Bearing No.
grease	oil	-	C3	P66	RS	Z	ZRS	SS	
59000	70000	◴	◥	◥	-	-	-	◥	**FL619/2,5**
59000	70000	◴	◥	◥	-	◴	◥	◥	**619/2,5 ZZ**
59000	70000	◴	◥	◥	-	◴	◥	◥	**FL619/2,5 ZZ**
56000	66000	◴	◥	◥	-	-	-	◥	**60/2,5**
56000	-	◴	◥	◥	◴	-	-	◥	**60/2,5 2RS**
56000	66000	◴	◥	◥	-	-	-	◥	**FL60/2,5**
56000	66000	◴	◥	◥	-	◴	◥	◥	**60/2,5 ZZ**
56000	66000	◴	◥	◥	-	◴	◥	◥	**FL60/2,5 ZZ**
60000	71000	◴	◥	◥	-	-	-	◥	**617/3**
60000	-	◴	◥	◥	◴	-	-	◥	**617/3 2RS**
58000	68000	◴	◥	◥	-	-	-	◥	**FL617/3**
60000	71000	◴	◥	◥	-	◴	◥	◥	**617/3 ZZ**
60000	71000	◴	◥	◥	-	◴	◥	◥	**FL617/3 ZZ**
58000	68000	■	◴	◴	-	-	-	◴	**618/3**
58000	-	■	◴	◴	■	-	-	◴	**618/3 2RS**
58000	68000	◴	◥	◥	-	-	-	◥	**FL618/3**
58000	68000	■	◴	◴	-	■	◴	◴	**618/3 ZZ**
58000	68000	◴	◥	◥	-	◴	◥	◥	**FL618/3 ZZ**
54000	63000	■	◴	◴	-	-	-	◴	**619/3**
54000	-	■	◴	◴	■	-	-	◴	**619/3 2RS**
54000	63000	◴	◥	◥	-	-	-	◥	**FL619/3**
54000	63000	■	◴	◴	-	■	◴	◴	**619/3 ZZ**
54000	63000	◴	◥	◥	-	◴	◥	◥	**FL619/3 ZZ**
50000	59000	■	◴	◴	-	-	-	◴	**603**
50000	-	■	◴	◴	■	-	-	◴	**603 2RS**
50000	59000	◴	◥	◥	-	-	-	◥	**FL603**
50000	59000	■	◴	◴	-	■	◴	◴	**603 ZZ**
50000	59000	◴	◥	◥	-	◴	◥	◥	**FL603 ZZ**
50000	58000	■	■	■	-	-	-	■	**623**
50000	-	■	◴	◴	■	-	-	◴	**623 2RS**
50000	58000	■	◴	◴	-	■	◴	◴	**623 ZZ**
50000	58000	◴	◥	◥	-	-	-	◥	**FL623**
50000	58000	◴	◥	◥	-	◴	◥	◥	**FL623 ZZ**
54000	63000	◴	◥	◥	-	-	-	◥	**617/4**
54000	-	◴	◥	◥	◴	-	-	◥	**617/4 2RS**
54000	63000	◴	◥	◥	-	-	-	◥	**FL617/4**
54000	63000	◴	◥	◥	-	◴	◥	◥	**617/4 ZZ**
54000	63000	◴	◥	◥	-	◴	◥	◥	**FL617/4 ZZ**
49000	57000	■	◴	◴	-	-	-	◴	**618/4**
49000	-	■	◴	◴	■	-	-	◴	**618/4 2RS**
49000	57000	◴	◥	◥	-	-	-	◥	**FL618/4**
49000	57000	◴	◥	◥	-	◴	◥	◥	**628/4 ZZ**
49000	57000	■	◴	◴	-	■	◴	◴	**618/4 ZZ**
49000	57000	◴	◥	◥	-	◴	◥	◥	**FL618/4 ZZ**
45000	52000	■	◴	◴	-	-	-	◴	**619/4**
45000	-	■	◴	◴	■	-	-	◴	**619/4 2RS**
45000	52000	■	◴	◴	-	■	◴	◴	**619/4 ZZ**
45000	52000	◴	◥	◥	-	-	-	◥	**FL619/4**
45000	52000	◴	◥	◥	-	◴	◥	◥	**FL619/4 ZZ**
43000	51000	■	◴	◴	-	-	-	◴	**604**
43000	-	■	◴	◴	■	-	-	◴	**604 2RS**
43000	51000	■	◴	◴	-	■	◴	◴	**604 ZZ**
43000	51000	◴	◥	◥	-	-	-	◥	**FL604**
43000	51000	◴	◥	◥	-	◴	◥	◥	**FL604 ZZ**

* Other products also available

https://nppnovoteh.com

1. RADIAL CONTACT DEEP-GROOVE BALL BEARINGS

1.1 Single-row deep-groove ball bearings - miniature (1 mm - 9 mm)



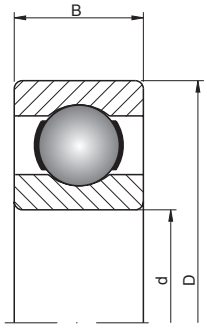

16.. 6..

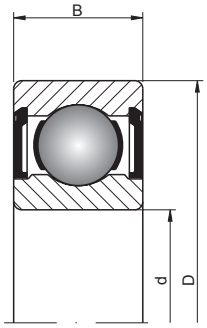

ZZ

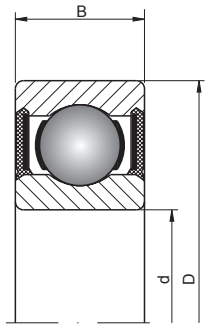

2RS

4 – 6 mm

Shaft [mm]	Bearing No.	Series		Dimensions [mm]				Weight [kg]	Basic load ratings [kN]	
		SD	SB	d	D	Df	B		dyn. C	stat. C_0
4 cont.	**624**	2	0	4	13	-	5,000	0,00310	0,975	0,305
	624 2RS	2	0	4	13	-	5,000	0,00310	0,975	0,305
	624 ZZ	2	0	4	13	-	5,000	0,00310	0,975	0,305
	FL624	2	0	4	13	15	5,000	0,00310	0,975	0,305
	FL624 ZZ	2	0	4	13	15	5,000	0,00310	0,975	0,305
	634	3	0	4	16	-	5,000	0,00540	1,11	0,38
	634 2RS	3	0	4	16	-	5,000	0,00540	1,11	0,38
	634 ZZ	3	0	4	16	-	5,000	0,00540	1,11	0,38
5	**617/5**	7	0	5	8	-	2,000	0,00032	0,292	0,142
	617/5 2RS	7	0	5	8	-	2,000	0,00032	0,292	0,142
	FL617/5	7	0	5	8	9,2	2,000	0,00040	0,292	0,142
	617/5 ZZ	7	0	5	8	-	2,500	0,00032	0,292	0,142
	FL617/5 ZZ	7	0	5	8	9,2	2,500	0,00040	0,292	0,142
	618/5	8	0	5	11	-	3,000	0,00120	0,637	0,255
	618/5 2RS	8	0	5	11	-	5,000	0,00120	0,637	0,255
	FL618/5	8	0	5	11	12,5	3,000	0,00120	0,637	0,255
	628/5 ZZ	8	2	5	11	-	4,000	0,00200	0,64	0,267
	618/5 ZZ	8	0	5	11	-	5,000	0,00120	0,637	0,255
	FL618/5 ZZ	8	0	5	11	12,5	5,000	0,00120	0,637	0,255
	619/5	9	0	5	13	-	4,000	0,00238	1,08	0,43
	619/5 2RS	9	0	5	13	-	4,000	0,00238	1,08	0,43
	619/5 ZZ	9	0	5	13	-	4,000	0,00238	1,08	0,43
	FL619/5	9	0	5	13	15	4,000	0,00238	1,08	0,43
	FL619/5 ZZ	9	0	5	13	15	4,000	0,00238	1,08	0,43
	605	0	0	5	14	-	5,000	0,00346	1,33	0,505
	605 2RS	0	0	5	14	-	5,000	0,00350	1,33	0,505
	605 ZZ	0	0	5	14	-	5,000	0,00346	1,33	0,505
	FL605	0	0	5	14	16	5,000	0,00346	1,33	0,505
	FL605 ZZ	0	0	5	14	16	5,000	0,00346	1,33	0,505
	625	2	0	5	16	-	5,000	0,00500	1,11	0,38
	625 2RS	2	0	5	16	-	5,000	0,00500	1,11	0,38
	625 ZZ	2	0	5	16	-	5,000	0,00500	1,11	0,38
	FL625	2	0	5	16	18	5,000	0,00500	1,11	0,38
	FL625 ZZ	2	0	5	16	18	5,000	0,00500	1,11	0,38
	635	3	0	5	19	-	6,000	0,00900	1,72	0,62
	635 2RS	3	0	5	19	-	6,000	0,00900	1,72	0,62
	635 ZZ	3	0	5	19	-	6,000	0,00900	1,72	0,62
6	**617/6**	7	0	6	10	-	2,500	0,00065	0,53	0,24
	617/6 2RS	7	0	6	10	-	2,500	0,00065	0,53	0,24
	FL617/6	7	0	6	10	11,2	2,500	0,00074	0,53	0,24
	617/6 ZZ	7	0	6	10	-	3,000	0,00065	0,53	0,24
	FL617/6 ZZ	7	0	6	10	11,2	3,000	0,00074	0,53	0,24
	618/6	8	0	6	13	-	3,500	0,00200	0,884	0,345
	618/6 2RS	8	0	6	13	-	5,000	0,00200	0,884	0,345
	FL618/6	8	0	6	13	15	3,500	0,00200	0,884	0,345
	618/6 ZZ	8	0	6	13	-	5,000	0,00200	0,884	0,345
	628/6 ZZ	8	2	6	13	-	5,000	0,00300	0,88	0,383
	FL618/6 ZZ	8	0	6	13	15	5,000	0,00200	0,884	0,345
	619/6	9	0	6	15	-	5,000	0,00379	1,35	0,53
	619/6 2RS	9	0	6	15	-	5,000	0,00379	1,35	0,53
	619/6 ZZ	9	0	6	15	-	5,000	0,00379	1,35	0,53
	FL619/6	9	0	6	15	17	5,000	0,00379	1,35	0,53
	FL619/6 ZZ	9	0	6	15	17	5,000	0,00379	1,35	0,53
	606	0	0	6	17	-	6,000	0,00594	2,19	0,865

- warehouse - order - phone

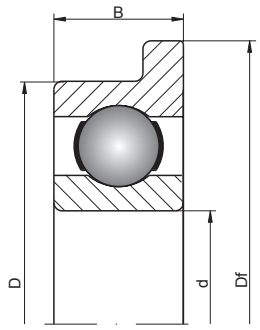

16.. 6..

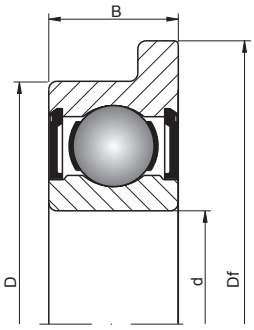

ZZ

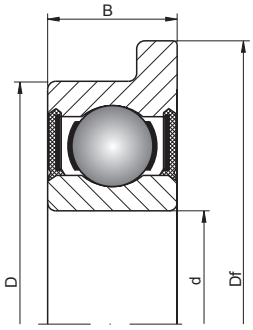

2RS

Limiting speed [rpm]		Basic makes*							Bearing No.
grease	oil	-	C3	P66	RS	Z	ZRS	SS	
42000	49000	●	◴	◴	-	-	-	◴	**624**
42000	-	●	◴	◴	●	-	-	◴	**624 2RS**
42000	49000	●	◴	◴	-	●	◴	◴	**624 ZZ**
42000	49000	◴	◥	◥	-	-	-	◥	**FL624**
42000	49000	◴	◥	◥	-	◴	◥	◥	**FL624 ZZ**
37000	44000	●	◴	◴	-	-	-	◴	**634**
37000	-	●	◴	◴	●	-	-	◴	**634 2RS**
37000	44000	●	◴	◴	-	●	◴	◴	**634 ZZ**
49000	57000	◴	◥	◥	-	-	-	◥	**617/5**
49000	-	◴	◥	◥	◴	-	-	◥	**617/5 2RS**
49000	57000	◴	◥	◥	-	-	-	◥	**FL617/5**
49000	57000	◴	◥	◥	-	◴	◥	◥	**617/5 ZZ**
49000	57000	◴	◥	◥	-	◴	◥	◥	**FL617/5 ZZ**
43000	51000	●	◴	◴	-	-	-	◴	**618/5**
43000	-	●	◴	◴	●	-	-	◴	**618/5 2RS**
43000	51000	◴	◥	◥	-	-	-	◥	**FL618/5**
43000	51000	◴	◥	◥	-	◴	◥	◥	**628/5 ZZ**
43000	51000	●	◴	◴	-	●	◴	◴	**618/5 ZZ**
43000	51000	◴	◥	◥	-	◴	◥	◥	**FL618/5 ZZ**
40000	47000	●	◴	◴	-	-	-	◴	**619/5**
40000	-	●	◴	◴	●	-	-	◴	**619/5 2RS**
40000	47000	●	◴	◴	-	●	◴	◴	**619/5 ZZ**
40000	47000	◴	◥	◥	-	-	-	◥	**FL619/5**
40000	47000	◴	◥	◥	-	◴	◥	◥	**FL619/5 ZZ**
39000	46000	●	◴	◴	-	-	-	◴	**605**
39000	-	●	◴	◴	●	-	-	◴	**605 2RS**
39000	46000	●	◴	◴	-	●	◴	◴	**605 ZZ**
39000	46000	◴	◥	◥	-	-	-	◥	**FL605**
39000	46000	◴	◥	◥	-	◴	◥	◥	**FL605 ZZ**
37000	44000	●	◴	◴	-	-	-	◴	**625**
37000	-	●	◴	◴	●	-	-	◴	**625 2RS**
37000	44000	●	◴	◴	-	●	◴	◴	**625 ZZ**
37000	44000	◴	◥	◥	-	-	-	◥	**FL625**
37000	44000	◴	◥	◥	-	◴	◥	◥	**FL625 ZZ**
34000	40000	●	◴	◴	-	-	-	◴	**635**
34000	-	●	◴	◴	●	-	-	◴	**635 2RS**
34000	40000	●	◴	◴	-	●	◴	◴	**635 ZZ**
43000	51000	◴	◥	◥	-	-	-	◥	**617/6**
43000	-	◴	◥	◥	◴	-	-	◥	**617/6 2RS**
43000	51000	◴	◥	◥	-	-	-	◥	**FL617/6**
43000	51000	◴	◥	◥	-	◴	◥	◥	**617/6 ZZ**
43000	51000	◴	◥	◥	-	◴	◥	◥	**FL617/6 ZZ**
39000	46000	●	◴	◴	-	-	-	◴	**618/6**
39000	-	●	◴	◴	●	-	-	◴	**618/6 2RS**
39000	46000	◴	◥	◥	-	-	-	◥	**FL618/6**
39000	46000	●	◴	◴	-	●	◴	◴	**618/6 ZZ**
39000	46000	◴	◥	◥	-	◴	◥	◥	**628/6 ZZ**
39000	46000	◴	◥	◥	-	◴	◥	◥	**FL618/6 ZZ**
37000	44000	●	◴	◴	-	-	-	◴	**619/6**
37000	-	●	◴	◴	●	-	-	◴	**619/6 2RS**
37000	44000	●	◴	◴	-	●	◴	◴	**619/6 ZZ**
37000	44000	◴	◥	◥	-	-	-	◥	**FL619/6**
37000	44000	◴	◥	◥	-	◴	◥	◥	**FL619/6 ZZ**
35000	42000	●	◴	◴	-	-	-	◴	**606**

* Other products also available

https://nppnovoteh.com

1. RADIAL CONTACT DEEP-GROOVE BALL BEARINGS

1.1 Single-row deep-groove ball bearings - miniature (1 mm - 9 mm)



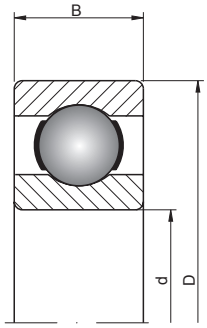

16.. 6..

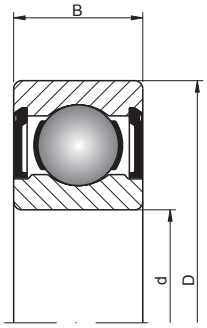

ZZ

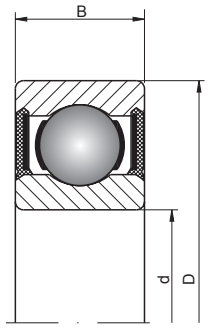

2RS

6 – 8 mm

Shaft [mm]	Bearing No.	Series		Dimensions [mm]				Weight [kg]	Basic load ratings [kN]	
		SD	SB	d	D	Df	B		dyn. C	stat. C_0
6 cont.	**606 2RS**	0	0	6	17	-	6,000	0,00600	2,19	0,865
	606 ZZ	0	0	6	17	-	6,000	0,00594	2,19	0,865
	FL606	0	0	6	17	19	6,000	0,00594	2,19	0,865
	FL606 ZZ	0	0	6	17	19	6,000	0,00594	2,19	0,865
	626	2	0	6	19	-	6,000	0,00840	1,72	0,62
	626 2RS	2	0	6	19	-	6,000	0,00840	1,72	0,62
	626 ZZ	2	0	6	19	-	6,000	0,00840	1,72	0,62
	FL626	2	0	6	19	22	6,000	0,00840	1,72	0,62
	FL626 ZZ	2	0	6	19	22	6,000	0,00840	1,72	0,62
7	**617/7**	7	0	7	11	-	2,500	0,00067	0,555	0,269
	617/7 2RS	7	0	7	11	-	2,500	0,00067	0,555	0,269
	FL617/7	7	0	7	11	12,2	2,500	0,00077	0,555	0,269
	617/7 ZZ	7	0	7	11	-	3,000	0,00067	0,555	0,269
	FL617/7 ZZ	7	0	7	11	12,2	3,000	0,00077	0,555	0,269
	618/7	8	0	7	14	-	3,500	0,00220	0,956	0,4
	618/7 2RS	8	0	7	14	-	3,500	0,00220	0,956	0,4
	FL618/7	8	0	7	14	16	3,500	0,00220	0,956	0,4
	618/7 ZZ	8	0	7	14	-	5,000	0,00220	0,956	0,4
	628/7 ZZ	8	2	7	14	-	5,000	0,00300	0,96	0,436
	FL618/7 ZZ	8	0	7	14	16	5,000	0,00220	0,956	0,4
	619/7	9	0	7	17	-	5,000	0,00526	1,61	0,715
	619/7 2RS	9	0	7	17	-	5,000	0,00526	1,61	0,715
	619/7 ZZ	9	0	7	17	-	5,000	0,00526	1,61	0,715
	FL619/7	9	0	7	17	19	5,000	0,00526	1,61	0,715
	FL619/7 ZZ	9	0	7	17	19	5,000	0,00526	1,61	0,715
	607	0	0	7	19	-	6,000	0,00750	1,72	0,62
	607 2RS	0	0	7	19	-	6,000	0,00800	1,72	0,62
	607 ZZ	0	0	7	19	-	6,000	0,00750	1,72	0,62
	627	2	0	7	22	-	7,000	0,01300	3,25	1,37
	627 2RS	2	0	7	22	-	7,000	0,01300	3,25	1,37
	627 ZZ	2	0	7	22	-	7,000	0,01300	3,25	1,37
8	**617/8**	7	0	8	12	-	2,500	0,00075	0,575	0,298
	617/8 2RS	7	0	8	12	-	2,500	0,00075	0,575	0,298
	FL617/8	7	0	8	12	13,2	2,500	0,00086	0,575	0,298
	617/8 ZZ	7	0	8	12	-	3,500	0,00075	0,575	0,298
	FL617/8 ZZ	7	0	8	12	13,6	3,500	0,00086	0,575	0,298
	618/8	8	0	8	16	-	4,000	0,00300	1,33	0,57
	618/8 2RS	8	0	8	16	-	4,000	0,00300	1,33	0,57
	FL618/8	8	0	8	16	18	4,000	0,00300	1,33	0,57
	618/8 ZZ	8	0	8	16	-	5,000	0,00300	1,33	0,57
	628/8 ZZ	8	2	8	16	-	5,000	0,00400	1,33	0,633
	FL618/8 ZZ	8	0	8	16	18	5,000	0,00300	1,33	0,57
	619/8	9	0	8	19	-	6,000	0,00709	1,99	0,865
	619/8 2RS	9	0	8	19	-	6,000	0,00709	1,99	0,865
	619/8 ZZ	9	0	8	19	-	6,000	0,00709	1,99	0,865
	FL619/8	9	0	8	19	22	6,000	0,00709	1,99	0,865
	FL619/8 ZZ	9	0	8	19	22	6,000	0,00709	1,99	0,865
	608	0	0	8	22	-	7,000	0,01200	3,25	1,37
	608 2RS	0	0	8	22	-	7,000	0,01200	3,25	1,37
	608 ZZ	0	0	8	22	-	7,000	0,01200	3,25	1,37
	FL608	0	0	8	22	25	7,000	0,01200	3,25	1,37
	FL608 ZZ	0	0	8	22	25	7,000	0,01200	3,25	1,37
	628	2	0	8	24	-	8,000	0,01700	4	1,59
	628 2RS	2	0	8	24	-	8,000	0,01700	4	1,59

- warehouse - order - phone

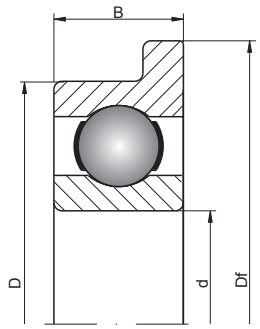

16.. 6..

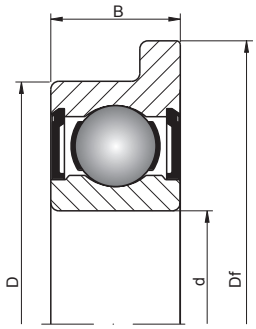

ZZ

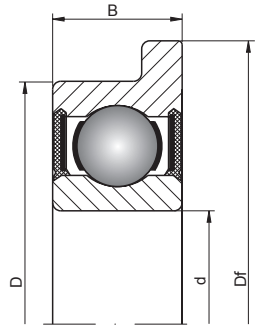

2RS

Limiting speed [rpm]		Basic makes*							Bearing No.
grease	oil	-	C3	P66	RS	Z	ZRS	SS	
35000	-	●	◴	◴	●	-	-	◴	**606 2RS**
35000	42000	●	◴	◴	-	●	◴	◴	**606 ZZ**
35000	42000	◴	◝	◝	-	-	-	◝	**FL606**
35000	42000	◴	◝	◝	-	◴	◝	◝	**FL606 ZZ**
34000	40000	●	●	●	-	-	-	●	**626**
34000	-	●	●	●	●	-	-	●	**626 2RS**
34000	40000	●	●	●	-	●	◴	●	**626 ZZ**
34000	40000	◴	◝	◝	-	-	-	◝	**FL626**
34000	40000	◴	◝	◝	-	◴	◝	◝	**FL626 ZZ**
40000	47000	◴	◝	◝	-	-	-	◝	**617/7**
40000	-	◴	◝	◝	◴	-	-	◝	**617/7 2RS**
40000	47000	◴	◝	◝	-	-	-	◝	**FL617/7**
40000	47000	◴	◝	◝	-	◴	◝	◝	**617/7 ZZ**
40000	47000	◴	◝	◝	-	◴	◝	◝	**FL617/7 ZZ**
37000	44000	●	◴	◴	-	-	-	◴	**618/7**
37000	-	●	◴	◴	●	-	-	◴	**618/7 2RS**
37000	44000	◴	◝	◝	-	-	-	◝	**FL618/7**
37000	44000	●	◴	◴	-	●	◴	◴	**618/7 ZZ**
37000	44000	◴	◝	◝	-	◴	◝	◝	**628/7 ZZ**
37000	44000	◴	◝	◝	-	◴	◝	◝	**FL618/7 ZZ**
35000	41000	●	◴	◴	-	-	-	◴	**619/7**
35000	-	●	◴	◴	●	-	-	◴	**619/7 2RS**
35000	41000	●	◴	◴	-	●	◴	◴	**619/7 ZZ**
35000	41000	◴	◝	◝	-	-	-	◝	**FL619/7**
35000	41000	◴	◝	◝	-	◴	◝	◝	**FL619/7 ZZ**
34000	40000	●	●	●	-	-	-	◴	**607**
34000	-	●	●	●	●	-	-	●	**607 2RS**
34000	40000	●	●	●	-	●	◴	●	**607 ZZ**
32000	37000	●	●	●	-	-	-	●	**627**
32000	-	●	●	●	●	-	-	●	**627 2RS**
32000	37000	●	●	●	-	●	◴	●	**627 ZZ**
38000	45000	◴	◝	◝	-	-	-	◝	**617/8**
38000	-	◴	◝	◝	◴	-	-	◝	**617/8 2RS**
38000	45000	◴	◝	◝	-	-	-	◝	**FL617/8**
38000	45000	◴	◝	◝	-	◴	◝	◝	**617/8 ZZ**
38000	45000	◴	◝	◝	-	◴	◝	◝	**FL617/8 ZZ**
35000	41000	●	◴	◴	-	-	-	◴	**618/8**
35000	-	●	◴	◴	●	-	-	◴	**618/8 2RS**
35000	41000	◴	◝	◝	-	-	-	◝	**FL618/8**
35000	41000	●	◴	◴	-	●	◴	◴	**618/8 ZZ**
35000	41000	◴	◝	◝	-	◴	◝	◝	**628/8 ZZ**
35000	41000	◴	◝	◝	-	◴	◝	◝	**FL618/8 ZZ**
33000	39000	●	◴	◴	-	-	-	◴	**619/8**
33000	-	●	◴	◴	●	-	-	◴	**619/8 2RS**
33000	39000	●	◴	◴	-	●	◴	◴	**619/8 ZZ**
33000	39000	◴	◝	◝	-	-	-	◝	**FL619/8**
33000	39000	◴	◝	◝	-	◴	◝	◝	**FL619/8 ZZ**
32000	37000	●	●	●	-	-	-	●	**608**
32000	-	●	●	●	●	-	-	●	**608 2RS**
32000	37000	●	●	●	-	●	◴	●	**608 ZZ**
32000	37000	◴	◝	◝	-	-	-	◝	**FL608**
32000	37000	◴	◝	◝	-	◴	◝	◝	**FL608 ZZ**
31000	36000	●	●	●	-	-	-	●	**628**
31000	-	●	●	●	●	-	-	●	**628 2RS**

* Other products also available

https://nppnovoteh.com

1. RADIAL CONTACT DEEP-GROOVE BALL BEARINGS

1.1 Single-row deep-groove ball bearings - miniature (1 mm - 9 mm)



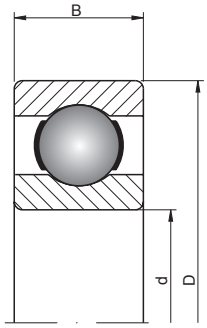

16.. 6..

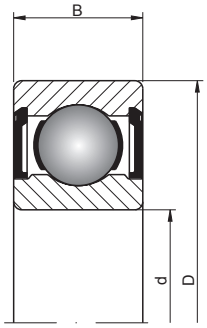

ZZ

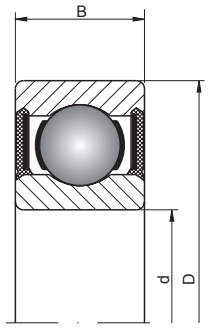

2RS

8 – 9 mm

Shaft [mm]	Bearing No.	Series		Dimensions [mm]				Weight [kg]	Basic load ratings [kN]	
		SD	SB	d	D	Df	B		dyn. C	stat. C_0
8 cont.	**628 ZZ**	2	0	8	24	-	8,000	0,01700	4	1,59
9	**617/9**	7	0	9	14	-	3,000	0,00140	0,92	0,465
	617/9 2RS	7	0	9	14	-	3,000	0,00140	0,92	0,465
	617/9 ZZ	7	0	9	14	-	4,500	0,00140	0,92	0,465
	618/9	8	0	9	17	-	4,000	0,00340	1,43	0,64
	618/9 2RS	8	0	9	17	-	4,000	0,00340	1,43	0,64
	FL618/9	8	0	9	17	19	4,000	0,00340	1,43	0,64
	618/9 ZZ	8	0	9	17	-	5,000	0,00340	1,43	0,64
	628/9 ZZ	8	2	9	17	-	5,000	0,00400	1,43	0,715
	FL618/9 ZZ	8	0	9	17	19	5,000	0,00340	1,43	0,64
	619/9	9	0	9	20	-	6,000	0,00845	2,48	1,09
	619/9 2RS	9	0	9	20	-	6,000	0,00845	2,48	1,09
	619/9 ZZ	9	0	9	20	-	6,000	0,00845	2,48	1,09
	609	0	0	9	24	-	7,000	0,01400	3,71	1,66
	609 2RS	0	0	9	24	-	7,000	0,01400	3,71	1,66
	609 ZZ	0	0	9	24	-	7,000	0,01400	3,71	1,66
	629	2	0	9	26	-	8,000	0,02000	4,62	1,96
	629 2RS	2	0	9	26	-	8,000	0,02000	4,62	1,96
	629 ZZ	2	0	9	26	-	8,000	0,02000	4,62	1,96

- warehouse - order - phone

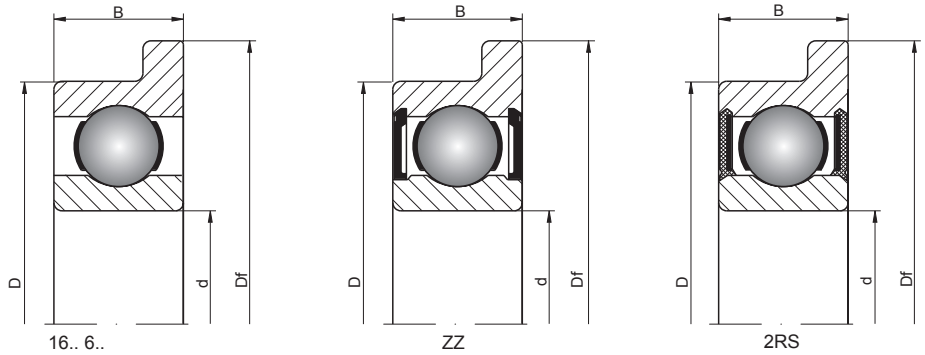

Limiting speed [rpm]		Basic makes*							Bearing No.
grease	oil	-	C3	P66	RS	Z	ZRS	SS	
31000	36000	●	●	●	-	●	◴	●	**628 ZZ**
36000	42000	◴	◝	◝	-	-	-	◝	**617/9**
36000	-	◴	◝	◝	◴	-	-	◝	**617/9 2RS**
36000	42000	◴	◝	◝	-	◴	◝	◝	**617/9 ZZ**
33000	39000	●	◴	◴	-	-	-	◴	**618/9**
33000	-	●	◴	◴	●	-	-	◴	**618/9 2RS**
33000	39000	◴	◝	◝	-	-	-	◝	**FL618/9**
33000	39000	●	◴	◴	-	●	◴	◴	**618/9 ZZ**
33000	39000	◴	◝	◝	-	◴	◝	◝	**628/9 ZZ**
33000	39000	◴	◝	◝	-	◴	◝	◝	**FL618/9 ZZ**
32000	38000	●	◴	◴	-	-	-	◴	**619/9**
32000	-	●	◴	◴	●	-	-	◴	**619/9 2RS**
32000	38000	●	◴	◴	-	●	◴	◴	**619/9 ZZ**
31000	36000	●	●	●	-	-	-	●	**609**
31000	-	●	●	●	●	-	-	●	**609 2RS**
31000	36000	●	●	●	-	●	◴	●	**609 ZZ**
30000	35000	●	●	●	-	-	-	●	**629**
30000	-	●	●	●	●	-	-	●	**629 2RS**
30000	35000	●	●	●	-	●	◴	●	**629 ZZ**

* Other products also available

https://nppnovoteh.com

1. RADIAL CONTACT DEEP-GROOVE BALL BEARINGS

1.2 Single-row deep-groove ball bearings
– dimensions from 10 mm – non-sealed



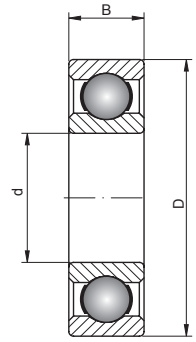

617.. 618.. 628.. 638.. 619..
160.. 60.. 630.. 161.. 62.. 622..
632.. 63..623.. 633.. 64..

10 – 25 mm

Shaft [mm]	Bearing No.	Series		Dimensions [mm]			Weight [kg]	Basic load ratings [kN]	
		SD	SB	d	D	B		dyn. C	stat. C_0
10	**61700**	7	0	10	15	3	0,0015	1,01	0,555
	61800	8	0	10	19	5	0,0055	1,38	0,585
	63800	3	8	10	19	7	0,0250	1,72	0,84
	61900	9	0	10	22	6	0,0100	1,95	0,75
	6000	0	0	10	26	8	0,0190	4,62	1,96
	16100	1	-1	10	28	8	0,0220	4,62	1,96
	6200	2	0	10	30	9	0,0320	5,07	2,36
	6300	3	0	10	35	11	0,0530	8,06	3,4
12	**61701**	7	0	12	18	4	0,0030	1,07	0,655
	61801	8	0	12	21	5	0,0063	1,43	0,67
	63801	3	8	12	21	7	0,0700	1,92	1,035
	61901	9	0	12	24	6	0,0110	2,25	0,98
	16001	0	-1	12	28	7	0,0220	5,1	2,39
	6001	0	0	12	28	8	0,0220	5,07	2,36
	16101	1	-1	12	30	8	0,0230	5,07	2,36
	6201	2	0	12	32	10	0,0370	6,89	3,1
	6301	3	0	12	37	12	0,0600	9,75	4,15
15	**61702**	7	0	15	21	4	0,0035	1,15	0,79
	61802	8	0	15	24	5	0,0074	1,56	0,8
	63802	3	8	15	24	7	0,0700	2,08	1,255
	61902	9	0	15	28	7	0,0160	4,03	2,04
	16002	0	-1	15	32	8	0,0250	5,59	2,85
	6002	0	0	15	32	9	0,0300	5,59	2,85
	6202	2	0	15	35	11	0,0450	7,8	3,75
	6302	3	0	15	42	13	0,0820	11,4	5,4
17	**61703**	7	0	17	23	4	0,0040	1,2	0,865
	61803	8	0	17	26	5	0,0082	1,68	0,93
	63803	3	8	17	26	7	0,0800	2,23	1,45
	61903	9	0	17	30	7	0,0180	4,36	2,32
	16003	0	-1	17	35	8	0,0320	6,05	3,25
	6003	0	0	17	35	10	0,0390	6,05	3,25
	6203	2	0	17	40	12	0,0650	9,56	4,75
	6303	3	0	17	47	14	0,1200	135	6,55
	6403	4	0	17	62	17	0,2700	22,9	10,8
20	**61704**	7	0	20	27	4	0,0050	1,79	1,32
	61804	8	0	20	32	7	0,0180	2,7	1,5
	61904	9	0	20	37	9	0,0380	6,37	3,65
	16004	0	-1	20	42	8	0,0500	6,89	4,05
	6004	0	0	20	42	12	0,0690	9,36	5
	6204	2	0	20	47	14	0,1100	12,7	6,55
	6304	3	0	20	52	15	0,1400	15,9	7,8
	6404	4	0	20	72	19	0,4000	30,7	15
22	**60/22**	0	0	22	44	12	0,0740	9,4	5,15
	62/22	2	0	22	50	14	0,1170	12,9	6,8
	63/22	3	0	22	56	16	0,1760	18,4	9,25
25	**61705**	7	0	25	32	4	0,0060	1,93	1,55
	61805	8	0	25	37	7	0,0220	4,36	2,6
	61905	9	0	25	42	9	0,0450	6,63	4
	16005	0	-1	25	47	8	0,0600	7,61	4,75
	6005	0	0	25	47	12	0,0800	11,2	6,55

- warehouse - order - phone



Limiting speed [rpm]		Basic makes*									Bearing No.
grease	oil	-	M	TN	N	NR	C3	C4	P66	SS	
36000	42000										61700
32000	38000										61800
34000	40800										63800
30000	36000										61900
29000	34000										6000
28000	34000										16100
25000	30000										6200
23000	27000										6300
32000	38000										61701
29000	35000										61801
30500	36600										63801
27000	32000										61901
26000	30000										16001
26000	30000										6001
26000	32000										16101
22000	26000										6201
20000	24000										6301
29000	34000										61702
26000	31000										61802
26000	31500										63802
24000	28000										61902
22000	26000										16002
22000	26000										6002
19000	23000										6202
17000	21000										6302
26000	31000										61703
24000	28000										61803
23000	27600										63803
22000	26000										61903
20000	24000										16003
20000	24000										6003
18000	21000										6203
16000	19000										6303
14000	16000										6403
23000	28000										61704
21000	25000										61804
19000	23000										61904
18000	21000										16004
18000	21000										6004
16000	18000										6204
14000	17000										6304
12000	14000										6404
17000	20000										60/22
14000	17000										62/22
12000	15000										63/22
19000	23000										61705
18000	21000										61805
16000	19000										61905
15000	18000										16005
15000	18000										6005

* Other products also available

https://nppnovoteh.com

1. RADIAL CONTACT DEEP-GROOVE BALL BEARINGS

1.2 Single-row deep-groove ball bearings
– dimensions from 10 mm – non-sealed



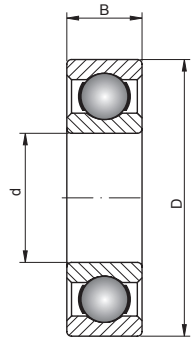

617.. 618.. 628.. 638.. 619..
160.. 60.. 630.. 161.. 62.. 622..
632.. 63..623.. 633.. 64..

25 – 55 mm

Shaft [mm]	Bearing No.	Series		Dimensions [mm]			Weight [kg]	Basic load ratings [kN]	
		SD	SB	d	D	B		dyn. C	stat. C_0
25 cont.	**6205**	2	0	25	52	15	0,1300	14	7,8
	6305	3	0	25	62	17	0,2300	22,5	11,6
	6405	4	0	25	80	21	0,5300	35,8	19,3
28	**60/28**	0	0	28	52	12	0,0980	12,2	7,4
	62/28	2	0	28	58	16	0,1710	17,9	9,75
	63/28	3	0	28	68	18	0,2840	26,7	14
30	**61706**	7	0	30	37	4	0,0080	2,05	1,78
	61806	8	0	30	42	7	0,0270	4,49	2,9
	61906	9	0	30	47	9	0,0510	7,28	4,55
	16006	0	-1	30	55	9	0,0850	11,2	7,35
	6006	0	0	30	55	13	0,1200	13,3	8,3
	6206	2	0	30	62	16	0,2000	19,5	11,2
	6306	3	0	30	72	19	0,3500	28,1	16
	6406	4	0	30	90	23	0,7400	43,6	23,6
32	**60/32**	0	0	32	58	13	0,1290	15,1	9,15
	62/32	2	0	32	65	17	0,2260	20,7	11,6
	63/32	3	0	32	75	20	0,3820	29,8	16,9
35	**61807**	8	0	35	47	7	0,0300	4,75	3,2
	61907	9	0	35	55	10	0,0800	9,56	6,2
	16007	0	-1	35	62	9	0,1100	12,4	8,15
	6007	0	0	35	62	14	0,1600	15,9	10,2
	6207	2	0	35	72	17	0,2900	25,5	15,3
	6307	3	0	35	80	21	0,4600	33,2	19
	6407	4	0	35	100	25	0,9500	55,3	31
40	**61808**	8	0	40	52	7	0,0340	4,94	3,45
	61908	9	0	40	62	12	0,1200	13,8	9,3
	16008	0	-1	40	68	9	0,1300	13,3	9,15
	6008	0	0	40	68	15	0,1900	16,8	11,6
	6208	2	0	40	80	18	0,3700	30,7	19
	6308	3	0	40	90	23	0,6300	41	24
	6408	4	0	40	110	27	1,2500	63,7	36,5
45	**61809**	8	0	45	58	7	0,0400	6,05	4,3
	61909	9	0	45	68	12	0,1400	10,1	6,7
	16009	0	-1	45	75	10	0,1700	15,6	10,8
	6009	0	0	45	75	16	0,2500	20,8	14,6
	6209	2	0	45	85	19	0,4100	33,2	21,6
	6309	3	0	45	100	25	0,8300	52,7	31,5
	6409	4	0	45	120	29	1,5500	76,1	45
50	**61810**	8	0	50	65	7	0,0520	6,24	4,75
	61910	9	0	50	72	12	0,1400	14,6	10,4
	16010	0	-1	50	80	10	0,1800	16,3	11,4
	6010	0	0	50	80	16	0,2600	21,6	16
	6210	2	0	50	90	20	0,4600	35,1	23,2
	6310	3	0	50	110	27	1,0500	61,8	38
	6410	4	0	50	130	31	1,9000	87,1	52
55	**61811**	8	0	55	72	9	0,0830	8,32	6,2
	61911	9	0	55	80	13	0,1900	15,9	11,4
	16011	0	-1	55	90	11	0,2600	19,5	14

- warehouse - order - phone



Limiting speed [rpm]		Basic makes*									Bearing No.
grease	oil	-	M	TN	N	NR	C3	C4	P66	SS	
13000	15000										6205
12000	14000										6305
10000	12000										6405
14000	16000										60/28
12000	14000										62/28
10000	13000										63/28
17000	20000										61706
15000	18000										61806
14000	17000										61906
13000	15000										16006
13000	15000										6006
11000	13000										6206
10000	12000										6306
8800	10000										6406
12000	12000										60/32
11000	12000										62/32
9000	11000										63/32
13000	16000										61807
12000	15000										61907
12000	14000										16007
12000	14000										6007
9800	11000										6207
8800	10000										6307
7800	9100										6407
12000	14000										61808
11000	13000										61908
10000	12000										16008
10000	12000										6008
8700	10000										6208
7800	9200										6308
7000	8200										6408
11000	12000										61809
9800	12000										61909
9200	11000										16009
9200	11000										6009
7800	9200										6209
7000	8200										6309
6300	7400										6409
9600	11000										61810
8900	11000										61910
8400	9800										16010
8400	9800										6010
7100	8300										6210
6400	7500										6310
5700	6700										6410
8700	10000										61811
8200	9600										61911
7700	9000										16011

* Other products also available

https://nppnovoteh.com

1. RADIAL CONTACT DEEP-GROOVE BALL BEARINGS

1.2 Single-row deep-groove ball bearings
– dimensions from 10 mm – non-sealed



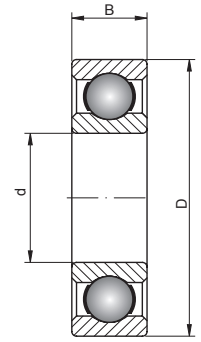

617.. 618.. 628.. 638.. 619..
160.. 60.. 630.. 161.. 62.. 622..
632.. 63..623.. 633.. 64..

55 – 90 mm

Shaft [mm]	Bearing No.	Series		Dimensions [mm]			Weight [kg]	Basic load ratings [kN]	
		SD	SB	d	D	B		dyn. C	stat. C_0
55 cont.	**6011**	0	0	55	90	18	0,3900	28,1	21,2
	6211	2	0	55	100	21	0,6100	43,6	29
	6311	3	0	55	120	29	1,3500	71,5	45
	6411	4	0	55	140	33	2,3000	99,5	62
60	**61812**	8	0	60	78	10	0,1100	8,71	6,7
	61912	9	0	60	85	13	0,2000	16,5	12
	16012	0	-1	60	95	11	0,2800	19,9	15
	6012	0	0	60	95	18	0,4200	29,6	23,2
	6212	2	0	60	110	22	0,7800	47,5	32,5
	6312	3	0	60	130	31	1,7000	81,9	52
	6412	4	0	60	150	35	2,7500	108	69,5
65	**61813**	8	0	65	85	10	0,1300	11,7	9,15
	61913	9	0	65	90	13	0,2200	17,4	13,4
	16013	0	-1	65	100	11	0,3000	21,2	16,6
	6013	0	0	65	100	18	0,4400	30,7	25
	6213	2	0	65	120	23	0,9900	55,9	40,5
	6313	3	0	65	140	33	2,1000	92,3	60
	6413	4	0	65	160	37	3,3000	119	78
70	**61814**	8	0	70	90	10	0,1400	12,1	10
	61914	9	0	70	100	16	0,3500	23,8	18,3
	16014	0	-1	70	110	13	0,4300	28,1	25
	6014	0	0	70	110	20	0,6000	37,7	31
	6214	2	0	70	125	24	1,1000	60,5	45
	6314	3	0	70	150	35	2,5000	104	68
	6414	4	0	70	180	42	4,8500	143	10,4
75	**61815**	8	0	75	95	10	0,1500	12,5	10,8
	61915	9	0	75	105	16	0,3700	24,2	19,3
	16015	0	-1	75	115	13	0,4600	28,6	27
	6015	0	0	75	115	20	0,6400	39,7	33,5
	6215	2	0	75	130	25	1,2000	66,3	49
	6315	3	0	75	160	37	3,0000	111,4	76,5
	6415	4	0	75	190	45	6,8000	153	114
80	**61816**	8	0	80	100	10	0,1500	12,4	10,8
	61916	9	0	80	110	16	0,4000	25,1	20,4
	16016	0	-1	80	125	14	0,6000	33,2	31,5
	6016	0	0	80	125	22	0,8500	47,5	40
	6216	2	0	80	140	26	1,4000	70,2	55
	6316	3	0	80	170	39	3,6000	124	86,5
	6416	4	0	80	200	48	8,0000	163	125
85	**61817**	8	0	85	110	13	0,2700	19,5	16,6
	61917	9	0	85	120	18	0,5500	31,9	30
	16017	0	-1	85	130	14	0,6300	33,8	33,5
	6017	0	0	85	130	22	0,8900	49,4	43
	6217	2	0	85	150	28	1,8000	83,2	64
	6317	3	0	85	180	41	4,2500	133	96,5
	6417	4	0	85	210	52	9,5000	174	137
90	**61818**	8	0	90	115	13	0,2800	19,5	17
	61918	9	0	90	125	18	0,5900	33,2	31,5
	16018	0	-1	90	140	16	0,8500	33,5	33,5

- warehouse - order - phone



Limiting speed [rpm]		Basic makes*									Bearing No.
grease	oil	-	M	TN	N	NR	C3	C4	P66	SS	
7700	9000	●	○	◴	●	●	●	◴	◴	◴	**6011**
6400	7600	●	◴	◴	●	●	●	◴	◴	◴	**6211**
5800	6800	●	◴	○	●	●	◴	◴	◴	○	**6311**
5200	6100	●	◴	○	◴	◴	◴	◴	○	○	**6411**
8000	9400	●	○	○	○	○	○	○	○	○	**61812**
7600	8900	●	○	○	○	○	○	○	○	○	**61912**
7000	8300	●	◴	○	○	○	◴	◴	○	○	**16012**
7000	8300	●	○	◴	●	●	●	◴	◴	◴	**6012**
6000	7000	●	◴	◴	●	●	●	◴	◴	◴	**6212**
5400	6300	●	◴	○	●	●	◴	◴	◴	○	**6312**
4800	5700	●	◴	○	◴	◴	◴	◴	○	○	**6412**
7400	8700	●	○	○	○	○	○	○	○	○	**61813**
7000	8200	●	○	○	○	○	○	○	○	○	**61913**
6500	7700	●	◴	○	○	○	◴	◴	○	○	**16013**
6500	7700	●	○	◴	●	●	●	◴	◴	◴	**6013**
5500	6500	●	◴	◴	●	●	●	◴	◴	◴	**6213**
4900	5800	●	◴	○	●	●	◴	◴	◴	○	**6313**
4400	5200	●	◴	○	◴	◴	◴	◴	○	○	**6413**
6900	8100	●	○	○	○	○	○	○	○	○	**61814**
6500	7700	●	○	○	○	○	○	○	○	○	**61914**
6100	7100	●	◴	○	○	○	◴	◴	○	○	**16014**
6100	7100	●	◴	○	●	●	●	◴	◴	◴	**6014**
5100	6000	●	◴	◴	●	●	●	◴	◴	◴	**6214**
4600	5400	●	◴	○	●	●	◴	◴	◴	○	**6314**
4100	4800	●	◴	○	◴	◴	◴	◴	○	○	**6414**
6400	7600	●	○	○	○	○	○	○	○	○	**61815**
6100	7200	●	○	○	○	○	○	○	○	○	**61915**
5700	6700	●	◴	○	○	○	◴	◴	○	○	**16015**
5700	6700	●	◴	○	●	●	●	◴	◴	◴	**6015**
4800	5600	●	◴	◴	●	●	●	◴	◴	◴	**6215**
4300	5000	●	◴	○	●	●	◴	◴	◴	○	**6315**
3800	4500	●	◴	○	◴	◴	◴	◴	○	○	**6415**
6000	7100	●	○	○	○	○	○	○	○	○	**61816**
5700	6700	●	○	○	○	○	○	○	○	○	**61916**
5300	6200	●	◴	○	○	○	◴	◴	○	○	**16016**
5300	6200	●	◴	○	●	●	●	◴	◴	◴	**6016**
4500	5300	●	◴	◴	●	●	●	◴	◴	◴	**6216**
4000	4700	●	◴	○	●	●	◴	◴	◴	○	**6316**
3600	4200	●	◴	○	◴	◴	◴	◴	○	○	**6416**
5700	6700	●	○	○	○	○	○	○	○	○	**61817**
5400	6300	●	○	○	○	○	○	○	○	○	**61917**
5000	5900	●	◴	○	○	○	◴	◴	○	○	**16017**
5000	5900	●	◴	○	●	●	●	◴	◴	◴	**6017**
4200	5000	●	◴	◴	●	●	●	◴	◴	◴	**6217**
3800	4500	●	◴	○	●	●	◴	◴	◴	○	**6317**
3400	4000	●	◴	○	◴	◴	◴	◴	○	○	**6417**
5400	6300	●	○	○	○	○	○	○	○	○	**61818**
5100	6000	●	○	○	○	○	○	○	○	○	**61918**
4700	5600	●	◴	○	○	○	◴	◴	○	○	**16018**

* Other products also available

https://nppnovoteh.com

1. RADIAL CONTACT DEEP-GROOVE BALL BEARINGS

1.2 Single-row deep-groove ball bearings
– dimensions from 10 mm – non-sealed



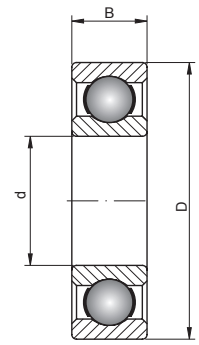

617.. 618.. 628.. 638.. 619..
160.. 60.. 630.. 161.. 62.. 622..
632.. 63..623.. 633.. 64..

90 – 140 mm

Shaft [mm]	Bearing No.	Series		Dimensions [mm]			Weight [kg]	Basic load ratings [kN]	
		SD	SB	d	D	B		dyn. C	stat. C_0
90 cont.	**6018**	0	0	90	140	24	1,1500	58,5	50
	6218	2	0	90	160	30	2,1500	95,6	73,5
	6318	3	0	90	190	43	4,9000	143	108
	6418	4	0	90	225	54	11,5000	186	150
95	**61819**	8	0	95	120	13	0,3000	19,9	17,6
	16019	0	-1	95	145	16	0,8850	34,5	35
	6019	0	0	95	145	24	1,2000	60,5	54
	6219	2	0	95	170	32	2,6000	108	81,5
	6319	3	0	95	200	45	5,6500	153	118
	6419	4	0	95	240	55	13,4000	186	153
100	**61820**	8	0	100	125	13	0,3100	19,9	18,3
	61920	9	0	100	140	20	0,8300	42,3	41,5
	16020	0	-1	100	150	16	0,9100	44,2	44
	6020	0	0	100	150	24	1,2500	60,5	54
	6220	2	0	100	180	34	3,1500	124	93
	6320	3	0	100	215	47	7,5600	174	140
	6420	4	0	100	250	58	15,0000	206	175
105	**61821**	8	0	105	130	13	0,3200	20,8	19,6
	16021	0	-1	105	160	18	1,2000	52	51
	6021	0	0	105	160	26	1,6000	72,8	65,5
	6221	2	0	105	190	36	3,7000	133	104
	6321	3	0	105	225	49	8,2500	182	153
	6421	4	0	105	260	60	16,8000	207	179
110	**61822**	8	0	110	140	16	0,6000	28,1	26
	61922	9	0	110	150	20	0,9000	43,6	45
	16022	0	-1	110	170	19	1,4500	57,2	57
	6022	0	0	110	170	28	1,9500	81,9	73,5
	6222	2	0	110	200	38	4,3500	143	118
	6322	3	0	110	240	50	9,5500	203	180
	6422	4	0	110	280	65	21,3000	247	227
120	**61824**	8	0	120	150	16	0,6500	29,1	28
	61924	9	0	120	165	22	1,2000	55,3	57
	16024	0	-1	120	180	19	1,6000	60,5	64
	6024	0	0	120	180	28	2,0500	85,2	80
	6224	2	0	120	215	40	5,1500	146	118
	6324	3	0	120	260	55	14,5000	208	186
	6424	4	0	120	310	72	29,0000	291	287
130	**61826**	8	0	130	165	18	0,9300	37,7	43
	61926	9	0	130	180	24	1,6000	65	67
	16026	0	-1	130	200	22	2,3500	79,3	81,5
	6026	0	0	130	200	33	3,1500	85,2	80
	6226	2	0	130	230	40	5,8000	156	132
	6326	3	0	130	280	58	18,0000	229	216
	6426	4	0	130	340	78	38,0000	300	298
140	**61828**	8	0	140	175	18	0,9900	39	46,5
	61928	9	0	140	190	24	1,7000	66,3	72
	16028	0	-1	140	210	22	2,5000	80,6	86,5
	6028	0	0	140	210	33	3,3500	85,2	80
	6228	2	0	140	250	42	7,4500	165	150

- warehouse - order - phone



Limiting speed [rpm]		Basic makes*									Bearing No.
grease	oil	-	M	TN	N	NR	C3	C4	P66	SS	
4700	5600	●	◴	◝	●	●	●	◴	◴	◴	**6018**
4000	4700	●	◴	◝	●	●	●	◴	◴	◴	**6218**
3600	4200	●	◴	◝	●	●	◴	◴	◴	◝	**6318**
3200	3800	●	◴	◝	◴	◴	◴	◴	◝	◝	**6418**
5000	5900	●	◝	◝	◝	◝	◝	◝	◝	◝	**61819**
4500	5300	●	◴	◝	◝	◝	◴	◴	◝	◝	**16019**
4500	5300	●	◴	◝	●	●	●	◴	◴	◴	**6019**
3700	4400	●	◴	◝	◴	◴	◴	◴	◴	◴	**6219**
3300	3900	●	◴	◝	●	●	◴	◴	◝	◝	**6319**
3000	3500	◴	◴	◝	◴	◴	◴	◴	◝	◝	**6419**
4800	5600	●	◝	◝	◝	◝	◝	◝	◝	◝	**61820**
4500	5300	●	◝	◝	◝	◝	◝	◝	◝	◝	**61920**
4200	5000	●	◴	◝	◝	◝	◴	◴	◝	◝	**16020**
4200	5000	●	◴	◝	●	●	●	◴	◴	◴	**6020**
3500	4200	●	◴	◝	◴	◴	◴	◴	◴	◴	**6220**
3200	3700	●	◴	◝	●	●	◴	◴	◝	◝	**6320**
2900	3400	◴	◴	◝	◴	◴	◴	◴	◝	◝	**6420**
4600	5400	◴	◝	◝	◝	◝	◝	◝	◝	◝	**61821**
4000	4700	●	◴	◝	◝	◝	◴	◴	◝	◝	**16021**
4000	4700	●	◴	◝	●	●	●	◴	◝	◴	**6021**
3400	4000	●	◴	◝	◴	◴	◴	◴	◴	◴	**6221**
3000	3600	●	◴	◝	◴	◴	◴	◴	◝	◝	**6321**
2700	3200	◴	◴	◝	◴	◴	◴	◴	◝	◝	**6421**
4300	5100	◴	◝	◝	◝	◝	◝	◝	◝	◝	**61822**
4100	4800	◴	◝	◝	◝	◝	◝	◝	◝	◝	**61922**
3800	4500	●	◴	◝	◝	◝	◴	◴	◝	◝	**16022**
3800	4500	●	◴	◝	●	●	●	◴	◝	◴	**6022**
3200	3800	●	◴	◝	◴	◴	◴	◴	◴	◴	**6222**
2900	3400	●	◴	◝	◴	◴	◴	◴	◝	◝	**6322**
2600	3000	◴	◴	◝	◴	◴	◴	◴	◝	◝	**6422**
4000	4700	◴	◝	◝	◝	◝	◝	◝	◝	◝	**61824**
3800	4400	◴	◝	◝	◝	◝	◝	◝	◝	◝	**61924**
3500	4100	●	◴	◝	◝	◝	◴	◴	◝	◝	**16024**
3500	4100	●	◴	◝	●	●	●	◴	◝	◝	**6024**
2900	3400	●	◴	◝	◴	◴	◴	◴	◴	◴	**6224**
2600	3100	●	◴	◝	◴	◴	◴	◴	◝	◝	**6324**
2300	2800	◴	◴	◝	◴	◴	◴	◴	◝	◝	**6424**
3700	4300	◴	◝	◝	◝	◝	◝	◝	◝	◝	**61826**
3500	4100	◴	◝	◝	◝	◝	◝	◝	◝	◝	**61926**
3200	3800	●	◴	◝	◝	◝	◴	◴	◝	◝	**16026**
3200	3800	●	◴	◝	●	●	●	◴	◝	◝	**6026**
2700	3100	●	◴	◝	◴	◴	◴	◴	◴	◴	**6226**
2400	2800	●	◴	◝	◴	◴	◴	◴	◝	◝	**6326**
2200	2500	◴	◴	◝	◴	◴	◴	◴	◝	◝	**6426**
3400	4000	◴	◝	◝	◝	◝	◝	◝	◝	◝	**61828**
3200	3800	◴	◝	◝	◝	◝	◝	◝	◝	◝	**61928**
3000	3500	◴	◴	◝	◝	◝	◴	◴	◝	◝	**16028**
3000	3500	●	◴	◝	●	●	●	◴	◝	◝	**6028**
2500	2900	●	◴	◝	◴	◴	◴	◴	◴	◴	**6228**

* Other products also available

https://nppnovoteh.com

1. RADIAL CONTACT DEEP-GROOVE BALL BEARINGS

1.2 Single-row deep-groove ball bearings
– dimensions from 10 mm – non-sealed



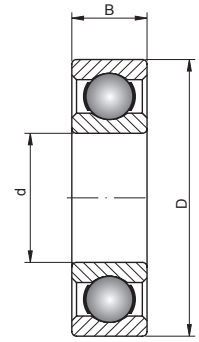

617.. 618.. 628.. 638.. 619..
160.. 60.. 630.. 161.. 62.. 622..
632.. 63..623.. 633.. 64..

140 – 240 mm

Shaft [mm]	Bearing No.	Series		Dimensions [mm]			Weight [kg]	Basic load ratings [kN]	
		SD	SB	d	D	B		dyn. C	stat. C_0
140 cont.	**6328**	3	0	140	300	62	22,0000	251	245
150	**61830**	8	0	150	190	20	1,1600	47,5	55
	61930	9	0	150	210	28	2,4700	85	90,5
	16030	0	-1	150	225	24	3,1500	92,3	98
	6030	0	0	150	225	35	4,8000	125	125
	6230	2	0	150	270	45	9,4000	174	166
	6330	3	0	150	320	65	26,0000	276	285
160	**61832**	8	0	160	200	20	1,4500	49,4	64
	61932	9	0	160	220	28	2,6100	87	96
	16032	0	-1	160	240	25	3,7000	99,5	108
	6032	0	0	160	240	38	5,9000	143	143
	6232	2	0	160	290	48	14,5000	186	186
	6332	3	0	160	340	68	29,0000	276	285
170	**61834**	8	0	170	215	22	1,9000	61,8	78
	61934	9	0	170	230	28	2,7400	86	95,5
	16034	0	-1	170	260	28	5,0000	119	129
	6034	0	0	170	260	42	7,9000	168	173
	6234	2	0	170	310	52	17,5000	212	224
	6334	3	0	170	360	72	34,5000	312	340
180	**61836**	8	0	180	225	22	2,0000	62,4	81,5
	61936	9	0	180	250	33	4,7600	110	119
	16036	0	-1	180	280	31	6,6000	138	146
	6036	0	0	180	280	46	10,5000	190	200
	6236	2	0	180	320	52	18,5000	229	240
	6336	3	0	180	380	75	42,5000	351	405
190	**61838**	8	0	190	240	24	2,6200	73	88
	16038	0	-1	190	290	31	7,9000	148	166
	6038	0	0	190	290	46	11,0000	195	216
	6238	2	0	190	340	55	22,8000	255	280
	6338	3	0	190	400	78	49,0000	371	430
200	**61840**	8	0	200	250	24	2,7000	76,1	102
	61940	9	0	200	280	38	7,4000	148	166
	16040	0	-1	200	310	34	8,8500	168	190
	6040	0	0	200	310	51	14,0000	216	245
	6240	2	0	200	360	58	28,0000	270	310
	6340	3	0	200	420	80	55,5000	377	465
220	**61844**	8	0	220	270	24	3,0000	78	110
	61944	9	0	220	300	38	8,0000	151	180
	16044	0	-1	220	340	37	11,5000	174	204
	6044	0	0	220	340	56	18,5000	247	290
	6244	2	0	220	400	65	37,0000	296	365
	6344	3	0	220	460	88	60,8000	410	520
240	**61848**	8	0	240	300	28	4,6000	98,5	127
	61948	9	0	240	320	38	8,2800	170	203
	16048	0	-1	240	360	37	12,1000	178	217
	6048	0	0	240	360	56	19,5000	255	315
	6248	2	0	240	440	72	51,0000	340	431
	6348	3	0	240	500	95	93,3000	470	624

- warehouse - order - phone



Limiting speed [rpm]		Basic makes*									Bearing No.
grease	oil	-	M	TN	N	NR	C3	C4	P66	SS	
2200	2600	◴	◴	◝	◴	◴	◴	◴	◝	◝	**6328**
3100	3700	◴	◝	◝	◝	◝	◝	◝	◝	◝	**61830**
3000	3500	◴	◝	◝	◝	◝	◝	◝	◝	◝	**61930**
2800	3200	◴	◴	◝	◝	◝	◴	◴	◝	◝	**16030**
2800	3200	⬘	◴	◝	◴	◴	⬘	◴	◝	◝	**6030**
2300	2700	⬘	◴	◝	◴	◴	◴	◴	◴	◴	**6230**
2000	2400	◴	◴	◝	◴	◴	◴	◴	◝	◝	**6330**
2900	3400	◴	◝	◝	◝	◝	◝	◝	◝	◝	**61832**
2800	3300	◴	◝	◝	◝	◝	◝	◝	◝	◝	**61932**
2600	3000	◴	◴	◝	◝	◝	◴	◴	◝	◝	**16032**
2600	3000	⬘	◴	◝	◴	◴	⬘	◴	◝	◝	**6032**
2100	2500	⬘	◴	◝	◴	◴	◴	◴	◴	◴	**6232**
1900	2300	◴	◴	◝	◴	◴	◴	◴	◝	◝	**6332**
2700	3200	◴	◝	◝	◝	◝	◝	◝	◝	◝	**61834**
2600	3100	◴	◝	◝	◝	◝	◝	◝	◝	◝	**61934**
2400	2800	◴	◴	◝	◝	◝	◴	◴	◝	◝	**16034**
2400	2800	⬘	◴	◝	◴	◴	⬘	◴	◝	◝	**6034**
2000	2400	⬘	◴	◝	◴	◴	◴	◴	◴	◴	**6234**
1800	2100	◴	◴	◝	◴	◴	◴	◴	◝	◝	**6334**
2600	3000	◴	◝	◝	◝	◝	◝	◝	◝	◝	**61836**
2400	2900	◴	◝	◝	◝	◝	◝	◝	◝	◝	**61936**
2300	2700	◴	◴	◝	◝	◝	◴	◴	◝	◝	**16036**
2300	2700	⬘	◴	◝	◴	◴	⬘	◴	◝	◝	**6036**
1900	2200	⬘	◴	◝	◴	◴	◴	◴	◴	◴	**6236**
1700	2000	◴	◴	◝	◴	◴	◴	◴	◝	◝	**6336**
2400	2900	◴	◝	◝	◝	◝	◝	◝	◝	◝	**61838**
2100	2500	◴	◴	◝	◝	◝	◴	◴	◝	◝	**16038**
2100	2500	⬘	◴	◝	◴	◴	⬘	◴	◝	◝	**6038**
1800	2100	⬘	◴	◝	◴	◴	◴	◴	◴	◴	**6238**
1600	1900	◴	◴	◝	◴	◴	◴	◴	◝	◝	**6338**
2300	2700	◴	◝	◝	◝	◝	◝	◝	◝	◝	**61840**
2200	2600	◴	◝	◝	◝	◝	◝	◝	◝	◝	**61940**
2000	2400	◴	◴	◝	◝	◝	◴	◴	◝	◝	**16040**
2000	2400	⬘	◴	◝	◴	◴	⬘	◴	◝	◝	**6040**
1700	2000	⬘	◴	◝	◝	◝	◝	◝	◝	◝	**6240**
1500	1800	◴	◴	◝	◴	◴	◴	◴	◝	◝	**6340**
2100	2400	◴	◝	◝	◝	◝	◝	◝	◝	◝	**61844**
2000	2300	◴	◝	◝	◝	◝	◝	◝	◝	◝	**61944**
1800	2200	◴	◴	◝	◝	◝	◴	◴	◝	◝	**16044**
1800	2200	⬘	◴	◝	◴	◴	⬘	◴	◝	◝	**6044**
1500	1800	◴	◴	◝	◝	◝	◝	◝	◝	◝	**6244**
1400	1600	◝	◝	◝	◝	◝	◝	◝	◝	◝	**6344**
1900	2200	◴	◝	◝	◝	◝	◝	◝	◝	◝	**61848**
1800	2100	◴	◝	◝	◝	◝	◝	◝	◝	◝	**61948**
1700	2000	◴	◴	◝	◝	◝	◴	◴	◝	◝	**16048**
1700	2000	⬘	◴	◝	◴	◴	⬘	◴	◝	◝	**6048**
1300	1600	◴	◴	◝	◝	◝	◝	◝	◝	◝	**6248**
1300	1500	◝	◝	◝	◝	◝	◝	◝	◝	◝	**6348**

* Other products also available

https://nppnovoteh.com

1. RADIAL CONTACT DEEP-GROOVE BALL BEARINGS

1.2 Single-row deep-groove ball bearings
– dimensions from 10 mm – non-sealed



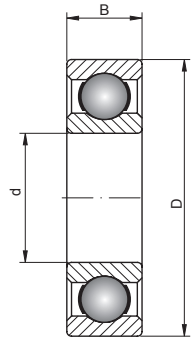

617.. 618.. 628.. 638.. 619..
160.. 60.. 630.. 161.. 62.. 622..
632.. 63..623.. 633.. 64..

260 – 420 mm

Shaft [mm]	Bearing No.	Series		Dimensions [mm]			Weight [kg]	Basic load ratings [kN]	
		SD	SB	d	D	B		dyn. C	stat. C_0
260	**61852**	8	0	260	320	28	4,8000	111	163
	61952	9	0	260	360	46	14,5000	212	270
	16052	0	-1	260	400	44	18,5000	227	299
	6052	0	0	260	400	65	25,0000	291	375
	6252	2	0	260	480	80	65,5000	390	530
	6352	3	0	260	540	102	116,0000	531	741
280	**61856**	8	0	280	350	33	7,4000	138	200
	61956	9	0	280	380	46	15,5000	216	285
	16056	0	-1	280	420	44	23,0000	232	315
	6056	0	0	280	420	65	31,0000	325	420
	6256	2	0	280	500	80	71,0000	423	600
	6356	3	0	280	580	108	145,0000	568	845
300	**61860**	8	0	300	380	38	10,5000	162	210
	61960	9	0	300	420	56	23,5000	276	375
	16060	0	-1	300	460	50	32,5000	292	410
	6060	0	0	300	460	74	43,8000	355	480
	6260	2	0	300	540	85	89,5000	441	663
	6360	3	0	300	620	109	169,0000	593	886
320	**61864**	8	0	320	400	38	10,9000	168	228
	61964	9	0	320	440	56	24,8000	285	405
	16064	0	-1	320	480	50	34,2000	300	440
	6064	0	0	320	480	74	46,0000	371	540
	6264	2	0	320	580	92	113,0000	489	744
	6364	3	0	320	670	112	207,0000	634	1010
340	**61868**	8	0	340	420	38	11,5000	170	236
	61968	9	0	340	460	56	26,2000	293	430
	16068	0	-1	340	520	57	47,1000	340	515
	6068	0	0	340	520	82	62,0000	423	640
	6268	2	0	340	620	92	131,0000	511	817
	6368	3	0	340	710	118	238,0000	704	1160
360	**61872**	8	0	360	440	38	12,3000	187	258
	61972	9	0	360	480	56	27,5000	300	455
	16072	0	-1	360	540	57	49,3000	350	550
	6072	0	0	360	540	82	64,5000	462	735
	6272	2	0	360	650	95	144,0000	557	904
380	**61876**	8	0	380	480	46	19,7000	231	340
	61976	9	0	380	520	65	39,8000	325	510
	16076	0	-1	380	560	57	51,0000	377	620
	6076	0	0	380	560	82	67,5000	455	725
	6276	2	0	380	680	95	162,0000	584	990
400	**61880**	8	0	400	500	46	20,6000	235	350
	61980	9	0	400	540	65	41,6000	335	535
	16080	0	-1	400	600	63	65,0000	358	587
	6080	0	0	400	600	90	87,5000	520	865
	6280	2	0	400	720	103	197,0000	628	1080
420	**61884**	8	0	420	520	46	21,6000	260	405
	61984	9	0	420	560	65	43,4000	340	560
	16084	0	-1	420	620	63	69,9000	367	617

- warehouse - order - phone



Limiting speed [rpm]		Basic makes*									Bearing No.
grease	oil	-	M	TN	N	NR	C3	C4	P66	SS	
1700	2000	◴									**61852**
1600	1900	◴									**61952**
1500	1800	◴	◴				◴	◴			**16052**
1500	1800	⬘	◴		◴	◴	⬘	◴			**6052**
1100	1400	◴	◴								**6252**
1200	1400										**6352**
1600	1900										**61856**
1500	1800										**61956**
1400	1600	◴	◴				◴	◴			**16056**
1400	1600	⬘	◴		◴	◴	⬘	◴			**6056**
1100	1400	◴	◴								**6256**
1100	1300										**6356**
1500	1700										**61860**
1400	1600										**61960**
1300	1500	◴	◴				◴	◴			**16060**
1300	1500	◴	◴				◴				**6060**
1000	1350	◴	◴								**6260**
1000	1150										**6360**
1400	1600										**61864**
1300	1500										**61964**
1200	1400	◴	◴				◴	◴			**16064**
1200	1400	◴	◴				◴				**6064**
950	1200	◴	◴								**6264**
900	1050										**6364**
1300	1500										**61868**
1200	1400										**61968**
1100	1300	◴	◴				◴	◴			**16068**
1100	1300	◴	◴				◴				**6068**
900	1100	◴	◴								**6268**
800	950										**6368**
1200	1400										**61872**
1100	1300										**61972**
1100	1200	◴	◴				◴	◴			**16072**
1100	1200	◴	◴				◴				**6072**
850	1000	◴	◴								**6272**
1100	1300										**61876**
1100	1200										**61976**
950	1200	◴	◴				◴	◴			**16076**
990	1200	◴	◴				◴				**6076**
800	900	◴	◴								**6276**
1100	1200										**61880**
990	1200										**61980**
890	1080	◴	◴				◴	◴			**16080**
930	1100	◴	◴				◴				**6080**
700	800	◴	◴								**6280**
1000	1200										**61884**
940	1100										**61984**
810	1000										**16084**

* Other products also available

https://nppnovoteh.com

1. RADIAL CONTACT DEEP-GROOVE BALL BEARINGS

1.2 Single-row deep-groove ball bearings
– dimensions from 10 mm – non-sealed



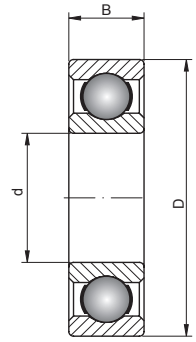

617.. 618.. 628.. 638.. 619..
160.. 60.. 630.. 161.. 62.. 622..
632.. 63..623.. 633.. 64..

420 – 1000 mm

Shaft [mm]	Bearing No.	Series		Dimensions [mm]			Weight [kg]	Basic load ratings [kN]	
		SD	SB	d	D	B		dyn. C	stat. C_0
420 cont.	**6084**	0	0	420	620	90	91,1000	530	895
440	**61888**	8	0	440	540	46	22,5000	264	420
	61988	9	0	440	600	74	60,0000	365	615
	16088	0	-1	440	650	67	81,7000	407	710
460	**61892**	8	0	460	580	56	34,8000	315	515
	61992	9	0	460	620	74	62,2000	375	645
	16092	0	-1	460	680	71	91,2000	431	767
480	**61896**	8	0	480	600	56	36,5000	325	600
	61996	9	0	480	650	78	73,0000	430	770
	16096	0	-1	480	700	71	98,5000	444	807
500	**618/500**	8	0	500	620	56	37,5000	325	560
	619/500	9	0	500	670	78	75,5000	445	805
	160/500	0	-1	500	720	71	102,0000	455	846
	60/500	0	0	500	720	100	128,0000	600	1100
530	**618/530**	8	0	530	650	56	39,5000	330	580
	619/530	9	0	530	710	82	89,2000	512	975
	60/530	0	0	530	780	112	184,0000	679	1300
560	**618/560**	8	0	560	680	56	41,5000	335	600
	619/560	9	0	560	750	85	101,0000	525	1020
	60/560	0	0	560	820	115	199,0000	763	1520
600	**618/600**	8	0	600	730	60	51,7000	375	705
	619/600	9	0	600	800	90	127,0000	592	1200
	60/600	0	0	600	870	118	236,0000	790	1640
630	**618/630**	8	0	630	780	69	73,0000	442	965
	619/630	9	0	630	850	100	163,0000	657	1370
	60/630	0	0	630	920	128	276,0000	841	1770
670	**618/670**	8	0	670	820	69	77,5000	442	1000
	619/670	9	0	670	900	103	187,0000	673	1450
	60/670	0	0	670	980	136	337,0000	870	1920
710	**618/710**	8	0	710	870	74	93,5000	475	1100
	619/710	9	0	710	950	106	213,0000	766	1730
	60/710	0	0	710	1030	140	394,0000	1020	2310
750	**618/750**	8	0	750	920	78	110,0000	527	1250
	619/750	9	0	750	1000	140	246,0000	785	1820
	60/750	0	0	750	1090	150	473,0000	1050	2500
800	**618/800**	8	0	800	980	82	130,0000	559	1370
	619/800	9	0	800	1060	115	280,0000	850	2020
	60/800	0	0	800	1150	155	533,0000	1090	2690
900	**618/900**	8	0	900	1090	85	160,0000	618	1600
950	**618/950**	8	0	950	1150	90	190,0000	701	1740
1000	**618/1000**	8	0	1000	1220	100	245,0000	637	1800

- warehouse - order - phone



Limiting speed [rpm]		Basic makes*									Bearing No.
grease	oil	-	M	TN	N	NR	C3	C4	P66	SS	
880	1000	✓	✓	✓	✓	✓	✓	✓	✓	✓	**6084**
950	1100	✓	✓	✓	✓	✓	✓	✓	✓	✓	**61888**
890	1000	✓	✓	✓	✓	✓	✓	✓	✓	✓	**61988**
730	920	✓	✓	✓	✓	✓	✓	✓	✓	✓	**16088**
900	1100	✓	✓	✓	✓	✓	✓	✓	✓	✓	**61892**
850	1000	✓	✓	✓	✓	✓	✓	✓	✓	✓	**61992**
650	840	✓	✓	✓	✓	✓	✓	✓	✓	✓	**16092**
850	1000	✓	✓	✓	✓	✓	✓	✓	✓	✓	**61896**
810	950	✓	✓	✓	✓	✓	✓	✓	✓	✓	**61996**
570	760	✓	✓	✓	✓	✓	✓	✓	✓	✓	**16096**
820	970	✓	✓	✓	✓	✓	✓	✓	✓	✓	**618/500**
770	910	✓	✓	✓	✓	✓	✓	✓	✓	✓	**619/500**
490	680	✓	✓	✓	✓	✓	✓	✓	✓	✓	**160/500**
750	900	✓	✓	✓	✓	✓	✓	✓	✓	✓	**60/500**
770	900	✓	✓	✓	✓	✓	✓	✓	✓	✓	**618/530**
726	863	✓	✓	✓	✓	✓	✓	✓	✓	✓	**619/530**
670	800	✓	✓	✓	✓	✓	✓	✓	✓	✓	**60/530**
710	840	✓	✓	✓	✓	✓	✓	✓	✓	✓	**618/560**
684	820	✓	✓	✓	✓	✓	✓	✓	✓	✓	**619/560**
630	750	✓	✓	✓	✓	✓	✓	✓	✓	✓	**60/560**
660	780	✓	✓	✓	✓	✓	✓	✓	✓	✓	**618/600**
642	777	✓	✓	✓	✓	✓	✓	✓	✓	✓	**619/600**
590	700	✓	✓	✓	✓	✓	✓	✓	✓	✓	**60/600**
630	750	✓	✓	✓	✓	✓	✓	✓	✓	✓	**618/630**
600	734	✓	✓	✓	✓	✓	✓	✓	✓	✓	**619/630**
560	670	✓	✓	✓	✓	✓	✓	✓	✓	✓	**60/630**
560	670	✓	✓	✓	✓	✓	✓	✓	✓	✓	**618/670**
558	691	✓	✓	✓	✓	✓	✓	✓	✓	✓	**619/670**
500	600	✓	✓	✓	✓	✓	✓	✓	✓	✓	**60/670**
530	630	✓	✓	✓	✓	✓	✓	✓	✓	✓	**618/710**
516	648	✓	✓	✓	✓	✓	✓	✓	✓	✓	**619/710**
480	560	✓	✓	✓	✓	✓	✓	✓	✓	✓	**60/710**
500	600	✓	✓	✓	✓	✓	✓	✓	✓	✓	**618/750**
474	605	✓	✓	✓	✓	✓	✓	✓	✓	✓	**619/750**
435	500	✓	✓	✓	✓	✓	✓	✓	✓	✓	**60/750**
450	530	✓	✓	✓	✓	✓	✓	✓	✓	✓	**618/800**
432	562	✓	✓	✓	✓	✓	✓	✓	✓	✓	**619/800**
395	445	✓	✓	✓	✓	✓	✓	✓	✓	✓	**60/800**
380	450	✓	✓	✓	✓	✓	✓	✓	✓	✓	**618/900**
360	420	✓	✓	✓	✓	✓	✓	✓	✓	✓	**618/950**
340	400	✓	✓	✓	✓	✓	✓	✓	✓	✓	**618/1000**

* Other products also available

https://nppnovoteh.com

1. RADIAL CONTACT DEEP-GROOVE BALL BEARINGS

1.2 Single-row deep-groove ball bearings
– dimensions from 10 mm – non-sealed



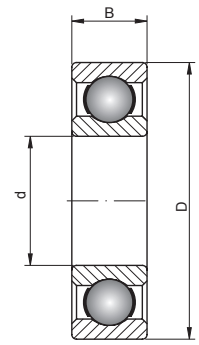

617.. 618.. 628.. 638.. 619..
160.. 60.. 630.. 161.. 62.. 622..
632.. 63..623.. 633.. 64..

1060 – 1400 mm

Shaft [mm]	Bearing No.	Series		Dimensions [mm]			Weight [kg]	Basic load ratings [kN]	
		SD	SB	d	D	B		dyn. C	stat. C_0
1060	**618/1060**	8	0	1060	1280	100	260,0000	728	2120
1120	**618/1120**	8	0	1120	1360	106	319,0000	886	2410
1180	**618/1180**	8	0	1180	1420	106	334,0000	919	2580
1250	**618/1250**	8	0	1250	1500	112	478,0000	927	2670
1320	**618/1320**	8	0	1320	1600	122	504,0000	1040	3130
1400	**618/1400**	8	0	1400	1700	132	621,0000	1130	3510

- warehouse - order - phone



Limiting speed [rpm]		Basic makes*									Bearing No.
grease	oil	-	M	TN	N	NR	C3	C4	P66	SS	
300	360	✓	✓	✓	✓	✓	✓	✓	✓	✓	**618/1060**
265	315	✓	✓	✓	✓	✓	✓	✓	✓	✓	**618/1120**
230	280	✓	✓	✓	✓	✓	✓	✓	✓	✓	**618/1180**
200	240	✓	✓	✓	✓	✓	✓	✓	✓	✓	**618/1250**
175	200	✓	✓	✓	✓	✓	✓	✓	✓	✓	**618/1320**
150	170	✓	✓	✓	✓	✓	✓	✓	✓	✓	**618/1400**

* Other products also available

https://nppnovoteh.com

1. RADIAL CONTACT DEEP-GROOVE BALL BEARINGS

1.3 Single-row deep-groove ball bearings
- dimensions from 10 mm – sealed RS



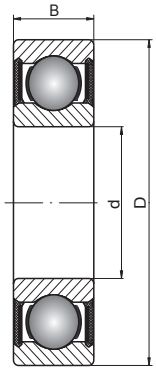

2RS

10 – 22 mm

Shaft [mm]	Bearing No.	Series		Dimensions [mm]			Weight [kg]	Basic load ratings [kN]	
		SD	SB	d	D	B		dyn. C	stat. C_0
10	**61800 2RS**	8	0	10	19	5	0,0055	1,38	0,585
	63800 2RS	8	3	10	19	7	0,0250	1,72	0,84
	61900 2RS	9	0	10	22	6	0,0100	1,95	0,75
	6000 2RS	0	0	10	26	8	0,0190	4,62	1,96
	63000 2RS	0	3	10	26	12	0,0250	4,62	1,96
	6200 2RS	2	0	10	30	9	0,0320	5,07	2,36
	62200 2RS	2	2	10	30	14	0,0400	5,07	2,36
	6300 2RS	3	0	10	35	11	0,0530	8,06	3,4
	62300 2RS	3	2	10	35	17	0,0600	8,06	3,4
12	**61801 2RS**	8	0	12	21	5	0,0063	1,43	0,67
	63801 2RS	8	3	12	21	7	0,0700	1,92	1,035
	61901 2RS	9	0	12	24	6	0,0110	2,25	0,98
	6001 2RS	0	0	12	28	8	0,0220	5,07	2,36
	63001 2RS	0	3	12	28	12	0,0290	5,07	2,36
	6201 2RS	2	0	12	32	10	0,0370	6,89	3,1
	62201 2RS	2	2	12	32	14	0,0480	6,89	3,1
	6301 2RS	3	0	12	37	12	0,0600	9,75	4,15
	62301 2RS	3	2	12	37	17	0,0700	9,75	4,15
15	**61802 2RS**	8	0	15	24	5	0,0074	1,56	0,8
	63802 2RS	8	3	15	24	7	0,0700	2,08	1,255
	61902 2RS	9	0	15	28	7	0,0160	4,03	2,04
	6002 2RS	0	0	15	32	9	0,0300	5,59	2,85
	63002 2RS	0	3	15	32	13	0,0390	5,59	2,85
	6202 2RS	2	0	15	35	11	0,0450	7,8	3,75
	62202 2RS	2	2	15	35	14	0,0540	7,8	3,75
	63202 2RS	2	3	15	35	15,9	0,0650	7,75	3,6
	6302 2RS	3	0	15	42	13	0,0820	11,4	5,4
	62302 2RS	3	2	15	42	17	0,1100	11,4	5,4
17	**61803 2RS**	8	0	17	26	5	0,0082	1,68	0,93
	63803 2RS	8	3	17	26	7	0,0800	2,23	1,45
	61903 2RS	9	0	17	30	7	0,0180	4,36	2,32
	6003 2RS	0	0	17	35	10	0,0390	6,05	3,25
	63003 2RS	0	3	17	35	14	0,0520	6,05	3,25
	6203 2RS	2	0	17	40	12	0,0650	9,56	4,75
	62203 2RS	2	2	17	40	16	0,0830	9,56	4,75
	63203 2RS	2	3	17	40	17,5	0,0930	9,6	4,6
	6303 2RS	3	0	17	47	14	0,1200	135	6,55
	62303 2RS	3	2	17	47	19	0,1500	13,5	6,55
20	**61804 2RS**	8	0	20	32	7	0,0180	2,7	1,5
	61904 2RS	9	0	20	37	9	0,0380	6,37	3,65
	6004 2RS	0	0	20	42	12	0,0690	9,36	5
	63004 2RS	0	3	20	42	16	0,0860	9,36	5
	6204 2RS	2	0	20	47	14	0,1100	12,7	6,55
	62204 2RS	2	2	20	47	18	0,1300	12,7	6,55
	63204 2RS	2	3	20	47	20,6	0,1540	12,8	6,65
	6304 2RS	3	0	20	52	15	0,1400	15,9	7,8
	62304 2RS	3	2	20	52	21	0,2070	15,9	7,8
	63304 2RS	3	3	20	52	22,2	0,2130	15,9	7,9
22	**60/22 2RS**	0	0	22	44	12	0,0730	9,4	5,15
	62/22 2RS	2	0	22	50	14	0,1180	12,8	6,65
	63/22 2RS	3	0	22	56	16	0,2010	18,5	9,4

- warehouse - order - phone



Limiting speed [rpm]	Basic makes*									Bearing No.
grease	-	RS	TN	M	C3	C4	NR	P66	SS	
20000	●	●	◴	◝	◴	◴	◝	◴	◴	**61800 2RS**
22000	◝	◝	◝	◝	◝	◝	◝	◝	◝	**63800 2RS**
19000	●	●	◴	◝	◴	◴	◝	◴	◴	**61900 2RS**
19000	●	●	◴	◝	◴	◴	◴	●	●	**6000 2RS**
19000	●	●	◴	◝	◴	◴	◝	◝	◝	**63000 2RS**
16000	●	●	◴	◝	◴	◴	◴	●	●	**6200 2RS**
17000	●	●	◴	◝	◴	◴	◝	◝	◝	**62200 2RS**
16000	●	●	◴	◝	◴	◴	◴	●	●	**6300 2RS**
15000	●	●	◴	◝	◴	◴	◝	◝	◝	**62300 2RS**
19000	●	●	◴	◝	◴	◴	◝	◴	◴	**61801 2RS**
19000	◝	◝	◝	◝	◝	◝	◝	◝	◝	**63801 2RS**
18000	●	●	◴	◝	◴	◴	◝	◴	◴	**61901 2RS**
17000	●	●	◴	◝	◴	◴	◴	●	●	**6001 2RS**
17000	●	●	◴	◝	◴	◴	◝	◝	◝	**63001 2RS**
15000	●	●	◴	◝	◴	◴	◴	●	●	**6201 2RS**
15000	●	●	◴	◝	◴	◴	◝	◝	◝	**62201 2RS**
15000	●	●	◴	◝	◴	◴	◴	●	●	**6301 2RS**
14000	●	●	◴	◝	◴	◴	◝	◝	◝	**62301 2RS**
17000	●	●	◴	◝	◴	◴	◝	◴	◴	**61802 2RS**
16000	◝	◝	◝	◝	◝	◝	◝	◝	◝	**63802 2RS**
16000	●	●	◴	◝	◴	◴	◝	◴	◴	**61902 2RS**
14000	●	●	◴	◝	◴	◴	◴	●	●	**6002 2RS**
14000	●	●	◴	◝	◴	◴	◝	◝	◝	**63002 2RS**
13000	●	●	◴	◝	◴	◴	◴	●	●	**6202 2RS**
13000	●	●	◴	◝	◴	◴	◝	◝	◝	**62202 2RS**
15000	◝	◝	◝	◝	◝	◝	◝	◝	◝	**63202 2RS**
12000	●	●	◴	◝	◴	◴	◴	●	●	**6302 2RS**
12000	●	●	◴	◝	◴	◴	◝	◝	◝	**62302 2RS**
16000	●	●	◴	◝	◴	◴	◝	◴	◴	**61803 2RS**
14000	◝	◝	◝	◝	◝	◝	◝	◝	◝	**63803 2RS**
14000	●	●	◴	◝	◴	◴	◝	◴	◴	**61903 2RS**
12000	●	●	◴	◝	◴	◴	◴	●	●	**6003 2RS**
13000	●	●	◴	◝	◴	◴	◝	◝	◝	**63003 2RS**
12000	●	●	◴	◝	◴	◴	◴	●	●	**6203 2RS**
12000	●	●	◴	◝	◴	◴	◝	◝	◝	**62203 2RS**
12000	◝	◝	◝	◝	◝	◝	◝	◝	◝	**63203 2RS**
10000	●	●	◴	◝	◴	◴	◴	●	●	**6303 2RS**
11000	●	●	◴	◝	◴	◴	◝	◝	◝	**62303 2RS**
13000	●	●	◴	◝	◴	◴	◝	◴	◴	**61804 2RS**
12000	●	●	◴	◝	◴	◴	◝	◴	◴	**61904 2RS**
10000	●	●	◴	◝	◴	◴	◴	●	●	**6004 2RS**
11000	●	●	◴	◝	◴	◴	◝	◝	◝	**63004 2RS**
9700	●	●	◴	◝	◴	◴	◴	●	●	**6204 2RS**
10000	●	●	◴	◝	◴	◴	◝	◝	◝	**62204 2RS**
10000	◝	◝	◝	◝	◝	◝	◝	◝	◝	**63204 2RS**
9500	●	●	◴	◝	◴	◴	◴	●	●	**6304 2RS**
9500	●	●	◴	◝	◴	◴	◝	◝	◝	**62304 2RS**
10000	◝	◝	◝	◝	◝	◝	◝	◝	◝	**63304 2RS**
9900	●	●	◴	◝	◴	◴	◝	◴	◴	**60/22 2RS**
9700	●	●	◴	◝	◴	◴	◝	◴	◴	**62/22 2RS**
8600	●	●	◴	◝	◴	◴	◝	◴	◴	**63/22 2RS**

* Other products also available

https://nppnovoteh.com

1. RADIAL CONTACT DEEP-GROOVE BALL BEARINGS

1.3 Single-row deep-groove ball bearings
- dimensions from 10 mm – sealed RS



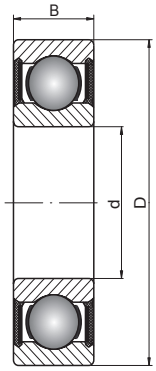

2RS

25 – 45 mm

Shaft [mm]	Bearing No.	Series		Dimensions [mm]			Weight [kg]	Basic load ratings [kN]	
		SD	SB	d	D	B		dyn. C	stat. C_0
25	**61805 2RS**	8	0	25	37	7	0,0220	4,36	2,6
	61905 2RS	9	0	25	42	9	0,0450	6,63	4
	6005 2RS	0	0	25	47	12	0,0800	11,2	6,55
	63005 2RS	0	3	25	47	16	0,1000	11,2	6,55
	6205 2RS	2	0	25	52	15	0,1300	14	7,8
	62205 2RS	2	2	25	52	18	0,1500	14	7,8
	63205 2RS	2	3	25	52	20,6	0,1770	14	7,85
	6305 2RS	3	0	25	62	17	0,2300	22,5	11,6
	62305 2RS	3	2	25	62	24	0,3260	22,5	11,6
	63305 2RS	3	3	25	62	25,4	0,3540	21,2	10,9
28	**60/28 2RS**	0	0	28	58	12	0,0970	12,4	7,4
	62/28 2RS	2	0	28	58	16	0,1730	17,9	9,75
	63/28 2RS	3	0	28	68	18	0,3280	23,5	13,1
30	**61806 2RS**	8	0	30	42	7	0,0270	4,49	2,9
	61906 2RS	9	0	30	47	9	0,0510	7,28	4,55
	6006 2RS	0	0	30	55	13	0,1200	13,3	8,3
	63006 2RS	0	3	30	55	19	0,1600	13,3	8,3
	6206 2RS	2	0	30	62	16	0,2000	19,5	11,2
	62206 2RS	2	2	30	62	20	0,2430	16,5	11,2
	63206 2RS	2	3	30	62	23,8	0,2860	19,5	11,3
	6306 2RS	3	0	30	72	19	0,3500	28,1	16
	62306 2RS	3	2	30	72	27	0,4930	28,1	16
	63306 2RS	3	3	30	72	30,2	0,5130	26,7	15
32	**60/32 2RS**	0	0	32	58	13	0,1270	15	9,15
	62/32 2RS	2	0	32	65	17	0,2280	23,5	13,1
	63/32 2RS	3	0	32	75	20	0,4370	30,1	16,2
35	**61807 2RS**	8	0	35	47	7	0,0300	4,75	3,2
	61907 2RS	9	0	35	55	10	0,0800	9,56	6,2
	6007 2RS	0	0	35	62	14	0,1600	15,9	10,2
	63007 2RS	0	3	35	62	20	0,2100	15,9	10,2
	6207 2RS	2	0	35	72	17	0,2900	25,5	15,3
	62207 2RS	2	2	35	72	23	0,3880	25,5	15,3
	63207 2RS	2	3	35	72	27	0,4350	25,7	15,3
	6307 2RS	3	0	35	80	21	0,4600	33,2	19
	62307 2RS	3	2	35	80	31	0,6800	33,2	19
	63307 2RS	3	3	35	80	34,9	0,7440	33,5	19,1
40	**61808 2RS**	8	0	40	52	7	0,0340	4,94	3,45
	61908 2RS	9	0	40	62	12	0,1200	13,8	9,3
	6008 2RS	0	0	40	68	15	0,1900	16,8	11,6
	63008 2RS	0	3	40	68	22	0,2600	16,8	11,6
	6208 2RS	2	0	40	80	18	0,3700	30,7	19
	62208 2RS	2	2	40	80	23	0,4710	30,7	19
	63208 2RS	2	3	40	80	30,2	0,5810	29,1	17,8
	6308 2RS	3	0	40	90	23	0,6300	41	24
	62308 2RS	3	2	40	90	33	0,8900	41	24
	63308 2RS	3	3	40	90	36,5	0,9340	40,5	24
45	**61809 2RS**	8	0	45	58	7	0,0400	6,05	4,3
	61909 2RS	9	0	45	68	12	0,1400	10,1	6,7
	6009 2RS	0	0	45	75	16	0,2500	20,8	14,6
	63009 2RS	0	3	45	75	23	0,3400	20,8	14,6

- warehouse - order - phone



Limiting speed [rpm]	Basic makes*									Bearing No.
grease	-	RS	TN	M	C3	C4	NR	P66	SS	
11000	●	●	◴	◝	◴	◴	◝	◴	◴	**61805 2RS**
10000	●	●	◴	◝	◴	◴	◝	◴	◴	**61905 2RS**
9000	●	●	◴	◝	◴	◴	◴	●	●	**6005 2RS**
9500	●	●	◴	◝	◴	◴	◝	◝	◝	**63005 2RS**
8400	●	●	◴	◝	◴	◴	◴	●	●	**6205 2RS**
8500	●	●	◴	◝	◴	◴	◝	◝	◝	**62205 2RS**
8900	◝	◝	◝	◝	◝	◝	◝	◝	◝	**63205 2RS**
7500	●	●	◴	◝	◴	◴	◴	●	●	**6305 2RS**
7500	●	●	◴	◝	◴	◴	◝	◝	◝	**62305 2RS**
8100	◝	◝	◝	◝	◝	◝	◝	◝	◝	**63305 2RS**
14000	●	●	◴	◝	◴	◴	◝	◴	◴	**60/28 2RS**
7600	●	●	◴	◝	◴	◴	◝	◴	◴	**62/28 2RS**
6900	●	●	◴	◝	◴	◴	◝	◴	◴	**63/28 2RS**
9500	●	●	◴	◝	◴	◴	◝	◴	◴	**61806 2RS**
8500	●	●	◴	◝	◴	◴	◝	◴	◴	**61906 2RS**
7500	●	●	◴	◝	◴	◴	◴	●	●	**6006 2RS**
8000	●	●	◴	◝	◴	◴	◝	◝	◝	**63006 2RS**
7000	●	●	◴	◝	◴	◴	◴	●	●	**6206 2RS**
7500	●	●	◴	◝	◴	◴	◝	◝	◝	**62206 2RS**
7300	◝	◝	◝	◝	◝	◝	◝	◝	◝	**63206 2RS**
6400	●	●	◴	◝	◴	◴	◴	●	●	**6306 2RS**
6300	●	●	◴	◝	◴	◴	◝	◝	◝	**62306 2RS**
6600	◝	◝	◝	◝	◝	◝	◝	◝	◝	**63306 2RS**
7200	●	●	◴	◝	◴	◴	◝	◴	◴	**60/32 2RS**
6900	●	●	◴	◝	◴	◴	◝	◴	◴	**62/32 2RS**
6400	●	●	◴	◝	◴	◴	◝	◴	◴	**63/32 2RS**
8000	●	●	◴	◝	◴	◴	◝	◴	◴	**61807 2RS**
7500	●	●	◴	◝	◴	◴	◝	◴	◴	**61907 2RS**
6500	●	●	◴	◝	◴	◴	◴	●	●	**6007 2RS**
7000	●	●	◴	◝	◴	◴	◝	◝	◝	**63007 2RS**
6000	●	●	◴	◝	◴	◴	◴	●	●	**6207 2RS**
6300	●	●	◴	◝	◴	◴	◝	◝	◝	**62207 2RS**
6300	◝	◝	◝	◝	◝	◝	◝	◝	◝	**63207 2RS**
5700	●	●	◴	◝	◴	◴	◴	●	●	**6307 2RS**
6000	●	●	◴	◝	◴	◴	◝	◝	◝	**62307 2RS**
6000	◝	◝	◝	◝	◝	◝	◝	◝	◝	**63307 2RS**
7500	●	●	◴	◝	◴	◴	◝	◴	◴	**61808 2RS**
6700	●	●	◴	◝	◴	◴	◝	◴	◴	**61908 2RS**
5800	●	●	◴	◝	◴	◴	◴	●	●	**6008 2RS**
6300	●	●	◴	◝	◴	◴	◝	◝	◝	**63008 2RS**
5400	●	●	◴	◝	◴	◴	◴	●	●	**6208 2RS**
5600	●	●	◴	◝	◴	◴	◝	◝	◝	**62208 2RS**
5600	◝	◝	◝	◝	◝	◝	◝	◝	◝	**63208 2RS**
5100	●	●	◴	◝	◴	◴	◴	●	●	**6308 2RS**
5000	●	●	◴	◝	◴	◴	◝	◝	◝	**62308 2RS**
5300	◝	◝	◝	◝	◝	◝	◝	◝	◝	**63308 2RS**
6700	●	●	◴	◝	◴	◴	◝	◴	◴	**61809 2RS**
6000	●	●	◴	◝	◴	◴	◝	◴	◴	**61909 2RS**
5300	●	●	◴	◝	◴	◴	◴	●	●	**6009 2RS**
5600	●	●	◴	◝	◴	◴	◝	◝	◝	**63009 2RS**

* Other products also available

https://nppnovoteh.com

1. RADIAL CONTACT DEEP-GROOVE BALL BEARINGS

1.3 Single-row deep-groove ball bearings
- dimensions from 10 mm – sealed RS



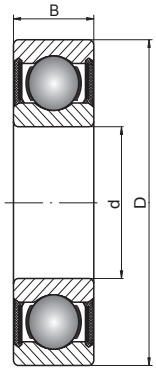

2RS

45 – 70 mm

Shaft [mm]	Bearing No.	Series		Dimensions [mm]			Weight [kg]	Basic load ratings [kN]	
		SD	SB	d	D	B		dyn. C	stat. C_0
45 cont.	**6209 2RS**	2	0	45	85	19	0,4100	33,2	21,6
	62209 2RS	2	2	45	85	23	0,5230	33,2	21,6
	63209 2RS	2	3	45	85	30,2	0,6210	32,5	20,4
	6309 2RS	3	0	45	100	25	0,8300	52,7	31,5
	62309 2RS	3	2	45	100	36	1,1900	52,7	31,5
	63309 2RS	3	3	45	100	39,7	1,3600	53	32
50	**61810 2RS**	8	0	50	65	7	0,0520	6,24	4,75
	61910 2RS	9	0	50	72	12	0,1400	14,6	10,4
	6010 2RS	0	0	50	80	16	0,2600	21,6	16
	63010 2RS	0	3	50	80	23	0,3700	21,6	16
	6210 2RS	2	0	50	90	20	0,4600	35,1	23,2
	62210 2RS	2	2	50	90	23	0,5500	35,1	23,2
	63210 2RS	2	3	50	90	30,2	0,6580	35	23,2
	6310 2RS	3	0	50	110	27	1,0500	61,8	38
	62310 2RS	3	2	50	110	40	1,5000	61,8	38
	63310 2RS	3	3	50	110	44,4	1,7000	62	38,5
55	**61811 2RS**	8	0	55	72	9	0,0830	8,32	6,2
	61911 2RS	9	0	55	80	13	0,1900	15,9	11,4
	6011 2RS	0	0	55	90	18	0,3900	28,1	21,2
	6211 2RS	2	0	55	100	21	0,6100	43,6	29
	62211 2RS	2	2	55	100	25	0,7000	43,6	29
	63211 2RS	2	3	55	100	33,3	0,9250	43,5	29,2
	6311 2RS	3	0	55	120	29	1,3500	71,5	45
	62311 2RS	3	2	55	120	43	1,9500	71,5	45
	63311 2RS	3	3	55	120	49,2	2,3200	71,5	45
60	**61812 2RS**	8	0	60	78	10	0,1100	8,71	6,7
	61912 2RS	9	0	60	85	13	0,2000	16,5	12
	6012 2RS	0	0	60	95	18	0,4200	29,6	23,2
	6212 2RS	2	0	60	110	22	0,7800	47,5	32,5
	62212 2RS	2	2	60	110	28	0,9700	47,5	32,5
	63212 2RS	2	3	60	110	36,5	1,2700	52,5	36
	6312 2RS	3	0	60	130	31	1,7000	81,9	52
	62312 2RS	3	2	60	130	46	2,5000	81,9	52
	63312 2RS	3	3	60	130	54	2,9500	82	52
65	**61813 2RS**	8	0	65	85	10	0,1260	11,9	11,5
	61913 2RS	9	0	65	90	13	0,2110	17,4	16,1
	6013 2RS	0	0	65	100	18	0,4400	30,7	25
	6213 2RS	2	0	65	120	23	0,9900	55,9	40,5
	62213 2RS	2	2	65	120	31	1,2500	55,9	40,5
	63213 2RS	2	3	65	120	38,1	1,5800	57,5	40
	6313 2RS	3	0	65	140	33	2,1000	92,3	60
	62313 2RS	3	2	65	140	48	3,0000	92,3	60
	63313 2RS	3	3	65	140	58,7	3,7100	92,5	60
70	**61814 2RS**	8	0	70	90	10	0,1340	12,1	11,9
	61914 2RS	9	0	70	100	16	0,3420	23,7	21,2
	6014 2RS	0	0	70	110	20	0,6000	37,7	31
	6214 2RS	2	0	70	125	24	1,1000	60,5	45
	62214 2RS	2	2	70	125	31	1,3000	60,5	45
	63214 2RS	2	3	70	125	39,7	1,7400	62	44
	6314 2RS	3	0	70	150	35	2,5000	104	68
	62314 2RS	3	2	70	150	51	3,5500	104	68

- warehouse - order - phone



Limiting speed [rpm]	Basic makes*									Bearing No.
grease	-	RS	TN	M	C3	C4	NR	P66	SS	
5100	●	●	◴	◝	◴	◴	◴	●	●	**6209 2RS**
5000	●	●	◴	◝	◴	◴	◝	◝	◝	**62209 2RS**
5200	◝	◝	◝	◝	◝	◝	◝	◝	◝	**63209 2RS**
4500	●	●	◴	◝	◴	◴	◴	●	●	**6309 2RS**
4500	●	●	◴	◝	◴	◴	◝	◝	◝	**62309 2RS**
4700	◝	◝	◝	◝	◝	◝	◝	◝	◝	**63309 2RS**
6000	●	●	◴	◝	◴	◴	◝	◴	◴	**61810 2RS**
5600	●	●	◴	◝	◴	◴	◝	◴	◴	**61910 2RS**
4800	●	●	◴	◝	◴	◴	◴	●	●	**6010 2RS**
5000	●	●	◴	◝	◴	◴	◝	◝	◝	**63010 2RS**
4600	●	●	◴	◝	◴	◴	◴	●	●	**6210 2RS**
4800	●	●	◴	◝	◴	◴	◝	◝	◝	**62210 2RS**
4700	◝	◝	◝	◝	◝	◝	◝	◝	◝	**63210 2RS**
4100	●	●	◴	◝	◴	◴	◴	●	●	**6310 2RS**
4300	●	●	◴	◝	◴	◴	◝	◝	◝	**62310 2RS**
4200	◝	◝	◝	◝	◝	◝	◝	◝	◝	**63310 2RS**
5300	●	●	◴	◴	◴	◴	◝	◴	◝	**61811 2RS**
5000	●	●	◴	◴	◴	◴	◝	◝	◝	**61911 2RS**
4300	●	●	◴	◴	◴	◴	◴	◴	◴	**6011 2RS**
4100	●	●	◴	◴	◴	◴	◴	◴	◴	**6211 2RS**
4300	●	●	◴	◝	◴	◴	◝	◝	◝	**62211 2RS**
4300	◝	◝	◝	◝	◝	◝	◝	◝	◝	**63211 2RS**
3700	●	●	◴	◴	◴	◴	◴	◴	◴	**6311 2RS**
3800	●	●	◴	◝	◴	◴	◝	◝	◝	**62311 2RS**
3900	◝	◝	◝	◝	◝	◝	◝	◝	◝	**63311 2RS**
4800	●	●	◴	◴	◴	◴	◝	◴	◝	**61812 2RS**
4500	●	●	◴	◴	◴	◴	◝	◝	◝	**61912 2RS**
4000	●	●	◴	◴	◴	◴	◴	◴	◴	**6012 2RS**
3700	●	●	◴	◴	◴	◴	◴	◴	◴	**6212 2RS**
4000	●	●	◴	◝	◴	◴	◝	◝	◝	**62212 2RS**
3800	◝	◝	◝	◝	◝	◝	◝	◝	◝	**63212 2RS**
3500	●	●	◴	◴	◴	◴	◴	◴	◴	**6312 2RS**
3400	●	●	◴	◝	◴	◴	◝	◝	◝	**62312 2RS**
3600	◝	◝	◝	◝	◝	◝	◝	◝	◝	**63312 2RS**
4500	●	●	◴	◴	◴	◴	◝	◴	◝	**61813 2RS**
4300	●	●	◴	◴	◴	◴	◝	◝	◝	**61913 2RS**
3700	●	●	◴	◴	◴	◴	◴	◴	◴	**6013 2RS**
3500	●	●	◴	◴	◴	◴	◴	◴	◴	**6213 2RS**
3600	●	●	◴	◝	◴	◴	◝	◝	◝	**62213 2RS**
3600	◝	◝	◝	◝	◝	◝	◝	◝	◝	**63213 2RS**
3200	●	●	◴	◴	◴	◴	◴	◴	◴	**6313 2RS**
3200	●	●	◴	◝	◴	◴	◝	◝	◝	**62313 2RS**
3300	◝	◝	◝	◝	◝	◝	◝	◝	◝	**63313 2RS**
4300	●	●	◴	◴	◴	◴	◝	◴	◝	**61814 2RS**
4000	●	●	◴	◴	◴	◴	◝	◝	◝	**61914 2RS**
3500	●	●	◴	◴	◴	◴	◴	◴	◴	**6014 2RS**
3300	●	●	◴	◴	◴	◴	◴	◴	◴	**6214 2RS**
3400	●	●	◴	◝	◴	◴	◝	◝	◝	**62214 2RS**
3400	◝	◝	◝	◝	◝	◝	◝	◝	◝	**63214 2RS**
3000	●	●	◴	◴	◴	◴	◴	◴	◴	**6314 2RS**
3000	●	●	◴	◝	◴	◴	◝	◝	◝	**62314 2RS**

* Other products also available

https://nppnovoteh.com

1. RADIAL CONTACT DEEP-GROOVE BALL BEARINGS

1.3 Single-row deep-groove ball bearings
- dimensions from 10 mm – sealed RS



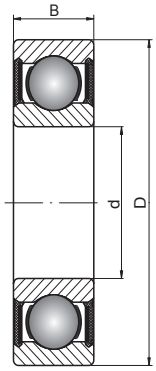

2RS

70 – 140 mm

Shaft [mm]	Bearing No.	Series		Dimensions [mm]			Weight [kg]	Basic load ratings [kN]	
		SD	SB	d	D	B		dyn. C	stat. C_0
70 cont.	**63314 2RS**	3	3	70	150	63,5	4,7600	104	68
75	**61815 2RS**	8	0	75	95	10	0,1420	12,5	12,9
	61915 2RS	9	0	75	105	16	0,3630	24,4	22,6
	6015 2RS	0	0	75	115	20	0,6400	39,7	33,5
	6215 2RS	2	0	75	130	25	1,2000	66,3	49
	63215 2RS	2	3	75	130	41,3	1,9000	66	49,5
	6315 2RS	3	0	75	160	37	3,0000	111,4	76,5
	63315 2RS	3	3	75	160	68,3	5,6700	113	77
80	**61816 2RS**	8	0	80	100	10	0,1500	12,7	13,3
	61916 2RS	9	0	80	110	16	0,3820	25	24
	6016 2RS	0	0	80	125	22	0,8500	47,5	40
	6216 2RS	2	0	80	140	26	1,4000	70,2	55
	63216 2RS	2	3	80	140	44,4	2,3900	72,5	53
	6316 2RS	3	0	80	170	39	3,6000	124	86,5
	63316 2RS	3	3	80	170	68,3	6,3900	123	86,5
85	**61817 2RS**	8	0	85	110	13	0,2660	18,7	19
	6017 2RS	0	0	85	130	22	0,8900	49,4	43
	6217 2RS	2	0	85	150	28	1,8000	83,2	64
	6317 2RS	3	0	85	180	41	4,2500	133	96,5
	63317 2RS	3	3	85	180	73	7,6500	133	97
90	**61818 2RS**	8	0	90	115	13	0,2790	19	19,7
	6018 2RS	0	0	90	140	24	1,1500	58,5	50
	6218 2RS	2	0	90	160	30	2,1500	95,6	73,5
	6318 2RS	3	0	90	190	43	4,9000	143	108
	63318 2RS	3	3	90	190	73	8,5000	143	107
95	**61819 2RS**	8	0	95	120	13	0,3000	19,9	17,6
	6019 2RS	0	0	95	145	24	1,2000	60,5	54
	6219 2RS	2	0	95	170	32	2,6000	108	81,5
	6319 2RS	3	0	95	200	45	5,6500	153	118
100	**61820 2RS**	8	0	100	125	13	0,3090	19,6	21,2
	6020 2RS	0	0	100	150	24	1,2500	60,5	54
	6220 2RS	2	0	100	180	34	3,1500	124	93
	6320 2RS	3	0	100	215	47	7,5600	174	140
105	**61821 2RS**	8	0	105	130	13	0,3200	20,8	19,6
	6021 2RS	0	0	105	160	26	1,6000	72,8	65,5
	6221 2RS	2	0	105	190	36	3,7000	133	105
110	**61822 2RS**	8	0	110	140	16	0,6060	28,1	30,7
	6022 2RS	0	0	110	170	28	1,9500	81,9	73,5
	6222 2RS	2	0	110	200	38	4,3600	144	117
120	**61824 2RS**	8	0	120	150	16	0,6550	29	33
	6024 2RS	0	0	120	180	28	2,0700	85	79,3
	6224 2RS	2	0	120	215	40	5,1500	155	131
130	**61826 2RS**	8	0	130	165	18	0,9390	36,9	41,2
	6026 2RS	0	0	130	200	33	3,1600	106	101
140	**61828 2RS**	8	0	140	175	18	1,0000	38,2	44,4

- warehouse - order - phone



Limiting speed [rpm]	Basic makes*									Bearing No.
grease	-	RS	TN	M	C3	C4	NR	P66	SS	
3100	●	●	●	●	●	●	●	●	●	**63314 2RS**
4000	■	■	◴	◴	◴	◴	●	●	●	**61815 2RS**
3600	■	■	◴	◴	◴	◴	●	●	●	**61915 2RS**
3300	■	■	◴	◴	◴	◴	◴	◴	◴	**6015 2RS**
3100	■	■	◴	◴	◴	◴	◴	◴	◴	**6215 2RS**
3200	●	●	●	●	●	●	●	●	●	**63215 2RS**
2800	■	■	◴	◴	◴	◴	◴	◴	◴	**6315 2RS**
2900	●	●	●	●	●	●	●	●	●	**63315 2RS**
3600	■	■	◴	◴	◴	◴	●	●	●	**61816 2RS**
3400	■	■	◴	◴	◴	◴	●	●	●	**61916 2RS**
3100	■	■	◴	◴	◴	◴	◴	◴	◴	**6016 2RS**
2900	■	■	◴	◴	◴	◴	◴	◴	◴	**6216 2RS**
3000	●	●	●	●	●	●	●	●	●	**63216 2RS**
2700	■	■	◴	◴	◴	◴	◴	◴	◴	**6316 2RS**
2700	●	●	●	●	●	●	●	●	●	**63316 2RS**
3400	■	■	◴	◴	◴	◴	●	●	●	**61817 2RS**
2900	■	■	◴	◴	◴	◴	◴	◴	◴	**6017 2RS**
2700	■	■	◴	◴	◴	◴	◴	◴	◴	**6217 2RS**
2500	■	■	◴	◴	◴	◴	◴	◴	◴	**6317 2RS**
2600	●	●	●	●	●	●	●	●	●	**63317 2RS**
3200	■	■	◴	◴	◴	◴	●	●	●	**61818 2RS**
2700	■	■	◴	◴	◴	◴	◴	◴	◴	**6018 2RS**
2600	■	■	◴	◴	◴	◴	◴	◴	◴	**6218 2RS**
2400	■	■	◴	◴	◴	◴	◴	◴	◴	**6318 2RS**
2400	●	●	●	●	●	●	●	●	●	**63318 2RS**
3000	■	■	◴	◴	◴	◴	●	●	●	**61819 2RS**
2500	■	■	◴	◴	◴	◴	◴	◴	◴	**6019 2RS**
2400	■	■	◴	◴	◴	◴	◴	◴	◴	**6219 2RS**
2200	■	■	◴	◴	◴	◴	◴	◴	◴	**6319 2RS**
3000	■	■	◴	◴	◴	◴	●	●	●	**61820 2RS**
2500	■	■	◴	◴	◴	◴	◴	◴	◴	**6020 2RS**
2300	■	■	◴	◴	◴	◴	◴	◴	◴	**6220 2RS**
2100	■	■	◴	◴	◴	◴	◴	◴	◴	**6320 2RS**
2800	■	■	◴	◴	◴	◴	●	●	●	**61821 2RS**
2300	■	■	◴	◴	◴	◴	◴	●	●	**6021 2RS**
2200	■	■	◴	◴	◴	◴	◴	●	●	**6221 2RS**
2600	■	■	◴	◴	◴	◴	●	●	●	**61822 2RS**
2200	■	■	◴	◴	◴	◴	◴	●	●	**6022 2RS**
2000	■	■	◴	◴	◴	◴	◴	●	●	**6222 2RS**
2400	■	■	◴	◴	◴	◴	●	●	●	**61824 2RS**
2100	■	■	◴	◴	◴	◴	◴	●	●	**6024 2RS**
1900	■	■	◴	◴	◴	◴	◴	●	●	**6224 2RS**
2200	■	■	◴	◴	◴	◴	●	●	●	**61826 2RS**
1900	■	■	◴	◴	◴	◴	◴	●	●	**6026 2RS**
2000	■	■	◴	◴	◴	◴	●	●	●	**61828 2RS**

* Other products also available

1. RADIAL CONTACT DEEP-GROOVE BALL BEARINGS

1.3 Single-row deep-groove ball bearings
- dimensions from 10 mm – sealed RS



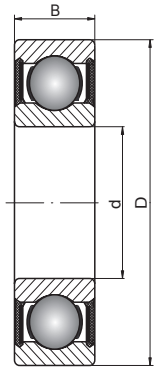

2RS

140 – 160 mm

Shaft [mm]	Bearing No.	Series		Dimensions [mm]			Weight [kg]	Basic load ratings [kN]	
		SD	SB	d	D	B		dyn. C	stat. C_0
140 cont.	**6028 2RS**	0	0	140	210	33	3,5500	110	109
150	**6030 2RS**	0	0	150	225	35	4,2200	125	126
160	**6032 2RS**	0	0	160	240	38	5,2200	136	135

- warehouse - order - phone



Limiting speed [rpm]	Basic makes*									Bearing No.
grease	-	RS	TN	M	C3	C4	NR	P66	SS	
1800	●	●	◴	◴	◴	◴	◴	↘	↘	**6028 2RS**
1600	●	●	◴	◴	◴	◴	◴	↘	↘	**6030 2RS**
1500	●	●	◴	◴	◴	◴	◴	↘	↘	**6032 2RS**

* Other products also available

https://nppnovoteh.com

1. RADIAL CONTACT DEEP-GROOVE BALL BEARINGS

1.4 Single-row deep-groove ball bearings
- dimensions from 10 mm – sealed ZZ



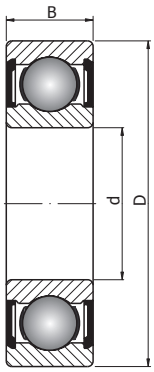

ZZ

10 – 30 mm

Shaft [mm]	Bearing No.	Series		Dimensions [mm]			Weight [kg]	Basic load ratings [kN]	
		SD	SB	d	D	B		dyn. C	stat. C_0
10	**61800 ZZ**	8	0	10	19	5	0,0055	1,38	0,585
	63800 ZZ	8	3	10	19	7	0,025	1,72	0,84
	61900 ZZ	9	0	10	22	6	0,01	1,95	0,75
	6000 ZZ	0	0	10	26	8	0,019	4,62	1,96
	6200 ZZ	2	0	10	30	9	0,032	5,07	2,36
	6300 ZZ	3	0	10	35	11	0,053	8,06	3,4
12	**61801 ZZ**	8	0	12	21	5	0,0063	1,43	0,67
	63801 ZZ	8	3	12	21	7	0,07	1,92	1,035
	61901 ZZ	9	0	12	24	6	0,011	2,25	0,98
	16001 ZZ	0	-1	12	28	7	0,022	5,1	2,39
	6001 ZZ	0	0	12	28	8	0,022	5,07	2,36
	6201 ZZ	2	0	12	32	10	0,037	6,89	3,1
	6301 ZZ	3	0	12	37	12	0,06	9,75	4,15
15	**61802 ZZ**	8	0	15	24	5	0,0074	1,56	0,8
	63802 ZZ	8	3	15	24	7	0,07	2,08	1,255
	61902 ZZ	9	0	15	28	7	0,016	4,03	2,04
	16002 ZZ	0	-1	15	32	8	0,025	5,59	2,85
	6002 ZZ	0	0	15	32	9	0,03	5,59	2,85
	6202 ZZ	2	0	15	35	11	0,045	7,8	3,75
	63202 ZZ	2	3	15	35	15,9	0,065	7,75	3,6
	6302 ZZ	3	0	15	42	13	0,082	11,4	5,4
17	**61803 ZZ**	8	0	17	26	5	0,0082	1,68	0,93
	63803 ZZ	8	3	17	26	7	0,08	2,23	1,45
	61903 ZZ	9	0	17	30	7	0,018	4,36	2,32
	16003 ZZ	0	-1	17	35	8	0,032	6,05	3,25
	6003 ZZ	0	0	17	35	10	0,039	6,05	3,25
	6203 ZZ	2	0	17	40	12	0,065	9,56	4,75
	63203 ZZ	2	3	17	40	17,5	0,093	9,6	4,6
	6303 ZZ	3	0	17	47	14	0,12	135	6,55
	6403 ZZ	4	0	17	62	17	0,27	22,9	10,8
20	**61804 ZZ**	8	0	20	32	7	0,018	2,7	1,5
	61904 ZZ	9	0	20	37	9	0,038	6,37	3,65
	16004 ZZ	0	-1	20	42	8	0,05	6,89	4,05
	6004 ZZ	0	0	20	42	12	0,069	9,36	5
	6204 ZZ	2	0	20	47	14	0,11	12,7	6,55
	63204 ZZ	2	3	20	47	20,6	0,154	12,8	6,65
	6304 ZZ	3	0	20	52	15	0,14	15,9	7,8
	63304 ZZ	3	3	20	52	22,2	0,213	15,9	7,9
	6404 ZZ	4	0	20	72	19	0,4	30,7	15
25	**61805 ZZ**	8	0	25	37	7	0,022	4,36	2,6
	61905 ZZ	9	0	25	42	9	0,045	6,63	4
	16005 ZZ	0	-1	25	47	8	0,06	7,61	4,75
	6005 ZZ	0	0	25	47	12	0,08	11,2	6,55
	6205 ZZ	2	0	25	52	15	0,13	14	7,8
	63205 ZZ	2	3	25	52	20,6	0,177	14	7,85
	6305 ZZ	3	0	25	62	17	0,23	22,5	11,6
	63305 ZZ	3	3	25	62	25,4	0,354	21,2	10,9
	6405 ZZ	4	0	25	80	21	0,53	35,8	19,3
30	**61806 ZZ**	8	0	30	42	7	0,027	4,49	2,9
	61906 ZZ	9	0	30	47	9	0,051	7,28	4,55

- warehouse - order - phone



Limiting speed [rpm]		Basic makes*									Bearing No.
grease	oil	-	Z	M	TN	NR	C3	C4	P66	SS	
32000	38000										61800 ZZ
34000	40800										63800 ZZ
30000	36000										61900 ZZ
29000	34000										6000 ZZ
25000	30000										6200 ZZ
23000	27000										6300 ZZ
29000	35000										61801 ZZ
30500	36600										63801 ZZ
27000	32000										61901 ZZ
26000	30000										16001 ZZ
26000	30000										6001 ZZ
22000	26000										6201 ZZ
20000	24000										6301 ZZ
26000	31000										61802 ZZ
26000	31500										63802 ZZ
24000	28000										61902 ZZ
22000	26000										16002 ZZ
22000	26000										6002 ZZ
19000	23000										6202 ZZ
19000	-										63202 ZZ
17000	21000										6302 ZZ
24000	28000										61803 ZZ
23000	27600										63803 ZZ
22000	26000										61903 ZZ
20000	24000										16003 ZZ
20000	24000										6003 ZZ
18000	21000										6203 ZZ
18000	-										63203 ZZ
16000	19000										6303 ZZ
14000	16000										6403 ZZ
21000	25000										61804 ZZ
19000	23000										61904 ZZ
18000	21000										16004 ZZ
18000	21000										6004 ZZ
16000	18000										6204 ZZ
16000	-										63204 ZZ
14000	17000										6304 ZZ
14000	-										63304 ZZ
12000	14000										6404 ZZ
18000	21000										61805 ZZ
16000	19000										61905 ZZ
15000	18000										16005 ZZ
15000	18000										6005 ZZ
13000	7850										6205 ZZ
13000	-										63205 ZZ
12000	14000										6305 ZZ
12000	-										63305 ZZ
10000	12000										6405 ZZ
15000	18000										61806 ZZ
14000	17000										61906 ZZ

* Other products also available

https://nppnovoteh.com

1. RADIAL CONTACT DEEP-GROOVE BALL BEARINGS

1.4 Single-row deep-groove ball bearings
- dimensions from 10 mm – sealed ZZ



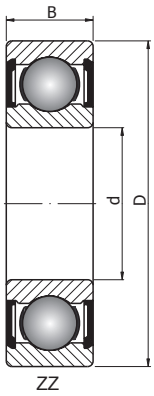

ZZ

30 – 55 mm

Shaft [mm]	Bearing No.	Series		Dimensions [mm]			Weight [kg]	Basic load ratings [kN]	
		SD	SB	d	D	B		dyn. C	stat. C_0
30 cont.	**16006 ZZ**	0	-1	30	55	9	0,085	11,2	7,35
	6006 ZZ	0	0	30	55	13	0,12	13,3	8,3
	6206 ZZ	2	0	30	62	16	0,2	19,5	11,2
	63206 ZZ	2	3	30	62	23,8	0,286	19,5	11,3
	6306 ZZ	3	0	30	72	19	0,35	28,1	16
	63306 ZZ	3	3	30	72	30,2	0,513	26,7	15
	6406 ZZ	4	0	30	90	23	0,74	43,6	23,6
35	**61807 ZZ**	8	0	35	47	7	0,03	4,75	3,2
	61907 ZZ	9	0	35	55	10	0,08	9,56	6,2
	16007 ZZ	0	-1	35	62	9	0,11	12,4	8,15
	6007 ZZ	0	0	35	62	14	0,16	15,9	10,2
	6207 ZZ	2	0	35	72	17	0,29	25,5	15,3
	63207 ZZ	2	3	35	72	27	0,435	25,7	15,3
	6307 ZZ	3	0	35	80	21	0,46	33,2	19
	63307 ZZ	3	3	35	80	34,9	0,744	33,5	19,1
	6407 ZZ	4	0	35	100	25	0,95	55,3	31
40	**61808 ZZ**	8	0	40	52	7	0,034	4,94	3,45
	61908 ZZ	9	0	40	62	12	0,12	13,8	9,3
	16008 ZZ	0	-1	40	68	9	0,13	13,3	9,15
	6008 ZZ	0	0	40	68	15	0,19	16,8	11,6
	6208 ZZ	2	0	40	80	18	0,37	30,7	19
	63208 ZZ	2	3	40	80	30,2	0,581	29,1	17,8
	6308 ZZ	3	0	40	90	23	0,63	41	24
	63308 ZZ	3	3	40	90	36,5	0,934	40,5	24
	6408 ZZ	4	0	40	110	27	1,25	63,7	36,5
45	**61809 ZZ**	8	0	45	58	7	0,04	6,05	4,3
	61909 ZZ	9	0	45	68	12	0,14	10,1	6,7
	16009 ZZ	0	-1	45	75	10	0,17	15,6	10,8
	6009 ZZ	0	0	45	75	16	0,25	20,8	14,6
	6209 ZZ	2	0	45	85	19	0,41	33,2	21,6
	63209 ZZ	2	3	45	85	30,2	0,621	32,5	20,4
	6309 ZZ	3	0	45	100	25	0,83	52,7	31,5
	63309 ZZ	3	3	45	100	39,7	1,36	53	32
	6409 ZZ	4	0	45	120	29	1,55	76,1	45
50	**61810 ZZ**	8	0	50	65	7	0,052	6,24	4,75
	61910 ZZ	9	0	50	72	12	0,14	14,6	10,4
	16010 ZZ	0	-1	50	80	10	0,18	16,3	11,4
	6010 ZZ	0	0	50	80	16	0,26	21,6	16
	6210 ZZ	2	0	50	90	20	0,46	35,1	23,2
	63210 ZZ	2	3	50	90	30,2	0,658	35	23,2
	6310 ZZ	3	0	50	110	27	1,05	61,8	38
	63310 ZZ	3	3	50	110	44,4	1,7	62	38,5
	6410 ZZ	4	0	50	130	31	1,9	87,1	52
55	**61811 ZZ**	8	0	55	72	9	0,083	8,32	6,2
	61911 ZZ	9	0	55	80	13	0,19	15,9	11,4
	6011 ZZ	0	0	55	90	18	0,39	28,1	21,2
	6211 ZZ	2	0	55	100	21	0,61	43,6	29
	63211 ZZ	2	3	55	100	33,3	0,925	43,5	29,2
	6311 ZZ	3	0	55	120	29	1,35	71,5	45
	63311 ZZ	3	3	55	120	49,2	2,32	71,5	45

- warehouse - order - phone



Limiting speed [rpm]		Basic makes*									Bearing No.
grease	oil	-	Z	M	TN	NR	C3	C4	P66	SS	
13000	15000	●	●	◔	◔	◔	◔	◔	◔	◔	**16006 ZZ**
13000	15000	●	●	◔	◔	◔	●	◔	●	●	**6006 ZZ**
11000	13000	●	●	◔	◔	◔	●	◔	●	●	**6206 ZZ**
11000	-	◔	◔	◔	◔	◔	◔	◔	◔	◔	**63206 ZZ**
10000	12000	●	●	◔	◔	◔	●	◔	●	●	**6306 ZZ**
10000	-	◔	◔	◔	◔	◔	◔	◔	◔	◔	**63306 ZZ**
8800	10000	●	●	◔	◔	◔	◔	◔	●	◔	**6406 ZZ**
13000	16000	●	●	◔	◔	◔	◔	◔	◔	◔	**61807 ZZ**
12000	15000	●	●	◔	◔	◔	◔	◔	◔	◔	**61907 ZZ**
12000	14000	●	●	◔	◔	◔	◔	◔	◔	◔	**16007 ZZ**
12000	14000	●	●	◔	◔	◔	●	◔	●	●	**6007 ZZ**
9800	11000	●	●	◔	◔	◔	●	◔	●	●	**6207 ZZ**
9800	-	◔	◔	◔	◔	◔	◔	◔	◔	◔	**63207 ZZ**
8800	10000	●	●	◔	◔	◔	●	◔	●	●	**6307 ZZ**
8800	-	◔	◔	◔	◔	◔	◔	◔	◔	◔	**63307 ZZ**
7800	9100	●	●	◔	◔	◔	◔	◔	●	◔	**6407 ZZ**
12000	14000	●	●	◔	◔	◔	◔	◔	◔	◔	**61808 ZZ**
11000	13000	●	●	◔	◔	◔	◔	◔	◔	◔	**61908 ZZ**
10000	12000	●	●	◔	◔	◔	◔	◔	◔	◔	**16008 ZZ**
10000	12000	●	●	◔	◔	◔	●	◔	●	●	**6008 ZZ**
8700	10000	●	●	◔	◔	◔	●	◔	●	●	**6208 ZZ**
8700	-	◔	◔	◔	◔	◔	◔	◔	◔	◔	**63208 ZZ**
7800	9200	●	●	◔	◔	◔	●	◔	●	●	**6308 ZZ**
7800	-	◔	◔	◔	◔	◔	◔	◔	◔	◔	**63308 ZZ**
7000	8200	●	●	◔	◔	◔	◔	◔	●	◔	**6408 ZZ**
11000	12000	●	●	◔	◔	◔	◔	◔	◔	◔	**61809 ZZ**
9800	12000	●	●	◔	◔	◔	◔	◔	◔	◔	**61909 ZZ**
9200	11000	●	●	◔	◔	◔	◔	◔	◔	◔	**16009 ZZ**
9200	11000	●	●	◔	◔	◔	●	◔	●	●	**6009 ZZ**
7800	9200	●	●	◔	◔	◔	●	◔	●	●	**6209 ZZ**
7800	-	◔	◔	◔	◔	◔	◔	◔	◔	◔	**63209 ZZ**
7000	8200	●	●	◔	◔	◔	●	◔	●	●	**6309 ZZ**
7000	-	◔	◔	◔	◔	◔	◔	◔	◔	◔	**63309 ZZ**
6300	7400	●	●	◔	◔	◔	◔	◔	●	◔	**6409 ZZ**
9600	11000	●	●	◔	◔	◔	◔	◔	◔	◔	**61810 ZZ**
8900	11000	●	●	◔	◔	◔	◔	◔	◔	◔	**61910 ZZ**
8400	9800	●	●	◔	◔	◔	◔	◔	◔	◔	**16010 ZZ**
8400	9800	●	●	◔	◔	◔	●	◔	●	●	**6010 ZZ**
7100	8300	●	●	◔	◔	◔	●	◔	●	●	**6210 ZZ**
7100	-	◔	◔	◔	◔	◔	◔	◔	◔	◔	**63210 ZZ**
6400	4200	●	●	◔	◔	◔	●	◔	●	●	**6310 ZZ**
6400	-	◔	◔	◔	◔	◔	◔	◔	◔	◔	**63310 ZZ**
5700	6700	●	●	◔	◔	◔	◔	◔	●	◔	**6410 ZZ**
8700	10000	●	●	◔	◔	◔	◔	◔	◔	◔	**61811 ZZ**
8200	9600	●	●	◔	◔	◔	◔	◔	◔	◔	**61911 ZZ**
7700	9000	●	●	◔	◔	◔	◔	◔	◔	◔	**6011 ZZ**
6400	7600	●	●	◔	◔	◔	◔	◔	◔	◔	**6211 ZZ**
6400	-	◔	◔	◔	◔	◔	◔	◔	◔	◔	**63211 ZZ**
5800	6800	●	●	◔	◔	◔	◔	◔	◔	◔	**6311 ZZ**
5800	-	◔	◔	◔	◔	◔	◔	◔	◔	◔	**63311 ZZ**

* Other products also available

https://nppnovoteh.com

1. RADIAL CONTACT DEEP-GROOVE BALL BEARINGS

1.4 Single-row deep-groove ball bearings
- dimensions from 10 mm – sealed ZZ



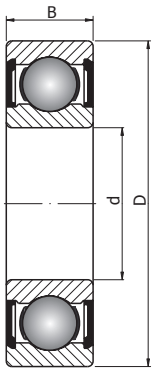

ZZ

60 – 95 mm

Shaft [mm]	Bearing No.	Series		Dimensions [mm]			Weight [kg]	Basic load ratings [kN]	
		SD	SB	d	D	B		dyn. C	stat. C_0
60	**61812 ZZ**	8	0	60	78	10	0,11	8,71	6,7
	61912 ZZ	9	0	60	85	13	0,2	16,5	12
	6012 ZZ	0	0	60	95	18	0,42	29,6	23,2
	6212 ZZ	2	0	60	110	22	0,78	47,5	32,5
	63212 ZZ	2	3	60	110	36,5	1,27	52,5	36
	6312 ZZ	3	0	60	130	31	1,7	81,9	52
	63312 ZZ	3	3	60	130	54	2,95	82	52
65	**61813 ZZ**	8	0	65	85	10	0,125	12	11,5
	61913 ZZ	9	0	65	90	13	0,2	17,4	16
	6013 ZZ	0	0	65	100	18	0,44	30,7	25
	6213 ZZ	2	0	65	120	23	0,99	55,9	40,5
	63213 ZZ	2	3	65	120	38,1	1,58	57,5	40
	6313 ZZ	3	0	65	140	33	2,1	92,3	60
	63313 ZZ	3	3	65	140	58,7	3,71	92,5	60
70	**61814 ZZ**	8	0	70	90	10	0,135	12,1	11,9
	61914 ZZ	9	0	70	100	16	0,327	23,5	21,1
	6014 ZZ	0	0	70	110	20	0,6	37,7	31
	6214 ZZ	2	0	70	125	24	1,1	60,5	45
	63214 ZZ	2	3	70	125	39,7	1,74	62	44
	6314 ZZ	3	0	70	150	35	2,5	104	68
	63314 ZZ	3	3	70	150	63,5	4,76	104	68
75	**61815 ZZ**	8	0	75	95	10	0,145	12,5	12,8
	61915 ZZ	9	0	75	105	16	0,345	23,8	23,8
	6015 ZZ	0	0	75	115	20	0,64	39,7	33,5
	6215 ZZ	2	0	75	130	25	1,2	66,3	49
	63215 ZZ	2	3	75	130	41,3	1,9	66	49,5
	6315 ZZ	3	0	75	160	37	3	111,4	76,5
	63315 ZZ	3	3	75	160	68,3	5,67	113	77
80	**61816 ZZ**	8	0	80	100	10	0,155	12,7	13,3
	61916 ZZ	9	0	80	110	16	0,363	27,6	25,3
	6016 ZZ	0	0	80	125	22	0,85	47,5	40
	6216 ZZ	2	0	80	140	26	1,4	70,2	55
	63216 ZZ	2	3	80	140	44,4	2,39	72,5	53
	6316 ZZ	3	0	80	170	39	3,6	124	86,5
	63316 ZZ	3	3	80	170	68,3	6,39	123	86,5
85	**61817 ZZ**	8	0	85	110	13	0,265	19,3	19,8
	61917 ZZ	9	0	85	120	18	0,517	32	29,6
	6017 ZZ	0	0	85	130	22	0,89	49,4	43
	6217 ZZ	2	0	85	150	28	1,8	83,2	64
	6317 ZZ	3	0	85	180	41	4,25	133	96,5
	63317 ZZ	3	3	85	180	73	7,65	133	97
90	**61818 ZZ**	8	0	90	115	13	0,28	19	19,7
	61918 ZZ	9	0	90	125	18	0,54	33	31,5
	6018 ZZ	0	0	90	140	24	1,15	58,5	50
	6218 ZZ	2	0	90	160	30	2,15	95,6	73,5
	6318 ZZ	3	0	90	190	43	4,9	143	108
	63318 ZZ	3	3	90	190	73	8,5	143	107
95	**61819 ZZ**	8	0	95	120	13	0,298	19,3	20,5
	61919 ZZ	9	0	95	130	18	0,567	33,5	33,5

- warehouse - order - phone



Limiting speed [rpm]		Basic makes*									Bearing No.
grease	oil	-	Z	M	TN	NR	C3	C4	P66	SS	
8000	9400	●	●	◴	◝	◝	◴	◴	◴	◝	**61812 ZZ**
7600	8900	●	●	◴	◝	◝	◴	◴	◴	◝	**61912 ZZ**
7000	8300	●	●	◴	◝	◴	◴	◴	◴	◴	**6012 ZZ**
6000	7000	●	●	◴	◝	◴	◴	◴	◴	◴	**6212 ZZ**
6000	-	◝	◝	◝	◝	◝	◝	◝	◝	◝	**63212 ZZ**
5400	6300	●	●	◴	◝	◴	◴	◴	◴	◴	**6312 ZZ**
5400	-	◝	◝	◝	◝	◝	◝	◝	◝	◝	**63312 ZZ**
7400	8700	●	●	◴	◝	◝	◴	◴	◴	◝	**61813 ZZ**
7000	8200	●	●	◴	◝	◝	◴	◴	◴	◝	**61913 ZZ**
6500	7700	●	●	◴	◝	◴	◴	◴	◴	◴	**6013 ZZ**
5500	6500	●	●	◴	◝	◴	◴	◴	◴	◴	**6213 ZZ**
5500	-	◝	◝	◝	◝	◝	◝	◝	◝	◝	**63213 ZZ**
4900	5800	●	●	◴	◝	◴	◴	◴	◴	◴	**6313 ZZ**
4900	-	◝	◝	◝	◝	◝	◝	◝	◝	◝	**63313 ZZ**
6900	8100	●	●	◴	◝	◝	◴	◴	◴	◝	**61814 ZZ**
6500	7700	●	●	◴	◝	◝	◴	◴	◴	◝	**61914 ZZ**
6100	7100	●	●	◴	◝	◴	◴	◴	◴	◴	**6014 ZZ**
5100	6000	●	●	◴	◝	◴	◴	◴	◴	◴	**6214 ZZ**
5100	-	◝	◝	◝	◝	◝	◝	◝	◝	◝	**63214 ZZ**
4600	5400	●	●	◴	◝	◴	◴	◴	◴	◴	**6314 ZZ**
4600	-	◝	◝	◝	◝	◝	◝	◝	◝	◝	**63314 ZZ**
6400	7600	●	●	◴	◝	◝	◴	◴	◴	◝	**61815 ZZ**
6100	7200	●	●	◴	◝	◝	◴	◴	◴	◝	**61915 ZZ**
5700	6700	●	●	◴	◝	◴	◴	◴	◴	◴	**6015 ZZ**
4800	5600	●	●	◴	◝	◴	◴	◴	◴	◴	**6215 ZZ**
4800	-	◝	◝	◝	◝	◝	◝	◝	◝	◝	**63215 ZZ**
4300	5000	●	●	◴	◝	◴	◴	◴	◴	◴	**6315 ZZ**
4300	-	◝	◝	◝	◝	◝	◝	◝	◝	◝	**63315 ZZ**
6000	7100	●	●	◴	◝	◝	◴	◴	◴	◝	**61816 ZZ**
5700	6700	●	●	◴	◝	◝	◴	◴	◴	◝	**61916 ZZ**
5300	3100	●	●	◴	◝	◴	◴	◴	◴	◴	**6016 ZZ**
4500	5300	●	●	◴	◝	◴	◴	◴	◴	◴	**6216 ZZ**
4500	-	◝	◝	◝	◝	◝	◝	◝	◝	◝	**63216 ZZ**
4000	4700	●	●	◴	◝	◴	◴	◴	◴	◴	**6316 ZZ**
4000	-	◝	◝	◝	◝	◝	◝	◝	◝	◝	**63316 ZZ**
5700	6700	●	●	◴	◝	◝	◴	◴	◴	◝	**61817 ZZ**
5400	6300	●	●	◴	◝	◝	◴	◴	◴	◝	**61917 ZZ**
5000	5900	●	●	◴	◝	◴	◴	◴	◴	◴	**6017 ZZ**
4200	5000	●	●	◴	◝	◴	◴	◴	◴	◴	**6217 ZZ**
3800	4500	●	●	◴	◝	◴	◴	◴	◴	◴	**6317 ZZ**
3800	-	◝	◝	◝	◝	◝	◝	◝	◝	◝	**63317 ZZ**
5400	6300	●	●	◴	◝	◝	◴	◴	◴	◝	**61818 ZZ**
5100	6000	●	●	◴	◝	◝	◴	◴	◴	◝	**61918 ZZ**
4700	5600	●	●	◴	◝	◴	◴	◴	◴	◴	**6018 ZZ**
4000	4700	●	●	◴	◝	◴	◴	◴	◴	◴	**6218 ZZ**
3600	4200	●	●	◴	◝	◴	◴	◴	◴	◴	**6318 ZZ**
3600	-	◝	◝	◝	◝	◝	◝	◝	◝	◝	**63318 ZZ**
5000	5900	●	●	◴	◝	◝	◴	◴	◴	◝	**61819 ZZ**
4800	5700	●	●	◴	◝	◝	◴	◴	◴	◝	**61919 ZZ**

* Other products also available

https://nppnovoteh.com

1. RADIAL CONTACT DEEP-GROOVE BALL BEARINGS

1.4 Single-row deep-groove ball bearings
- dimensions from 10 mm – sealed ZZ



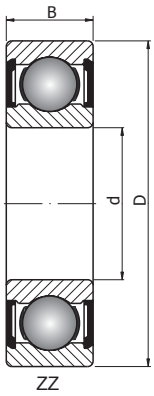

ZZ

95 – 180 mm

Shaft [mm]	Bearing No.	Series		Dimensions [mm]			Weight [kg]	Basic load ratings [kN]	
		SD	SB	d	D	B		dyn. C	stat. C_0
95 cont.	**6019 ZZ**	0	0	95	145	24	1,2	60,5	54
	6219 ZZ	2	0	95	170	32	2,6	108	81,5
	6319 ZZ	3	0	95	200	45	5,65	153	118
100	**61820 ZZ**	8	0	100	125	13	0,311	19,6	21,2
	61920 ZZ	9	0	100	140	20	0,771	42,5	42
	6020 ZZ	0	0	100	150	24	1,25	60,5	54
	6220 ZZ	2	0	100	180	34	3,15	124	93
	6320 ZZ	3	0	100	215	47	7,56	174	140
105	**61821 ZZ**	8	0	105	130	13	0,325	19,9	21,9
	61921 ZZ	9	0	105	145	20	0,793	42,5	42
	6021 ZZ	0	0	105	160	26	1,6	72,8	65,5
	6221 ZZ	2	0	105	190	36	3,7	133	104
	6321 ZZ	3	0	105	225	49	8,05	184	153
110	**61822 ZZ**	8	0	110	140	16	0,51	27,3	29,4
	61922 ZZ	9	0	110	150	20	0,83	43,5	44,5
	6022 ZZ	0	0	110	170	28	1,95	81,9	73,5
	6222 ZZ	2	0	110	200	38	4,35	143	118
	6322 ZZ	3	0	110	240	50	9,54	205	179
120	**61824 ZZ**	8	0	120	150	16	0,549	28,3	31,5
	61924 ZZ	9	0	120	165	22	1,129	53	54
	6024 ZZ	0	0	120	180	28	2,05	85,2	80
	6224 ZZ	2	0	120	215	40	5,15	155	131
	6324 ZZ	3	0	120	260	55	14,6	207	185
130	**61826 ZZ**	8	0	130	165	18	0,79	37	41
	61926 ZZ	9	0	130	180	24	1,78	65	67
	6026 ZZ	0	0	130	200	33	3,15	104	100
	6226 ZZ	2	0	130	230	40	5,82	167	146
	6326 ZZ	3	0	130	280	58	18,2	230	214
140	**61828 ZZ**	8	0	140	175	18	0,84	38	44,5
	61928 ZZ	9	0	140	190	24	1,9	66,5	71
	6028 ZZ	0	0	140	210	33	3,35	110	109
	6228 ZZ	2	0	140	250	42	7,47	166	150
	6328 ZZ	3	0	140	300	62	21,8	253	246
150	**61830 ZZ**	8	0	150	190	20	1,2	47,5	54,5
	61930 ZZ	9	0	150	210	28	2,64	84,5	90
	6030 ZZ	0	0	150	225	35	4,08	126	126
	6230 ZZ	2	0	150	270	45	9,41	176	168
160	**61832 ZZ**	8	0	160	200	20	1,3	48,5	56,5
	6032 ZZ	0	0	160	240	38	5,05	137	135
	6232 ZZ	2	0	160	290	48	14,3	185	186
170	**61834 ZZ**	8	0	170	215	22	1,85	60	70,5
	6034 ZZ	0	0	170	260	42	6,76	161	160
	6234 ZZ	2	0	170	310	52	17,5	212	224
180	**61836 ZZ**	8	0	180	225	22	2,02	60,5	73
	6036 ZZ	0	0	180	280	46	8,8	180	184
	6236 ZZ	2	0	180	320	52	18,3	228	242

- warehouse - order - phone



Limiting speed [rpm]		Basic makes*									Bearing No.
grease	oil	-	Z	M	TN	NR	C3	C4	P66	SS	
4500	5300	●	●	○	◥	○	○	○	○	○	**6019 ZZ**
3700	4400	●	●	○	◥	○	○	○	○	○	**6219 ZZ**
3300	3900	●	●	○	◥	○	○	○	○	○	**6319 ZZ**
4800	5600	●	●	○	◥	◥	○	○	○	◥	**61820 ZZ**
4500	5300	●	●	○	◥	◥	○	○	○	◥	**61920 ZZ**
4200	5000	●	●	○	◥	○	○	○	○	○	**6020 ZZ**
3500	4200	●	●	○	◥	○	○	○	○	○	**6220 ZZ**
3200	3700	●	●	○	◥	○	○	○	○	○	**6320 ZZ**
4600	5400	●	●	○	◥	◥	○	○	○	◥	**61821 ZZ**
4300	5100	●	●	○	◥	◥	○	○	○	◥	**61921 ZZ**
4000	4700	●	●	○	◥	○	○	○	○	○	**6021 ZZ**
3400	4000	●	●	○	◥	○	○	○	○	○	**6221 ZZ**
3000	2100	○	○	○	◥	○	○	○	○	◥	**6321 ZZ**
4300	5100	●	●	○	◥	◥	○	○	○	◥	**61822 ZZ**
4100	4800	●	●	○	◥	◥	○	○	○	◥	**61922 ZZ**
3800	4500	●	●	○	◥	○	○	○	○	○	**6022 ZZ**
3200	3800	●	●	○	◥	○	○	○	○	○	**6222 ZZ**
2900	3400	○	○	○	◥	○	○	○	○	◥	**6322 ZZ**
4000	4700	●	●	○	◥	◥	○	○	○	◥	**61824 ZZ**
3800	4400	●	●	○	◥	◥	○	○	○	◥	**61924 ZZ**
3500	4100	●	●	○	◥	○	○	○	○	○	**6024 ZZ**
2900	3400	●	●	○	◥	○	○	○	○	○	**6224 ZZ**
2600	3100	○	○	○	◥	○	○	○	○	◥	**6324 ZZ**
3700	4300	●	●	○	◥	◥	○	○	○	◥	**61826 ZZ**
3500	4100	●	●	○	◥	◥	○	○	○	◥	**61926 ZZ**
3200	3800	●	●	○	◥	○	○	○	○	○	**6026 ZZ**
2700	3100	●	●	○	◥	○	○	○	○	○	**6226 ZZ**
2400	2800	○	○	○	◥	○	○	○	○	◥	**6326 ZZ**
3400	4000	○	○	○	◥	◥	○	○	○	◥	**61828 ZZ**
3200	3800	○	○	○	◥	◥	○	○	○	◥	**61928 ZZ**
3000	3500	●	●	○	◥	○	○	○	○	○	**6028 ZZ**
2500	2900	●	●	○	◥	○	○	○	○	○	**6228 ZZ**
2200	2600	○	○	○	◥	○	○	○	○	◥	**6328 ZZ**
3100	3700	○	○	○	◥	◥	○	○	○	◥	**61830 ZZ**
3000	3500	○	○	○	◥	◥	○	○	○	◥	**61930 ZZ**
2800	3200	○	○	○	◥	○	○	○	○	○	**6030 ZZ**
2300	2700	○	○	○	◥	○	○	○	○	○	**6230 ZZ**
2900	3400	○	○	○	◥	◥	○	○	○	◥	**61832 ZZ**
2600	3000	○	○	○	◥	○	○	○	○	○	**6032 ZZ**
2100	2500	○	○	○	◥	○	○	○	○	○	**6232 ZZ**
2700	3200	○	○	○	◥	◥	○	○	○	◥	**61834 ZZ**
2400	2800	○	○	○	◥	○	○	○	○	○	**6034 ZZ**
2000	2400	○	○	○	◥	○	○	○	○	○	**6234 ZZ**
2600	3000	○	○	○	◥	◥	○	○	○	◥	**61836 ZZ**
2300	2700	○	○	○	◥	○	○	○	○	○	**6036 ZZ**
1900	2200	○	○	○	◥	○	○	○	○	○	**6236 ZZ**

* Other products also available

https://nppnovoteh.com

1. RADIAL CONTACT DEEP-GROOVE BALL BEARINGS

1.4 Single-row deep-groove ball bearings
- dimensions from 10 mm – sealed ZZ



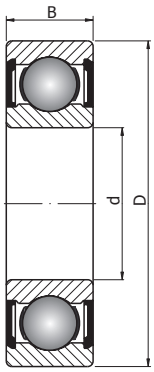

ZZ

190 – 200 mm

Shaft [mm]	Bearing No.	Series		Dimensions [mm]			Weight [kg]	Basic load ratings [kN]	
		SD	SB	d	D	B		dyn. C	stat. C_0
190	**61838 ZZ**	8	0	190	240	24	2,6	73	88
	6038 ZZ	0	0	190	290	46	9,18	188	200
200	**6040 ZZ**	0	0	200	310	51	11,9	201	222
	6240 ZZ	2	0	200	360	58	28,2	268	310

- warehouse - order - phone



Limiting speed [rpm]		Basic makes*									Bearing No.
grease	oil	-	Z	M	TN	NR	C3	C4	P66	SS	
2400	2900	◴	◴	◴	◥	◥	◴	◴	◴	◥	**61838 ZZ**
2100	2500	◴	◴	◴	◥	◴	◴	◴	◴	◴	**6038 ZZ**
2000	2400	◴	◴	◴	◥	◴	◴	◴	◴	◴	**6040 ZZ**
1700	2000	◴	◴	◴	◥	◴	◴	◴	◴	◴	**6240 ZZ**

* Other products also available

https://nppnovoteh.com

1. RADIAL CONTACT DEEP-GROOVE BALL BEARINGS

1.5 Single-row deep-groove ball bearings for magnetos



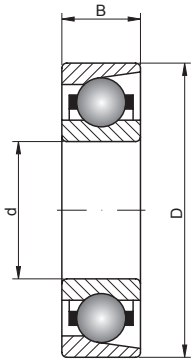

E.. Bo.. L.. M..

3 – 30 mm

Shaft [mm]	Bearing No.	Dimensions [mm]			Weight [kg]	Basic load ratings [kN]		Limiting speed [rpm]	
		d	D	B		dyn. C	stat. C_0	grease	oil
3	**E3**	3	16	5	0,005	1,2	0,24	34000	40000
4	**E4**	4	16	5	0,005	1,2	0,24	34000	40000
5	**E5**	5	16	5	0,005	1,2	0,24	34000	40000
6	**E6**	6	21	7	0,011	2,2	0,4	30000	36000
7	**E7**	7	22	7	0,013	2,36	0,46	28000	34000
8	**E8**	8	24	7	0,016	2,52	0,55	28000	34000
9	**E9**	9	28	8	0,023	3,3	0,75	26000	32000
10	**E10**	10	28	8	0,028	3,3	0,75	26000	32000
11	**E11**	11	32	7	0,029	2,68	0,75	22000	28000
12	**E12**	12	32	7	0,028	2,68	0,75	22000	28000
13	**E13**	13	30	7	0,022	2,68	0,75	22000	28000
15	**E15**	15	35	8	0,034	3,5	1	19000	24000
15	**Bo15**	15	40	10	0,058	5,6	1,5	18000	22000
17	**L17**	17	40	10	0,055	4,4	1,3	17000	20000
17	**Bo17**	17	44	11	0,075	6,7	1,86	15000	18000
17	**E17**	17	44	11	0,079	5,62	1,26	16000	19000
19	**E19**	19	40	9	0,049	3,45	1	17000	20000
20	**E20**	20	47	12	0,089	6,8	2,1	14000	17000
20	**L20**	20	47	14	0,1	6,8	2,1	14000	17000
20	**M20**	20	52	15	0,14	9,5	2,7	13000	16000
25	**L25**	25	52	15	0,12	6,8	2,24	12000	15000
30	**L30**	30	62	16	0,21	6,1	2,2	10000	13000

- warehouse - order - phone



Basic makes*	Bearing No.
	E3
	E4
	E5
	E6
	E7
	E8
	E9
	E10
	E11
	E12
	E13
	E15
	Bo15
	L17
	Bo17
	E17
	E19
	E20
	L20
	M20
	L25
	L30

* Other products also available

https://nppnovoteh.com

1. RADIAL CONTACT DEEP-GROOVE BALL BEARINGS

1.6 Double-row deep-groove ball bearings



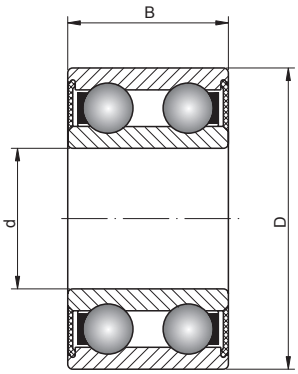

2RS

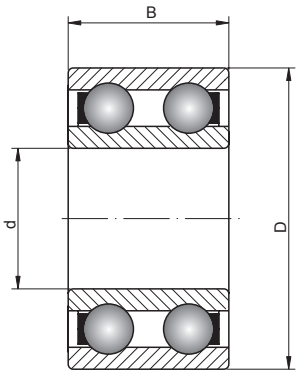

42.. 43..

10 – 60 mm

Shaft [mm]	Bearing No.	Series		Dimensions [mm]			Weight [kg]	Basic load ratings [kN]	
		SD	SB	d	D	B		dyn. C	stat. C_0
10	**4200**	2	2	10	30	14	0,049	9,15	4,5
	4200 2RS	2	2	10	30	14	0,049	9,15	4,5
12	**4201**	2	2	12	32	14	0,053	10,6	6,2
	4201 2RS	2	2	12	32	14	0,053	10,6	6,2
15	**4202**	2	2	15	35	14	0,059	11,9	7,5
	4202 2RS	2	2	15	35	14	0,059	11,9	7,5
	4302	3	2	15	42	17	0,12	14,8	9,5
	4302 2RS	3	2	15	42	17	0,12	14,8	9,5
17	**4203**	2	2	17	40	16	0,09	14,8	9,5
	4203 2RS	2	2	17	40	16	0,09	14,8	9,5
	4303	3	2	17	47	19	0,16	19,5	13,2
	4303 2RS	3	2	17	47	19	0,16	19,5	13,2
20	**4204**	2	2	20	47	18	0,14	17,8	12,5
	4204 2RS	2	2	20	47	18	0,14	17,8	12,5
	4304	3	2	20	52	21	0,21	23,4	16
	4304 2RS	3	2	20	52	21	0,21	23,4	16
25	**4205**	2	2	25	52	18	0,16	19	14,6
	4205 2RS	2	2	25	52	18	0,16	19	14,6
	4305	3	2	25	62	24	0,34	31,9	22,4
	4305 2RS	3	2	25	62	24	0,34	31,9	22,4
30	**4206**	2	2	30	62	20	0,26	26	20,8
	4206 2RS	2	2	30	62	20	0,26	26	20,8
	4306	3	2	30	72	27	0,5	41	30
	4306 2RS	3	2	30	72	27	0,5	41	30
35	**4207**	2	2	35	72	23	0,4	35,1	28,5
	4207 2RS	2	2	35	72	23	0,4	35,1	28,5
	4307	3	2	35	80	31	0,69	50,7	38
	4307 2RS	3	2	35	80	31	0,69	50,7	38
40	**4208**	2	2	40	80	23	0,5	37,1	32,5
	4208 2RS	2	2	40	80	23	0,5	37,1	32,5
	4308	3	2	40	90	33	0,95	55,9	45
	4308 2RS	3	2	40	90	33	0,95	55,9	45
45	**4209**	2	2	45	85	23	0,54	39	36
	4209 2RS	2	2	45	85	23	0,54	39	36
	4309	3	2	45	100	36	1,25	68,9	56
	4309 2RS	3	2	45	100	36	1,25	68,9	56
50	**4210**	2	2	50	90	23	0,58	41	40
	4210 2RS	2	2	50	90	23	0,58	41	40
	4310	3	2	50	110	40	1,7	81,9	69,5
	4310 2RS	3	2	50	110	40	1,7	81,9	69,5
55	**4211**	2	2	55	100	25	0,8	44,9	44
	4311	3	2	55	120	43	2,15	97,5	83
60	**4212**	2	2	60	110	28	1,1	57,2	55
	4312	3	2	60	130	46	2,65	112	98

- warehouse - order - phone



Limiting speed [rpm]		Basic makes*						Bearing No.
grease	oil	-	RS	TN	M	C3	P6	
18000	24000	●	-	◴	◥	◴	◴	**4200**
18000	-	●	●	◴	◥	◴	◴	**4200 2RS**
17000	20000	●	-	◴	◥	◴	◴	**4201**
17000	-	●	●	◴	◥	◴	◴	**4201 2RS**
14000	17000	●	-	◴	◥	◴	◴	**4202**
14000	-	●	●	◴	◥	◴	◴	**4202 2RS**
12000	15000	●	-	◴	◥	◴	◴	**4302**
12000	-	●	●	◴	◥	◴	◴	**4302 2RS**
12000	15000	●	-	◴	◥	◴	◴	**4203**
12000	-	●	●	◴	◥	◴	◴	**4203 2RS**
10000	13000	●	-	◴	◥	◴	◴	**4303**
10000	-	●	●	◴	◥	◴	◴	**4303 2RS**
10000	13000	●	-	◴	◥	◴	◴	**4204**
10000	-	●	●	◴	◥	◴	◴	**4204 2RS**
9500	12000	●	-	◴	◥	◴	◴	**4304**
9500	-	●	●	◴	◥	◴	◴	**4304 2RS**
9000	11000	●	-	◴	◥	◴	◴	**4205**
9000	-	●	●	◴	◥	◴	◴	**4205 2RS**
8500	10000	●	-	◴	◥	◴	◴	**4305**
8500	-	●	●	◴	◥	◴	◴	**4305 2RS**
8000	9500	●	-	◴	◥	◴	◴	**4206**
8000	-	●	●	◴	◥	◴	◴	**4206 2RS**
7000	8500	●	-	◴	◥	◴	◴	**4306**
7000	-	●	●	◴	◥	◴	◴	**4306 2RS**
6700	8000	●	-	◴	◥	◴	◴	**4207**
6700	-	●	●	◴	◥	◴	◴	**4207 2RS**
6300	7500	●	-	◴	◥	◴	◴	**4307**
6300	-	●	●	◴	◥	◴	◴	**4307 2RS**
6000	7000	●	-	◴	◥	◴	◴	**4208**
6000	-	●	●	◴	◥	◴	◴	**4208 2RS**
5600	6700	●	-	◴	◥	◴	◴	**4308**
5600	-	●	●	◴	◥	◴	◴	**4308 2RS**
5600	6700	●	-	◴	◥	◴	◴	**4209**
5600	-	●	●	◴	◥	◴	◴	**4209 2RS**
5000	6000	●	-	◴	◥	◴	◴	**4309**
5000	-	●	●	◴	◥	◴	◴	**4309 2RS**
5000	6000	●	-	◴	◥	◴	◴	**4210**
5000	-	●	●	◴	◥	◴	◴	**4210 2RS**
4500	5300	●	-	◴	◥	◴	◴	**4310**
4500	-	●	●	◴	◥	◴	◴	**4310 2RS**
4800	5600	●	-	◥	◥	◴	◴	**4211**
4300	5000	●	-	◥	◥	◴	◴	**4311**
4500	5300	●	-	◥	◥	◴	◴	**4212**
3800	4500	●	-	◥	◥	◴	◴	**4312**

* Other products also available

https://nppnovoteh.com

1. RADIAL CONTACT DEEP-GROOVE BALL BEARINGS

1.6 Double-row deep-groove ball bearings



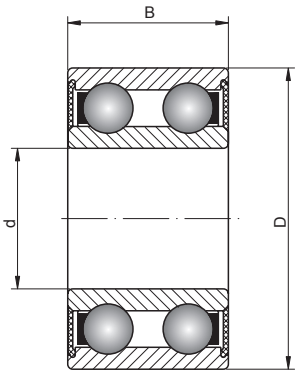

2RS

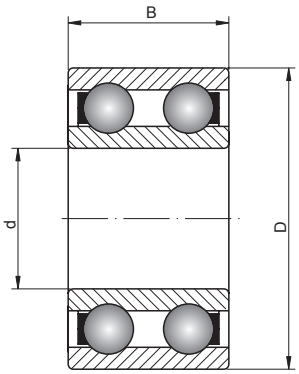

42.. 43..

65 – 100 mm

Shaft [mm]	Bearing No.	Series		Dimensions [mm]			Weight [kg]	Basic load ratings [kN]	
		SD	SB	d	D	B		dyn. C	stat. C_0
65	**4213**	2	2	65	120	31	1,45	67,6	67
	4313	3	2	65	140	48	3,25	121	106
70	**4214**	2	2	70	125	31	1,5	70,2	73,5
	4314	3	2	70	150	51	3,95	138	125
75	**4215**	2	2	75	130	31	1,6	72,8	80
	4315	3	2	75	160	55	4,8	156	143
80	**4216**	2	2	80	140	33	2	80,6	90
85	**4217**	2	2	85	150	36	2,55	93,6	102
90	**4218**	2	2	90	160	40	3,2	112	122
100	**4220**	2	2	100	180	46	4,7	140	156

- warehouse - order - phone



Limiting speed [rpm]		Basic makes*						Bearing No.
grease	oil	-	RS	TN	M	C3	P6	
4000	4800	●	-	●	●	●	●	**4213**
3600	4300	●	-	●	●	●	●	**4313**
3600	4300	●	-	●	●	●	●	**4214**
3200	3800	●	-	●	●	●	●	**4314**
3400	4000	●	-	●	●	●	●	**4215**
3000	3600	●	-	●	●	●	●	**4315**
3200	3800	●	-	●	●	●	●	**4216**
3000	3600	●	-	●	●	●	●	**4217**
2800	3400	●	-	●	●	●	●	**4218**
2400	3000	●	-	●	●	●	●	**4220**

* Other products also available

https://nppnovoteh.com

2. ANGULAR-CONTACT RADIAL BALL BEARINGS

ŁOZYSKA TOCZNE

ROLLING BEARINGS

CUSCINETTI





ŁOZYSKA TOC

https://nppnovoteh.com

TABLES:

2.	ANGULAR CONTACT RADIAL BALL BEARINGS
2.1.	Single-row angular-contact ball bearings – standard
2.2	Single-row angular-contact ball bearings – for assembly in pairs
2.3	Single-row angular-contact high-speed ball bearings
2.4	Double-row angular-contact ball bearings
2.5	Single-row angular-contact double-direction ball bearings (Q, QJ)

INTRODUCTION:

2. Angular-contact radial ball bearings

Dimension series

- **single-row single-direction**
  - 718.. 719.. 70.. 72.. 73.. 74..
- **double-row double-direction**
  - 38.. 39.. 30.. 32.. 33..
- **single-row double-direction**
  - Q19.. Q10.. Q12.. Q2.. Q3..
  - QJ19.., QJ10.., QJ12.., QJ2.., QJ3..

2.1. Angular-contact single-row radial ball bearings

2.1.1. Structure

Single-row angular-contact single-direction radial ball bearings are not separable and consist of an outer ring, an inner ring and a cage with balls. The cage is guided on the inner ring (“B” after the cage designation), or on the outer ring (“A” after the cage designation) or solely on the balls (no letter after the cage designation).
The basic feature differentiating angular contact ball bearings from regular ball bearings is a different construction of the inner guided track of the outer ring. The track is positioned axially in one direction. Owing to that fact such bearings can carry considerable axial loads exactly in this direction.



Fig.6 Single-row angular-contact radial ball bearing

We can set apart several makes of guided tracks of bearings conformably to their contact angles:

- **25°** - **A** or **AC** or **E** designation behind the bearing’s symbol
- **26°** - **AA** designation behind the bearing’s symbol
- **40°** - **B** designation behind the bearing’s symbol
- **15°** - **C** designation behind the bearing’s symbol
- **12°** - **CA** designation behind the bearing’s symbol – special high-speed versions
- **10°** - **CB** designation behind the bearing’s symbol - special high-speed versions

Dimension series are in direct relation to the angle of the inner track:

- for narrow and light series as 718.., 719.., 70..the angles A and C are most often used, e.g. 7016 ATBP4, 7000 CTBP4,
- for medium 72.. series the angles A, B, C are used, e.g. 7206 B, 7210 C, 7209 ATBP5,
- for wide and heavy series as 73.., 74.. one uses most often the angle B, e.g. 7322 BM.

2.1.2. Cages

The cages of single-row angular contact single-direction radial ball bearings in the standard accuracy class are made most frequently of thermoplastic material – polyamide strengthened with glass fiber, whose limiting operating temperature equals 120°C - or are stamped from steel sheet, and for larger bearings steel or solid brazen cages are usually used.
For high-speed bearings, which are first of all designed for bearing mounting of machine tools’ spindles, massive cages are made of thermohardening material – textolite (T marking). The cages, because of their low weight, have a low moment of inertia, what in turn enables them to reach very high rotational speed. Also the vibration level of textolite cages is the lowest in comparison with cages made of other materials, and continuous operation temperature of heat-hardening material can be above 100°C.

2.1.3. Features

Single-row angular-contact single-direction radial ball bearings are characterized by ability to carry combined loads. Besides typical radial load they also carry axial load in one direction (see contact angle).
Bearings in A and C version reach high rotational speed at small axial load. However it is indispensable for a bearing to get applied a minimum axial force to operate properly. This issue has been thoroughly discussed in Chapter VII. The B version concentrates, above all, on carrying axial loads at medium rotational speed. Angular-contact single-row single-direction radial ball bearings are particularly sensitive to errors of alignment and shaft deflection errors.

https://nppnovoteh.com

Axial loads in opposite direction to the track's diagonal are unacceptable.

2.1.4. Assembling bearings in pairs

Angular-contact single-row single-direction radial ball bearings can operate in units consisting of some individual bearings. Taking into account the necessity for carrying combined loads the bearings are positioned in relation to each other in an appropriate way:

- **X –** oblique internal bearing tracks are directed to the inside of the arrangement
- **O** - oblique internal bearing tracks are directed to the outside of the arrangement
- **TANDEM** – all bearings are positioned in such a way that their oblique tracks point out in the same direction.

Note: Rated rotational speed of bearings assembled in pairs is considerably lower than the velocity of individual bearings building the arrangement.

2.1.5. Application

Because of their features single-row angular-contact single-direction radial ball bearings find application in all branches of industry. Wherever even very small axial loads make the use of regular ball bearings impossible, angular-contact ball bearings seem optimal and relatively reasonable solution in economic terms and the combination of the special cage making with the high accuracy class enables reaching high rotational parameters and high precision of bearing mounting. The angular-contact bearings have been for years the market-leader in the field of bearing mounting of tool machines' spindles.

2.1.6. Modern solutions
High-speed angular-contact bearings for machine tools' spindles

The last few years have seen extraordinarily quick pace of engineering development that brought about many new solutions in the field of bearing mounting of machine tools' spindles. Increasing requirements regarding velocity, operating temperature, precision, reliability, and vibration level forced designers of the angular-contact bearings to develop elements meeting the above mentioned conditions. While regular angular-contact bearings have been manufactured for a long time, high-speed and hybrid bearings represent the latest technical solutions. Outside dimensions of these bearings are standardized. Redesigned internal construction and smaller balls made of special steel or ceramics allow to obtain even better parameters.

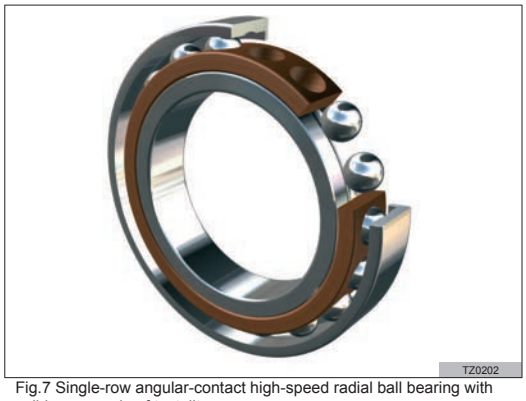

Fig.7 Single-row angular-contact high-speed radial ball bearing with solid cage made of textolite

2.2. Double-row angular-contact radial ball bearings

2.2.1. Structure

Double-row angular-contact ball bearing corresponds in its construction to a pair of angular-contact single-row ball bearings in the open arrangement ("O"). We can set apart several makings of guided tracks of these bearings conformably to their contact angles:

- **25°** - **B** designation behind the bearing's symbol
- **32°** - no designation behind the bearing's symbol
- **35°** - no designation behind the bearing's symbol
- **45°** - **D** or **DA** designation behind the bearing's symbol (detached internal ring

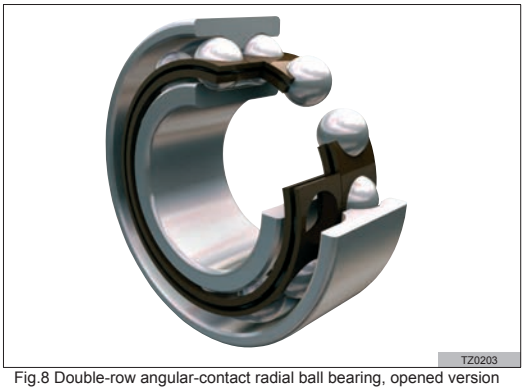

Fig.8 Double-row angular-contact radial ball bearing, opened version

2.2.2. Cages

There are types with a steel cage, brazen cage and a cage made from polyamide in sealed 2RS as well as ZZ variants.

2.2.3. Features and application

The bearing can accommodate heavy radial loads and axial loads in both directions. It is especially suitable for bearing mountings from which rigid guidance in axial direction is demanded. Double-row angular-contact double-direction ball bearings are particularly sensitive to errors of alignment. A variant of double-row angular-contact ball bearings is widely implemented in the automobile industry, especially in the hubs units of car wheels. But the construction of these bearings is very specific, most often with a split inner ring and other, untypical sizes and designations. They are ever more fully integrated with a hub.

https://nppnovoteh.com



Fig.9 Single-row angular-contact double-direction radial ball bearing with a split inner ring, Q-type



Fig.10 Single-row angular-contact double-direction radial ball bearing with split inner rings, QJ-type

2.3. Single-row angular-contact double-direction radial ball bearings

Another name for four-point contact ball bearings with a split ring.

2.3.1. Structure

They are angular-contact single-row ball bearings, the tracks of which are shaped in such a way, that axial loads can be carried in both directions. They are dismountable bearings, whereas - depending on the type - the inner or the outer ring is split. The contact angle of Q-series bearings is 23° and QJ-series bearings 35°.

2.3.2. Cages

There are construction solutions based on steel, brazen and polyamide cages

2.3.3. Features and application

These bearings can support axial loads in both directions, but they should not be used in places where strictly radial loads may occur. They obtain large load capacity in the axial direction through the large number of balls, considerable height of track lips and the contact angle of 23° or 35°.
The Q- and QJ-series bearings take definitely less space in the axial direction than corresponding angular-contact double-row bearings. It is of special importance when the bearing-closed pair size is vital to the whole construction. And detachability of these bearings makes individual ring mounting possible.
Single-row double-direction angular-contact radial ball bearing are particularly sensitive to errors of alignment.

https://nppnovoteh.com

2. ANGULAR CONTACT RADIAL BALL BEARINGS

2.1. Single-row angular-contact ball bearings – standard



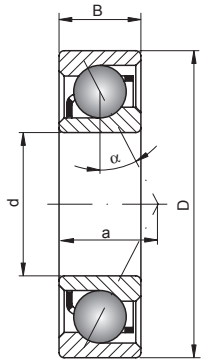

10 – 25 mm

Shaft [mm]	Bearing No.	Series		Dimensions [mm]				Weight [kg]	Basic load ratings [kN]	
		SD	SB	d	D	B	a		dyn. C	stat. C_0
10	**71900 C**	9	0	10	22	6	5,10	0,009	3	1,5
	7000 A	0	0	10	26	8	9,10	0,025	5	2,35
	7000 B	0	0	10	26	8	11,60	0,025	4,65	2,15
	7000 C	0	0	10	26	8	6,40	0,025	5,3	2,45
	7200 A	2	0	10	30	9	10,40	0,032	4,65	2,2
	7200 B	2	0	10	30	9	13,10	0,032	4,3	2
	7200 C	2	0	10	30	9	7,20	0,032	5	2,35
	7300 A	3	0	10	35	11	12,00	0,054	8,5	3,75
12	**71901 C**	9	0	12	24	6	5,40	0,01	3,2	1,7
	7001 A	0	0	12	28	8	9,90	0,027	5,4	2,75
	7001 B	0	0	12	28	8	12,60	0,027	4,95	2,5
	7001 C	0	0	12	28	8	6,70	0,027	5,8	2,95
	7201 A	2	0	12	32	10	11,40	0,039	7,45	3,65
	7201 B	2	0	12	32	10	14,20	0,039	6,95	3,4
	7201 C	2	0	12	32	10	7,90	0,039	7,9	3,85
	7301 A	3	0	12	37	12	13,10	0,065	10,2	4,6
15	**71902 C**	9	0	15	28	7	6,40	0,02	4,75	2,65
	7002 A	0	0	15	32	9	11,30	0,039	6,1	3,45
	7002 B	0	0	15	32	9	14,60	0,039	5,55	3,15
	7002 C	0	0	15	32	9	7,60	0,039	6,6	3,7
	7202 A	2	0	15	35	11	12,90	0,048	8,1	4,25
	7202 B	2	0	15	35	11	16,20	0,048	7,45	3,95
	7202 C	2	0	15	35	11	8,90	0,048	8,65	4,55
	7302 A	3	0	15	42	13	15,00	0,088	12,5	6,45
17	**71903 C**	9	0	17	30	7	6,70	0,02	4,35	2,3
	7003 A	0	0	17	35	10	12,70	0,051	6,75	4,15
	7003 B	0	0	17	35	10	16,10	0,051	6,1	3,75
	7003 C	0	0	17	35	10	8,60	0,051	7,3	4,45
	7203 A	2	0	17	40	12	14,40	0,069	10,2	5,5
	7203 B	2	0	17	40	12	18,20	0,069	9,35	5,05
	7203 C	2	0	17	40	12	9,90	0,069	10,9	5,9
	7303 A	3	0	17	47	14	16,50	0,121	14,9	7,9
	7303 B	3	0	17	47	14	20,80	0,121	13,8	7,3
	7303 C	3	0	17	47	14	11,40	0,121	15,8	8,4
20	**71904 C**	9	0	20	37	9	8,30	0,03	7,3	4,55
	7004 A	0	0	20	42	12	15,10	0,089	10,3	6,1
	7004 B	0	0	20	42	12	19,20	0,089	9,35	5,55
	7004 C	0	0	20	42	12	10,20	0,089	11,1	6,6
	7204 A	2	0	20	47	14	17,00	0,113	14,5	8,4
	7204 B	2	0	20	47	14	21,50	0,113	13,3	7,7
	7204 C	2	0	20	47	14	11,60	0,113	15,5	9
	7304 A	3	0	20	52	15	17,90	0,156	17,4	9,4
	7304 B	3	0	20	52	15	22,60	0,156	16,2	8,7
	7304 C	3	0	20	52	15	12,30	0,156	18,5	9,95
	7404 A	4	0	20	72	19	23,10	0,395	35,6	19,1
	7404 B	4	0	20	72	19	29,20	0,395	33,5	17,9
25	**71905 C**	9	0	25	42	9	9,10	0,04	7,8	5,45
	7005 A	0	0	25	47	12	16,40	0,103	11,3	7,4
	7005 B	0	0	25	47	12	21,10	0,103	10,2	6,7
	7005 C	0	0	25	47	12	10,80	0,103	12,3	8
	7205 A	2	0	25	52	15	18,80	0,139	15,3	9,5

- warehouse - order - phone

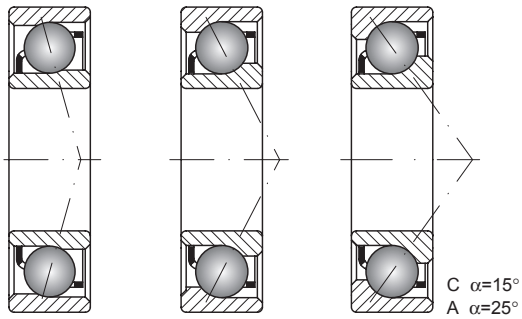

Limiting speed [rpm]		Basic makes*						Bearing No.
grease	oil	-	TN	T	M	P5	P4	
52000	69000	●	●	●	●	●	●	**71900 C**
34000	42000	■	◴	◴	●	●	●	**7000 A**
25000	33000	■	◴	◴	●	●	●	**7000 B**
47000	62000	■	◴	◴	●	●	●	**7000 C**
29000	37000	■	◴	◴	●	●	●	**7200 A**
22000	29000	■	◴	◴	●	●	●	**7200 B**
40000	54000	■	◴	◴	●	●	●	**7200 C**
27000	33000	■	◴	◴	●	●	●	**7300 A**
48000	62000	●	●	●	●	●	●	**71901 C**
29000	37000	■	◴	◴	●	●	●	**7001 A**
22000	29000	■	◴	◴	●	●	●	**7001 B**
40000	54000	■	◴	◴	●	●	●	**7001 C**
27000	34000	■	◴	◴	●	●	●	**7201 A**
20000	27000	■	◴	◴	●	●	●	**7201 B**
38000	50000	■	◴	◴	●	●	●	**7201 C**
24000	31000	■	◴	◴	●	●	●	**7301 A**
39000	52000	●	●	●	●	●	●	**71902 C**
26000	32000	■	◴	◴	●	●	●	**7002 A**
19000	25000	■	◴	◴	●	●	●	**7002 B**
35000	47000	■	◴	◴	●	●	●	**7002 C**
24000	29000	■	◴	◴	●	●	●	**7202 A**
18000	24000	■	◴	◴	●	●	●	**7202 B**
33000	43000	■	◴	◴	●	●	●	**7202 C**
20000	25000	■	◴	◴	●	●	●	**7302 A**
36000	47000	●	●	●	●	●	●	**71903 C**
23000	28000	■	◴	◴	●	●	●	**7003 A**
17000	23000	■	◴	◴	●	●	●	**7003 B**
31000	41000	■	◴	◴	●	●	●	**7003 C**
21000	26000	■	◴	◴	●	●	●	**7203 A**
16000	21000	■	◴	◴	●	●	●	**7203 B**
29000	38000	■	◴	◴	●	●	●	**7203 C**
18000	23000	■	◴	◴	●	●	●	**7303 A**
14000	18000	■	◴	◴	●	●	●	**7303 B**
25000	33000	■	◴	◴	●	●	●	**7303 C**
30000	39000	●	●	●	●	●	●	**71904 C**
19000	24000	■	◴	◴	●	●	●	**7004 A**
14000	19000	■	◴	◴	●	●	●	**7004 B**
26000	35000	■	◴	◴	●	●	●	**7004 C**
17000	22000	■	◴	◴	●	●	●	**7204 A**
13000	17000	■	◴	◴	●	●	●	**7204 B**
24000	32000	■	◴	◴	●	●	●	**7204 C**
17000	21000	■	◴	◴	●	●	●	**7304 A**
13000	17000	■	◴	◴	●	●	●	**7304 B**
23000	31000	■	◴	◴	●	●	●	**7304 C**
9600	13000	●	●	●	●	●	●	**7404 A**
8500	12000	●	●	●	●	●	●	**7404 B**
25000	33000	●	●	●	●	●	●	**71905 C**
17000	21000	■	◴	◴	●	●	●	**7005 A**
12000	17000	■	◴	◴	●	●	●	**7005 B**
23000	30000	■	◴	◴	●	●	●	**7005 C**
15000	19000	■	◴	◴	●	●	●	**7205 A**

* Other products also available

https://nppnovoteh.com

2. ANGULAR CONTACT RADIAL BALL BEARINGS

2.1. Single-row angular-contact ball bearings – standard



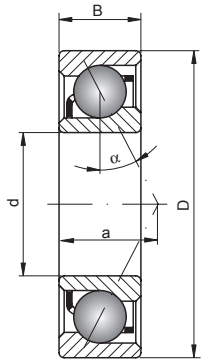

25 – 45 mm

Shaft [mm]	Bearing No.	Series		Dimensions [mm]				Weight [kg]	Basic load ratings [kN]	
		SD	SB	d	D	B	a		dyn. C	stat. C_0
25 cont.	**7205 B**	2	0	25	52	15	23,90	0,139	14	8,7
	7205 C	2	0	25	52	15	12,70	0,139	16,6	10,2
	7305 A	3	0	25	62	17	21,10	0,248	24,8	14,4
	7305 B	3	0	25	62	17	26,80	0,248	22,9	13,3
	7305 C	3	0	25	62	17	14,30	0,248	26,4	15,3
	7405 A	4	0	25	80	21	26,40	0,527	39,7	23,2
	7405 B	4	0	25	80	21	33,60	0,527	36,9	21,5
30	**71906 C**	9	0	30	47	9	9,70	0,05	8,3	6,25
	7006 A	0	0	30	55	13	18,80	0,15	14,5	10,1
	7006 B	0	0	30	55	13	24,30	0,15	13,1	9,2
	7006 C	0	0	30	55	13	12,20	0,15	15,8	11
	7206 A	2	0	30	62	16	21,50	0,217	21,3	13,7
	7206 B	2	0	30	62	16	27,60	0,217	19,4	12,5
	7206 C	2	0	30	62	16	14,30	0,217	23	14,7
	7306 A	3	0	30	72	19	24,50	0,381	30,1	18,9
	7306 B	3	0	30	72	19	31,30	0,381	27,6	17,4
	7306 C	3	0	30	72	19	16,50	0,381	32,3	20,3
	7406 A	4	0	30	90	23	29,30	0,686	47,6	28,4
	7406 B	4	0	30	90	23	37,30	0,686	44,2	26,4
35	**71907 C**	9	0	35	55	10	11,00	0,07	12,5	9,7
	7007 A	0	0	35	62	14	21,20	0,207	17,5	12,6
	7007 B	0	0	35	62	14	27,60	0,207	15,8	11,4
	7007 C	0	0	35	62	14	13,50	0,207	19,1	13,7
	7207 A	2	0	35	72	17	24,20	0,313	28,1	18,6
	7207 B	2	0	35	72	17	31,40	0,313	25,6	17
	7207 C	2	0	35	72	17	15,80	0,313	30,4	20,1
	7307 A	3	0	35	80	21	27,40	0,512	35,4	22
	7307 B	3	0	35	80	21	35,00	0,512	32,5	20,2
	7307 C	3	0	35	80	21	18,30	0,512	37,9	23,6
	7407 A	4	0	35	100	25	32,60	0,95	60,4	37
	7407 B	4	0	35	100	25	41,70	0,95	56,2	34,3
40	**71908 C**	9	0	40	62	12	12,80	0,11	15,7	12,4
	7008 A	0	0	40	68	15	23,20	0,247	18,7	14,6
	7008 B	0	0	40	68	15	30,20	0,247	16,8	13,2
	7008 C	0	0	40	68	15	14,80	0,247	20,5	15,9
	7208 A	2	0	40	80	18	26,30	0,402	33,6	23,3
	7208 B	2	0	40	80	18	34,20	0,402	30,6	21,3
	7208 C	2	0	40	80	18	17,00	0,402	36,4	25,2
	7308 A	3	0	40	90	23	30,30	0,733	43,2	27,4
	7308 B	3	0	40	90	23	38,80	0,733	39,7	25,2
	7308 C	3	0	40	90	23	20,20	0,733	46,3	29,4
	7408 A	4	0	40	110	27	35,50	1,23	69,9	43,5
	7408 B	4	0	40	110	27	45,40	1,23	64,9	40,4
45	**71909 C**	9	0	45	68	12	13,60	0,13	16,6	14,1
	7009 A	0	0	45	75	16	25,30	0,31	22,2	17,7
	7009 B	0	0	45	75	16	33,20	0,31	20	16
	7009 C	0	0	45	75	16	16,00	0,31	24,4	19,3
	7209 A	2	0	45	85	19	28,00	0,46	37,7	26,6
	7209 B	2	0	45	85	19	36,40	0,46	34,3	24,3
	7209 C	2	0	45	85	19	18,10	0,46	40,8	28,7
	7309 A	3	0	45	100	25	33,60	0,97	55,1	37,1
	7309 B	3	0	45	100	25	43,10	0,97	50,6	34,1

- warehouse - order - phone

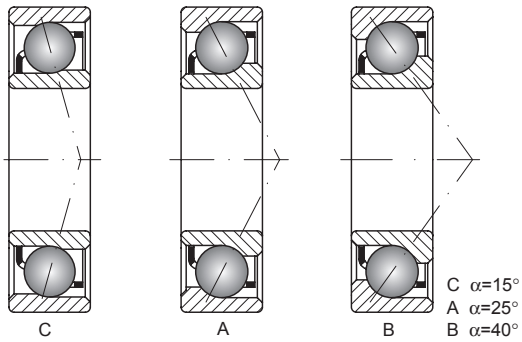

Limiting speed [rpm]		Basic makes*						Bearing No.
grease	oil	-	TN	T	M	P5	P4	
12000	15000	●	◴	◴	◝	◝	◝	**7205 B**
21000	28000	●	◴	◴	◝	◝	◝	**7205 C**
14000	17000	●	◴	◴	◝	◝	◝	**7305 A**
10000	14000	●	◴	◴	◝	◝	◝	**7305 B**
19000	25000	●	◴	◴	◝	◝	◝	**7305 C**
8200	11000	◝	◝	◝	◝	◝	◝	**7405 A**
7300	10000	◝	◝	◝	◝	◝	◝	**7405 B**
22000	29000	◝	◝	◝	◝	◝	◝	**71906 C**
14000	18000	●	◴	◴	◝	◝	◝	**7006 A**
11000	14000	●	◴	◴	◝	◝	◝	**7006 B**
20000	26000	●	◴	◴	◝	◝	◝	**7006 C**
13000	16000	●	◴	◴	◝	◝	◝	**7206 A**
9600	13000	●	◴	◴	◝	◝	◝	**7206 B**
18000	24000	●	◴	◴	◝	◝	◝	**7206 C**
12000	14000	●	◴	◴	◝	◝	◝	**7306 A**
8700	12000	●	◴	◴	◝	◝	◝	**7306 B**
16000	21000	●	◴	◴	◝	◝	◝	**7306 C**
7300	9700	◝	◝	◝	◝	◝	◝	**7406 A**
6500	8900	◝	◝	◝	◝	◝	◝	**7406 B**
19000	25000	◝	◝	◝	◝	◝	◝	**71907 C**
12000	15000	●	◴	◴	◝	◝	◝	**7007 A**
9200	12000	●	◴	◴	◝	◝	◝	**7007 B**
17000	22000	●	◴	◴	◝	◝	◝	**7007 C**
11000	14000	●	◴	◴	◝	◝	◝	**7207 A**
8300	11000	●	◴	◴	◝	◝	◝	**7207 B**
15000	20000	●	◴	◴	◝	◝	◝	**7207 C**
10000	13000	●	◴	◴	◝	◝	◝	**7307 A**
7700	10000	●	◴	◴	◝	◝	◝	**7307 B**
14000	19000	●	◴	◴	◝	◝	◝	**7307 C**
6500	8600	◝	◝	◝	◝	◝	◝	**7407 A**
5700	7900	◝	◝	◝	◝	◝	◝	**7407 B**
17000	22000	◝	◝	◝	◝	◝	◝	**71908 C**
11000	14000	●	◴	◴	◝	◝	◝	**7008 A**
8300	11000	●	◴	◴	◝	◝	◝	**7008 B**
15000	20000	●	◴	◴	◝	◝	◝	**7008 C**
10000	12000	●	◴	◴	◝	◝	◝	**7208 A**
7500	10000	●	◴	◴	◝	◝	◝	**7208 B**
14000	18000	●	◴	◴	◝	◝	◝	**7208 C**
9200	12000	●	◴	◴	◝	◝	◝	**7308 A**
6900	9200	●	◴	◴	◝	◝	◝	**7308 B**
13000	17000	●	◴	◴	◝	◝	◝	**7308 C**
5900	7900	◝	◝	◝	◝	◝	◝	**7408 A**
5200	7200	◝	◝	◝	◝	◝	◝	**7408 B**
15000	20000	◝	◝	◝	◝	◝	◝	**71909 C**
10000	12000	●	◴	◴	◝	◝	◝	**7009 A**
7500	10000	●	◴	◴	◝	◝	◝	**7009 B**
14000	18000	●	◴	◴	◝	◝	◝	**7009 C**
9400	12000	●	◴	◴	◝	◝	◝	**7209 A**
7000	9400	●	◴	◴	◝	◝	◝	**7209 B**
13000	17000	●	◴	◴	◝	◝	◝	**7209 C**
8200	10000	●	◴	◴	◝	◝	◝	**7309 A**
6200	8200	●	◴	◴	◝	◝	◝	**7309 B**

* Other products also available

https://nppnovoteh.com

2. ANGULAR CONTACT RADIAL BALL BEARINGS

2.1. Single-row angular-contact ball bearings – standard



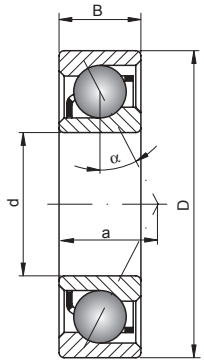

45 – 65 mm

Shaft [mm]	Bearing No.	Series		Dimensions [mm]				Weight [kg]	Basic load ratings [kN]	
		SD	SB	d	D	B	a		dyn. C	stat. C_0
45 cont.	**7309 C**	3	0	45	100	25	22,30	0,97	59,2	39,7
	7409 A	4	0	45	120	29	38,60	1,55	84,9	53,8
	7409 B	4	0	45	120	29	49,50	1,55	78,9	50
50	**71910 C**	9	0	50	72	12	14,20	0,13	17,4	15,7
	7010 A	0	0	50	80	16	26,90	0,35	23,6	20,1
	7010 B	0	0	50	80	16	35,30	0,35	21,2	18,1
	7010 C	0	0	50	80	16	16,80	0,35	26	21,9
	7210 A	2	0	50	90	20	30,40	0,51	39,4	29,4
	7210 B	2	0	50	90	20	39,60	0,51	35,7	26,7
	7210 C	2	0	50	90	20	19,40	0,51	42,8	31,8
	7310 A	3	0	50	110	27	37,20	1,23	70,1	48,1
	7310 B	3	0	50	110	27	47,90	1,23	64,4	44,3
	7310 C	3	0	50	110	27	24,50	1,23	75,1	51,6
	7410 A	4	0	50	130	31	41,60	1,92	97,4	65,3
	7410 B	4	0	50	130	31	53,50	1,92	90,2	60,4
55	**71911 C**	9	0	55	80	13	15,50	0,18	19,7	18,5
	7011 A	0	0	55	90	18	29,90	0,47	31,1	26,3
	7011 B	0	0	55	90	18	39,40	0,47	27,9	23,7
	7011 C	0	0	55	90	18	18,70	0,47	34,1	28,6
	7211 A	2	0	55	100	21	33,30	0,68	48,7	37,1
	7211 B	2	0	55	100	21	43,60	0,68	44,1	33,8
	7211 C	2	0	55	100	21	21,10	0,68	52,9	40,2
	7311 A	3	0	55	120	29	40,20	1,57	80,9	56,5
	7311 B	3	0	55	120	29	51,80	1,57	74,3	52
	7311 C	3	0	55	120	29	26,40	1,57	86,8	60,6
	7411 A	4	0	55	140	33	45,00	2,36	118	82,4
	7411 B	4	0	55	140	33	57,80	2,36	110	76,5
60	**71912 C**	9	0	60	85	13	16,30	0,19	23,2	21,8
	7012 A	0	0	60	95	18	31,40	0,99	31,9	28,1
	7012 B	0	0	60	95	18	41,50	0,99	28,6	25,3
	7012 C	0	0	60	95	18	19,40	0,99	35	30,6
	7212 A	2	0	60	110	22	36,10	1,69	58,9	45,7
	7212 B	2	0	60	110	22	47,50	1,69	53,4	41,6
	7212 C	2	0	60	110	22	22,70	1,69	64	49,5
	7312 A	3	0	60	130	31	43,20	3,84	92,5	65,6
	7312 B	3	0	60	130	31	55,80	3,84	84,9	60,3
	7312 C	3	0	60	130	31	28,40	3,84	99,2	70,3
	7412 A	4	0	60	150	35	48,50	2,85	129	93,6
	7412 B	4	0	60	150	35	62,60	2,85	119	86,7
65	**71913 C**	9	0	65	90	13	16,90	0,2	20,8	21,2
	7013 A	0	0	65	100	18	33,00	0,54	33,7	31,4
	7013 B	0	0	65	100	18	43,80	0,54	30,1	28,3
	7013 C	0	0	65	100	18	20,10	0,54	37,1	34,3
	7213 A	2	0	65	120	23	38,20	1,09	67,3	54,2
	7213 B	2	0	65	120	23	50,30	1,09	60,9	49,3
	7213 C	2	0	65	120	23	23,90	1,09	73,1	58,7
	7313 A	3	0	65	140	33	46,30	2,38	105	75,3
	7313 B	3	0	65	140	33	59,70	2,38	96,1	69,3
	7313 C	3	0	65	140	33	30,30	2,38	112	80,7
	7413 A	4	0	65	160	37	51,40	3,41	139	104
	7413 B	4	0	65	160	37	66,30	3,41	129	96,8

- warehouse - order - phone

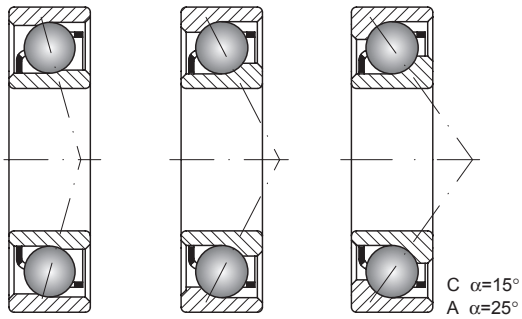

Limiting speed [rpm]		Basic makes*						Bearing No.
grease	oil	-	TN	T	M	P5	P4	
11000	15000	●	◴	◴	◝	◝	◝	**7309 C**
5400	7100	◝	◝	◝	◝	◝	◝	**7409 A**
4800	6600	◝	◝	◝	◝	◝	◝	**7409 B**
14000	18000	◝	◝	◝	◝	◝	◝	**71910 C**
9200	11000	●	◴	◴	◝	◝	◝	**7010 A**
6900	9200	●	◴	◴	◝	◝	◝	**7010 B**
13000	17000	●	◴	◴	◝	◝	◝	**7010 C**
8500	11000	●	◴	◴	◝	◝	◝	**7210 A**
6400	8500	●	◴	◴	◝	◝	◝	**7210 B**
12000	16000	●	◴	◴	◝	◝	◝	**7210 C**
7300	9100	●	◴	◴	◝	◝	◝	**7310 A**
5500	7300	●	◴	◴	◝	◝	◝	**7310 B**
10000	13000	●	◴	◴	◝	◝	◝	**7310 C**
4900	6600	◝	◝	◝	◝	◝	◝	**7410 A**
4400	6000	◝	◝	◝	◝	◝	◝	**7410 B**
13000	17000	◝	◝	◝	◝	◝	◝	**71911 C**
8300	10000	●	◴	◴	◴	◝	◝	**7011 A**
6200	8300	●	◴	◴	◴	◝	◝	**7011 B**
11000	15000	●	◴	◴	◴	◝	◝	**7011 C**
7600	9500	●	◴	◴	◴	◝	◝	**7211 A**
5700	7600	●	◴	◴	◴	◝	◝	**7211 B**
11000	14000	●	◴	◴	◴	◝	◝	**7211 C**
6700	8400	●	◴	◴	◴	◝	◝	**7311 A**
5000	6700	●	◴	◴	◴	◝	◝	**7311 B**
9300	12000	●	◴	◴	◴	◝	◝	**7311 C**
4500	6000	◝	◝	◝	◝	◝	◝	**7411 A**
4000	5500	◝	◝	◝	◝	◝	◝	**7411 B**
12000	16000	◝	◝	◝	◝	◝	◝	**71912 C**
7700	9700	●	◴	◴	◴	◝	◝	**7012 A**
5800	7700	●	◴	◴	◴	◝	◝	**7012 B**
11000	14000	●	◴	◴	◴	◝	◝	**7012 C**
6900	8600	●	◴	◴	◴	◝	◝	**7212 A**
5100	6900	●	◴	◴	◴	◝	◝	**7212 B**
9500	13000	●	◴	◴	◴	◝	◝	**7212 C**
6200	7700	●	◴	◴	◴	◝	◝	**7312 A**
4600	6200	●	◴	◴	◴	◝	◝	**7312 B**
8600	11000	●	◴	◴	◴	◝	◝	**7312 C**
4100	5500	◝	◝	◝	◝	◝	◝	**7412 A**
3700	5100	◝	◝	◝	◝	◝	◝	**7412 B**
11000	15000	◝	◝	◝	◝	◝	◝	**71913 C**
7200	9000	●	◴	◴	◴	◝	◝	**7013 A**
5400	7200	●	◴	◴	◴	◝	◝	**7013 B**
10000	13000	●	◴	◴	◴	◝	◝	**7013 C**
6400	8000	●	◴	◴	◴	◝	◝	**7213 A**
4800	6400	●	◴	◴	◴	◝	◝	**7213 B**
8900	12000	●	◴	◴	◴	◝	◝	**7213 C**
5800	7200	●	◴	◴	◴	◝	◝	**7313 A**
4300	5800	●	◴	◴	◴	◝	◝	**7313 B**
8000	11000	●	◴	◴	◴	◝	◝	**7313 C**
3900	5200	◝	◝	◝	◝	◝	◝	**7413 A**
3500	4800	◝	◝	◝	◝	◝	◝	**7413 B**

* Other products also available

https://nppnovoteh.com

2. ANGULAR CONTACT RADIAL BALL BEARINGS

2.1. Single-row angular-contact ball bearings – standard



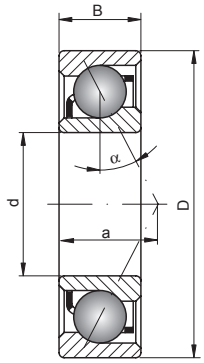

70 – 90 mm

Shaft [mm]	Bearing No.	Series		Dimensions [mm]				Weight [kg]	Basic load ratings [kN]	
		SD	SB	d	D	B	a		dyn. C	stat. C_0
70	**71914 C**	9	0	70	100	16	19,40	0,33	29	28,9
	7014 A	0	0	70	110	20	36,00	0,81	42,7	39,4
	7014 B	0	0	70	110	20	47,80	0,81	38,3	35,5
	7014 C	0	0	70	110	20	22,10	0,81	46,9	43
	7214 A	2	0	70	125	24	40,20	1,18	69,8	55,6
	7214 B	2	0	70	125	24	52,90	1,18	63,2	50,6
	7214 C	2	0	70	125	24	25,10	1,18	75,9	60,2
	7314 A	3	0	70	150	35	49,30	2,89	118	85,8
	7314 B	3	0	70	150	35	63,70	2,89	108	78,9
	7314 C	3	0	70	150	35	32,20	2,89	126	91,9
	7414 A	4	0	70	180	42	57,60	4,99	149	115
	7414 B	4	0	70	180	42	74,20	4,99	148	119
75	**71915 C**	9	0	75	105	16	20,10	0,35	29,4	30,5
	7015 A	0	0	75	115	20	37,40	0,86	43,6	41,7
	7015 B	0	0	75	115	20	49,90	0,86	39,1	37,6
	7015 C	0	0	75	115	20	22,70	0,86	48	45,6
	7215 A	2	0	75	130	25	42,10	1,32	79,2	65,2
	7215 B	2	0	75	130	25	55,50	1,32	71,7	59,3
	7215 C	2	0	75	130	25	26,20	1,32	86,1	70,6
	7315 A	3	0	75	160	37	52,40	3,47	128	97
	7315 B	3	0	75	160	37	67,80	3,47	118	89,2
	7315 C	3	0	75	160	37	34,20	3,47	137	104
	7415 A	4	0	75	190	45	61,30	5,9	171	141
	7415 B	4	0	75	190	45	78,90	5,9	158	131
80	**71916 C**	9	0	80	110	16	20,70	0,37	29,8	31,6
	7016 A	0	0	80	125	22	40,60	1,11	53,4	50,6
	7016 B	0	0	80	125	22	54,00	1,11	47,8	45,7
	7016 C	0	0	80	125	22	24,70	1,11	58,7	55,3
	7216 A	2	0	80	140	26	44,80	1,57	85,3	71,5
	7216 B	2	0	80	140	26	59,20	1,57	77,1	65
	7216 C	2	0	80	140	26	27,70	1,57	92,8	77,5
	7316 A	3	0	80	170	39	55,60	4,13	139	109
	7316 B	3	0	80	170	39	71,90	4,13	127	100
	7316 C	3	0	80	170	39	36,20	4,13	149	117
	7416 A	4	0	80	200	48	65,00	6	193	166
	7416 B	4	0	80	200	48	83,60	6	179	154
85	**71917 C**	9	0	85	120	18	22,70	0,53	38,9	40,6
	7017 A	0	0	85	130	22	42,30	1,25	54,6	53,7
	7017 B	0	0	85	130	22	56,50	1,25	48,8	48,4
	7017 C	0	0	85	130	22	25,50	1,25	60,1	58,7
	7217 A	2	0	85	150	28	47,90	2,01	98,6	83,6
	7217 B	2	0	85	150	28	63,30	2,01	89,2	76
	7217 C	2	0	85	150	28	29,70	2,01	107	90,6
	7317 A	3	0	85	180	41	58,80	4,91	150	122
	7317 B	3	0	85	180	41	76,10	4,91	137	112
	7317 C	3	0	85	180	41	38,30	4,91	161	130
	7417 A	4	0	85	210	52	68,70	8,54	204	180
	7417 B	4	0	85	210	52	88,10	8,54	189	167
90	**71918 C**	9	0	90	125	18	23,40	0,55	39,6	42,6
	7018 A	0	0	90	140	24	45,20	1,58	65,2	63,3
	7018 B	0	0	90	140	24	60,20	1,58	58,4	57,1
	7018 C	0	0	90	140	24	27,40	1,58	71,7	69,1

- warehouse - order - phone

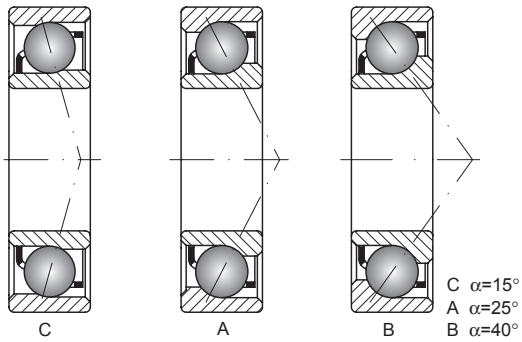

Limiting speed [rpm]		Basic makes*						Bearing No.
grease	oil	-	TN	T	M	P5	P4	
10000	12000	●	●	●	●	●	●	**71914 C**
6600	8300	■	◴	◴	◴	●	●	**7014 A**
5000	6600	■	◴	◴	◴	●	●	**7014 B**
9200	12000	■	◴	◴	◴	●	●	**7014 C**
6100	7600	■	◴	◴	◴	●	●	**7214 A**
4600	6100	■	◴	◴	◴	●	●	**7214 B**
8400	11000	■	◴	◴	◴	●	●	**7214 C**
5400	6700	■	◴	◴	◴	●	●	**7314 A**
4000	5400	■	◴	◴	◴	●	●	**7314 B**
7500	9900	■	◴	◴	◴	●	●	**7314 C**
3500	4600	●	●	●	●	●	●	**7414 A**
3100	4300	●	●	●	●	●	●	**7414 B**
9300	12000	●	●	●	●	●	●	**71915 C**
6300	7800	■	◴	◴	◴	●	●	**7015 A**
4700	6300	■	◴	◴	◴	●	●	**7015 B**
8700	11000	■	◴	◴	◴	●	●	**7015 C**
5800	7200	■	◴	◴	◴	●	●	**7215 A**
4300	5800	■	◴	◴	◴	●	●	**7215 B**
8000	11000	■	◴	◴	◴	●	●	**7215 C**
5000	6300	■	◴	◴	◴	●	●	**7315 A**
3800	5000	■	◴	◴	◴	●	●	**7315 B**
7000	9200	■	◴	◴	◴	●	●	**7315 C**
3300	4400	●	●	●	●	●	●	**7415 A**
2900	4000	●	●	●	●	●	●	**7415 B**
8800	11000	●	●	●	●	●	●	**71916 C**
5800	7200	■	◴	◴	◴	●	●	**7016 A**
4300	5800	■	◴	◴	◴	●	●	**7016 B**
8000	11000	■	◴	◴	◴	●	●	**7016 C**
5400	6700	■	◴	◴	◴	●	●	**7216 A**
4000	5400	■	◴	◴	◴	●	●	**7216 B**
7500	9900	■	◴	◴	◴	●	●	**7216 C**
4700	5900	■	◴	◴	◴	●	●	**7316 A**
3500	4700	■	◴	◴	◴	●	●	**7316 B**
6500	8600	■	◴	◴	◴	●	●	**7316 C**
3100	4100	●	●	●	●	●	●	**7416 A**
2700	3800	●	●	●	●	●	●	**7416 B**
8100	11000	●	●	●	●	●	●	**71917 C**
5500	6800	■	◴	◴	◴	●	●	**7017 A**
4100	5500	■	◴	◴	◴	●	●	**7017 B**
7600	10000	■	◴	◴	◴	●	●	**7017 C**
5000	6300	■	◴	◴	◴	●	●	**7217 A**
3800	5000	■	◴	◴	◴	●	●	**7217 B**
7000	9200	■	◴	◴	◴	●	●	**7217 C**
4400	5500	■	◴	◴	◴	●	●	**7317 A**
3300	4400	■	◴	◴	◴	●	●	**7317 B**
6100	8100	■	◴	◴	◴	●	●	**7317 C**
3000	3900	●	●	●	●	●	●	**7417 A**
2600	3600	●	●	●	●	●	●	**7417 B**
7800	10000	●	●	●	●	●	●	**71918 C**
5100	6400	■	◴	◴	◴	●	●	**7018 A**
3900	5100	■	◴	◴	◴	●	●	**7018 B**
7100	9400	■	◴	◴	◴	●	●	**7018 C**

* Other products also available

https://nppnovoteh.com

2. ANGULAR CONTACT RADIAL BALL BEARINGS

2.1. Single-row angular-contact ball bearings – standard



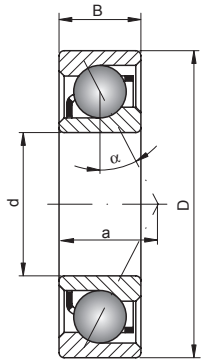

90 – 120 mm

Shaft [mm]	Bearing No.	Series		Dimensions [mm]				Weight [kg]	Basic load ratings [kN]	
		SD	SB	d	D	B	a		dyn. C	stat. C_0
90 cont.	**7218 A**	2	0	90	160	30	51,10	2,47	113	96,7
	7218 B	2	0	90	160	30	67,40	2,47	102	88
	7218 C	2	0	90	160	30	31,70	2,47	123	105
	7318 A	3	0	90	190	43	61,90	5,74	161	135
	7318 B	3	0	90	190	43	80,20	5,74	148	124
	7318 C	3	0	90	190	43	40,30	5,74	173	145
	7418 A	4	0	90	225	54	72,50	11,4	216	196
	7418 B	4	0	90	225	54	93,10	11,4	200	182
95	**71919 C**	9	0	95	130	18	24,10	0,58	40,2	44,1
	7019 A	0	0	95	145	24	47,20	1,67	66,6	67,1
	7019 B	0	0	95	145	24	63,20	1,67	59,6	60,5
	7019 C	0	0	95	145	24	28,30	1,67	73,4	73,4
	7219 A	2	0	95	170	32	54,30	3,02	122	103
	7219 B	2	0	95	170	32	71,60	3,02	111	94
	7219 C	2	0	95	170	32	33,80	3,02	133	112
	7319 A	3	0	95	200	45	65,10	6,67	172	149
	7319 B	3	0	95	200	45	84,40	6,67	158	137
	7319 C	3	0	95	200	45	42,30	6,67	185	160
100	**71920 C**	9	0	100	140	20	26,10	0,79	55,6	58,5
	7020 A	0	0	100	150	24	48,10	1,72	68,4	70,6
	7020 B	0	0	100	150	24	64,40	1,72	61,2	63,6
	7020 C	0	0	100	150	24	28,70	1,72	75,3	77,2
	7220 A	2	0	100	180	34	57,70	3,62	137	117
	7220 B	2	0	100	180	34	76,20	3,62	124	107
	7220 C	2	0	100	180	34	35,90	3,62	149	127
	7320 A	3	0	100	215	47	69,40	8,1	184	161
	7320 B	3	0	100	215	47	90,20	8,1	168	148
	7320 C	3	0	100	215	47	44,80	8,1	197	173
105	**71921 C**	9	0	105	145	20	26,70	0,8	56,7	61,5
	7021 A	0	0	105	160	26	51,80	2,16	79,8	81,9
	7021 B	0	0	105	160	26	68,60	2,16	71,4	73,8
	7021 C	0	0	105	160	26	31,00	2,16	87,8	89,6
	7221 A	2	0	105	190	36	61,00	4,29	149	132
	7221 B	2	0	105	190	36	80,50	4,29	135	121
	7221 C	2	0	105	190	36	38,00	4,29	162	143
	7321 A	3	0	105	225	49	72,10	9,28	208	193
	7321 B	3	0	105	225	49	93,70	9,28	191	177
	7321 C	3	0	105	225	49	46,60	9,28	223	207
110	**71922 C**	9	0	110	150	20	27,40	0,8	57,7	64,4
	7022 A	0	0	110	170	28	54,40	2,71	91,9	92,8
	7022 B	0	0	110	170	28	72,70	2,71	82,3	83,7
	7022 C	0	0	110	170	28	32,80	2,71	101	101
	7222 A	2	0	110	200	38	64,30	5,03	162	148
	7222 B	2	0	110	200	38	84,90	5,03	147	135
	7222 C	2	0	110	200	38	40,00	5,03	176	160
	7322 A	3	0	110	240	50	76,40	10,87	232	226
	7322 B	3	0	110	240	50	99,60	10,87	213	208
	7322 C	3	0	110	240	50	48,80	10,87	249	242
120	**71924 C**	9	0	120	165	22	30,10	1,2	71,7	81,2
	7024 A	0	0	120	180	28	57,30	2,94	96,6	103
	7024 B	0	0	120	180	28	76,90	2,94	86,4	93

- warehouse - order - phone

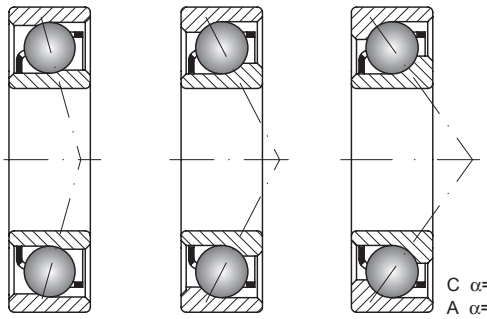

Limiting speed [rpm]		Basic makes*						Bearing No.
grease	oil	-	TN	T	M	P5	P4	
4700	5900	●	◴	◴	◴	◝	◝	**7218 A**
3500	4700	●	◴	◴	◴	◝	◝	**7218 B**
6500	8600	●	◴	◴	◴	◝	◝	**7218 C**
4200	5200	●	◴	◴	◴	◝	◝	**7318 A**
3100	4200	●	◴	◴	◴	◝	◝	**7318 B**
5800	7700	●	◴	◴	◴	◝	◝	**7318 C**
2800	3700	◝	◝	◝	◝	◝	◝	**7418 A**
2500	3400	◝	◝	◝	◝	◝	◝	**7418 B**
7400	9800	◝	◝	◝	◝	◝	◝	**71919 C**
4800	6000	●	◴	◴	◴	◝	◝	**7019 A**
3600	4800	●	◴	◴	◴	◝	◝	**7019 B**
6700	8900	●	◴	◴	◴	◝	◝	**7019 C**
4400	5500	●	◴	◴	◴	◝	◝	**7219 A**
3300	4400	●	◴	◴	◴	◝	◝	**7219 B**
6100	8100	●	◴	◴	◴	◝	◝	**7219 C**
4000	4900	●	◴	◴	◴	◝	◝	**7319 A**
3000	4000	●	◴	◴	◴	◝	◝	**7319 B**
5500	7300	●	◴	◴	◴	◝	◝	**7319 C**
7000	9200	◝	◝	◝	◝	◝	◝	**71920 C**
4700	5900	●	◴	◴	◴	◝	◝	**7020 A**
3500	4700	●	◴	◴	◴	◝	◝	**7020 B**
6500	8600	●	◴	◴	◴	◝	◝	**7020 C**
4100	5200	●	◴	◴	◴	◝	◝	**7220 A**
3100	4200	●	◴	◴	◴	◝	◝	**7220 B**
5700	7600	●	◴	◴	◴	◝	◝	**7220 C**
3600	4600	●	◴	◴	◴	◝	◝	**7320 A**
2700	3600	●	◴	◴	◴	◝	◝	**7320 B**
5000	6700	●	◴	◴	◴	◝	◝	**7320 C**
6700	8800	◝	◝	◝	◝	◝	◝	**71921 C**
4400	5500	◴	◝	◝	◝	◝	◝	**7021 A**
3300	4400	◴	◝	◝	◝	◝	◝	**7021 B**
6000	8000	◴	◝	◝	◝	◝	◝	**7021 C**
3900	4900	◝	◝	◝	◝	◝	◝	**7221 A**
2900	3900	◝	◝	◝	◝	◝	◝	**7221 B**
5400	7200	◝	◝	◝	◝	◝	◝	**7221 C**
3500	4400	◴	◝	◝	◝	◝	◝	**7321 A**
2600	3500	◴	◝	◝	◝	◝	◝	**7321 B**
4800	6400	◴	◝	◝	◝	◝	◝	**7321 C**
6400	8500	◝	◝	◝	◝	◝	◝	**71922 C**
4200	5200	◴	◝	◝	◝	◝	◝	**7022 A**
3100	4200	◴	◝	◝	◝	◝	◝	**7022 B**
5800	7700	◴	◝	◝	◝	◝	◝	**7022 C**
3700	4600	◝	◝	◝	◝	◝	◝	**7222 A**
2800	3700	◝	◝	◝	◝	◝	◝	**7222 B**
5100	6800	◝	◝	◝	◝	◝	◝	**7222 C**
3200	4000	◴	◝	◝	◝	◝	◝	**7322 A**
2400	3200	◴	◝	◝	◝	◝	◝	**7322 B**
4500	5900	◴	◝	◝	◝	◝	◝	**7322 C**
5900	7800	◝	◝	◝	◝	◝	◝	**71924 C**
3900	4900	◴	◝	◝	◝	◝	◝	**7024 A**
2900	3900	◴	◝	◝	◝	◝	◝	**7024 B**

* Other products also available

https://nppnovoteh.com

2. ANGULAR CONTACT RADIAL BALL BEARINGS

2.1. Single-row angular-contact ball bearings – standard



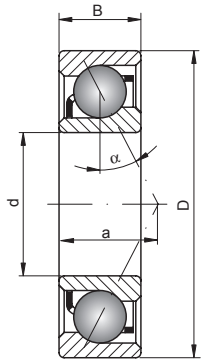

120 – 170 mm

Shaft [mm]	Bearing No.	Series		Dimensions [mm]				Weight [kg]	Basic load ratings [kN]	
		SD	SB	d	D	B	a		dyn. C	stat. C_0
120 cont.	**7024 C**	0	0	120	180	28	34,10	2,94	106	113
	7224 A	2	0	120	215	40	68,50	7,08	174	166
	7224 B	2	0	120	215	40	90,30	7,08	158	151
	7224 C	2	0	120	215	40	42,50	7,08	190	180
	7324 A	3	0	120	260	55	82,30	16,62	246	252
	7324 B	3	0	120	260	55	107,20	16,62	225	231
	7324 C	3	0	120	260	55	53,00	16,62	265	271
130	**71926 C**	9	0	130	180	24	32,80	1,5	87,2	99,9
	7026 A	0	0	130	200	33	64,10	4,43	117	125
	7026 B	0	0	130	200	33	85,70	4,43	105	113
	7026 C	0	0	130	200	33	38,60	4,43	129	137
	7226 A	2	0	130	230	40	72,00	8,1	196	198
	7226 B	2	0	130	230	40	95,50	8,1	177	180
	7226 C	2	0	130	230	40	44,10	8,1	213	214
	7326 A	3	0	130	280	58	88,80	19,9	301	329
	7326 B	3	0	130	280	58	115,00	19,9	250	268
	7326 C	3	0	130	280	58	56,50	19,9	294	314
140	**71928 C**	9	0	140	190	24	34,10	1,6	88,3	105
	7028 A	0	0	140	210	33	67,00	4,7	120	133
	7028 B	0	0	140	210	33	89,90	4,7	107	119
	7028 C	0	0	140	210	33	39,90	4,7	132	145
	7228 A	2	0	140	250	42	77,30	9,95	218	234
	7228 B	2	0	140	250	42	102,80	9,95	197	213
	7228 C	2	0	140	250	42	47,10	9,95	238	254
	7328 A	3	0	140	300	62	94,50	24,31	329	374
	7328 B	3	0	140	300	62	123,30	24,31	302	344
	7328 C	3	0	140	300	62	60,50	24,31	353	401
150	**71930 C**	9	0	150	210	28	38,10	2,5	115	132
	7030 A	0	0	150	225	35	72,10	5,49	137	154
	7030 B	0	0	150	225	35	96,20	5,49	122	138
	7030 C	0	0	150	225	35	42,80	5,49	151	169
	7230 A	2	0	150	270	45	83,10	12,46	248	280
	7230 B	2	0	150	270	45	110,60	12,46	225	254
	7230 C	2	0	150	270	45	50,60	12,46	270	303
	7330 A	3	0	150	320	65	100,30	28,36	348	414
	7330 B	3	0	150	320	65	131,10	28,36	318	380
	7330 C	3	0	150	320	65	64,00	28,36	374	445
160	**71932 C**	9	0	160	220	28	39,50	2,7	120	144
	7032 A	0	0	160	240	38	76,80	6,67	155	176
	7032 B	0	0	160	240	38	102,90	6,67	139	158
	7032 C	0	0	160	240	38	45,80	6,67	171	193
	7232 A	2	0	160	290	48	89,00	15,49	230	263
	7232 B	2	0	160	290	48	118,40	15,49	238	279
	7232 C	2	0	160	290	48	54,10	15,49	287	333
	7332 A	3	0	160	340	68	106,20	34,15	365	455
	7332 B	3	0	160	340	68	138,90	34,15	332	416
	7332 C	3	0	160	340	68	67,50	34,15	394	490
170	**7034 A**	0	0	170	260	42	83,10	8,92	186	214
	7034 B	0	0	170	260	42	111,20	8,92	166	193
	7034 C	0	0	170	260	42	49,80	8,92	204	234
	7234 A	2	0	170	310	52	95,30	19,69	27	331

- warehouse - order - phone

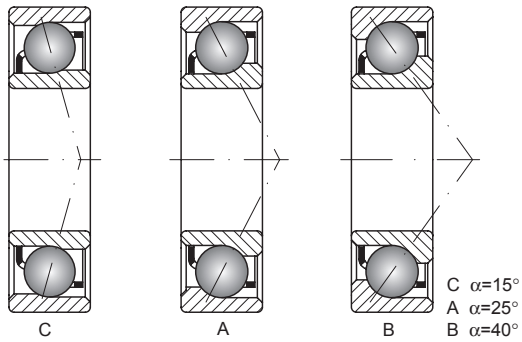

Limiting speed [rpm]		Basic makes*						Bearing No.
grease	oil	-	TN	T	M	P5	P4	
5400	7100	◴	●	●	●	●	●	**7024 C**
3400	4300	●	●	●	●	●	●	**7224 A**
2600	3400	●	●	●	●	●	●	**7224 B**
4800	6300	●	●	●	●	●	●	**7224 C**
3000	3700	◴	●	●	●	●	●	**7324 A**
2200	3000	◴	●	●	●	●	●	**7324 B**
4100	5500	◴	●	●	●	●	●	**7324 C**
5400	7100	●	●	●	●	●	●	**71926 C**
3500	4400	◴	●	●	●	●	●	**7026 A**
2600	3500	◴	●	●	●	●	●	**7026 B**
4800	6400	◴	●	●	●	●	●	**7026 C**
3200	4000	●	●	●	●	●	●	**7226 A**
2400	3200	●	●	●	●	●	●	**7226 B**
4400	5800	●	●	●	●	●	●	**7226 C**
2700	3400	◴	●	●	●	●	●	**7326 A**
2100	2700	◴	●	●	●	●	●	**7326 B**
3800	5000	◴	●	●	●	●	●	**7326 C**
5100	6700	●	●	●	●	●	●	**71928 C**
3300	4100	◴	●	●	●	●	●	**7028 A**
2500	3300	◴	●	●	●	●	●	**7028 B**
4500	6000	◴	●	●	●	●	●	**7028 C**
2900	3600	●	●	●	●	●	●	**7228 A**
2200	2900	●	●	●	●	●	●	**7228 B**
4000	5300	●	●	●	●	●	●	**7228 C**
2500	3200	◴	●	●	●	●	●	**7328 A**
1900	2500	◴	●	●	●	●	●	**7328 B**
3500	4600	◴	●	●	●	●	●	**7328 C**
4700	6200	●	●	●	●	●	●	**71930 C**
3000	3800	◴	●	●	●	●	●	**7030 A**
2300	3000	◴	●	●	●	●	●	**7030 B**
4200	5500	◴	●	●	●	●	●	**7030 C**
2700	3300	●	●	●	●	●	●	**7230 A**
2000	2700	●	●	●	●	●	●	**7230 B**
3700	4900	●	●	●	●	●	●	**7230 C**
2300	2900	●	●	●	●	●	●	**7330 A**
1800	2300	●	●	●	●	●	●	**7330 B**
3200	4300	●	●	●	●	●	●	**7330 C**
4400	5800	●	●	●	●	●	●	**71932 C**
2800	3500	●	●	●	●	●	●	**7032 A**
2100	2800	●	●	●	●	●	●	**7032 B**
3900	5200	●	●	●	●	●	●	**7032 C**
2500	3100	●	●	●	●	●	●	**7232 A**
1800	2500	●	●	●	●	●	●	**7232 B**
3400	4500	●	●	●	●	●	●	**7232 C**
2200	2700	●	●	●	●	●	●	**7332 A**
1600	2200	●	●	●	●	●	●	**7332 B**
3000	4000	●	●	●	●	●	●	**7332 C**
2600	3200	●	●	●	●	●	●	**7034 A**
1900	2600	●	●	●	●	●	●	**7034 B**
3600	4800	●	●	●	●	●	●	**7034 C**
2300	2800	●	●	●	●	●	●	**7234 A**

* Other products also available

https://nppnovoteh.com

2. ANGULAR CONTACT RADIAL BALL BEARINGS

2.1. Single-row angular-contact ball bearings – standard



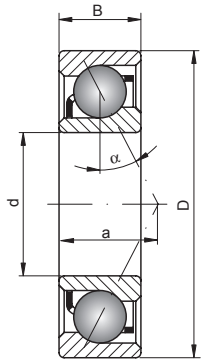

170 – 380 mm

Shaft [mm]	Bearing No.	Series		Dimensions [mm]				Weight [kg]	Basic load ratings [kN]	
		SD	SB	d	D	B	a		dyn. C	stat. C_0
170 cont.	**7234 B**	2	0	170	310	52	126,70	19,69	245	300
	7234 C	2	0	170	310	52	58,20	19,69	297	359
	7334 A	3	0	170	360	72	112,50	40,36	389	485
	7334 B	3	0	170	360	72	147,20	40,36	355	444
	7334 C	3	0	170	360	72	71,50	40,36	418	521
180	**7036 A**	0	0	180	280	46	89,40	11,28	212	253
	7036 B	0	0	180	280	46	119,50	11,28	190	228
	7036 C	0	0	180	280	46	53,80	11,28	233	276
	7236 A	2	0	180	320	52	98,20	20,26	293	362
	7236 B	2	0	180	320	52	130,90	20,26	265	329
	7236 C	2	0	180	320	52	59,50	20,26	320	393
	7336 A	3	0	180	380	75	118,30	46,72	409	534
	7336 B	3	0	180	380	75	155,00	46,72	373	488
190	**7038 A**	0	0	190	290	46	92,30	12,1	217	268
	7038 B	0	0	190	290	46	123,70	12,1	194	241
	7038 C	0	0	190	290	46	55,20	12,1	239	293
	7238 A	2	0	190	340	55	104,00	24,31	303	390
	7238 B	2	0	190	340	55	138,70	24,31	273	353
	7238 C	2	0	190	340	55	63,00	24,31	331	424
	7338 A	3	0	190	400	78	124,20	53,85	450	598
	7338 B	3	0	190	400	78	162,80	53,85	411	548
200	**7040 A**	0	0	200	310	51	99,10	15,59	244	309
	7040 B	0	0	200	310	51	132,50	15,59	218	279
	7040 C	0	0	200	310	51	59,70	15,59	268	338
	7240 A	2	0	200	360	58	109,80	28,82	324	423
	7240 B	2	0	200	360	58	146,50	28,82	292	384
	7240 C	2	0	200	360	58	66,50	28,82	354	460
	7340 A	3	0	200	420	80	129,50	60,51	474	658
	7340 B	3	0	200	420	80	170,10	60,51	432	602
220	**7044 A**	0	0	220	340	56	108,90	18,5	267	353
	7044 B	0	0	220	340	56	145,50	18,5	239	318
240	**7048 A**	0	0	240	360	56	114,60	19,7	273	375
	7048 B	0	0	240	360	56	153,90	19,7	244	338
260	**7052 A**	0	0	260	400	65	128,40	28,7	325	478
	7052 B	0	0	260	400	65	171,00	28,7	291	431
280	**7056 A**	0	0	280	420	65	133,50	30,4	332	507
	7056 B	0	0	280	420	65	179,30	30,4	297	453
300	**7060 A**	0	0	300	460	74	146,70	43,7	426	680
	7060 B	0	0	300	460	74	196,40	43,7	382	613
320	**7064 A**	0	0	320	480	74	152,50	46	437	722
	7064 B	0	0	320	480	74	204,80	46	391	651
340	**7068 A**	0	0	340	520	82	165,10	61,8	502	861
	7068 B	0	0	340	520	82	221,40	61,8	450	777
360	**7072 A**	0	0	360	540	82	170,90	64,6	515	913
	7072 B	0	0	360	540	82	229,80	64,6	461	824
380	**7076 A**	0	0	380	560	82	176,70	67,2	528	966
	7076 B	0	0	380	560	82	238,20	67,2	472	870

- warehouse - order - phone

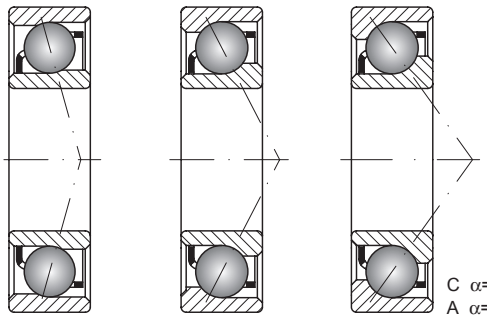

Limiting speed [rpm]		Basic makes*						Bearing No.
grease	oil	-	TN	T	M	P5	P4	
1700	2300	✓	✓	✓	✓	✓	✓	**7234 B**
3100	4200	✓	✓	✓	✓	✓	✓	**7234 C**
2000	2500	✓	✓	✓	✓	✓	✓	**7334 A**
1500	2000	✓	✓	✓	✓	✓	✓	**7334 B**
2800	3700	✓	✓	✓	✓	✓	✓	**7334 C**
2400	3000	✓	✓	✓	✓	✓	✓	**7036 A**
1800	2400	✓	✓	✓	✓	✓	✓	**7036 B**
3300	4400	✓	✓	✓	✓	✓	✓	**7036 C**
2200	2700	✓	✓	✓	✓	✓	✓	**7236 A**
1600	2200	✓	✓	✓	✓	✓	✓	**7236 B**
3000	4000	✓	✓	✓	✓	✓	✓	**7236 C**
1900	2400	✓	✓	✓	✓	✓	✓	**7336 A**
1400	1900	✓	✓	✓	✓	✓	✓	**7336 B**
2300	2800	✓	✓	✓	✓	✓	✓	**7038 A**
1700	2300	✓	✓	✓	✓	✓	✓	**7038 B**
3100	4200	✓	✓	✓	✓	✓	✓	**7038 C**
2000	2500	✓	✓	✓	✓	✓	✓	**7238 A**
1500	2000	✓	✓	✓	✓	✓	✓	**7238 B**
2800	3700	✓	✓	✓	✓	✓	✓	**7238 C**
1800	2200	✓	✓	✓	✓	✓	✓	**7338 A**
1300	1800	✓	✓	✓	✓	✓	✓	**7338 B**
2100	2600	✓	✓	✓	✓	✓	✓	**7040 A**
1600	2100	✓	✓	✓	✓	✓	✓	**7040 B**
2900	3900	✓	✓	✓	✓	✓	✓	**7040 C**
1900	2400	✓	✓	✓	✓	✓	✓	**7240 A**
1400	1900	✓	✓	✓	✓	✓	✓	**7240 B**
2600	3500	✓	✓	✓	✓	✓	✓	**7240 C**
1700	2100	✓	✓	✓	✓	✓	✓	**7340 A**
1200	1700	✓	✓	✓	✓	✓	✓	**7340 B**
1900	2400	✓	✓	✓	✓	✓	✓	**7044 A**
1400	1900	✓	✓	✓	✓	✓	✓	**7044 B**
1700	2200	✓	✓	✓	✓	✓	✓	**7048 A**
1300	1700	✓	✓	✓	✓	✓	✓	**7048 B**
1500	1900	✓	✓	✓	✓	✓	✓	**7052 A**
1100	1500	✓	✓	✓	✓	✓	✓	**7052 B**
1400	1800	✓	✓	✓	✓	✓	✓	**7056 A**
1100	1400	✓	✓	✓	✓	✓	✓	**7056 B**
1300	1600	✓	✓	✓	✓	✓	✓	**7060 A**
960	1300	✓	✓	✓	✓	✓	✓	**7060 B**
1200	1500	✓	✓	✓	✓	✓	✓	**7064 A**
890	1200	✓	✓	✓	✓	✓	✓	**7064 B**
1100	1300	✓	✓	✓	✓	✓	✓	**7068 A**
800	1100	✓	✓	✓	✓	✓	✓	**7068 B**
1000	1300	✓	✓	✓	✓	✓	✓	**7072 A**
750	1000	✓	✓	✓	✓	✓	✓	**7072 B**
940	1200	✓	✓	✓	✓	✓	✓	**7076 A**
700	940	✓	✓	✓	✓	✓	✓	**7076 B**

* Other products also available

2. ANGULAR CONTACT RADIAL BALL BEARINGS

2.2 Single-row angular-contact ball bearings
– for assembly in pairs



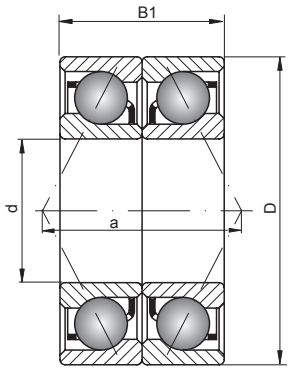

"O" system

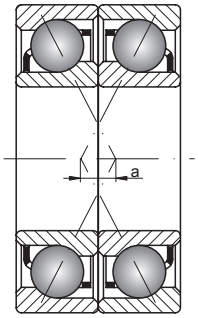

"X" system

10 – 25 mm

Shaft [mm]	Bearing arrangement			Dimensions [mm]					Weight of a system [kg]
	O system	X system	Tandem system	d	D	B1	a(o)	a(x)	
10	**71900 C-UO**	**71900 C-UX**	**71900 C-UD**	10	22	12	10,3	1,7	0,018
	7000 A-UO	**7000 A-UX**	**7000 A-UD**	10	26	16	18,2	2,2	0,05
	7000 B-UO	**7000 B-UX**	**7000 B-UD**	10	26	16	23,1	7,1	0,05
	7000 C-UO	**7000 C-UX**	**7000 C-UD**	10	26	16	12,7	3,3	0,05
	7200 A-UO	**7200 A-UX**	**7200 A-UD**	10	30	18	20,8	2,8	0,064
	7200 B-UO	**7200 B-UX**	**7200 B-UD**	10	30	18	26,2	8,2	0,064
	7200 C-UO	**7200 C-UX**	**7200 C-UD**	10	30	18	14,5	3,5	0,064
	7300 A-UO	**7300 A-UX**	**7300 A-UD**	10	35	22	24	2	0,108
12	**71901 C-UO**	**71901 C-UX**	**71901 C-UD**	12	24	12	10,8	1,2	0,02
	7001 A-UO	**7001 A-UX**	**7001 A-UD**	12	28	16	19,9	3,9	0,054
	7001 B-UO	**7001 B-UX**	**7001 B-UD**	12	28	16	25,2	9,2	0,054
	7001 C-UO	**7001 C-UX**	**7001 C-UD**	12	28	16	13,5	2,5	0,054
	7201 A-UO	**7201 A-UX**	**7201 A-UD**	12	32	20	22,7	2,7	0,078
	7201 B-UO	**7201 B-UX**	**7201 B-UD**	12	32	20	28,5	8,5	0,078
	7201 C-UO	**7201 C-UX**	**7201 C-UD**	12	32	20	15,9	4,1	0,078
	7301 A-UO	**7301 A-UX**	**7301 A-UD**	12	37	24	26,2	2,2	0,13
15	**71902 C-UO**	**71902 C-UX**	**71902 C-UD**	15	28	14	12,8	1,2	0,04
	7002 A-UO	**7002 A-UX**	**7002 A-UD**	15	32	18	22,6	4,6	0,078
	7002 B-UO	**7002 B-UX**	**7002 B-UD**	15	32	18	29,2	11,1	0,078
	7002 C-UO	**7002 C-UX**	**7002 C-UD**	15	32	18	15,3	2,7	0,078
	7202 A-UO	**7202 A-UX**	**7202 A-UD**	15	35	22	25,7	3,7	0,096
	7202 B-UO	**7202 B-UX**	**7202 B-UD**	15	35	22	32,4	10,4	0,096
	7202 C-UO	**7202 C-UX**	**7202 C-UD**	15	35	22	17,8	4,2	0,096
	7302 A-UO	**7302 A-UX**	**7302 A-UD**	15	42	26	30	4	0,176
17	**71903 C-UO**	**71903 C-UX**	**71903 C-UD**	17	30	14	13,4	0,6	0,04
	7003 A-UO	**7003 A-UX**	**7003 A-UD**	17	35	20	25,3	5,3	0,102
	7003 B-UO	**7003 B-UX**	**7003 B-UD**	17	35	20	32,2	12,2	0,102
	7003 C-UO	**7003 C-UX**	**7003 C-UD**	17	35	20	17,1	2,9	0,102
	7203 A-UO	**7203 A-UX**	**7203 A-UD**	17	40	24	28,8	4,8	0,138
	7203 B-UO	**7203 B-UX**	**7203 B-UD**	17	40	24	36,3	12,3	0,138
	7203 C-UO	**7203 C-UX**	**7203 C-UD**	17	40	24	19,8	4,2	0,138
	7303 A-UO	**7303 A-UX**	**7303 A-UD**	17	47	28	33,1	5,1	0,242
	7303 B-UO	**7303 B-UX**	**7303 B-UD**	17	47	28	41,7	13,7	0,242
	7303 C-UO	**7303 C-UX**	**7303 C-UD**	17	47	28	22,8	5,2	0,242
20	**71904 C-UO**	**71904 C-UX**	**71904 C-UD**	20	37	18	16,6	1,4	0,06
	7004 A-UO	**7004 A-UX**	**7004 A-UD**	20	42	24	30,2	6,2	0,178
	7004 B-UO	**7004 B-UX**	**7004 B-UD**	20	42	24	38,4	14,4	0,178
	7004 C-UO	**7004 C-UX**	**7004 C-UD**	20	42	24	20,4	3,6	0,178
	7204 A-UO	**7204 A-UX**	**7204 A-UD**	20	47	28	33,9	5,9	0,226
	7204 B-UO	**7204 B-UX**	**7204 B-UD**	20	47	28	42,9	14,9	0,226
	7204 C-UO	**7204 C-UX**	**7204 C-UD**	20	47	28	23,2	4,8	0,226
	7304 A-UO	**7304 A-UX**	**7304 A-UD**	20	52	30	35,8	5,8	0,312
	7304 B-UO	**7304 B-UX**	**7304 B-UD**	20	52	30	45,2	15,2	0,312
	7304 C-UO	**7304 C-UX**	**7304 C-UD**	20	52	30	24,6	5,4	0,312
	7404 A-UO	**7404 A-UX**	**7404 A-UD**	20	72	38	46,1	8,1	0,79
	7404 B-UO	**7404 B-UX**	**7404 B-UD**	20	72	38	58,4	20,4	0,79
25	**71905 C-UO**	**71905 C-UX**	**71905 C-UD**	25	42	18	18,2	0,2	0,08
	7005 A-UO	**7005 A-UX**	**7005 A-UD**	25	47	24	32,9	8,9	0,206
	7005 B-UO	**7005 B-UX**	**7005 B-UD**	25	47	24	42,3	18,3	0,206
	7005 C-UO	**7005 C-UX**	**7005 C-UD**	25	47	24	21,7	2,3	0,206
	7205 A-UO	**7205 A-UX**	**7205 A-UD**	25	52	30	37,5	7,5	0,278

- warehouse - order - phone

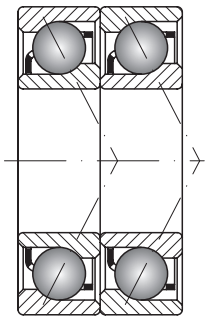

"Tandem" system



Basic load ratings [kN]		Limiting speed [rpm]		Basic makes*						Basic bearing No.
dyn. C	stat. C_0	grease	oil	-	TN	T	M	P5	P4	
4,9	3,05	42000	55000	●	●	●	●	●	●	**71900 C**
8,1	4,65	27000	34000	■	◴	◴	●	●	●	**7000 A**
7,55	4,35	20000	27000	■	◴	◴	●	●	●	**7000 B**
8,6	4,95	37000	50000	■	◴	◴	●	●	●	**7000 C**
7,55	4,4	23000	29000	■	◴	◴	●	●	●	**7200 A**
6,95	4,05	18000	23000	■	◴	◴	●	●	●	**7200 B**
8,1	4,7	32000	43000	■	◴	◴	●	●	●	**7200 C**
13,8	7,55	21000	27000	■	◴	◴	●	●	●	**7300 A**
5,15	3,45	37000	49000	●	●	●	●	●	●	**71901 C**
8,8	5,45	23000	29000	■	◴	◴	●	●	●	**7001 A**
8,1	5,05	18000	24000	■	◴	◴	●	●	●	**7001 B**
9,4	5,85	32000	43000	■	◴	◴	●	●	●	**7001 C**
12,1	7,25	22000	27000	■	◴	◴	●	●	●	**7201 A**
11,3	6,8	16000	21000	■	◴	◴	●	●	●	**7201 B**
12,8	7,7	30000	40000	■	◴	◴	●	●	●	**7201 C**
16,6	9,2	20000	24000	■	◴	◴	●	●	●	**7301 A**
7,75	5,3	31000	41000	●	●	●	●	●	●	**71902 C**
9,95	6,85	20000	26000	■	◴	◴	●	●	●	**7002 A**
9,05	6,3	15000	20000	■	◴	◴	●	●	●	**7002 B**
10,7	7,4	28000	37000	■	◴	◴	●	●	●	**7002 C**
13,2	8,55	19000	24000	■	◴	◴	●	●	●	**7202 A**
12,1	7,85	14000	19000	■	◴	◴	●	●	●	**7202 B**
14,1	9,15	26000	35000	■	◴	◴	●	●	●	**7202 C**
20,3	12,9	16000	20000	■	◴	◴	●	●	●	**7302 A**
7,05	4,6	28000	38000	●	●	●	●	●	●	**71903 C**
10,9	8,25	18000	23000	■	◴	◴	●	●	●	**7003 A**
9,9	7,5	14000	18000	■	◴	◴	●	●	●	**7003 B**
11,9	8,95	25000	33000	■	◴	◴	●	●	●	**7003 C**
16,5	11	17000	21000	■	◴	◴	●	●	●	**7203 A**
15,2	10,1	12000	17000	■	◴	◴	●	●	●	**7203 B**
17,7	11,8	23000	30000	■	◴	◴	●	●	●	**7203 C**
24,2	15,8	15000	18000	■	◴	◴	●	●	●	**7303 A**
22,5	14,6	11000	15000	■	◴	◴	●	●	●	**7303 B**
25,7	16,8	20000	27000	■	◴	◴	●	●	●	**7303 C**
11,8	9,15	24000	31000	●	●	●	●	●	●	**71904 C**
16,7	12,2	15000	19000	■	◴	◴	●	●	●	**7004 A**
15,2	11,1	11000	15000	■	◴	◴	●	●	●	**7004 B**
18	13,2	21000	28000	■	◴	◴	●	●	●	**7004 C**
23,5	16,8	14000	17000	■	◴	◴	●	●	●	**7204 A**
21,6	15,4	10000	14000	■	◴	◴	●	●	●	**7204 B**
25,2	18	19000	26000	■	◴	◴	●	●	●	**7204 C**
28,3	18,8	13000	17000	■	◴	◴	●	●	●	**7304 A**
26,3	17,4	10000	13000	■	◴	◴	●	●	●	**7304 B**
30,1	19,9	18000	24000	■	◴	◴	●	●	●	**7304 C**
57,8	38,2	7400	11000	●	●	●	●	●	●	**7404 A**
54,4	35,9	6400	9600	●	●	●	●	●	●	**7404 B**
12,7	10,9	20000	27000	●	●	●	●	●	●	**71905 C**
18,3	14,8	13000	17000	■	◴	◴	●	●	●	**7005 A**
16,6	13,4	10000	13000	■	◴	◴	●	●	●	**7005 B**
20	16	18000	24000	■	◴	◴	●	●	●	**7005 C**
24,9	19	12000	15000	■	◴	◴	●	●	●	**7205 A**

* Other products also available

https://nppnovoteh.com

2. ANGULAR CONTACT RADIAL BALL BEARINGS

2.2 Single-row angular-contact ball bearings
– for assembly in pairs



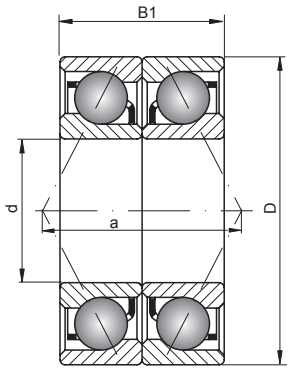

"O" system

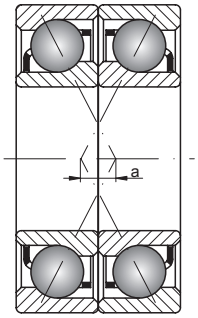

"X" system

25 – 45 mm

Shaft [mm]	Bearing arrangement			Dimensions [mm]					Weight of a system [kg]
	O system	X system	Tandem system	d	D	B1	a(o)	a(x)	
25 cont.	**7205 B-UO**	**7205 B-UX**	**7205 B-UD**	25	52	30	47,7	17,7	0,278
	7205 C-UO	**7205 C-UX**	**7205 C-UD**	25	52	30	25,5	4,5	0,278
	7305 A-UO	**7305 A-UX**	**7305 A-UD**	25	62	34	42,1	8,1	0,496
	7305 B-UO	**7305 B-UX**	**7305 B-UD**	25	62	34	53,5	19,5	0,496
	7305 C-UO	**7305 C-UX**	**7305 C-UD**	25	62	34	28,7	5,3	0,496
	7405 A-UO	**7405 A-UX**	**7405 A-UD**	25	80	42	52,8	10,8	1,054
	7405 B-UO	**7405 B-UX**	**7405 B-UD**	25	80	42	67,2	25,2	1,054
30	**71906 C-UO**	**71906 C-UX**	**71906 C-UD**	30	47	18	19,3	1,3	0,1
	7006 A-UO	**7006 A-UX**	**7006 A-UD**	30	55	26	37,5	11,5	0,3
	7006 B-UO	**7006 B-UX**	**7006 B-UD**	30	55	26	48,7	22,7	0,3
	7006 C-UO	**7006 C-UX**	**7006 C-UD**	30	55	26	24,4	1,6	0,3
	7206 A-UO	**7206 A-UX**	**7206 A-UD**	30	62	32	43	11	0,434
	7206 B-UO	**7206 B-UX**	**7206 B-UD**	30	62	32	55,2	23,2	0,434
	7206 C-UO	**7206 C-UX**	**7206 C-UD**	30	62	32	28,5	3,5	0,434
	7306 A-UO	**7306 A-UX**	**7306 A-UD**	30	72	38	49	11	0,762
	7306 B-UO	**7306 B-UX**	**7306 B-UD**	30	72	38	62,6	24,6	0,762
	7306 C-UO	**7306 C-UX**	**7306 C-UD**	30	72	38	32,9	5,1	0,762
	7406 A-UO	**7406 A-UX**	**7406 A-UD**	30	90	46	58,5	12,5	1,372
	7406 B-UO	**7406 B-UX**	**7406 B-UD**	30	90	46	74,6	28,6	1,372
35	**71907 C-UO**	**71907 C-UX**	**71907 C-UD**	35	55	20	22,1	2,1	0,14
	7007 A-UO	**7007 A-UX**	**7007 A-UD**	35	62	28	42,3	14,3	0,414
	7007 B-UO	**7007 B-UX**	**7007 B-UD**	35	62	28	55,1	27,1	0,414
	7007 C-UO	**7007 C-UX**	**7007 C-UD**	35	62	28	27	1	0,414
	7207 A-UO	**7207 A-UX**	**7207 A-UD**	35	72	34	48,5	14,5	0,626
	7207 B-UO	**7207 B-UX**	**7207 B-UD**	35	72	34	62,7	28,7	0,626
	7207 C-UO	**7207 C-UX**	**7207 C-UD**	35	72	34	31,6	2,4	0,626
	7307 A-UO	**7307 A-UX**	**7307 A-UD**	35	80	42	54,8	12,8	1,024
	7307 B-UO	**7307 B-UX**	**7307 B-UD**	35	80	42	70,1	28,1	1,024
	7307 C-UO	**7307 C-UX**	**7307 C-UD**	35	80	42	36,7	5,3	1,024
	7407 A-UO	**7407 A-UX**	**7407 A-UD**	35	100	50	65,2	15,2	1,9
	7407 B-UO	**7407 B-UX**	**7407 B-UD**	35	100	50	83,3	33,3	1,9
40	**71908 C-UO**	**71908 C-UX**	**71908 C-UD**	40	62	24	25,7	1,7	0,22
	7008 A-UO	**7008 A-UX**	**7008 A-UD**	40	68	30	46,3	16,3	0,494
	7008 B-UO	**7008 B-UX**	**7008 B-UD**	40	68	30	60,5	30,5	0,494
	7008 C-UO	**7008 C-UX**	**7008 C-UD**	40	68	30	29,5	0,5	0,494
	7208 A-UO	**7208 A-UX**	**7208 A-UD**	40	80	36	52,7	16,7	0,804
	7208 B-UO	**7208 B-UX**	**7208 B-UD**	40	80	36	68,3	32,3	0,804
	7208 C-UO	**7208 C-UX**	**7208 C-UD**	40	80	36	34,1	1,9	0,804
	7308 A-UO	**7308 A-UX**	**7308 A-UD**	40	90	46	60,5	14,5	1,466
	7308 B-UO	**7308 B-UX**	**7308 B-UD**	40	90	46	77,5	31,5	1,466
	7308 C-UO	**7308 C-UX**	**7308 C-UD**	40	90	46	40,4	5,6	1,466
	7408 A-UO	**7408 A-UX**	**7408 A-UD**	40	110	54	70,9	16,9	1,46
	7408 B-UO	**7408 B-UX**	**7408 B-UD**	40	110	54	90,8	36,8	1,46
45	**71909 C-UO**	**71909 C-UX**	**71909 C-UD**	45	68	24	27,1	3,1	0,26
	7009 A-UO	**7009 A-UX**	**7009 A-UD**	45	75	32	50,7	18,7	0,62
	7009 B-UO	**7009 B-UX**	**7009 B-UD**	45	75	32	66,3	34,3	0,62
	7009 C-UO	**7009 C-UX**	**7009 C-UD**	45	75	32	32,1	0,1	0,62
	7209 A-UO	**7209 A-UX**	**7209 A-UD**	45	85	38	56	18	0,92
	7209 B-UO	**7209 B-UX**	**7209 B-UD**	45	85	38	72,8	34,8	0,92
	7209 C-UO	**7209 C-UX**	**7209 C-UD**	45	85	38	36,2	1,8	0,92
	7309 A-UO	**7309 A-UX**	**7309 A-UD**	45	100	50	67,2	17,2	1,94
	7309 B-UO	**7309 B-UX**	**7309 B-UD**	45	100	50	86,3	36,3	1,94

- warehouse - order - phone

https://nppnovoteh.com

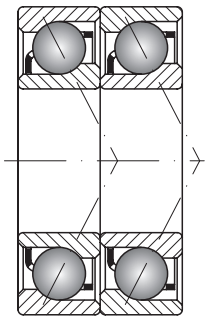

"Tandem" system

Basic load ratings [kN]		Limiting speed [rpm]		Basic makes*						Basic bearing No.
dyn. C	stat. C_0	grease	oil	-	TN	T	M	P5	P4	
22,7	17,4	9200	12000	●	◴	◴	◝	◝	◝	**7205 B**
26,9	20,5	17000	23000	●	◴	◴	◝	◝	◝	**7205 C**
40,3	28,8	11000	14000	●	◴	◴	◝	◝	◝	**7305 A**
37,2	26,6	8300	11000	●	◴	◴	◝	◝	◝	**7305 B**
42,8	30,6	15000	20000	●	◴	◴	◝	◝	◝	**7305 C**
64,5	46,3	6400	9100	◝	◝	◝	◝	◝	◝	**7405 A**
60	43	5500	8200	◝	◝	◝	◝	◝	◝	**7405 B**
13,5	12,5	18000	23000	◝	◝	◝	◝	◝	◝	**71906 C**
23,6	20,2	11000	14000	●	◴	◴	◝	◝	◝	**7006 A**
21,3	18,4	8500	11000	●	◴	◴	◝	◝	◝	**7006 B**
25,7	22	16000	21000	●	◴	◴	◝	◝	◝	**7006 C**
34,7	27,4	10000	13000	●	◴	◴	◝	◝	◝	**7206 A**
31,6	25	7700	10000	●	◴	◴	◝	◝	◝	**7206 B**
37,4	29,5	14000	19000	●	◴	◴	◝	◝	◝	**7206 C**
48,9	37,8	9200	12000	●	◴	◴	◝	◝	◝	**7306 A**
44,9	34,7	6900	9200	●	◴	◴	◝	◝	◝	**7306 B**
52,5	40,5	13000	17000	●	◴	◴	◝	◝	◝	**7306 C**
77,3	56,9	5700	8100	◝	◝	◝	◝	◝	◝	**7406 A**
71,8	52,8	4900	7300	◝	◝	◝	◝	◝	◝	**7406 B**
20,4	19,4	15000	20000	◝	◝	◝	◝	◝	◝	**71907 C**
28,4	25,2	9800	12000	●	◴	◴	◝	◝	◝	**7007 A**
25,7	22,8	7400	9900	●	◴	◴	◝	◝	◝	**7007 B**
31	27,4	13000	18000	●	◴	◴	◝	◝	◝	**7007 C**
45,7	37,3	8800	11000	●	◴	◴	◝	◝	◝	**7207 A**
41,6	34,1	6600	8800	●	◴	◴	◝	◝	◝	**7207 B**
49,4	40,2	12000	16000	●	◴	◴	◝	◝	◝	**7207 C**
57,5	44	8200	10000	●	◴	◴	◝	◝	◝	**7307 A**
52,7	40,5	6200	8200	●	◴	◴	◝	◝	◝	**7307 B**
61,6	47,2	11000	15000	●	◴	◴	◝	◝	◝	**7307 C**
98,2	73,9	5000	7200	◝	◝	◝	◝	◝	◝	**7407 A**
91,3	68,6	4300	6500	◝	◝	◝	◝	◝	◝	**7407 B**
25,6	24,9	13000	18000	◝	◝	◝	◝	◝	◝	**71908 C**
30,4	29,2	8900	11000	●	◴	◴	◝	◝	◝	**7008 A**
27,4	26,4	6600	8900	●	◴	◴	◝	◝	◝	**7008 B**
33,4	31,8	12000	16000	●	◴	◴	◝	◝	◝	**7008 C**
54,6	46,7	8000	10000	●	◴	◴	◝	◝	◝	**7208 A**
49,7	42,7	6000	8000	●	◴	◴	◝	◝	◝	**7208 B**
59,1	50,4	11000	15000	●	◴	◴	◝	◝	◝	**7208 C**
70,2	54,9	7400	9200	●	◴	◴	◝	◝	◝	**7308 A**
64,5	50,5	5500	7400	●	◴	◴	◝	◝	◝	**7308 B**
75,3	58,8	10000	14000	●	◴	◴	◝	◝	◝	**7308 C**
114	87,1	4600	6600	◝	◝	◝	◝	◝	◝	**7408 A**
105	80,8	3900	5900	◝	◝	◝	◝	◝	◝	**7408 B**
27	28,2	12000	16000	◝	◝	◝	◝	◝	◝	**71909 C**
36,2	35,4	8000	10000	●	◴	◴	◝	◝	◝	**7009 A**
32,5	32	6000	8000	●	◴	◴	◝	◝	◝	**7009 B**
39,6	38,5	11000	15000	●	◴	◴	◝	◝	◝	**7009 C**
61,3	53,2	7500	9400	●	◴	◴	◝	◝	◝	**7209 A**
55,8	48,6	5600	7500	●	◴	◴	◝	◝	◝	**7209 B**
66,3	57,4	10000	14000	●	◴	◴	◝	◝	◝	**7209 C**
89,6	74,2	6600	8200	●	◴	◴	◝	◝	◝	**7309 A**
82,1	68,2	4900	6600	●	◴	◴	◝	◝	◝	**7309 B**

* Other products also available

https://nppnovoteh.com

2. ANGULAR CONTACT RADIAL BALL BEARINGS

2.2 Single-row angular-contact ball bearings
– for assembly in pairs



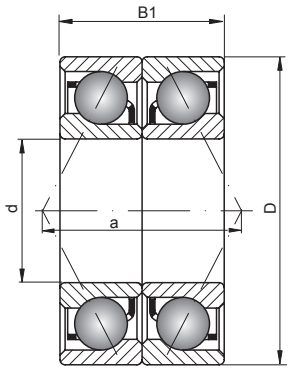

"O" system

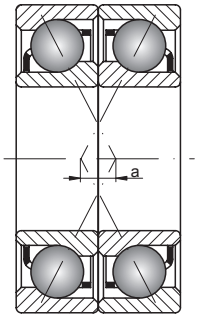

"X" system

45 – 65 mm

Shaft [mm]	Bearing arrangement			Dimensions [mm]					Weight of a system [kg]
	O system	X system	Tandem system	d	D	B1	a(o)	a(x)	
45 cont.	**7309 C-UO**	**7309 C-UX**	**7309 C-UD**	45	100	50	44,6	5,4	1,94
	7409 A-UO	**7409 A-UX**	**7409 A-UD**	45	120	58	77,2	19,2	3,1
	7409 B-UO	**7409 B-UX**	**7409 B-UD**	45	120	58	99,1	41,1	3,1
50	**71910 C-UO**	**71910 C-UX**	**71910 C-UD**	50	72	24	28,3	4,3	0,26
	7010 A-UO	**7010 A-UX**	**7010 A-UD**	50	80	32	53,8	21,8	0,7
	7010 B-UO	**7010 B-UX**	**7010 B-UD**	50	80	32	70,5	38,5	0,7
	7010 C-UO	**7010 C-UX**	**7010 C-UD**	50	80	32	33,6	1,6	0,7
	7210 A-UO	**7210 A-UX**	**7210 A-UD**	50	90	40	60,7	20,7	1,02
	7210 B-UO	**7210 B-UX**	**7210 B-UD**	50	90	40	79,2	39,2	1,02
	7210 C-UO	**7210 C-UX**	**7210 C-UD**	50	90	40	38,9	1,1	1,02
	7310 A-UO	**7310 A-UX**	**7310 A-UD**	50	110	54	74,4	20,4	2,46
	7310 B-UO	**7310 B-UX**	**7310 B-UD**	50	110	54	95,8	41,8	2,46
	7310 C-UO	**7310 C-UX**	**7310 C-UD**	50	110	54	49	5	2,46
	7410 A-UO	**7410 A-UX**	**7410 A-UD**	50	130	62	83,3	21,3	3,84
	7410 B-UO	**7410 B-UX**	**7410 B-UD**	50	130	62	106,9	44,9	3,84
55	**71911 C-UO**	**71911 C-UX**	**71911 C-UD**	55	80	26	31,1	5,1	0,36
	7011 A-UO	**7011 A-UX**	**7011 A-UD**	55	90	36	59,9	23,9	0,94
	7011 B-UO	**7011 B-UX**	**7011 B-UD**	55	90	36	78,8	42,8	0,94
	7011 C-UO	**7011 C-UX**	**7011 C-UD**	55	90	36	37,4	1,4	0,94
	7211 A-UO	**7211 A-UX**	**7211 A-UD**	55	100	42	66,6	24,6	1,36
	7211 B-UO	**7211 B-UX**	**7211 B-UD**	55	100	42	87,3	45,3	1,36
	7211 C-UO	**7211 C-UX**	**7211 C-UD**	55	100	42	42,2	0,2	1,36
	7311 A-UO	**7311 A-UX**	**7311 A-UD**	55	120	58	80,4	22,4	3,14
	7311 B-UO	**7311 B-UX**	**7311 B-UD**	55	120	58	103,7	45,7	3,14
	7311 C-UO	**7311 C-UX**	**7311 C-UD**	55	120	58	52,9	5,1	3,14
	7411 A-UO	**7411 A-UX**	**7411 A-UD**	55	140	66	89,9	23,9	4,72
	7411 B-UO	**7411 B-UX**	**7411 B-UD**	55	140	66	115,7	49,7	4,72
60	**71912 C-UO**	**71912 C-UX**	**71912 C-UD**	60	85	26	32,6	6,6	0,38
	7012 A-UO	**7012 A-UX**	**7012 A-UD**	60	95	36	62,8	26,8	1,02
	7012 B-UO	**7012 B-UX**	**7012 B-UD**	60	95	36	83	47	1,02
	7012 C-UO	**7012 C-UX**	**7012 C-UD**	60	95	36	38,8	2,8	1,02
	7212 A-UO	**7212 A-UX**	**7212 A-UD**	60	110	44	72,3	28,3	1,74
	7212 B-UO	**7212 B-UX**	**7212 B-UD**	60	110	44	95	51	1,74
	7212 C-UO	**7212 C-UX**	**7212 C-UD**	60	110	44	45,3	1,3	1,74
	7312 A-UO	**7312 A-UX**	**7312 A-UD**	60	130	62	86,5	24,5	3,94
	7312 B-UO	**7312 B-UX**	**7312 B-UD**	60	130	62	111,6	49,6	3,94
	7312 C-UO	**7312 C-UX**	**7312 C-UD**	60	130	62	56,7	5,3	3,94
	7412 A-UO	**7412 A-UX**	**7412 A-UD**	60	150	70	97	27	5,7
	7412 B-UO	**7412 B-UX**	**7412 B-UD**	60	150	70	125,1	55,1	5,7
65	**71913 C-UO**	**71913 C-UX**	**71913 C-UD**	65	90	26	33,8	7,8	0,4
	7013 A-UO	**7013 A-UX**	**7013 A-UD**	65	100	36	65,9	29,9	1,08
	7013 B-UO	**7013 B-UX**	**7013 B-UD**	65	100	36	87,6	51,6	1,08
	7013 C-UO	**7013 C-UX**	**7013 C-UD**	65	100	36	40,2	4,2	1,08
	7213 A-UO	**7213 A-UX**	**7213 A-UD**	65	120	46	76,4	30,4	2,18
	7213 B-UO	**7213 B-UX**	**7213 B-UD**	65	120	46	100,6	54,6	2,18
	7213 C-UO	**7213 C-UX**	**7213 C-UD**	65	120	46	47,8	1,8	2,18
	7313 A-UO	**7313 A-UX**	**7313 A-UD**	65	140	66	92,5	26,5	4,76
	7313 B-UO	**7313 B-UX**	**7313 B-UD**	65	140	66	119,4	53,4	4,76
	7313 C-UO	**7313 C-UX**	**7313 C-UD**	65	140	66	60,6	5,4	4,76
	7413 A-UO	**7413 A-UX**	**7413 A-UD**	65	160	74	102,9	28,9	6,82
	7413 B-UO	**7413 B-UX**	**7413 B-UD**	65	160	74	132,7	58,7	6,82

- warehouse - order - phone

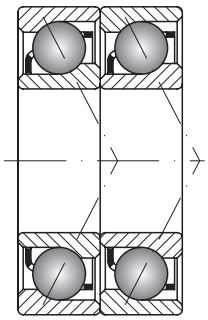

"Tandem" system

Basic load ratings [kN]		Limiting speed [rpm]		Basic makes*						Basic bearing No.
dyn. C	stat. C_0	grease	oil	-	TN	T	M	P5	P4	
96,1	79,5	9000	12000	●	◴	◴	◝	◝	◝	**7309 C**
138	108	4200	6000	◝	◝	◝	◝	◝	◝	**7409 A**
128	100	3600	5400	◝	◝	◝	◝	◝	◝	**7409 B**
28,3	31,4	11000	15000	◝	◝	◝	◝	◝	◝	**71910 C**
38,4	40,2	7300	9200	●	◴	◴	◝	◝	◝	**7010 A**
34,5	36,2	5500	7400	●	◴	◴	◝	◝	◝	**7010 B**
42,2	43,9	10000	13000	●	◴	◴	◝	◝	◝	**7010 C**
64	58,7	6800	8500	●	◴	◴	◝	◝	◝	**7210 A**
58	53,5	5100	6800	●	◴	◴	◝	◝	◝	**7210 B**
69,6	63,6	9400	12000	●	◴	◴	◝	◝	◝	**7210 C**
114	96,3	5800	7300	●	◴	◴	◝	◝	◝	**7310 A**
105	88,6	4400	5800	●	◴	◴	◝	◝	◝	**7310 B**
122	103	8000	11000	●	◴	◴	◝	◝	◝	**7310 C**
158	131	3800	5500	◝	◝	◝	◝	◝	◝	**7410 A**
147	121	3300	4900	◝	◝	◝	◝	◝	◝	**7410 B**
32	37	10000	14000	◝	◝	◝	◝	◝	◝	**71911 C**
50,5	52,5	6600	8300	●	◴	◴	◴	◝	◝	**7011 A**
45,4	47,5	5000	6600	●	◴	◴	◴	◝	◝	**7011 B**
55,4	57,3	9100	12000	●	◴	◴	◴	◝	◝	**7011 C**
79,1	74,2	6100	7600	●	◴	◴	◴	◝	◝	**7211 A**
71,6	67,6	4600	6100	●	◴	◴	◴	◝	◝	**7211 B**
85,9	80,4	8400	11000	●	◴	◴	◴	◝	◝	**7211 C**
132	113	5400	6700	●	◴	◴	◴	◝	◝	**7311 A**
121	104	4000	5400	●	◴	◴	◴	◝	◝	**7311 B**
141	121	7400	9800	●	◴	◴	◴	◝	◝	**7311 C**
192	165	3500	5000	◝	◝	◝	◝	◝	◝	**7411 A**
179	153	3000	4500	◝	◝	◝	◝	◝	◝	**7411 B**
37,8	43,6	9100	13000	◝	◝	◝	◝	◝	◝	**71912 C**
51,8	56,1	6200	7700	●	◴	◴	◴	◝	◝	**7012 A**
46,4	50,7	4600	6200	●	◴	◴	◴	◝	◝	**7012 B**
56,9	61,3	8500	11000	●	◴	◴	◴	◝	◝	**7012 C**
95,7	91,5	5500	6900	●	◴	◴	◴	◝	◝	**7212 A**
86,8	83,3	4100	5500	●	◴	◴	◴	◝	◝	**7212 B**
104	99	7500	10000	●	◴	◴	◴	◝	◝	**7212 C**
150	131	5000	6200	●	◴	◴	◴	◝	◝	**7312 A**
138	121	3700	5000	●	◴	◴	◴	◝	◝	**7312 B**
161	141	6800	9100	●	◴	◴	◴	◝	◝	**7312 C**
209	187	3200	4600	◝	◝	◝	◝	◝	◝	**7412 A**
194	173	2800	4100	◝	◝	◝	◝	◝	◝	**7412 B**
33,7	42,3	8600	12000	◝	◝	◝	◝	◝	◝	**71913 C**
54,7	62,8	5800	7200	●	◴	◴	◴	◝	◝	**7013 A**
48,9	56,6	4300	5800	●	◴	◴	◴	◝	◝	**7013 B**
60,2	68,7	7900	11000	●	◴	◴	◴	◝	◝	**7013 C**
109	108	5200	6400	●	◴	◴	◴	◝	◝	**7213 A**
99	98,7	3900	5200	●	◴	◴	◴	◝	◝	**7213 B**
119	117	7100	9400	●	◴	◴	◴	◝	◝	**7213 C**
109	108	5200	6400	●	◴	◴	◴	◝	◝	**7313 A**
99	98,7	3900	5200	●	◴	◴	◴	◝	◝	**7313 B**
119	117	7100	9400	●	◴	◴	◴	◝	◝	**7313 C**
226	209	3000	4300	◝	◝	◝	◝	◝	◝	**7413 A**
209	194	2600	3900	◝	◝	◝	◝	◝	◝	**7413 B**

* Other products also available

https://nppnovoteh.com

2. ANGULAR CONTACT RADIAL BALL BEARINGS

2.2 Single-row angular-contact ball bearings
– for assembly in pairs



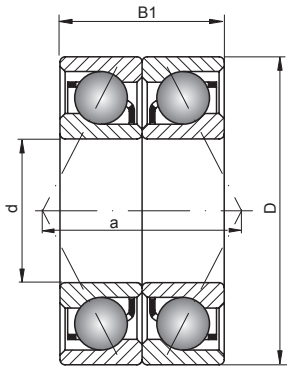

"O" system

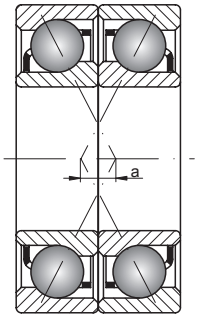

"X" system

70 – 90 mm

Shaft [mm]	Bearing arrangement			Dimensions [mm]					Weight of a system [kg]
	O system	X system	Tandem system	d	D	B1	a(o)	a(x)	
70	**71914 C-UO**	**71914 C-UX**	**71914 C-UD**	70	100	32	38,8	6,8	0,66
	7014 A-UO	**7014 A-UX**	**7014 A-UD**	70	110	40	72	32	1,62
	7014 B-UO	**7014 B-UX**	**7014 B-UD**	70	110	40	95,5	55,5	1,62
	7014 C-UO	**7014 C-UX**	**7014 C-UD**	70	110	40	44,1	4,1	1,62
	7214 A-UO	**7214 A-UX**	**7214 A-UD**	70	125	48	80,3	32,3	2,36
	7214 B-UO	**7214 B-UX**	**7214 B-UD**	70	125	48	105,8	57,8	2,36
	7214 C-UO	**7214 C-UX**	**7214 C-UD**	70	125	48	50,1	2,1	2,36
	7314 A-UO	**7314 A-UX**	**7314 A-UD**	70	150	70	98,5	28,5	5,78
	7314 B-UO	**7314 B-UX**	**7314 B-UD**	70	150	70	127,3	57,3	5,78
	7314 C-UO	**7314 C-UX**	**7314 C-UD**	70	150	70	64,5	5,5	5,78
	7414 A-UO	**7414 A-UX**	**7414 A-UD**	70	180	84	115,3	31,3	9,98
	7414 B-UO	**7414 B-UX**	**7414 B-UD**	70	180	84	148,4	66,4	9,98
75	**71915 C-UO**	**71915 C-UX**	**71915 C-UD**	75	105	32	40,1	8,1	0,7
	7015 A-UO	**7015 A-UX**	**7015 A-UD**	75	115	40	74,9	34,9	1,72
	7015 B-UO	**7015 B-UX**	**7015 B-UD**	75	115	40	99,7	59,7	1,72
	7015 C-UO	**7015 C-UX**	**7015 C-UD**	75	115	40	45,5	5,5	1,72
	7215 A-UO	**7215 A-UX**	**7215 A-UD**	75	130	50	84,2	34,2	2,64
	7215 B-UO	**7215 B-UX**	**7215 B-UD**	75	130	50	111	61	2,64
	7215 C-UO	**7215 C-UX**	**7215 C-UD**	75	130	50	52,5	2,5	2,64
	7315 A-UO	**7315 A-UX**	**7315 A-UD**	75	160	74	104,9	30,9	6,94
	7315 B-UO	**7315 B-UX**	**7315 B-UD**	75	160	74	135,6	61,6	6,94
	7315 C-UO	**7315 C-UX**	**7315 C-UD**	75	160	74	68,5	5,5	6,94
	7415 A-UO	**7415 A-UX**	**7415 A-UD**	75	190	90	122,7	32,7	11,8
	7415 B-UO	**7415 B-UX**	**7415 B-UD**	75	190	90	157,9	67,9	11,8
80	**71916 C-UO**	**71916 C-UX**	**71916 C-UD**	80	110	32	41,5	9,5	0,74
	7016 A-UO	**7016 A-UX**	**7016 A-UD**	80	125	44	81,2	37,2	2,22
	7016 B-UO	**7016 B-UX**	**7016 B-UD**	80	125	44	108	64	2,22
	7016 C-UO	**7016 C-UX**	**7016 C-UD**	80	125	44	49,5	5,5	2,22
	7216 A-UO	**7216 A-UX**	**7216 A-UD**	80	140	52	89,5	37,5	3,14
	7216 B-UO	**7216 B-UX**	**7216 B-UD**	80	140	52	118,3	66,3	3,14
	7216 C-UO	**7216 C-UX**	**7216 C-UD**	80	140	52	55,5	3,5	3,14
	7316 A-UO	**7316 A-UX**	**7316 A-UD**	80	170	78	111,2	33,2	8,26
	7316 B-UO	**7316 B-UX**	**7316 B-UD**	80	170	78	143,9	65,9	8,26
	7316 C-UO	**7316 C-UX**	**7316 C-UD**	80	170	78	72,5	5,5	8,26
	7416 A-UO	**7416 A-UX**	**7416 A-UD**	80	200	96	130	34	12
	7416 B-UO	**7416 B-UX**	**7416 B-UD**	80	200	96	167,2	71,2	12
85	**71917 C-UO**	**71917 C-UX**	**71917 C-UD**	85	120	36	45,5	9,5	1,06
	7017 A-UO	**7017 A-UX**	**7017 A-UD**	85	130	44	84,7	40,7	2,5
	7017 B-UO	**7017 B-UX**	**7017 B-UD**	85	130	44	113	69	2,5
	7017 C-UO	**7017 C-UX**	**7017 C-UD**	85	130	44	51,1	7,1	2,5
	7217 A-UO	**7217 A-UX**	**7217 A-UD**	85	150	56	95,9	39,9	4,02
	7217 B-UO	**7217 B-UX**	**7217 B-UD**	85	150	56	126,6	70,6	4,02
	7217 C-UO	**7217 C-UX**	**7217 C-UD**	85	150	56	59,5	3,5	4,02
	7317 A-UO	**7317 A-UX**	**7317 A-UD**	85	180	82	117,5	35,5	9,82
	7317 B-UO	**7317 B-UX**	**7317 B-UD**	85	180	82	152,2	70,2	9,82
	7317 C-UO	**7317 C-UX**	**7317 C-UD**	85	180	82	76,5	5,5	9,82
	7417 A-UO	**7417 A-UX**	**7417 A-UD**	85	210	104	137,5	33,5	17,08
	7417 B-UO	**7417 B-UX**	**7417 B-UD**	85	210	104	176,2	72,2	17,08
90	**71918 C-UO**	**71918 C-UX**	**71918 C-UD**	90	125	36	46,8	10,8	1,1
	7018 A-UO	**7018 A-UX**	**7018 A-UD**	90	140	48	90,4	42,4	3,16
	7018 B-UO	**7018 B-UX**	**7018 B-UD**	90	140	48	120,5	72,5	3,16
	7018 C-UO	**7018 C-UX**	**7018 C-UD**	90	140	48	54,8	6,8	3,16

- warehouse - order - phone

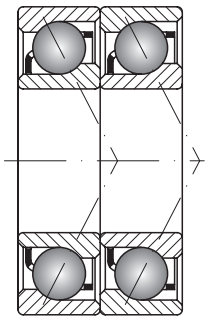

"Tandem" system

Basic load ratings [kN]		Limiting speed [rpm]		Basic makes*						Basic bearing No.
dyn. C	stat. C_0	grease	oil	-	TN	T	M	P5	P4	
47	58	7800	11000	✓	✓	✓	✓	✓	✓	**71914 C**
69,3	78,7	5300	6600	✓	✓	✓	✓	✓	✓	**7014 A**
62,1	71,1	4000	5300	✓	✓	✓	✓	✓	✓	**7014 B**
76,2	86	7300	9700	✓	✓	✓	✓	✓	✓	**7014 C**
113	111	4900	6100	✓	✓	✓	✓	✓	✓	**7214 A**
103	101	3700	4900	✓	✓	✓	✓	✓	✓	**7214 B**
123	120	6700	8900	✓	✓	✓	✓	✓	✓	**7214 C**
191	172	4300	5400	✓	✓	✓	✓	✓	✓	**7314 A**
175	158	3200	4300	✓	✓	✓	✓	✓	✓	**7314 B**
205	184	5900	7900	✓	✓	✓	✓	✓	✓	**7314 C**
242	230	2700	3900	✓	✓	✓	✓	✓	✓	**7414 A**
241	237	2300	3500	✓	✓	✓	✓	✓	✓	**7414 B**
47,7	60,9	7400	9800	✓	✓	✓	✓	✓	✓	**71915 C**
70,9	83,4	5000	6300	✓	✓	✓	✓	✓	✓	**7015 A**
63,5	75,2	3800	5000	✓	✓	✓	✓	✓	✓	**7015 B**
78	91,3	6900	9200	✓	✓	✓	✓	✓	✓	**7015 C**
129	130	4600	5800	✓	✓	✓	✓	✓	✓	**7215 A**
116	119	3500	4600	✓	✓	✓	✓	✓	✓	**7215 B**
140	141	6400	8500	✓	✓	✓	✓	✓	✓	**7215 C**
208	194	4000	5000	✓	✓	✓	✓	✓	✓	**7315 A**
191	178	3000	4000	✓	✓	✓	✓	✓	✓	**7315 B**
223	208	5500	7400	✓	✓	✓	✓	✓	✓	**7315 C**
278	282	2500	3600	✓	✓	✓	✓	✓	✓	**7415 A**
257	261	2200	3300	✓	✓	✓	✓	✓	✓	**7415 B**
48,4	63,2	7000	9300	✓	✓	✓	✓	✓	✓	**71916 C**
86,7	101	4600	5800	✓	✓	✓	✓	✓	✓	**7016 A**
77,7	91,3	3500	4600	✓	✓	✓	✓	✓	✓	**7016 B**
95,3	111	6400	8500	✓	✓	✓	✓	✓	✓	**7016 C**
139	143	4300	5400	✓	✓	✓	✓	✓	✓	**7216 A**
125	130	3200	4300	✓	✓	✓	✓	✓	✓	**7216 B**
151	155	5900	7900	✓	✓	✓	✓	✓	✓	**7216 C**
226	218	3800	4700	✓	✓	✓	✓	✓	✓	**7316 A**
207	200	2800	3800	✓	✓	✓	✓	✓	✓	**7316 B**
242	233	5200	6900	✓	✓	✓	✓	✓	✓	**7316 C**
313	332	2400	3400	✓	✓	✓	✓	✓	✓	**7416 A**
290	307	2100	3100	✓	✓	✓	✓	✓	✓	**7416 B**
63,2	81,3	6500	8600	✓	✓	✓	✓	✓	✓	**71917 C**
88,6	107	4400	5500	✓	✓	✓	✓	✓	✓	**7017 A**
79,3	96,7	3300	4400	✓	✓	✓	✓	✓	✓	**7017 B**
97,6	117	6000	8000	✓	✓	✓	✓	✓	✓	**7017 C**
160	167	4000	5000	✓	✓	✓	✓	✓	✓	**7217 A**
145	152	3000	4000	✓	✓	✓	✓	✓	✓	**7217 B**
174	181	5500	7400	✓	✓	✓	✓	✓	✓	**7217 C**
243	243	3500	4400	✓	✓	✓	✓	✓	✓	**7317 A**
223	223	2700	3500	✓	✓	✓	✓	✓	✓	**7317 B**
261	261	4900	6500	✓	✓	✓	✓	✓	✓	**7317 C**
331	360	2300	3300	✓	✓	✓	✓	✓	✓	**7417 A**
307	334	2000	3000	✓	✓	✓	✓	✓	✓	**7417 B**
64,3	85,2	6200	8200	✓	✓	✓	✓	✓	✓	**71918 C**
106	127	4100	5100	✓	✓	✓	✓	✓	✓	**7018 A**
94,9	114	3100	4100	✓	✓	✓	✓	✓	✓	**7018 B**
116	138	5700	7500	✓	✓	✓	✓	✓	✓	**7018 C**

* Other products also available

https://nppnovoteh.com

2. ANGULAR CONTACT RADIAL BALL BEARINGS

2.2 Single-row angular-contact ball bearings
– for assembly in pairs



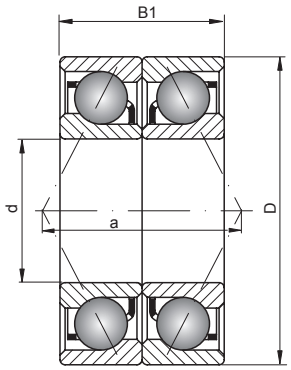

"O" system

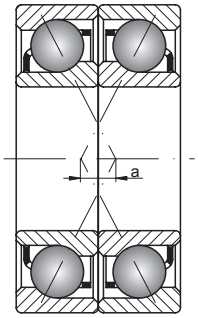

"X" system

90 – 120 mm

Shaft [mm]	Bearing arrangement			Dimensions [mm]					Weight of a system [kg]
	O system	X system	Tandem system	d	D	B1	a(o)	a(x)	
90 cont.	**7218 A-UO**	**7218 A-UX**	**7218 A-UD**	90	160	60	102,2	42,2	4,94
	7218 B-UO	**7218 B-UX**	**7218 B-UD**	90	160	60	134,9	74,9	4,94
	7218 C-UO	**7218 C-UX**	**7218 C-UD**	90	160	60	63,5	3,5	4,94
	7318 A-UO	**7318 A-UX**	**7318 A-UD**	90	190	86	123,9	37,9	11,48
	7318 B-UO	**7318 B-UX**	**7318 B-UD**	90	190	86	160,5	74,5	11,48
	7318 C-UO	**7318 C-UX**	**7318 C-UD**	90	190	86	80,5	5,5	11,48
	7418 A-UO	**7418 A-UX**	**7418 A-UD**	90	225	108	145	37	22,8
	7418 B-UO	**7418 B-UX**	**7418 B-UD**	90	225	108	186,2	78,2	22,8
95	**71919 C-UO**	**71919 C-UX**	**71919 C-UD**	95	130	36	48,1	12,1	1,16
	7019 A-UO	**7019 A-UX**	**7019 A-UD**	95	145	48	94,5	46,5	3,34
	7019 B-UO	**7019 B-UX**	**7019 B-UD**	95	145	48	126,4	78,4	3,34
	7019 C-UO	**7019 C-UX**	**7019 C-UD**	95	145	48	56,7	8,7	3,34
	7219 A-UO	**7219 A-UX**	**7219 A-UD**	95	170	64	108,5	44,5	6,04
	7219 B-UO	**7219 B-UX**	**7219 B-UD**	95	170	64	143,2	79,2	6,04
	7219 C-UO	**7219 C-UX**	**7219 C-UD**	95	170	64	67,5	3,5	6,04
	7319 A-UO	**7319 A-UX**	**7319 A-UD**	95	200	90	130,2	40,2	13,34
	7319 B-UO	**7319 B-UX**	**7319 B-UD**	95	200	90	168,8	78,8	13,34
	7319 C-UO	**7319 C-UX**	**7319 C-UD**	95	200	90	84,5	5,5	13,34
100	**71920 C-UO**	**71920 C-UX**	**71920 C-UD**	100	140	40	52,1	12,1	1,58
	7020 A-UO	**7020 A-UX**	**7020 A-UD**	100	150	48	96,2	48,2	3,44
	7020 B-UO	**7020 B-UX**	**7020 B-UD**	100	150	48	128,9	80,9	3,44
	7020 C-UO	**7020 C-UX**	**7020 C-UD**	100	150	48	57,5	9,5	3,44
	7220 A-UO	**7220 A-UX**	**7220 A-UD**	100	180	68	115,4	47,4	7,24
	7220 B-UO	**7220 B-UX**	**7220 B-UD**	100	180	68	152,3	84,3	7,24
	7220 C-UO	**7220 C-UX**	**7220 C-UD**	100	180	68	71,8	3,8	7,24
	7320 A-UO	**7320 A-UX**	**7320 A-UD**	100	215	94	138,8	44,8	16,2
	7320 B-UO	**7320 B-UX**	**7320 B-UD**	100	215	94	180,4	86,4	16,2
	7320 C-UO	**7320 C-UX**	**7320 C-UD**	100	215	94	89,6	4,4	16,2
105	**71921 C-UO**	**71921 C-UX**	**71921 C-UD**	105	145	40	53,5	13,5	1,6
	7021 A-UO	**7021 A-UX**	**7021 A-UD**	105	160	52	103,7	51,7	4,32
	7021 B-UO	**7021 B-UX**	**7021 B-UD**	105	160	52	137,2	85,2	4,32
	7021 C-UO	**7021 C-UX**	**7021 C-UD**	105	160	52	62	10	4,32
	7221 A-UO	**7221 A-UX**	**7221 A-UD**	105	190	72	122,1	50,1	8,58
	7221 B-UO	**7221 B-UX**	**7221 B-UD**	105	190	72	161	89	8,58
	7221 C-UO	**7221 C-UX**	**7221 C-UD**	105	190	72	75,9	3,9	8,58
	7321 A-UO	**7321 A-UX**	**7321 A-UD**	105	225	98	144,3	46,3	18,56
	7321 B-UO	**7321 B-UX**	**7321 B-UD**	105	225	98	187,5	89,5	18,56
	7321 C-UO	**7321 C-UX**	**7321 C-UD**	105	225	98	93,2	4,8	18,56
110	**71922 C-UO**	**71922 C-UX**	**71922 C-UD**	110	150	40	54,8	14,8	1,6
	7022 A-UO	**7022 A-UX**	**7022 A-UD**	110	170	56	108,9	52,9	5,42
	7022 B-UO	**7022 B-UX**	**7022 B-UD**	110	170	56	145,5	89,5	5,42
	7022 C-UO	**7022 C-UX**	**7022 C-UD**	110	170	56	65,5	9,5	5,42
	7222 A-UO	**7222 A-UX**	**7222 A-UD**	110	200	76	128,7	52,7	10,06
	7222 B-UO	**7222 B-UX**	**7222 B-UD**	110	200	76	169,7	93,7	10,06
	7222 C-UO	**7222 C-UX**	**7222 C-UD**	110	200	76	80,1	4,1	10,06
	7322 A-UO	**7322 A-UX**	**7322 A-UD**	110	240	100	152,7	52,7	21,74
	7322 B-UO	**7322 B-UX**	**7322 B-UD**	110	240	100	199,3	99,3	21,74
	7322 C-UO	**7322 C-UX**	**7322 C-UD**	110	240	100	97,7	2,3	21,74
120	**71924 C-UO**	**71924 C-UX**	**71924 C-UD**	120	165	44	60,2	16,2	2,4
	7024 A-UO	**7024 A-UX**	**7024 A-UD**	120	180	56	114,6	58,6	5,88
	7024 B-UO	**7024 B-UX**	**7024 B-UD**	120	180	56	153,9	97,9	5,88

- warehouse - order - phone

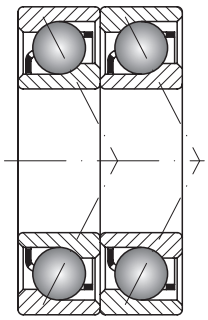

"Tandem" system

Basic load ratings [kN]		Limiting speed [rpm]		Basic makes*						Basic bearing No.
dyn. C	stat. C_0	grease	oil	-	TN	T	M	P5	P4	
183	193	3800	4700	●	◴	◴	◴	◝	◝	**7218 A**
166	176	2800	3800	●	◴	◴	◴	◝	◝	**7218 B**
199	209	5200	6900	●	◴	◴	◴	◝	◝	**7218 C**
261	270	3300	4200	●	◴	◴	◴	◝	◝	**7318 A**
240	248	2500	3300	●	◴	◴	◴	◝	◝	**7318 B**
281	289	4600	6100	●	◴	◴	◴	◝	◝	**7318 C**
351	393	2100	3100	◝	◝	◝	◝	◝	◝	**7418 A**
325	364	1800	2800	◝	◝	◝	◝	◝	◝	**7418 B**
65,3	88,3	5900	7900	◝	◝	◝	◝	◝	◝	**71919 C**
108	134	3900	4800	●	◴	◴	◴	◝	◝	**7019 A**
96,8	121	2900	3900	●	◴	◴	◴	◝	◝	**7019 B**
119	147	5300	7100	●	◴	◴	◴	◝	◝	**7019 C**
198	207	3500	4400	●	◴	◴	◴	◝	◝	**7219 A**
180	188	2700	3500	●	◴	◴	◴	◝	◝	**7219 B**
216	224	4900	6500	●	◴	◴	◴	◝	◝	**7219 C**
280	298	3200	4000	●	◴	◴	◴	◝	◝	**7319 A**
256	273	2400	3200	●	◴	◴	◴	◝	◝	**7319 B**
300	319	4400	5800	●	◴	◴	◴	◝	◝	**7319 C**
90,2	117	5500	7400	◝	◝	◝	◝	◝	◝	**71920 C**
111	141	3800	4700	●	◴	◴	◴	◝	◝	**7020 A**
99,4	127	2800	3800	●	◴	◴	◴	◝	◝	**7020 B**
122	154	5200	6900	●	◴	◴	◴	◝	◝	**7020 C**
223	235	3300	4100	●	◴	◴	◴	◝	◝	**7220 A**
202	214	2500	3300	●	◴	◴	◴	◝	◝	**7220 B**
242	254	4600	6100	●	◴	◴	◴	◝	◝	**7220 C**
298	323	2900	3600	●	◴	◴	◴	◝	◝	**7320 A**
274	297	2200	2900	●	◴	◴	◴	◝	◝	**7320 B**
320	346	4000	5300	●	◴	◴	◴	◝	◝	**7320 C**
92,1	123	5300	7100	◝	◝	◝	◝	◝	◝	**71921 C**
130	164	3500	4400	◴	◝	◝	◝	◝	◝	**7021 A**
116	148	2600	3500	◴	◝	◝	◝	◝	◝	**7021 B**
143	179	4800	6400	◴	◝	◝	◝	◝	◝	**7021 C**
243	265	3100	3900	◝	◝	◝	◝	◝	◝	**7221 A**
220	241	2300	3100	◝	◝	◝	◝	◝	◝	**7221 B**
264	287	4300	5700	◝	◝	◝	◝	◝	◝	**7221 C**
337	386	2800	3500	◴	◝	◝	◝	◝	◝	**7321 A**
310	355	2100	2800	◴	◝	◝	◝	◝	◝	**7321 B**
362	413	3900	5100	◴	◝	◝	◝	◝	◝	**7321 C**
93,8	129	5100	6800	◝	◝	◝	◝	◝	◝	**71922 C**
149	186	3300	4200	◴	◝	◝	◝	◝	◝	**7022 A**
134	167	2500	3300	◴	◝	◝	◝	◝	◝	**7022 B**
164	203	4600	6100	◴	◝	◝	◝	◝	◝	**7022 C**
263	297	3000	3700	◝	◝	◝	◝	◝	◝	**7222 A**
238	270	2200	3000	◝	◝	◝	◝	◝	◝	**7222 B**
286	321	4100	5400	◝	◝	◝	◝	◝	◝	**7222 C**
377	452	2600	3200	◴	◝	◝	◝	◝	◝	**7322 A**
346	416	1900	2600	◴	◝	◝	◝	◝	◝	**7322 B**
404	484	3500	4700	◴	◝	◝	◝	◝	◝	**7322 C**
117	162	4700	6200	◝	◝	◝	◝	◝	◝	**71924 C**
157	206	3100	3900	◴	◝	◝	◝	◝	◝	**7024 A**
140	186	2300	3100	◴	◝	◝	◝	◝	◝	**7024 B**

* Other products also available

https://nppnovoteh.com

2. ANGULAR CONTACT RADIAL BALL BEARINGS

2.2 Single-row angular-contact ball bearings
– for assembly in pairs



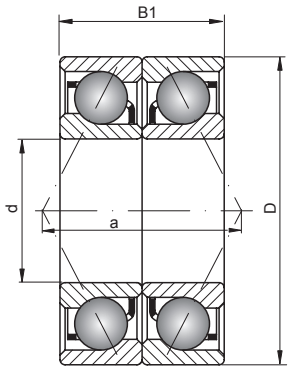

"O" system

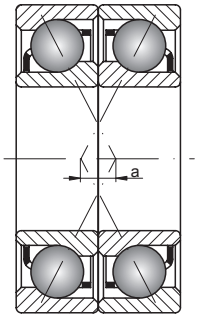

"X" system

120 – 170 mm

Shaft [mm]	Bearing arrangement			Dimensions [mm]					Weight of a system [kg]
	O system	X system	Tandem system	d	D	B1	a(o)	a(x)	
120 cont.	**7024 C-UO**	**7024 C-UX**	**7024 C-UD**	120	180	56	68,2	12,2	5,88
	7224 A-UO	**7224 A-UX**	**7224 A-UD**	120	215	80	137	57	14,16
	7224 B-UO	**7224 B-UX**	**7224 B-UD**	120	215	80	180,5	100,5	14,16
	7224 C-UO	**7224 C-UX**	**7224 C-UD**	120	215	80	85	5	14,16
	7324 A-UO	**7324 A-UX**	**7324 A-UD**	120	260	110	164,7	54,7	33,24
	7324 B-UO	**7324 B-UX**	**7324 B-UD**	120	260	110	214,4	104,4	33,24
	7324 C-UO	**7324 C-UX**	**7324 C-UD**	120	260	110	105,9	4,1	33,24
130	**71926 C-UO**	**71926 C-UX**	**71926 C-UD**	130	180	48	65,5	17,5	3
	7026 A-UO	**7026 A-UX**	**7026 A-UD**	130	200	66	128,3	62,3	8,86
	7026 B-UO	**7026 B-UX**	**7026 B-UD**	130	200	66	171,5	105,5	8,86
	7026 C-UO	**7026 C-UX**	**7026 C-UD**	130	200	66	77,2	11,2	8,86
	7226 A-UO	**7226 A-UX**	**7226 A-UD**	130	230	80	143,9	63,9	16,2
	7226 B-UO	**7226 B-UX**	**7226 B-UD**	130	230	80	191	111	16,2
	7226 C-UO	**7226 C-UX**	**7226 C-UD**	130	230	80	88,2	8,2	16,2
	7326 A-UO	**7326 A-UX**	**7326 A-UD**	130	280	116	177,5	61,5	39,8
	7326 B-UO	**7326 B-UX**	**7326 B-UD**	130	280	116	230	114	39,8
	7326 C-UO	**7326 C-UX**	**7326 C-UD**	130	280	116	112,9	3,1	39,8
140	**71928 C-UO**	**71928 C-UX**	**71928 C-UD**	140	190	48	68,2	20,2	3,2
	7028 A-UO	**7028 A-UX**	**7028 A-UD**	140	210	66	134,1	68,1	9,4
	7028 B-UO	**7028 B-UX**	**7028 B-UD**	140	210	66	179,8	113,8	9,4
	7028 C-UO	**7028 C-UX**	**7028 C-UD**	140	210	66	79,9	13,9	9,4
	7228 A-UO	**7228 A-UX**	**7228 A-UD**	140	250	84	154,6	70,6	19,9
	7228 B-UO	**7228 B-UX**	**7228 B-UD**	140	250	84	205,6	121,6	19,9
	7228 C-UO	**7228 C-UX**	**7228 C-UD**	140	250	84	94,2	10,2	19,9
	7328 A-UO	**7328 A-UX**	**7328 A-UD**	140	300	124	189	65	48,62
	7328 B-UO	**7328 B-UX**	**7328 B-UD**	140	300	124	246,6	122,6	48,62
	7328 C-UO	**7328 C-UX**	**7328 C-UD**	140	300	124	120,9	3,1	48,62
150	**71930 C-UO**	**71930 C-UX**	**71930 C-UD**	150	210	56	76,2	20,2	5
	7030 A-UO	**7030 A-UX**	**7030 A-UD**	150	225	70	144,2	74,2	10,98
	7030 B-UO	**7030 B-UX**	**7030 B-UD**	150	225	70	192,3	122,3	10,98
	7030 C-UO	**7030 C-UX**	**7030 C-UD**	150	225	70	85,6	15,6	10,98
	7230 A-UO	**7230 A-UX**	**7230 A-UD**	150	270	90	166,3	76,3	24,92
	7230 B-UO	**7230 B-UX**	**7230 B-UD**	150	270	90	221,2	131,2	24,92
	7230 C-UO	**7230 C-UX**	**7230 C-UD**	150	270	90	101,3	11,3	24,92
	7330 A-UO	**7330 A-UX**	**7330 A-UD**	150	320	130	200,7	70,7	56,72
	7330 B-UO	**7330 B-UX**	**7330 B-UD**	150	320	130	262,2	132,2	56,72
	7330 C-UO	**7330 C-UX**	**7330 C-UD**	150	320	130	128	2	56,72
160	**71932 C-UO**	**71932 C-UX**	**71932 C-UD**	160	220	56	78,9	22,9	5,4
	7032 A-UO	**7032 A-UX**	**7032 A-UD**	160	240	76	153,5	77,5	13,34
	7032 B-UO	**7032 B-UX**	**7032 B-UD**	160	240	76	205,8	129,8	13,34
	7032 C-UO	**7032 C-UX**	**7032 C-UD**	160	240	76	91,6	15,6	13,34
	7232 A-UO	**7232 A-UX**	**7232 A-UD**	160	290	96	177,9	81,9	30,98
	7232 B-UO	**7232 B-UX**	**7232 B-UD**	160	290	96	236,8	140,8	30,98
	7232 C-UO	**7232 C-UX**	**7232 C-UD**	160	290	96	108,3	12,3	30,98
	7332 A-UO	**7332 A-UX**	**7332 A-UD**	160	340	136	212,3	76,3	68,3
	7332 B-UO	**7332 B-UX**	**7332 B-UD**	160	340	136	277,8	141,8	68,3
	7332 C-UO	**7332 C-UX**	**7332 C-UD**	160	340	136	135	1	68,3
170	**7034 A-UO**	**7034 A-UX**	**7034 A-UD**	170	260	84	166,2	82,2	17,84
	7034 B-UO	**7034 B-UX**	**7034 B-UD**	170	260	84	222,4	138,4	17,84
	7034 C-UO	**7034 C-UX**	**7034 C-UD**	170	260	84	99,6	15,6	17,84
	7234 A-UO	**7234 A-UX**	**7234 A-UD**	170	310	104	190,6	86,6	39,38

- warehouse - order - phone

https://nppnovoteh.com

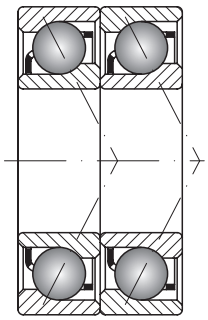

"Tandem" system



Basic load ratings [kN]		Limiting speed [rpm]		Basic makes*						Basic bearing No.
dyn. C	stat. C_0	grease	oil	-	TN	T	M	P5	P4	
173	226	4300	5700	◴	●	●	●	●	●	**7024 C**
283	332	2700	3400	●	●	●	●	●	●	**7224 A**
257	302	2100	2800	●	●	●	●	●	●	**7224 B**
308	359	3800	5000	●	●	●	●	●	●	**7224 C**
400	504	2400	3000	◴	●	●	●	●	●	**7324 A**
366	462	1800	2400	◴	●	●	●	●	●	**7324 B**
431	542	3300	4400	◴	●	●	●	●	●	**7324 C**
142	200	4300	5700	●	●	●	●	●	●	**71926 C**
191	251	2800	3500	◴	●	●	●	●	●	**7026 A**
171	226	2100	2800	◴	●	●	●	●	●	**7026 B**
210	274	3900	5100	◴	●	●	●	●	●	**7026 C**
318	395	2500	3200	●	●	●	●	●	●	**7226 A**
288	360	1900	2500	●	●	●	●	●	●	**7226 B**
346	428	3500	4700	●	●	●	●	●	●	**7226 C**
489	659	2200	2700	◴	●	●	●	●	●	**7326 A**
406	536	1600	2200	◴	●	●	●	●	●	**7326 B**
478	629	3000	4000	◴	●	●	●	●	●	**7326 C**
143	210	4000	5400	●	●	●	●	●	●	**71928 C**
194	265	2600	3300	◴	●	●	●	●	●	**7028 A**
174	237	2000	2600	◴	●	●	●	●	●	**7028 B**
214	290	3600	4800	◴	●	●	●	●	●	**7028 C**
355	468	2300	2900	●	●	●	●	●	●	**7228 A**
320	426	1700	2300	●	●	●	●	●	●	**7228 B**
386	508	3200	4300	●	●	●	●	●	●	**7228 C**
535	748	2000	2500	◴	●	●	●	●	●	**7328 A**
491	688	1500	2000	◴	●	●	●	●	●	**7328 B**
573	802	2800	3700	◴	●	●	●	●	●	**7328 C**
187	263	3700	4900	●	●	●	●	●	●	**71930 C**
222	308	2400	3000	◴	●	●	●	●	●	**7030 A**
199	275	1800	2400	◴	●	●	●	●	●	**7030 B**
245	337	3300	4400	◴	●	●	●	●	●	**7030 C**
403	560	2100	2700	●	●	●	●	●	●	**7230 A**
365	509	1600	2100	●	●	●	●	●	●	**7230 B**
439	607	2900	3900	●	●	●	●	●	●	**7230 C**
565	829	1900	2300	●	●	●	●	●	●	**7330 A**
516	760	1400	1900	●	●	●	●	●	●	**7330 B**
607	891	2600	3400	●	●	●	●	●	●	**7330 C**
196	289	3500	4700	●	●	●	●	●	●	**71932 C**
252	353	2300	2800	●	●	●	●	●	●	**7032 A**
225	316	1700	2300	●	●	●	●	●	●	**7032 B**
278	386	3100	4100	●	●	●	●	●	●	**7032 C**
374	525	2000	2500	●	●	●	●	●	●	**7232 A**
386	557	1500	2000	●	●	●	●	●	●	**7232 B**
465	665	2700	3600	●	●	●	●	●	●	**7232 C**
592	909	1700	2200	●	●	●	●	●	●	**7332 A**
540	831	1300	1700	●	●	●	●	●	●	**7332 B**
640	980	2400	3200	●	●	●	●	●	●	**7332 C**
302	429	2100	2600	●	●	●	●	●	●	**7034 A**
270	386	1600	2100	●	●	●	●	●	●	**7034 B**
332	469	2900	3800	●	●	●	●	●	●	**7034 C**
441	661	1800	2300	●	●	●	●	●	●	**7234 A**

* Other products also available

https://nppnovoteh.com

2. ANGULAR CONTACT RADIAL BALL BEARINGS

2.2 Single-row angular-contact ball bearings
– for assembly in pairs



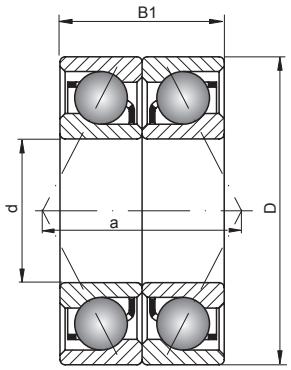

"O" system

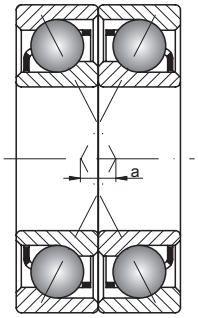

"X" system

170 – 380 mm

Shaft [mm]	Bearing arrangement			Dimensions [mm]					Weight of a system [kg]
	O system	X system	Tandem system	d	D	B1	a(o)	a(x)	
170 cont.	**7234 B-UO**	**7234 B-UX**	**7234 B-UD**	170	310	104	253,4	149,4	39,38
	7234 C-UO	**7234 C-UX**	**7234 C-UD**	170	310	104	116,3	12,3	39,38
	7334 A-UO	**7334 A-UX**	**7334 A-UD**	170	360	144	225	81	80,72
	7334 B-UO	**7334 B-UX**	**7334 B-UD**	170	360	144	294,4	150,4	80,72
	7334 C-UO	**7334 C-UX**	**7334 C-UD**	170	360	144	143	1	80,72
180	**7036 A-UO**	**7036 A-UX**	**7036 A-UD**	180	280	92	178,8	86,8	22,56
	7036 B-UO	**7036 B-UX**	**7036 B-UD**	180	280	92	239	147	22,56
	7036 C-UO	**7036 C-UX**	**7036 C-UD**	180	280	92	107,6	15,6	22,56
	7236 A-UO	**7236 A-UX**	**7236 A-UD**	180	320	104	196,3	92,3	40,52
	7236 B-UO	**7236 B-UX**	**7236 B-UD**	180	320	104	261,8	157,8	40,52
	7236 C-UO	**7236 C-UX**	**7236 C-UD**	180	320	104	119	15	40,52
	7336 A-UO	**7336 A-UX**	**7336 A-UD**	180	380	150	236,7	86,7	93,44
	7336 B-UO	**7336 B-UX**	**7336 B-UD**	180	380	150	309,9	159,9	93,44
190	**7038 A-UO**	**7038 A-UX**	**7038 A-UD**	190	290	92	184,6	92,6	24,2
	7038 B-UO	**7038 B-UX**	**7038 B-UD**	190	290	92	247,4	155,4	24,2
	7038 C-UO	**7038 C-UX**	**7038 C-UD**	190	290	92	110,3	18,3	24,2
	7238 A-UO	**7238 A-UX**	**7238 A-UD**	190	340	110	208	98	48,62
	7238 B-UO	**7238 B-UX**	**7238 B-UD**	190	340	110	277,4	167,4	48,62
	7238 C-UO	**7238 C-UX**	**7238 C-UD**	190	340	110	126	16	48,62
	7338 A-UO	**7338 A-UX**	**7338 A-UD**	190	400	156	248,3	92,3	107,7
	7338 B-UO	**7338 B-UX**	**7338 B-UD**	190	400	156	325,5	169,5	107,7
200	**7040 A-UO**	**7040 A-UX**	**7040 A-UD**	200	310	102	198,3	96,3	31,18
	7040 B-UO	**7040 B-UX**	**7040 B-UD**	200	310	102	265	163	31,18
	7040 C-UO	**7040 C-UX**	**7040 C-UD**	200	310	102	119,3	17,3	31,18
	7240 A-UO	**7240 A-UX**	**7240 A-UD**	200	360	116	219,7	103,7	57,64
	7240 B-UO	**7240 B-UX**	**7240 B-UD**	200	360	116	292,9	176,9	57,64
	7240 C-UO	**7240 C-UX**	**7240 C-UD**	200	360	116	133	17	57,64
	7340 A-UO	**7340 A-UX**	**7340 A-UD**	200	420	160	259	99	121,02
	7340 B-UO	**7340 B-UX**	**7340 B-UD**	200	420	160	340,1	180,1	121,02
220	**7044 A-UO**	**7044 A-UX**	**7044 A-UD**	220	340	112	217,8	105,8	37
	7044 B-UO	**7044 B-UX**	**7044 B-UD**	220	340	112	290,9	178,9	37
240	**7048 A-UO**	**7048 A-UX**	**7048 A-UD**	240	360	112	229,2	117,2	39,4
	7048 B-UO	**7048 B-UX**	**7048 B-UD**	240	360	112	307,7	195,7	39,4
260	**7052 A-UO**	**7052 A-UX**	**7052 A-UD**	260	400	130	256,7	126,7	57,4
	7052 B-UO	**7052 B-UX**	**7052 B-UD**	260	400	130	341,9	211,9	57,4
280	**7056 A-UO**	**7056 A-UX**	**7056 A-UD**	280	420	130	267,1	137,1	60,8
	7056 B-UO	**7056 B-UX**	**7056 B-UD**	280	420	130	358,7	228,7	60,8
300	**7060 A-UO**	**7060 A-UX**	**7060 A-UD**	300	460	148	293,4	145,4	87,4
	7060 B-UO	**7060 B-UX**	**7060 B-UD**	300	460	148	392,9	244,9	87,4
320	**7064 A-UO**	**7064 A-UX**	**7064 A-UD**	320	480	148	304,9	156,9	92
	7064 B-UO	**7064 B-UX**	**7064 B-UD**	320	480	148	409,6	261,6	92
340	**7068 A-UO**	**7068 A-UX**	**7068 A-UD**	340	520	164	330,3	166,3	123,6
	7068 B-UO	**7068 B-UX**	**7068 B-UD**	340	520	164	442,8	278,8	123,6
360	**7072 A-UO**	**7072 A-UX**	**7072 A-UD**	360	540	164	341,8	177,8	129,2
	7072 B-UO	**7072 B-UX**	**7072 B-UD**	360	540	164	459,6	295,6	129,2
380	**7076 A-UO**	**7076 A-UX**	**7076 A-UD**	380	560	164	353,4	189,4	134,4
	7076 B-UO	**7076 B-UX**	**7076 B-UD**	380	560	164	476,4	312,4	134,4

- warehouse - order - phone

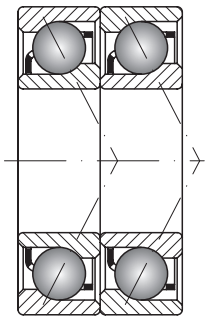

"Tandem" system

Basic load ratings [kN]		Limiting speed [rpm]		Basic makes*						Basic bearing No.
dyn. C	stat. C_0	grease	oil	-	TN	T	M	P5	P4	
398	600	1400	1800	✓	✓	✓	✓	✓	✓	**7234 B**
482	719	2500	3300	✓	✓	✓	✓	✓	✓	**7234 C**
631	969	1600	2000	✓	✓	✓	✓	✓	✓	**7334 A**
577	888	1200	1600	✓	✓	✓	✓	✓	✓	**7334 B**
679	1040	2200	3000	✓	✓	✓	✓	✓	✓	**7334 C**
344	506	1900	2400	✓	✓	✓	✓	✓	✓	**7036 A**
308	457	1400	1900	✓	✓	✓	✓	✓	✓	**7036 B**
378	553	2600	3500	✓	✓	✓	✓	✓	✓	**7036 C**
477	724	1700	2200	✓	✓	✓	✓	✓	✓	**7236 A**
430	657	1300	1700	✓	✓	✓	✓	✓	✓	**7236 B**
520	786	2400	3200	✓	✓	✓	✓	✓	✓	**7236 C**
665	1070	1500	1900	✓	✓	✓	✓	✓	✓	**7336 A**
606	976	1100	1500	✓	✓	✓	✓	✓	✓	**7336 B**
353	535	1800	2300	✓	✓	✓	✓	✓	✓	**7038 A**
316	483	1400	1800	✓	✓	✓	✓	✓	✓	**7038 B**
388	585	2500	3300	✓	✓	✓	✓	✓	✓	**7038 C**
493	779	1600	2000	✓	✓	✓	✓	✓	✓	**7238 A**
443	706	1200	1600	✓	✓	✓	✓	✓	✓	**7238 B**
538	848	2200	3000	✓	✓	✓	✓	✓	✓	**7238 C**
731	1200	1400	1800	✓	✓	✓	✓	✓	✓	**7338 A**
668	1100	1100	1400	✓	✓	✓	✓	✓	✓	**7338 B**
396	618	1700	2100	✓	✓	✓	✓	✓	✓	**7040 A**
355	558	1300	1700	✓	✓	✓	✓	✓	✓	**7040 B**
435	676	2300	3100	✓	✓	✓	✓	✓	✓	**7040 C**
526	847	1500	1900	✓	✓	✓	✓	✓	✓	**7240 A**
474	768	1100	1500	✓	✓	✓	✓	✓	✓	**7240 B**
575	921	2100	2800	✓	✓	✓	✓	✓	✓	**7240 C**
770	1320	1300	1700	✓	✓	✓	✓	✓	✓	**7340 A**
702	1200	1000	1300	✓	✓	✓	✓	✓	✓	**7340 B**
435	705	1500	1900	✓	✓	✓	✓	✓	✓	**7044 A**
389	636	1100	1500	✓	✓	✓	✓	✓	✓	**7044 B**
443	751	1400	1700	✓	✓	✓	✓	✓	✓	**7048 A**
397	677	1000	1400	✓	✓	✓	✓	✓	✓	**7048 B**
529	956	1200	1500	✓	✓	✓	✓	✓	✓	**7052 A**
473	862	910	1200	✓	✓	✓	✓	✓	✓	**7052 B**
540	1010	1100	1400	✓	✓	✓	✓	✓	✓	**7056 A**
483	906	850	1100	✓	✓	✓	✓	✓	✓	**7056 B**
693	1360	1000	1300	✓	✓	✓	✓	✓	✓	**7060 A**
621	1230	770	1000	✓	✓	✓	✓	✓	✓	**7060 B**
710	1440	950	1200	✓	✓	✓	✓	✓	✓	**7064 A**
636	1300	710	950	✓	✓	✓	✓	✓	✓	**7064 B**
816	1720	860	1100	✓	✓	✓	✓	✓	✓	**7068 A**
731	1550	640	860	✓	✓	✓	✓	✓	✓	**7068 B**
837	1830	800	1000	✓	✓	✓	✓	✓	✓	**7072 A**
750	1650	600	800	✓	✓	✓	✓	✓	✓	**7072 B**
858	1930	750	940	✓	✓	✓	✓	✓	✓	**7076 A**
767	1740	560	750	✓	✓	✓	✓	✓	✓	**7076 B**

* Other products also available

https://nppnovoteh.com

2. ANGULAR CONTACT RADIAL BALL BEARINGS

2.3. Single-row angular-contact high-speed ball bearings



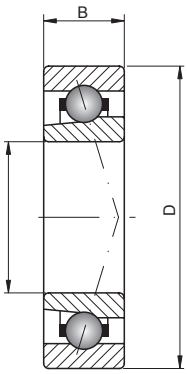

718.. 719.. 70.. 72..

6 – 20 mm

Shaft [mm]	Bearing No.	Series		Dimensions [mm]			Weight [kg]	Basic load ratings [kN]	
		SD	SB	d	D	B		dyn. C	stat. C_0
6	**706 ATBP4**	0	0	6	17	6	0,005	2,28	0,93
	706 CTBP4	0	0	6	17	6	0,005	2,36	0,97
7	**707 CTBP4**	0	0	7	19	6	0,008	2,60	1,14
	707 ATBP4	0	0	7	19	6	0,008	2,50	1,10
8	**708 CTBP4**	0	0	8	22	7	0,010	3,80	1,73
	708 ATBP4	0	0	8	22	7	0,010	3,75	1,66
9	**709 CTBP4**	0	0	9	24	7	0,015	5,20	2,40
	709 ATBP4	0	0	9	24	7	0,015	5,10	2,32
10	**71800 CTBP4**	8	0	10	19	5	0,005	1,90	0,98
	71800 ATBP4	8	0	10	19	5	0,005	1,80	0,93
	71900 CTBP4	9	0	10	22	6	0,009	2,90	1,46
	71900 ATBP4	9	0	10	22	6	0,009	2,90	1,46
	7000 CTBP4	0	0	10	26	8	0,020	4,25	2,08
	7000 ATBP4	0	0	10	26	8	0,020	4,05	2,00
	7200 CTBP4	2	0	10	30	9	0,030	5,85	2,90
	7200 ATBP4	2	0	10	30	9	0,030	5,60	2,80
12	**71801 CTBP4**	8	0	12	21	5	0,010	2,08	1,18
	71801 ATBP4	8	0	12	21	5	0,010	1,96	1,12
	71901 CTBP4	9	0	12	24	6	0,010	3,35	1,86
	71901 ATBP4	9	0	12	24	6	0,010	3,20	1,76
	7001 CTBP4	0	0	12	28	8	0,020	4,75	2,60
	7001 ATBP4	0	0	12	28	8	0,020	4,55	2,50
	7201 CTBP4	2	0	12	32	10	0,040	7,65	3,90
	7201 ATBP4	2	0	12	32	10	0,040	7,35	3,75
15	**71802 CTBP4**	8	0	15	24	5	0,010	2,28	1,50
	71802 ATBP4	8	0	15	24	5	0,010	2,16	1,40
	71902 CTBP4	9	0	15	28	7	0,020	5,00	2,90
	71902 ATBP4	9	0	15	28	7	0,020	4,80	2,75
	7002 CTBP4	0	0	15	32	9	0,030	6,20	3,40
	7002 ATBP4	0	0	15	32	9	0,030	6,00	3,25
	7202 CTBP4	2	0	15	35	11	0,040	9,65	5,00
	7202 ATBP4	2	0	15	35	11	0,040	9,30	4,80
17	**71803 CTBP4**	8	0	17	26	5	0,010	2,32	1,60
	71803 ATBP4	8	0	17	26	5	0,010	2,20	1,53
	71903 CTBP4	9	0	17	30	7	0,020	5,30	3,15
	71903 ATBP4	9	0	17	30	7	0,020	5,00	3,00
	7003 CTBP4	0	0	17	35	10	0,040	8,65	4,90
	7003 ATBP4	0	0	17	35	10	0,040	8,30	4,75
	7203 CTBP4	2	0	17	40	12	0,060	10,80	5,85
	7203 ATBP4	2	0	17	40	12	0,060	10,40	5,60
20	**71804 CTBP4**	8	0	20	32	7	0,020	3,80	2,65
	71804 ATBP4	8	0	20	32	7	0,020	3,65	2,50
	71904 CTBP4	9	0	20	37	9	0,030	7,35	4,55
	71904 ATBP4	9	0	20	37	9	0,030	6,95	4,40
	7004 CTBP4	0	0	20	42	12	0,070	10,40	6,00
	7004 ATBP4	0	0	20	42	12	0,070	10,00	5,70
	7204 CTBP4	2	0	20	47	14	0,100	14,60	8,15
	7204 ATBP4	2	0	20	47	14	0,100	14,00	7,80

- warehouse - order - phone



Limiting speed [rpm]		Basic makes*			Bearing No.
grease	oil	-	TP4	TAP4	
85000	140000				**706 ATBP4**
95000	160000				**706 CTBP4**
85000	140000				**707 CTBP4**
75000	120000				**707 ATBP4**
75000	120000				**708 CTBP4**
67000	100000				**708 ATBP4**
67000	100000				**709 CTBP4**
60000	90000				**709 ATBP4**
75000	120000				**71800 CTBP4**
70000	110000				**71800 ATBP4**
70000	110000				**71900 CTBP4**
63000	95000				**71900 ATBP4**
60000	90000				**7000 CTBP4**
56000	85000				**7000 ATBP4**
56000	85000				**7200 CTBP4**
50000	75000				**7200 ATBP4**
67000	100000				**71801 CTBP4**
60000	90000				**71801 ATBP4**
60000	90000				**71901 CTBP4**
56000	85000				**71901 ATBP4**
56000	85000				**7001 CTBP4**
50000	75000				**7001 ATBP4**
50000	75000				**7201 CTBP4**
45000	67000				**7201 ATBP4**
56000	85000				**71802 CTBP4**
50000	75000				**71802 ATBP4**
50000	75000				**71902 CTBP4**
48000	70000				**71902 ATBP4**
48000	70000				**7002 CTBP4**
43000	63000				**7002 ATBP4**
45000	67000				**7202 CTBP4**
40000	60000				**7202 ATBP4**
50000	75000				**71803 CTBP4**
48000	70000				**71803 ATBP4**
48000	70000				**71903 CTBP4**
43000	63000				**71903 ATBP4**
43000	63000				**7003 CTBP4**
38000	56000				**7003 ATBP4**
38000	56000				**7203 CTBP4**
36000	53000				**7203 ATBP4**
43000	63000				**71804 CTBP4**
38000	56000				**71804 ATBP4**
38000	56000				**71904 CTBP4**
36000	53000				**71904 ATBP4**
36000	53000				**7004 CTBP4**
32000	48000				**7004 ATBP4**
32000	48000				**7204 CTBP4**
30000	45000				**7204 ATBP4**

* Other products also available

https://nppnovoteh.com

2. ANGULAR CONTACT RADIAL BALL BEARINGS

2.3. Single-row angular-contact high-speed ball bearings



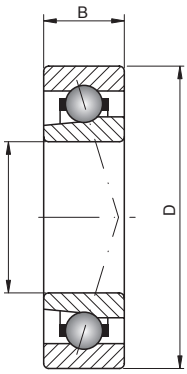

718.. 719.. 70.. 72..

25 – 55 mm

Shaft [mm]	Bearing No.	Series		Dimensions [mm]			Weight [kg]	Basic load ratings [kN]	
		SD	SB	d	D	B		dyn. C	stat. C_0
25	**71805 CTBP4**	8	0	25	37	7	0,020	4,15	3,20
	71805 ATBP4	8	0	25	37	7	0,020	3,90	3,00
	71905 CTBP4	9	0	25	42	9	0,040	8,15	5,70
	71905 ATBP4	9	0	25	42	9	0,040	7,80	5,50
	7005 CTBP4	0	0	25	47	12	0,080	14,60	9,15
	7005 ATBP4	0	0	25	47	12	0,080	13,70	8,65
	7205 CTBP4	2	0	25	52	15	0,120	15,60	9,30
	7205 ATBP4	2	0	25	52	15	0,120	15,00	9,00
30	**71806 CTBP4**	8	0	30	42	7	0,030	4,40	3,65
	71806 ATBP4	8	0	30	42	7	0,030	4,15	3,40
	71906 CTBP4	9	0	30	47	9	0,050	8,65	6,55
	71906 ATBP4	9	0	30	47	9	0,050	8,15	6,30
	7006 CTBP4	0	0	30	55	13	0,110	15,00	10,20
	7006 ATBP4	0	0	30	55	13	0,110	14,30	9,80
	7206 CTBP4	2	0	30	62	16	0,190	23,20	14,60
	7206 ATBP4	2	0	30	62	16	0,190	22,00	14,00
35	**71807 CTBP4**	8	0	35	47	7	0,030	4,65	4,15
	71807 ATBP4	8	0	35	47	7	0,030	4,40	3,80
	71907 CTBP4	9	0	35	55	10	0,070	11,80	9,50
	71907 ATBP4	9	0	35	55	10	0,070	11,00	9,00
	7007 CTBP4	0	0	35	62	14	0,150	19,00	13,70
	7007 ATBP4	0	0	35	62	14	0,150	18,30	12,90
	7207 CTBP4	2	0	35	72	17	0,280	25,50	18,00
	7207 ATBP4	2	0	35	72	17	0,280	24,50	17,00
40	**71808 CTBP4**	8	0	40	52	7	0,030	4,80	4,55
	71808 ATBP4	8	0	40	52	7	0,030	4,55	4,25
	71908 CTBP4	9	0	40	62	12	0,110	17,60	13,70
	71908 ATBP4	9	0	40	62	12	0,110	16,60	13,20
	7008 CTBP4	0	0	40	68	15	0,190	20,40	16,00
	7008 ATBP4	0	0	40	68	15	0,190	19,60	15,00
	7208 CTBP4	2	0	40	80	18	0,370	32,00	22,40
	7208 ATBP4	2	0	40	80	18	0,370	30,50	21,60
45	**71809 CTBP4**	8	0	45	58	7	0,040	7,20	6,95
	71809 ATBP4	8	0	45	58	7	0,040	6,80	6,40
	71909 CTBP4	9	0	45	68	12	0,130	18,60	15,60
	71909 ATBP4	9	0	45	68	12	0,130	17,60	15,00
	7009 CTBP4	0	0	45	75	16	0,230	27,50	21,20
	7009 ATBP4	0	0	45	75	16	0,230	26,50	20,00
	7209 CTBP4	2	0	45	85	19	0,410	33,50	24,50
	7209 ATBP4	2	0	45	85	19	0,410	32,00	23,60
50	**71810 CTBP4**	8	0	50	65	7	0,050	7,35	7,35
	71810 ATBP4	8	0	50	65	7	0,050	6,95	6,80
	71910 CTBP4	9	0	50	72	12	0,130	19,00	16,60
	71910 ATBP4	9	0	50	72	12	0,130	18,00	15,60
	7010 CTBP4	0	0	50	80	16	0,250	28,50	22,80
	7010 ATBP4	0	0	50	80	16	0,250	27,00	21,60
	7210 CTBP4	2	0	50	90	20	0,460	43,00	31,50
	7210 ATBP4	2	0	50	90	20	0,460	40,50	30,50
55	**71811 CTBP4**	8	0	55	72	9	0,080	10,20	10,20
	71811 ATBP4	8	0	55	72	9	0,080	9,65	9,50

- warehouse - order - phone



Limiting speed [rpm]		Basic makes*			Bearing No.
grease	oil	-	TP4	TAP4	
36000	53000	✓	✓	✓	**71805 CTBP4**
32000	48000	✓	✓	✓	**71805 ATBP4**
32000	48000	✓	✓	✓	**71905 CTBP4**
30000	45000	✓	✓	✓	**71905 ATBP4**
30000	45000	✓	✓	✓	**7005 CTBP4**
28000	43000	✓	✓	✓	**7005 ATBP4**
28000	43000	✓	✓	✓	**7205 CTBP4**
26000	40000	✓	✓	✓	**7205 ATBP4**
30000	45000	✓	✓	✓	**71806 CTBP4**
28000	43000	✓	✓	✓	**71806 ATBP4**
28000	43000	✓	✓	✓	**71906 CTBP4**
26000	40000	✓	✓	✓	**71906 ATBP4**
26000	40000	✓	✓	✓	**7006 CTBP4**
24000	38000	✓	✓	✓	**7006 ATBP4**
24000	38000	✓	✓	✓	**7206 CTBP4**
22000	36000	✓	✓	✓	**7206 ATBP4**
26000	40000	✓	✓	✓	**71807 CTBP4**
24000	38000	✓	✓	✓	**71807 ATBP4**
24000	38000	✓	✓	✓	**71907 CTBP4**
22000	36000	✓	✓	✓	**71907 ATBP4**
22000	36000	✓	✓	✓	**7007 CTBP4**
20000	34000	✓	✓	✓	**7007 ATBP4**
20000	34000	✓	✓	✓	**7207 CTBP4**
19000	32000	✓	✓	✓	**7207 ATBP4**
24000	38000	✓	✓	✓	**71808 CTBP4**
22000	36000	✓	✓	✓	**71808 ATBP4**
22000	36000	✓	✓	✓	**71908 CTBP4**
20000	34000	✓	✓	✓	**71908 ATBP4**
20000	34000	✓	✓	✓	**7008 CTBP4**
19000	32000	✓	✓	✓	**7008 ATBP4**
18000	30000	✓	✓	✓	**7208 CTBP4**
17000	28000	✓	✓	✓	**7208 ATBP4**
22000	36000	✓	✓	✓	**71809 CTBP4**
19000	32000	✓	✓	✓	**71809 ATBP4**
19000	32000	✓	✓	✓	**71909 CTBP4**
18000	30000	✓	✓	✓	**71909 ATBP4**
18000	30000	✓	✓	✓	**7009 CTBP4**
17000	28000	✓	✓	✓	**7009 ATBP4**
17000	28000	✓	✓	✓	**7209 CTBP4**
15000	24000	✓	✓	✓	**7209 ATBP4**
19000	32000	✓	✓	✓	**71810 CTBP4**
17000	28000	✓	✓	✓	**71810 ATBP4**
18000	30000	✓	✓	✓	**71910 CTBP4**
16000	26000	✓	✓	✓	**71910 ATBP4**
17000	28000	✓	✓	✓	**7010 CTBP4**
15000	24000	✓	✓	✓	**7010 ATBP4**
16000	26000	✓	✓	✓	**7210 CTBP4**
14000	22000	✓	✓	✓	**7210 ATBP4**
17000	28000	✓	✓	✓	**71811 CTBP4**
16000	26000	✓	✓	✓	**71811 ATBP4**

* Other products also available

https://nppnovoteh.com

2. ANGULAR CONTACT RADIAL BALL BEARINGS

2.3. Single-row angular-contact high-speed ball bearings



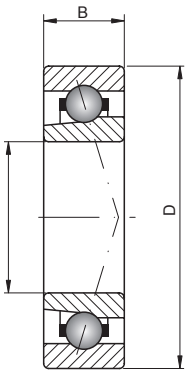

718.. 719.. 70.. 72..

55 – 85 mm

Shaft [mm]	Bearing No.	Series		Dimensions [mm]			Weight [kg]	Basic load ratings [kN]	
		SD	SB	d	D	B		dyn. C	stat. C_0
55 cont.	**71911 CTBP4**	9	0	55	80	13	0,180	22,80	20,40
	71911 ATBP4	9	0	55	80	13	0,180	21,60	19,30
	7011 CTBP4	0	0	55	90	18	0,370	38,00	31,00
	7011 ATBP4	0	0	55	90	18	0,370	36,00	29,00
	7211 CTBP4	2	0	55	100	21	0,610	46,50	37,50
	7211 ATBP4	2	0	55	100	21	0,610	44,00	35,50
60	**71812 CTBP4**	8	0	60	78	10	0,100	13,20	13,20
	71812 ATBP4	8	0	60	78	10	0,100	12,20	12,20
	71912 CTBP4	9	0	60	85	13	0,190	24,00	22,80
	71912 ATBP4	9	0	60	85	13	0,190	22,80	21,60
	7012 CTBP4	0	0	60	95	18	0,400	39,00	33,50
	7012 ATBP4	0	0	60	95	18	0,400	36,50	31,50
	7212 CTBP4	2	0	60	110	22	0,800	55,00	44,00
	7212 ATBP4	2	0	60	110	22	0,800	52,00	42,50
65	**71813 CTBP4**	8	0	65	85	10	0,130	13,40	14,00
	71813 ATBP4	8	0	65	85	10	0,130	12,70	12,90
	71913 CTBP4	9	0	65	90	13	0,200	24,50	24,00
	71913 ATBP4	9	0	65	90	13	0,200	22,80	22,40
	7013 CTBP4	0	0	65	100	18	0,420	40,00	35,50
	7013 ATBP4	0	0	65	100	18	0,420	38,00	33,50
	7213 CTBP4	2	0	65	120	23	1,020	57,00	48,00
	7213 ATBP4	2	0	65	120	23	1,020	54,00	45,50
70	**71814 CTBP4**	8	0	70	90	10	0,140	14,00	15,00
	71814 ATBP4	8	0	70	90	10	0,140	12,90	13,70
	71914 CTBP4	9	0	70	100	16	0,330	33,50	32,50
	71914 ATBP4	9	0	70	100	16	0,330	31,50	31,00
	7014 CTBP4	0	0	70	110	20	0,590	50,00	43,00
	7014 ATBP4	0	0	70	110	20	0,590	46,50	41,50
	7214 CTBP4	2	0	70	125	24	1,120	69,50	58,50
	7214 ATBP4	2	0	70	125	24	1,120	65,50	56,00
75	**71815 CTBP4**	8	0	75	95	10	0,140	14,30	15,60
	71815 ATBP4	8	0	75	95	10	0,140	13,40	14,60
	71915 CTBP4	9	0	75	105	16	0,350	34,00	34,50
	71915 ATBP4	9	0	75	105	16	0,350	32,00	32,50
	7015 CTBP4	0	0	75	115	20	0,620	51,00	46,50
	7015 ATBP4	0	0	75	115	20	0,620	48,00	44,00
	7215 CTBP4	2	0	75	130	25	1,210	72,00	63,00
	7215 ATBP4	2	0	75	130	25	1,210	68,00	60,00
80	**71816 CTBP4**	8	0	80	100	10	0,150	14,60	16,60
	71816 ATBP4	8	0	80	100	10	0,150	13,70	15,60
	71916 CTBP4	9	0	80	110	16	0,370	34,50	36,00
	71916 ATBP4	9	0	80	110	16	0,370	32,50	34,00
	7016 CTBP4	0	0	80	125	22	0,840	63,00	58,50
	7016 ATBP4	0	0	80	125	22	0,840	60,00	55,00
	7216 CTBP4	2	0	80	140	26	1,470	93,00	78,00
	7216 ATBP4	2	0	80	140	26	1,470	88,00	73,50
85	**71817 CTBP4**	8	0	85	110	13	0,270	21,60	24,00
	71817 ATBP4	8	0	85	110	13	0,270	20,40	22,40
	71917 CTBP4	9	0	85	120	18	0,530	45,00	46,50
	71917 ATBP4	9	0	85	120	18	0,530	42,50	44,00

- warehouse - order - phone



Limiting speed [rpm]		Basic makes*			Bearing No.
grease	oil	-	TP4	TAP4	
16000	26000	✓	✓	✓	**71911 CTBP4**
15000	24000	✓	✓	✓	**71911 ATBP4**
15000	24000	✓	✓	✓	**7011 CTBP4**
14000	22000	✓	✓	✓	**7011 ATBP4**
14000	22000	✓	✓	✓	**7211 CTBP4**
13000	20000	✓	✓	✓	**7211 ATBP4**
16000	26000	✓	✓	✓	**71812 CTBP4**
14000	22000	✓	✓	✓	**71812 ATBP4**
15000	24000	✓	✓	✓	**71912 CTBP4**
14000	22000	✓	✓	✓	**71912 ATBP4**
14000	22000	✓	✓	✓	**7012 CTBP4**
13000	20000	✓	✓	✓	**7012 ATBP4**
13000	20000	✓	✓	✓	**7212 CTBP4**
12000	19000	✓	✓	✓	**7212 ATBP4**
15000	24000	✓	✓	✓	**71813 CTBP4**
13000	20000	✓	✓	✓	**71813 ATBP4**
14000	22000	✓	✓	✓	**71913 CTBP4**
13000	20000	✓	✓	✓	**71913 ATBP4**
13000	20000	✓	✓	✓	**7013 CTBP4**
12000	19000	✓	✓	✓	**7013 ATBP4**
12000	19000	✓	✓	✓	**7213 CTBP4**
11000	18000	✓	✓	✓	**7213 ATBP4**
14000	22000	✓	✓	✓	**71814 CTBP4**
13000	20000	✓	✓	✓	**71814 ATBP4**
13000	20000	✓	✓	✓	**71914 CTBP4**
12000	19000	✓	✓	✓	**71914 ATBP4**
12000	19000	✓	✓	✓	**7014 CTBP4**
11000	18000	✓	✓	✓	**7014 ATBP4**
11000	18000	✓	✓	✓	**7214 CTBP4**
10000	17000	✓	✓	✓	**7214 ATBP4**
13000	20000	✓	✓	✓	**71815 CTBP4**
12000	19000	✓	✓	✓	**71815 ATBP4**
12000	19000	✓	✓	✓	**71915 CTBP4**
11000	18000	✓	✓	✓	**71915 ATBP4**
12000	19000	✓	✓	✓	**7015 CTBP4**
11000	18000	✓	✓	✓	**7015 ATBP4**
11000	18000	✓	✓	✓	**7215 CTBP4**
9500	16000	✓	✓	✓	**7215 ATBP4**
12000	19000	✓	✓	✓	**71816 CTBP4**
11000	18000	✓	✓	✓	**71816 ATBP4**
12000	19000	✓	✓	✓	**71916 CTBP4**
11000	18000	✓	✓	✓	**71916 ATBP4**
11000	18000	✓	✓	✓	**7016 CTBP4**
9500	16000	✓	✓	✓	**7016 ATBP4**
10000	17000	✓	✓	✓	**7216 CTBP4**
9000	15000	✓	✓	✓	**7216 ATBP4**
11000	18000	✓	✓	✓	**71817 CTBP4**
10000	17000	✓	✓	✓	**71817 ATBP4**
11000	18000	✓	✓	✓	**71917 CTBP4**
9500	16000	✓	✓	✓	**71917 ATBP4**

* Other products also available

https://nppnovoteh.com

2. ANGULAR CONTACT RADIAL BALL BEARINGS

2.3. Single-row angular-contact high-speed ball bearings



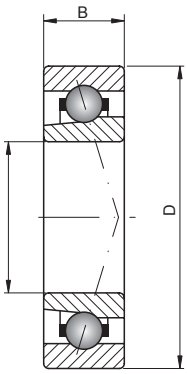

718.. 719.. 70.. 72..

85 – 120 mm

Shaft [mm]	Bearing No.	Series		Dimensions [mm]			Weight [kg]	Basic load ratings [kN]	
		SD	SB	d	D	B		dyn. C	stat. C_0
85 cont.	**7017 CTBP4**	0	0	85	130	22	0,890	65,50	62,00
	7017 ATBP4	0	0	85	130	22	0,890	62,00	58,50
	7217 CTBP4	2	0	85	150	28	1,850	96,50	85,00
	7217 ATBP4	2	0	85	150	28	1,850	91,50	80,00
90	**71818 CTBP4**	8	0	90	115	13	0,280	21,20	23,60
	71818 ATBP4	8	0	90	115	13	0,280	20,00	22,00
	71918 CTBP4	9	0	90	125	18	0,550	45,50	49,00
	71918 ATBP4	9	0	90	125	18	0,550	43,00	46,50
	7018 CTBP4	0	0	90	140	24	1,150	76,50	72,00
	7018 ATBP4	0	0	90	140	24	1,150	72,00	68,00
	7218 CTBP4	2	0	90	160	30	2,260	122,00	104,00
	7218 ATBP4	2	0	90	160	30	2,260	116,00	100,00
95	**71819 CTBP4**	8	0	95	120	13	0,290	21,60	24,50
	71819 ATBP4	8	0	95	120	13	0,290	20,40	22,80
	71919 CTBP4	9	0	95	130	18	0,580	46,50	51,00
	71919 ATBP4	9	0	95	130	18	0,580	44,00	48,00
	7019 CTBP4	0	0	95	145	24	1,200	78,00	76,50
	7019 ATBP4	0	0	95	145	24	1,200	75,00	72,00
	7219 CTBP4	2	0	95	170	32	2,780	127,00	114,00
	7219 ATBP4	2	0	95	170	32	2,780	122,00	108,00
100	**71820 CTBP4**	8	0	100	125	13	0,300	21,60	25,00
	71820 ATBP4	8	0	100	125	13	0,300	20,40	23,60
	71920 CTBP4	9	0	100	140	20	0,790	58,50	64,00
	71920 ATBP4	9	0	100	140	20	0,790	55,00	60,00
	7020 CTBP4	0	0	100	150	24	1,260	81,50	81,50
	7020 ATBP4	0	0	100	150	24	1,260	76,50	76,50
	7220 CTBP4	2	0	100	180	34	3,320	132,00	122,00
	7220 ATBP4	2	0	100	180	34	3,320	125,00	116,00
105	**71821 CTBP4**	8	0	105	130	13	0,300	22,80	27,50
	71821 ATBP4	8	0	105	130	13	0,300	21,60	25,50
	71921 CTBP4	9	0	105	145	20	0,800	58,50	64,00
	71921 ATBP4	9	0	105	145	20	0,800	55,00	60,00
	7021 CTBP4	0	0	105	160	26	1,600	106,00	102,00
	7021 ATBP4	0	0	105	160	26	1,600	102,00	98,00
	7221 CTBP4	2	0	105	190	36	4,000	163,00	146,00
	7221 ATBP4	2	0	105	190	36	4,000	156,00	140,00
110	**71822 CTBP4**	8	0	110	140	16	0,500	31,50	36,50
	71822 ATBP4	8	0	110	140	16	0,500	29,00	34,00
	71922 CTBP4	9	0	110	150	20	0,800	58,50	67,00
	71922 ATBP4	9	0	110	150	20	0,800	56,00	63,00
	7022 CTBP4	0	0	110	170	28	2,000	110,00	110,00
	7022 ATBP4	0	0	110	170	28	2,000	104,00	104,00
	7222 CTBP4	2	0	110	200	38	4,700	163,00	150,00
	7222 ATBP4	2	0	110	200	38	4,700	153,00	143,00
120	**71824 CTBP4**	8	0	120	150	16	0,500	32,00	39,00
	71824 ATBP4	8	0	120	150	16	0,500	30,00	36,00
	71924 CTBP4	9	0	120	165	22	1,200	73,50	85,00
	71924 ATBP4	9	0	120	165	22	1,200	69,50	80,00
	7024 CTBP4	0	0	120	180	28	2,100	112,00	116,00
	7024 ATBP4	0	0	120	180	28	2,100	106,00	110,00

- warehouse - order - phone



Limiting speed [rpm]		Basic makes*			Bearing No.
grease	oil	-	TP4	TAP4	
10000	17000	✓	✓	✓	**7017 CTBP4**
9000	15000	✓	✓	✓	**7017 ATBP4**
9000	15000	✓	✓	✓	**7217 CTBP4**
8000	13000	✓	✓	✓	**7217 ATBP4**
11000	18000	✓	✓	✓	**71818 CTBP4**
9500	16000	✓	✓	✓	**71818 ATBP4**
10000	17000	✓	✓	✓	**71918 CTBP4**
9000	15000	✓	✓	✓	**71918 ATBP4**
9500	16000	✓	✓	✓	**7018 CTBP4**
8500	14000	✓	✓	✓	**7018 ATBP4**
8500	14000	✓	✓	✓	**7218 CTBP4**
7500	12000	✓	✓	✓	**7218 ATBP4**
10000	17000	✓	✓	✓	**71819 CTBP4**
9000	15000	✓	✓	✓	**71819 ATBP4**
9500	16000	✓	✓	✓	**71919 CTBP4**
8500	14000	✓	✓	✓	**71919 ATBP4**
9000	15000	✓	✓	✓	**7019 CTBP4**
8000	13000	✓	✓	✓	**7019 ATBP4**
8000	13000	✓	✓	✓	**7219 CTBP4**
7000	11000	✓	✓	✓	**7219 ATBP4**
9500	16000	✓	✓	✓	**71820 CTBP4**
8500	14000	✓	✓	✓	**71820 ATBP4**
9000	15000	✓	✓	✓	**71920 CTBP4**
8000	13000	✓	✓	✓	**71920 ATBP4**
8500	14000	✓	✓	✓	**7020 CTBP4**
7500	12000	✓	✓	✓	**7020 ATBP4**
7500	12000	✓	✓	✓	**7220 CTBP4**
6700	10000	✓	✓	✓	**7220 ATBP4**
9000	15000	✓	✓	✓	**71821 CTBP4**
8000	13000	✓	✓	✓	**71821 ATBP4**
8500	14000	✓	✓	✓	**71921 CTBP4**
7500	12000	✓	✓	✓	**71921 ATBP4**
8000	13000	✓	✓	✓	**7021 CTBP4**
7000	11000	✓	✓	✓	**7021 ATBP4**
7000	11000	✓	✓	✓	**7221 CTBP4**
6300	9500	✓	✓	✓	**7221 ATBP4**
8500	14000	✓	✓	✓	**71822 CTBP4**
7500	12000	✓	✓	✓	**71822 ATBP4**
8000	13000	✓	✓	✓	**71922 CTBP4**
7500	12000	✓	✓	✓	**71922 ATBP4**
7500	12000	✓	✓	✓	**7022 CTBP4**
6700	10000	✓	✓	✓	**7022 ATBP4**
6700	10000	✓	✓	✓	**7222 CTBP4**
6000	9000	✓	✓	✓	**7222 ATBP4**
7500	12000	✓	✓	✓	**71824 CTBP4**
7000	11000	✓	✓	✓	**71824 ATBP4**
7000	11000	✓	✓	✓	**71924 CTBP4**
6700	10000	✓	✓	✓	**71924 ATBP4**
6700	10000	✓	✓	✓	**7024 CTBP4**
6300	9500	✓	✓	✓	**7024 ATBP4**

* Other products also available

https://nppnovoteh.com

2. ANGULAR CONTACT RADIAL BALL BEARINGS

2.3. Single-row angular-contact high-speed ball bearings



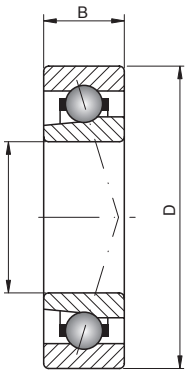

718.. 719.. 70.. 72..

120 – 180 mm

Shaft [mm]	Bearing No.	Series		Dimensions [mm]			Weight [kg]	Basic load ratings [kN]	
		SD	SB	d	D	B		dyn. C	stat. C_0
120 cont.	**7224 CTBP4**	2	0	120	215	40	5,500	204,00	196,00
	7224 ATBP4	2	0	120	215	40	5,500	196,00	186,00
130	**71826 CTBP4**	8	0	130	165	18	0,800	42,50	51,00
	71826 ATBP4	8	0	130	165	18	0,800	40,00	48,00
	71926 CTBP4	9	0	130	180	24	1,500	86,50	100,00
	71926 ATBP4	9	0	130	180	24	1,500	81,50	95,00
	7026 CTBP4	0	0	130	200	33	3,200	143,00	150,00
	7026 ATBP4	0	0	130	200	33	3,200	137,00	143,00
	7226 CTBP4	2	0	130	230	40	6,300	212,00	216,00
	7226 ATBP4	2	0	130	230	40	6,300	204,00	204,00
140	**71828 CTBP4**	8	0	140	175	18	0,800	43,00	54,00
	71828 ATBP4	8	0	140	175	18	0,800	40,50	51,00
	71928 CTBP4	9	0	140	190	24	1,600	90,00	108,00
	71928 ATBP4	9	0	140	190	24	1,600	85,00	102,00
	7028 CTBP4	0	0	140	210	33	3,400	146,00	160,00
	7028 ATBP4	0	0	140	210	33	3,400	140,00	150,00
	7228 CTBP4	2	0	140	250	42	8,100	220,00	232,00
	7228 ATBP4	2	0	140	250	42	8,100	212,00	224,00
150	**71830 CTBP4**	8	0	150	190	20	1,100	56,00	69,50
	71830 ATBP4	8	0	150	190	20	1,100	52,00	64,00
	71930 CTBP4	9	0	150	210	28	2,500	122,00	143,00
	71930 ATBP4	9	0	150	210	28	2,500	114,00	134,00
	7030 CTBP4	0	0	150	225	35	4,100	183,00	193,00
	7030 ATBP4	0	0	150	225	35	4,100	173,00	186,00
	7230 CTBP4	2	0	150	270	45	10,300	228,00	255,00
	7230 ATBP4	2	0	150	270	45	10,300	216,00	240,00
160	**71832 CTBP4**	8	0	160	200	20	1,200	57,00	73,50
	71832 ATBP4	8	0	160	200	20	1,200	54,00	68,00
	71932 CTBP4	9	0	160	220	28	2,700	125,00	150,00
	71932 ATBP4	9	0	160	220	28	2,700	116,00	140,00
	7032 CTBP4	0	0	160	240	38	5,100	190,00	208,00
	7032 ATBP4	0	0	160	240	38	5,100	176,00	196,00
	7232 CTBP4	2	0	160	290	48	13,000	245,00	285,00
	7232 ATBP4	2	0	160	290	48	13,000	232,00	270,00
170	**71834 CTBP4**	8	0	170	215	22	1,600	68,00	88,00
	71834 ATBP4	8	0	170	215	22	1,600	64,00	81,50
	71934 CTBP4	9	0	170	230	28	2,800	129,00	163,00
	71934 ATBP4	9	0	170	230	28	2,800	122,00	150,00
	7034 CTBP4	0	0	170	260	42	6,700	236,00	270,00
	7034 ATBP4	0	0	170	260	42	6,700	224,00	255,00
	7234 CTBP4	2	0	170	310	52	16,000	300,00	360,00
	7234 ATBP4	2	0	170	310	52	16,000	280,00	345,00
180	**71836 CTBP4**	8	0	180	225	22	1,700	71,00	93,00
	71836 ATBP4	8	0	180	225	22	1,700	67,00	86,50
	71936 CTBP4	9	0	180	250	33	4,200	163,00	204,00
	71936 ATBP4	9	0	180	250	33	4,200	156,00	193,00
	7036 CTBP4	0	0	180	280	46	8,900	245,00	285,00
	7036 ATBP4	0	0	180	280	46	8,900	232,00	275,00
	7236 CTBP4	2	0	180	320	52	16,800	305,00	390,00
	7236 ATBP4	2	0	180	320	52	16,800	290,00	365,00

- warehouse - order - phone



Limiting speed [rpm]		Basic makes*			Bearing No.
grease	oil	-	TP4	TAP4	
6000	9000				**7224 CTBP4**
5300	8000				**7224 ATBP4**
7000	11000				**71826 CTBP4**
6300	9500				**71826 ATBP4**
6700	10000				**71926 CTBP4**
6000	9000				**71926 ATBP4**
6000	9000				**7026 CTBP4**
5600	8500				**7026 ATBP4**
5600	8500				**7226 CTBP4**
5000	7500				**7226 ATBP4**
6300	9500				**71828 CTBP4**
6000	9000				**71828 ATBP4**
6000	9000				**71928 CTBP4**
5600	8500				**71928 ATBP4**
5600	8500				**7028 CTBP4**
5000	7500				**7028 ATBP4**
5000	7500				**7228 CTBP4**
4500	6700				**7228 ATBP4**
6000	9000				**71830 CTBP4**
5300	8000				**71830 ATBP4**
5600	8500				**71930 CTBP4**
5000	7500				**71930 ATBP4**
5300	8000				**7030 CTBP4**
4800	7000				**7030 ATBP4**
4500	6700				**7230 CTBP4**
4000	6000				**7230 ATBP4**
5600	8500				**71832 CTBP4**
5000	7500				**71832 ATBP4**
5000	7500				**71932 CTBP4**
4800	7000				**71932 ATBP4**
4800	7000				**7032 CTBP4**
4300	6300				**7032 ATBP4**
4300	6300				**7232 CTBP4**
3800	5600				**7232 ATBP4**
5000	7500				**71834 CTBP4**
4500	6700				**71834 ATBP4**
4800	7000				**71934 CTBP4**
4500	6700				**71934 ATBP4**
4500	6700				**7034 CTBP4**
4000	6000				**7034 ATBP4**
4000	6000				**7234 CTBP4**
3600	5300				**7234 ATBP4**
4800	7000				**71836 CTBP4**
4300	6300				**71836 ATBP4**
4500	6700				**71936 CTBP4**
4000	6000				**71936 ATBP4**
4000	6000				**7036 CTBP4**
3800	5600				**7036 ATBP4**
3800	5600				**7236 CTBP4**
3400	5000				**7236 ATBP4**

* Other products also available

https://nppnovoteh.com

2. ANGULAR CONTACT RADIAL BALL BEARINGS

2.3. Single-row angular-contact high-speed ball bearings



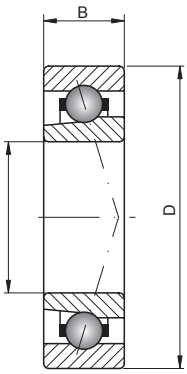

718.. 719.. 70.. 72..

190 – 360 mm

Shaft [mm]	Bearing No.	Series		Dimensions [mm]			Weight [kg]	Basic load ratings [kN]	
		SD	SB	d	D	B		dyn. C	stat. C_0
190	**71838 CTBP4**	8	0	190	240	24	2,200	80,00	108,00
	71838 ATBP4	8	0	190	240	24	2,200	75,00	100,00
	71938 CTBP4	9	0	190	260	33	4,400	166,00	212,00
	71938 ATBP4	9	0	190	260	33	4,400	156,00	200,00
	7038 CTBP4	0	0	190	290	46	9,300	250,00	305,00
	7038 ATBP4	0	0	190	290	46	9,300	236,00	290,00
	7238 CTBP4	2	0	190	340	55	20,300	315,00	415,00
	7238 ATBP4	2	0	190	340	55	20,300	300,00	390,00
200	**71840 CTBP4**	8	0	200	250	24	2,300	81,50	114,00
	71840 ATBP4	8	0	200	250	24	2,300	76,50	106,00
	71940 CTBP4	9	0	200	280	38	6,100	204,00	255,00
	71940 ATBP4	9	0	200	280	38	6,100	193,00	240,00
	7040 CTBP4	0	0	200	310	51	12,000	305,00	390,00
	7040 ATBP4	0	0	200	310	51	12,000	290,00	365,00
	7240 CTBP4	2	0	200	360	58	24,400	325,00	440,00
	7240 ATBP4	2	0	200	360	58	24,400	310,00	415,00
220	**71844 CTBP4**	8	0	220	270	24	2,500	83,00	118,00
	71844 ATBP4	8	0	220	270	24	2,500	78,00	110,00
	71944 CTBP4	9	0	220	300	38	6,700	216,00	285,00
	71944 ATBP4	9	0	220	300	38	6,700	204,00	270,00
	7044 CTBP4	0	0	220	340	56	16,000	325,00	440,00
	7044 ATBP4	0	0	220	340	56	16,000	310,00	415,00
	7244 CTBP4	2	0	220	400	65	33,600	400,00	560,00
	7244 ATBP4	2	0	220	400	65	33,600	380,00	540,00
240	**71848 CTBP4**	8	0	240	300	28	3,900	106,00	150,00
	71848 ATBP4	8	0	240	300	28	3,900	98,00	140,00
	71948 CTBP4	9	0	240	320	38	7,200	224,00	310,00
	71948 ATBP4	9	0	240	320	38	7,200	212,00	285,00
	7048 CTBP4	0	0	240	360	56	17,000	335,00	465,00
	7048 ATBP4	0	0	240	360	56	17,000	315,00	440,00
260	**71952 CTBP4**	9	0	260	360	46	12,100	285,00	415,00
	71952 ATBP4	9	0	260	360	46	12,100	270,00	390,00
	71956 CTBP4	9	0	280	380	46	12,900	300,00	450,00
	71956 ATBP4	9	0	280	380	46	12,900	280,00	425,00
300	**71960 CTBP4**	9	0	300	420	56	20,400	360,00	570,00
	71960 ATBP4	9	0	300	420	56	20,400	340,00	540,00
320	**71964 CTBP4**	9	0	320	440	56	21,600	375,00	620,00
	71964 ATBP4	9	0	320	440	56	21,600	355,00	585,00
340	**71968 CTBP4**	9	0	340	460	56	22,700	380,00	640,00
	71968 ATBP4	9	0	340	460	56	22,700	360,00	610,00
360	**71972 CTBP4**	9	0	360	480	56	23,900	390,00	695,00
	71972 ATBP4	9	0	360	480	56	23,900	375,00	640,00

- warehouse - order - phone



Limiting speed [rpm]		Basic makes*			Bearing No.
grease	oil	-	TP4	TAP4	
4500	6700				**71838 CTBP4**
4000	6000				**71838 ATBP4**
4300	6300				**71938 CTBP4**
3800	5600				**71938 ATBP4**
3800	5600				**7038 CTBP4**
3600	5300				**7038 ATBP4**
3400	5000				**7238 CTBP4**
3200	4800				**7238 ATBP4**
4300	6300				**71840 CTBP4**
3800	5600				**71840 ATBP4**
4000	6000				**71940 CTBP4**
3600	5300				**71940 ATBP4**
3600	5300				**7040 CTBP4**
3200	4800				**7040 ATBP4**
3200	4800				**7240 CTBP4**
3000	4500				**7240 ATBP4**
3800	5600				**71844 CTBP4**
3400	5000				**71844 ATBP4**
3600	5300				**71944 CTBP4**
3200	4800				**71944 ATBP4**
3200	4800				**7044 CTBP4**
3000	4500				**7044 ATBP4**
2800	4300				**7244 CTBP4**
2600	4000				**7244 ATBP4**
3400	5000				**71848 CTBP4**
3000	4500				**71848 ATBP4**
3200	4800				**71948 CTBP4**
3000	4500				**71948 ATBP4**
3000	4500				**7048 CTBP4**
2800	4300				**7048 ATBP4**
3000	4500				**71952 CTBP4**
2600	4000				**71952 ATBP4**
2600	4000				**71956 CTBP4**
2400	3800				**71956 ATBP4**
2400	3800				**71960 CTBP4**
2200	3600				**71960 ATBP4**
2200	3600				**71964 CTBP4**
2000	3400				**71964 ATBP4**
2200	3600				**71968 CTBP4**
1900	3200				**71968 ATBP4**
2000	3400				**71972 CTBP4**
1800	3000				**71972 ATBP4**

* Other products also available

https://nppnovoteh.com

2. ANGULAR CONTACT RADIAL BALL BEARINGS

2.4. Double-row angular-contact ball bearings



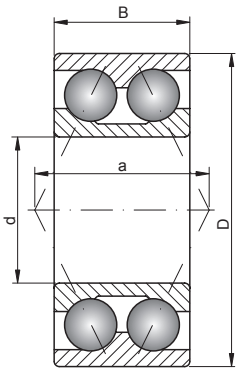

38.. 39.. 30.. 32.. 33..

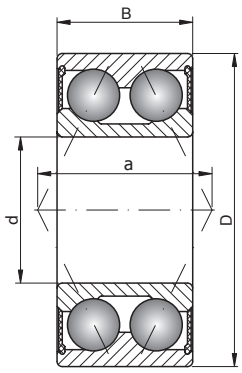

2RS

5 – 20 mm

Shaft [mm]	Bearing No.	Series		Dimensions [mm]				Weight [kg]	Basic load ratings [kN]	
		SD	SB	d	D	B	a		dyn. C	stat. C_0
5	**30/5 ZZ**	0	3	5	14	7,0	6,30	0,008	1,81	0,95
	30/5 2RS	0	3	5	14	7,0	6,30	0,008	1,81	0,95
6	**30/6 ZZ**	0	3	6	17	9,0	8,80	0,01	3,1	1,4
	30/6 2RS	0	3	6	17	9,0	8,80	0,01	3,1	1,4
7	**30/7 ZZ**	0	3	7	19	10,0	10,00	0,012	3,65	1,7
	30/7 2RS	0	3	7	19	10,0	10,00	0,012	3,65	1,7
8	**30/8 ZZ**	0	3	8	22	11,0	10,70	0,02	5,2	2,61
	30/8 2RS	0	3	8	22	11,0	10,70	0,02	5,2	2,61
10	**3800 ZZ**	8	3	10	19	7,0	8,10	0,008	2,1	1,4
	3800 2RS	8	3	10	19	7,0	8,10	0,008	2,1	1,4
	3000 ZZ	0	3	10	26	12,0	12,30	0,022	5,7	3,25
	3000 2RS	0	3	10	26	12,0	12,30	0,022	5,7	3,25
	3200 ZZ	2	3	10	30	14,0	13,30	0,051	7,41	4,3
	3200 2RS	2	3	10	30	14,0	13,30	0,051	7,41	4,3
	3200	2	3	10	30	14,0	13,30	0,051	7,41	4,3
12	**3801 ZZ**	8	3	12	21	7,0	8,90	0,008	2,19	1,55
	3801 2RS	8	3	12	21	7,0	8,90	0,008	2,19	1,55
	3001 ZZ	0	3	12	28	12,0	13,00	0,025	6,2	3,75
	3001 2RS	0	3	12	28	12,0	13,00	0,025	6,2	3,75
	3201 ZZ	2	3	12	32	15,9	15,30	0,058	10,1	5,6
	3201 2RS	2	3	12	32	15,9	15,30	0,058	10,1	5,6
	3201	2	3	12	32	15,9	15,30	0,058	10,1	5,6
15	**3802 ZZ**	8	3	15	24	7,0	10,10	0,009	2,43	1,96
	3802 2RS	8	3	15	24	7,0	10,10	0,009	2,43	1,96
	3002 ZZ	0	3	15	32	13,0	14,80	0,036	8,6	5,4
	3002 2RS	0	3	15	32	13,0	14,80	0,036	8,6	5,4
	3202 ZZ	2	3	15	35	15,9	16,50	0,066	11,2	6,8
	3202 2RS	2	3	15	35	15,9	16,50	0,066	11,2	6,8
	3202	2	3	15	35	15,9	16,50	0,066	11,2	6,8
	3302 ZZ	3	3	15	42	19,0	20,00	0,13	15,1	9,15
	3302 2RS	3	3	15	42	19,0	20,00	0,13	15,1	9,15
	3302	3	3	15	42	19,0	20,00	0,13	15,1	9,15
17	**3803 ZZ**	8	3	17	26	7,0	10,90	0,015	2,48	2,08
	3803 2RS	8	3	17	26	7,0	10,90	0,015	2,48	2,08
	3903 ZZ	9	3	17	30	10,0	14,90	0,03	5,2	4,1
	3903 2RS	9	3	17	30	10,0	14,90	0,03	5,2	4,1
	3003 ZZ	0	3	17	35	14,0	15,50	0,042	9,2	6,2
	3003 2RS	0	3	17	35	14,0	15,50	0,042	9,2	6,2
	3203 ZZ	2	3	17	40	17,5	18,80	0,096	14	8,65
	3203 2RS	2	3	17	40	17,5	18,80	0,096	14	8,65
	3203	2	3	17	40	17,5	18,80	0,096	14	8,65
	3303 ZZ	3	3	17	47	22,2	22,50	0,18	21,2	12,5
	3303 2RS	3	3	17	47	22,2	22,50	0,18	21,2	12,5
	3303	3	3	17	47	22,2	22,50	0,18	21,2	12,5
20	**3804 ZZ**	8	3	20	32	10,0	14,30	0,02	5,6	4,85
	3804 2RS	8	3	20	32	10	14,30	0,02	5,6	4,8
	3904 ZZ	9	3	20	37	13,0	18,80	0,047	9,1	6,9
	3904 2RS	9	3	20	37	13,0	18,80	0,047	9,1	6,9

- warehouse - order - phone

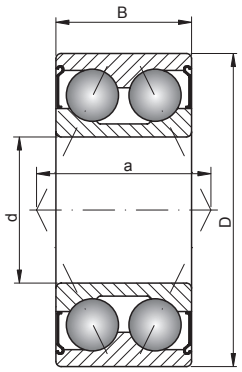

ZZ

Limiting speed [rpm]		Basic makes*		Bearing No.
grease	oil	-	TN	
23500	30600			**30/5 ZZ**
23500	-			**30/5 2RS**
22500	29200			**30/6 ZZ**
22500	-			**30/6 2RS**
21000	27300			**30/7 ZZ**
21000	-			**30/7 2RS**
20000	26000			**30/8 ZZ**
20000	-			**30/8 2RS**
22500	29200			**3800 ZZ**
22500	-			**3800 2RS**
18500	24000			**3000 ZZ**
18500	-			**3000 2RS**
16000	22000			**3200 ZZ**
16000	-			**3200 2RS**
16000	22000			**3200**
20000	26000			**3801 ZZ**
20000	-			**3801 2RS**
17500	22800			**3001 ZZ**
17500	-			**3001 2RS**
15000	20000			**3201 ZZ**
15000	-			**3201 2RS**
15000	20000			**3201**
17500	22800			**3802 ZZ**
17500	-			**3802 2RS**
14500	18800			**3002 ZZ**
14500	-			**3002 2RS**
12000	17000			**3202 ZZ**
12000	-			**3202 2RS**
12000	17000			**3202**
10000	15000			**3302 ZZ**
10000	-			**3302 2RS**
10000	15000			**3302**
15000	19500			**3803 ZZ**
15000	-			**3803 2RS**
14000	18000			**3903 ZZ**
14000	-			**3903 2RS**
12500	16200			**3003 ZZ**
12500	-			**3003 2RS**
10000	15000			**3203 ZZ**
10000	-			**3203 2RS**
10000	15000			**3203**
9500	14000			**3303 ZZ**
9500	-			**3303 2RS**
9500	14000			**3303**
13000	16900			**3804 ZZ**
13000	-			**3804 2RS**
12500	16200			**3904 ZZ**
12500	-			**3904 2RS**

* Other products also available

https://nppnovoteh.com

2. ANGULAR CONTACT RADIAL BALL BEARINGS

2.4. Double-row angular-contact ball bearings



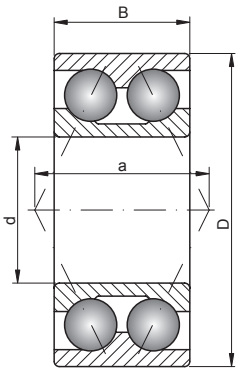

38.. 39.. 30.. 32.. 33..

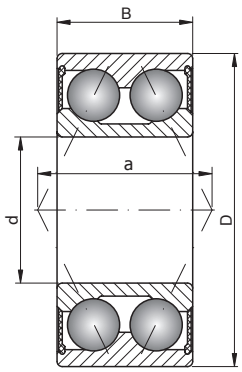

2RS

20 – 45 mm

Shaft [mm]	Bearing No.	Series		Dimensions [mm]				Weight [kg]	Basic load ratings [kN]	
		SD	SB	d	D	B	a		dyn. C	stat. C_0
20 cont.	**3004 ZZ**	0	3	20	42	16,0	19,10	0,08	14,5	9,6
	3004 2RS	0	3	20	42	16,0	19,10	0,08	14,5	9,6
	3204 ZZ	2	3	20	47	20,6	22,00	0,16	18,6	12
	3204 2RS	2	3	20	47	20,6	22,00	0,16	18,6	12
	3204	2	3	20	47	20,6	22,00	0,16	18,6	12
	3304 ZZ	3	3	20	52	22,2	26,50	0,22	22,1	14,3
	3304 2RS	3	3	20	52	22,2	26,50	0,22	22,1	14,3
	3304	3	3	20	52	22,2	26,50	0,22	22,1	14,3
25	**3805 ZZ**	8	3	25	37	10,0	15,90	0,025	6	5,6
	3805 2RS	8	3	25	37	10,0	15,90	0,025	6	5,6
	3005 ZZ	0	3	25	47	16,0	21,20	0,1	15,5	11,1
	3005 2RS	0	3	25	47	16,0	21,20	0,1	15,5	11,1
	3205 ZZ	2	3	25	52	20,6	24,00	0,18	20,3	14
	3205 2RS	2	3	25	52	20,6	24,00	0,18	20,3	14
	3205	2	3	25	52	20,6	24,00	0,18	20,3	14
	3305 ZZ	3	3	25	62	25,4	31,00	0,35	31,2	20,8
	3305 2RS	3	3	25	62	25,4	31,00	0,35	31,2	20,8
	3305	3	3	25	62	25,4	31,00	0,35	31,2	20,8
30	**3806 ZZ**	8	3	30	42	10,0	18,10	0,03	6,3	6,1
	3806 2RS	8	3	30	42	10,0	18,10	0,03	6,3	6,1
	3006 ZZ	0	3	30	55	19,0	24,80	0,16	20,3	15,6
	3006 2RS	0	3	30	55	19,0	24,80	0,16	20,3	15,6
	3206 ZZ	2	3	30	62	23,8	28,90	0,29	28,1	20
	3206 2RS	2	3	30	62	23,8	28,90	0,29	28,1	20
	3206	2	3	30	62	23,8	28,90	0,29	28,1	20
	3306 ZZ	3	3	30	72	30,2	37,50	0,53	41	28,5
	3306 2RS	3	3	30	72	30,2	37,50	0,53	41	28,5
	3306	3	3	30	72	30,2	37,50	0,53	41	28,5
35	**3807 ZZ**	8	3	35	47	10,0	20,00	0,035	6,7	7
	3807 2RS	8	3	35	47	10,0	20,00	0,035	6,7	7
	3007 ZZ	0	3	35	62	20,0	27,80	0,2	24,5	21,4
	3007 2RS	0	3	35	62	20,0	27,80	0,2	24,5	21,4
	3207 ZZ	2	3	35	72	27,0	33,80	0,44	37,1	27,5
	3207 2RS	2	3	35	72	27,0	33,80	0,44	37,1	27,5
	3207	2	3	35	72	27,0	33,80	0,44	37,1	27,5
	3307 ZZ	3	3	35	80	34,9	42,20	0,73	48,8	34
	3307 2RS	3	3	35	80	34,9	42,20	0,73	48,8	34
	3307	3	3	35	80	34,9	42,20	0,73	48,8	34
40	**3808 ZZ**	8	3	40	52	10,0	22,40	0,04	7	7,8
	3808 2RS	8	3	40	52	10,0	22,40	0,04	7	7,8
	3008 ZZ	0	3	40	68	21,0	30,80	0,25	25,5	21,7
	3008 2RS	0	3	40	68	21,0	30,80	0,25	25,5	21,7
	3208 ZZ	2	3	40	80	30,2	38,30	0,59	44,9	33,5
	3208 2RS	2	3	40	80	30,2	38,30	0,59	44,9	33,5
	3208	2	3	40	80	30,2	38,30	0,59	44,9	33,5
	3308 ZZ	3	3	40	90	36,5	43,70	0,95	56,2	43
	3308 2RS	3	3	40	90	36,5	43,70	0,95	56,2	43
	3308	3	3	40	90	36,5	43,70	0,95	56,2	43
45	**3809 ZZ**	8	3	45	58	10,0	24,20	0,053	7,2	8,3
	3809 2RS	8	3	45	58	10,0	24,20	0,053	7,2	8,3
	3209 ZZ	2	3	45	85	30,2	40,50	0,63	47,5	38

- warehouse - order - phone

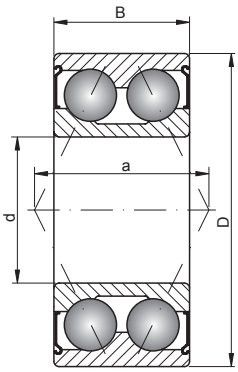

ZZ

Limiting speed [rpm]		Basic makes*		Bearing No.
grease	oil	-	TN	
11000	14300			**3004 ZZ**
11000	-			**3004 2RS**
9000	13000			**3204 ZZ**
9000	-			**3204 2RS**
9000	13000			**3204**
8500	12000			**3304 ZZ**
8500	-			**3304 2RS**
8500	12000			**3304**
11500	15000			**3805 ZZ**
11500	-			**3805 2RS**
9500	12400			**3005 ZZ**
9500	-			**3005 2RS**
8000	11000			**3205 ZZ**
8000	-			**3205 2RS**
8000	11000			**3205**
7500	10000			**3305 ZZ**
7500	-			**3305 2RS**
7500	10000			**3305**
10000	13000			**3806 ZZ**
10000	-			**3806 2RS**
8000	10400			**3006 ZZ**
8000	-			**3006 2RS**
7000	9500			**3206 ZZ**
7000	-			**3206 2RS**
7000	9500			**3206**
6300	8500			**3306 ZZ**
6300	-			**3306 2RS**
6300	8500			**3306**
8500	11000			**3807 ZZ**
8500	-			**3807 2RS**
6600	8600			**3007 ZZ**
6600	-			**3007 2RS**
6000	8000			**3207 ZZ**
6000	-			**3207 2RS**
6000	8000			**3207**
5600	7500			**3307 ZZ**
5600	-			**3307 2RS**
5600	7500			**3307**
7000	9100			**3808 ZZ**
7000	-			**3808 2RS**
6300	8200			**3008 ZZ**
6300	-			**3008 2RS**
5600	7500			**3208 ZZ**
5600	-			**3208 2RS**
5600	7500			**3208**
5000	6700			**3308 ZZ**
5000	-			**3308 2RS**
5000	6700			**3308**
6500	8400			**3809 ZZ**
6500	-			**3809 2RS**
5000	6700			**3209 ZZ**

* Other products also available

https://nppnovoteh.com

2. ANGULAR CONTACT RADIAL BALL BEARINGS

2.4. Double-row angular-contact ball bearings



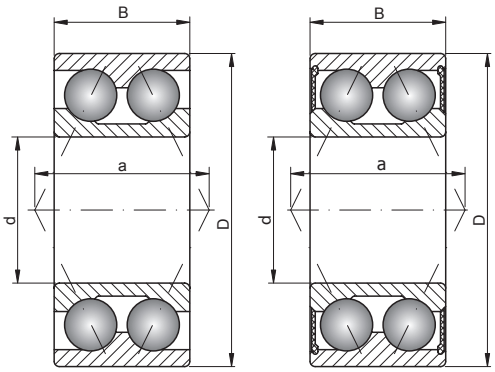

38.. 39.. 30.. 32.. 33..

2RS

45 – 75 mm

Shaft [mm]	Bearing No.	Series		Dimensions [mm]				Weight [kg]	Basic load ratings [kN]	
		SD	SB	d	D	B	a		dyn. C	stat. C_0
45 cont.	**3209 2RS**	2	3	45	85	30,2	40,50	0,63	47,5	38
	3209	2	3	45	85	30,2	40,50	0,63	47,5	38
	3309 ZZ	3	3	45	100	39,7	48,60	1,4	72,1	73,5
	3309 2RS	3	3	45	100	39,7	48,60	1,4	72,1	73,5
	3309	3	3	45	100	39,7	48,60	1,4	72,1	73,5
50	**3810 ZZ**	8	3	50	65	12,0	27,10	0,07	8,7	10,4
	3810 2RS	8	3	50	65	12,0	27,10	0,07	8,7	10,4
	3210 ZZ	2	3	50	90	30,2	42,50	0,66	47,5	39
	3210 2RS	2	3	50	90	30,2	42,50	0,66	47,5	39
	3210	2	3	50	90	30,2	42,50	0,66	47,5	39
	3310 ZZ	3	3	50	110	44,4	53,50	1,95	88	96,5
	3310 2RS	3	3	50	110	44,4	53,50	1,95	88	96,5
	3310	3	3	50	110	44,4	53,50	1,95	88	96,5
55	**3811 ZZ**	8	3	55	72	13,0	30,70	0,09	12,1	15,7
	3811 2RS	8	3	55	72	13,0	30,70	0,09	12,1	15,7
	3211 ZZ	2	3	55	100	33,3	50,70	1,05	57,2	67
	3211 2RS	2	3	55	100	33,3	50,70	1,05	57,2	67
	3211	2	3	55	100	33,3	50,70	1,05	57,2	67
	3311 ZZ	3	3	55	120	49,2	56,50	2,55	95,2	108
	3311 2RS	3	3	55	120	49,2	56,50	2,55	95,2	108
	3311	3	3	55	120	49,2	56,50	2,55	95,2	108
60	**3812 ZZ**	8	3	60	78	14,0	33,20	0,14	14,5	17,5
	3812 2RS	8	3	60	78	14,0	33,20	0,14	14,5	17,5
	3212 ZZ	2	3	60	110	36,5	52,20	1,4	72,1	85
	3212 2RS	2	3	60	110	36,5	52,20	1,4	72,1	85
	3212	2	3	60	110	36,5	52,20	1,4	72,1	85
	3312 ZZ	3	3	60	130	54,0	62,90	3,25	112	127
	3312 2RS	3	3	60	130	54,0	62,90	3,25	112	127
	3312	3	3	60	130	54,0	62,90	3,25	112	127
65	**3213 ZZ**	2	3	65	120	38,1	60,40	1,7	86	75
	3213 2RS	2	3	65	120	38,1	60,40	1,7	86	75
	3213	2	3	65	120	38,1	60,40	1,75	78,1	95
	3313 ZZ	3	3	65	140	58,7	69,30	4	160	126
	3313 2RS	3	3	65	140	58,7	69,30	4	160	126
	3313	3	3	65	140	58,7	69,30	4,1	128	150
70	**3814 ZZ**	8	3	70	90	15,0	38,50	0,19	19,2	23,8
	3814 2RS	8	3	70	90	15,0	38,50	0,19	19,2	23,8
	3214 ZZ	2	3	70	125	39,7	59,20	1,85	95	83
	3214 2RS	2	3	70	125	39,7	59,20	1,85	95	83
	3214	2	3	70	125	39,7	59,20	1,9	76,5	98
	3314 ZZ	3	3	70	150	63,5	72,50	4,9	161	130
	3314 2RS	3	3	70	150	63,5	72,50	4,9	161	130
	3314	3	3	70	150	63,5	72,50	5,05	147	173
75	**3215 ZZ**	2	3	75	130	41,3	61,30	2	95	84
	3215 2RS	2	3	75	130	41,3	61,30	2	95	84
	3215	2	3	75	130	41,3	61,30	2,1	84,2	110
	3315 ZZ	3	3	75	160	68,3	84,30	5,7	187	160
	3315 2RS	3	3	75	160	68,3	84,30	5,7	187	160
	3315	3	3	75	160	68,3	84,30	6,15	157	186

- warehouse - order - phone

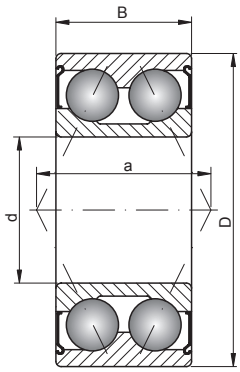

ZZ

Limiting speed [rpm]		Basic makes*		Bearing No.
grease	oil	-	TN	
5000	-			**3209 2RS**
5000	6700			**3209**
4500	6000			**3309 ZZ**
4500	-			**3309 2RS**
4500	6000			**3309**
6000	7800			**3810 ZZ**
6000	-			**3810 2RS**
4800	6300			**3210 ZZ**
4800	-			**3210 2RS**
4800	6300			**3210**
4000	5300			**3310 ZZ**
4000	-			**3310 2RS**
4000	5300			**3310**
5500	7200			**3811 ZZ**
5500	-			**3811 2RS**
4300	5600			**3211 ZZ**
4300	-			**3211 2RS**
4300	5600			**3211**
3800	5000			**3311 ZZ**
3800	-			**3311 2RS**
3800	5000			**3311**
5000	6500			**3812 ZZ**
5000	-			**3812 2RS**
3800	5000			**3212 ZZ**
3800	-			**3212 2RS**
3800	5000			**3212**
3400	4500			**3312 ZZ**
3400	-			**3312 2RS**
3400	4500			**3312**
3200	4000			**3213 ZZ**
3200	-			**3213 2RS**
3600	4800			**3213**
2700	3400			**3313 ZZ**
2700	-			**3313 2RS**
3200	4300			**3313**
4400	5700			**3814 ZZ**
4400	-			**3814 2RS**
2900	3600			**3214 ZZ**
2900	-			**3214 2RS**
3200	4300			**3214**
2500	3100			**3314 ZZ**
2500	-			**3314 2RS**
2800	3800			**3314**
2900	3600			**3215 ZZ**
2900	-			**3215 2RS**
3200	4300			**3215**
2400	3000			**3315 ZZ**
2400	-			**3315 2RS**
2600	3600			**3315**

* Other products also available

https://nppnovoteh.com

2. ANGULAR CONTACT RADIAL BALL BEARINGS

2.4. Double-row angular-contact ball bearings



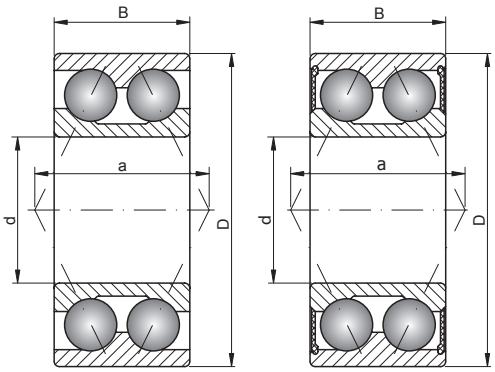

38.. 39.. 30.. 32.. 33..

2RS

80 – 110 mm

Shaft [mm]	Bearing No.	Series		Dimensions [mm]				Weight [kg]	Basic load ratings [kN]	
		SD	SB	d	D	B	a		dyn. C	stat. C_0
80	**3816 ZZ**	8	3	80	100	15,0	42,20	0,23	19,6	25,5
	3816 2RS	8	3	80	100	15,0	42,20	0,23	19,6	25,5
	3216 ZZ	2	3	80	140	44,4	65,30	2,6	109	102
	3216 2RS	2	3	80	140	44,4	65,30	2,6	109	102
	3216	2	3	80	140	44,4	65,30	2,65	101	134
	3316 ZZ	3	3	80	170	68,3	88,60	6,6	198	179
	3316 2RS	3	3	80	170	68,3	88,60	6,6	198	179
	3316	3	3	80	170	68,3	88,60	6,95	176	212
85	**3217 ZZ**	2	3	85	150	49,2	68,60	3,3	129	117
	3217 2RS	2	3	85	150	49,2	68,60	3,3	129	117
	3217	2	3	85	150	49,2	68,60	3,4	110	146
	3317	3	3	85	180	73,0	92,00	8,3	194	240
90	**3818 ZZ**	8	3	90	115	19,0	55,00	0,457	27	35,5
	3818 2RS	8	3	90	115	19,0	55,00	0,457	27	35,5
	3218 ZZ	2	3	90	160	52,4	81,40	4	142	142
	3218 2RS	2	3	90	160	52,4	81,40	4	142	142
	3218	2	3	90	160	52,4	81,40	4,15	128	173
	3318 2RS	3	3	90	190	73,0	98,00	8,8	220	211
	3318	3	3	90	190	73,0	98,00	9,25	220	285
95	**3219**	2	3	95	170	55,6	83,40	5	147	204
	3319	3	3	95	200	77,8	104,00	11	238	315
100	**3820 2RS**	8	3	100	125	19,0	60,20	0,5	28	39
	3220 ZZ	2	3	100	180	60,3	85,40	5,5	187	175
	3220 2RS	2	3	100	180	60,3	85,40	5,5	187	175
	3220	2	3	100	180	60,3	85,40	6,1	157	220
	3320 2RS	3	3	100	215	82,6	110,70	12,5	260	270
	3320	3	3	100	215	82,6	110,70	13,5	255	355
110	**3222**	2	3	110	200	69,8	89,40	8,8	190	270
	3322	3	3	110	240	92,1	117,00	19	292	425

- warehouse - order - phone

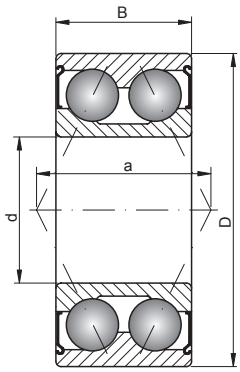

ZZ

Limiting speed [rpm]		Basic makes*		Bearing No.
grease	oil	-	TN	
4000	5200			**3816 ZZ**
4000	-			**3816 2RS**
2500	3100			**3216 ZZ**
2500	-			**3216 2RS**
2800	3800			**3216**
2300	2800			**3316 ZZ**
2300	-			**3316 2RS**
2400	3400			**3316**
2300	2800			**3217 ZZ**
2300	-			**3217 2RS**
2600	3600			**3217**
2200	3200			**3317**
3300	4700			**3818 ZZ**
3300	-			**3818 2RS**
2200	2650			**3218 ZZ**
2200	-			**3218 2RS**
2400	3400			**3218**
2000	-			**3318 2RS**
2000	3000			**3318**
2200	3200			**3219**
1900	2800			**3319**
3100	-			**3820 2RS**
2000	2500			**3220 ZZ**
2000	-			**3220 2RS**
2000	3000			**3220**
1800	-			**3320 2RS**
1800	2600			**3320**
1900	2800			**3222**
1700	2400			**3322**

* Other products also available

https://nppnovoteh.com

2. ANGULAR-CONTACT RADIAL BALL BEARINGS

2.5. Single-row angular-contact double-direction ball bearings (Q, QJ)



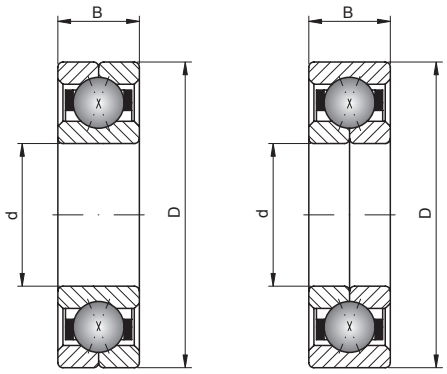

10 – 50 mm

Shaft [mm]	Bearing No.	Series		Dimensions [mm]			Weight [kg]	Basic load ratings [kN]	
		SD	SB	d	D	B		dyn. C	stat. C_0
10	**QJ200**	2	0	10	30	9	0,037	6,3	3,7
12	**QJ201**	2	0	12	32	10	0,045	9,5	6
15	**Q202**	2	0	15	35	11	0,063	12,4	8,1
	QJ202	2	0	15	35	11	0,062	12,7	8,3
	QJ302	3	0	15	42	13	0,11	17,2	10
17	**Q203**	2	0	17	40	12	0,084	15,6	10,4
	QJ203	2	0	17	40	12	0,082	15,9	10,6
	Q303	3	0	17	47	14	0,1	23	15
	QJ303	3	0	17	47	14	0,14	23,4	15
20	**Q204**	2	0	20	47	14	0,134	18,7	15,7
	QJ204	2	0	20	47	14	0,13	19,1	16
	Q304	3	0	20	52	15	0,2	29	20
	QJ304	3	0	20	52	15	0,18	29,6	20
25	**Q1005**	0	0	25	47	12	0,092	31	27
	QJ1005	0	0	25	47	12	0,092	32	28
	Q205	2	0	25	52	15	0,162	24,6	19,6
	QJ205	2	0	25	52	15	0,16	25,1	20
	Q305	3	0	25	62	17	0,3	38	27
	QJ305	3	0	25	62	17	0,29	39	28
30	**Q1006**	0	0	30	55	13	0,13	32	30
	QJ1006	0	0	30	55	13	0,13	33	31
	Q206	2	0	30	62	16	0,245	34,4	27,9
	QJ206	2	0	30	62	16	0,24	35,1	28,5
	Q306	3	0	30	72	19	0,4	48	37
	QJ306	3	0	30	72	19	0,42	49,4	38
35	**Q1007**	0	0	35	62	14	0,2	42	38
	QJ1007	0	0	35	62	14	0,2	43	39
	Q207	2	0	35	72	17	0,37	45,3	38,2
	QJ207	2	0	35	72	17	0,36	46,2	39
	Q307	3	0	35	80	21	0,6	58	46
	QJ307	3	0	35	80	21	0,57	59,2	46,5
40	**Q1008**	0	0	40	68	15	0,25	44	40
	QJ1008	0	0	40	68	15	0,25	45	41
	Q208	2	0	40	80	18	0,45	51,6	44,1
	QJ208	2	0	40	80	18	0,45	52,7	45
	Q308	3	0	40	90	23	0,8	70	57
	QJ308	3	0	40	90	23	0,78	71,5	58,5
45	**Q1009**	0	0	45	75	16	0,32	51	48
	QJ1009	0	0	45	75	16	0,32	52	49
	Q209	2	0	45	85	19	0,53	57,3	50
	QJ209	2	0	45	85	19	0,52	58,5	51
	Q309	3	0	45	100	25	1,1	92	75
	QJ309	3	0	45	100	25	1,05	93,6	76,5
50	**Q1010**	0	0	50	80	16	0,34	54	51
	QJ1010	0	0	50	80	16	0,34	55	52
	Q210	2	0	50	90	20	0,61	60,6	54,9

- warehouse - order - phone



Limiting speed [rpm]		Basic makes*				Bearing No.
grease	oil	-	M	TVP	P5	
19550	27900	◴	◝	◝	◝	**QJ200**
17450	24900	◴	◝	◝	◝	**QJ201**
15043	21462	◝	◝	◝	◝	**Q202**
15350	21900	◴	◝	◝	◝	**QJ202**
13250	18900	◓	◴	◴	◝	**QJ302**
12985	18522	◝	◝	◝	◝	**Q203**
13250	18900	◓	◴	◴	◝	**QJ203**
11613	16562	◝	◝	◝	◝	**Q303**
11850	16900	◓	◴	◴	◝	**QJ303**
10927	15582	◝	◝	◝	◝	**Q204**
11150	15900	◓	◴	◴	◝	**QJ204**
10241	14602	◝	◝	◝	◝	**Q304**
10450	14900	◓	◴	◴	◝	**QJ304**
8232	9604	◝	◝	◝	◝	**Q1005**
8400	9800	◝	◝	◝	◝	**QJ1005**
9555	13622	◝	◝	◝	◝	**Q205**
9750	13900	◓	◴	◴	◝	**QJ205**
8183	11662	◝	◝	◝	◝	**Q305**
8350	11900	◓	◴	◴	◝	**QJ305**
7546	8820	◝	◝	◝	◝	**Q1006**
7700	9000	◝	◝	◝	◝	**QJ1006**
8183	11662	◝	◝	◝	◝	**Q206**
8350	11900	◓	◴	◴	◝	**QJ206**
6811	9702	◝	◝	◝	◝	**Q306**
6950	9900	◓	◴	◴	◝	**QJ306**
6860	8134	◝	◝	◝	◝	**Q1007**
7000	8300	◝	◝	◝	◝	**QJ1007**
6811	9702	◝	◝	◝	◝	**Q207**
6950	9900	◓	◴	◴	◝	**QJ207**
6468	9212	◝	◝	◝	◝	**Q307**
6600	9400	◓	◴	◴	◝	**QJ307**
6174	7546	◝	◝	◝	◝	**Q1008**
6300	7700	◝	◝	◝	◝	**QJ1008**
6125	8722	◝	◝	◝	◝	**Q208**
6250	8900	◓	◴	◴	◝	**QJ208**
5782	8232	◝	◝	◝	◝	**Q308**
5900	8400	◓	◴	◴	◝	**QJ308**
5880	6958	◝	◝	◝	◝	**Q1009**
6000	7100	◝	◝	◝	◝	**QJ1009**
5782	8232	◝	◝	◝	◝	**Q209**
5900	8400	◓	◴	◴	◝	**QJ209**
5096	7252	◝	◝	◝	◝	**Q309**
5200	7400	◓	◴	◴	◝	**QJ309**
5390	6566	◝	◝	◝	◝	**Q1010**
5500	6700	◝	◝	◝	◝	**QJ1010**
5096	7252	◝	◝	◝	◝	**Q210**

* Other products also available

https://nppnovoteh.com

2. ANGULAR-CONTACT RADIAL BALL BEARINGS

2.5. Single-row angular-contact double-direction ball bearings (Q, QJ)



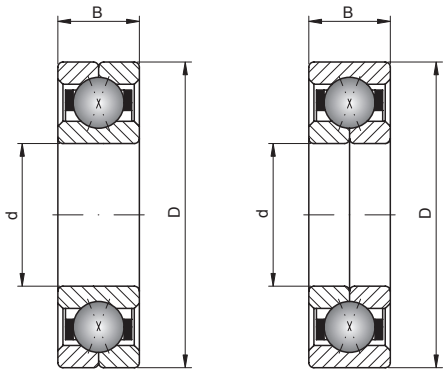

50 – 90 mm

Shaft [mm]	Bearing No.	Series		Dimensions [mm]			Weight [kg]	Basic load ratings [kN]	
		SD	SB	d	D	B		dyn. C	stat. C_0
50 cont.	**QJ210**	2	0	50	90	20	0,59	61,8	56
	Q310	3	0	50	110	27	1,4	109	90
	QJ310	3	0	50	110	27	1,35	111	91,5
55	**Q1011**	0	0	55	90	18	0,49	60	61
	QJ1011	0	0	55	90	18	0,49	61	62
	Q211	2	0	55	100	21	0,78	77,7	75
	QJ211	2	0	55	100	21	0,77	79,3	76,5
	Q311	3	0	55	120	29	1,8	124	106
	QJ311	3	0	55	120	29	1,75	127	108
60	**Q1012**	0	0	60	95	18	0,52	64	66
	QJ1012	0	0	60	95	18	0,52	65	67
	Q212	2	0	60	110	22	1,01	90,5	84,8
	QJ212	2	0	60	110	22	0,99	92,3	86,5
	Q312	3	0	60	130	31	2,2	143	123
	QJ312	3	0	60	130	31	2,15	146	125
65	**Q1013**	0	0	65	100	18	0,56	67	70
	QJ1013	0	0	65	100	18	0,56	68	71
	Q213	2	0	65	120	23	1,24	102	102
	QJ213	2	0	65	120	23	1,2	104	104
	Q313	3	0	65	140	33	2,8	162	143
	QJ313	3	0	65	140	33	2,7	165	146
70	**Q1014**	0	0	70	110	20	0,77	71	78
	QJ1014	0	0	70	110	20	0,77	72	80
	Q214	2	0	70	125	24	1,31	112	112
	QJ214	2	0	70	125	24	1,3	114	114
	Q314	3	0	70	150	35	3,2	182	163
	QJ314	3	0	70	150	35	3,15	186	166
75	**Q1015**	0	0	75	115	20	0,81	76	91
	QJ1015	0	0	75	115	20	0,81	78	93
	Q215	2	0	75	130	25	1,48	115	120
	QJ215	2	0	75	130	25	1,45	117	122
	Q315	3	0	75	160	37	4	195	182
	QJ315	3	0	75	160	37	3,9	199	186
80	**Q1016**	0	0	80	125	22	1,09	78	97
	QJ1016	0	0	80	125	22	1,09	80	99
	Q216	2	0	80	140	26	1,91	135	143
	QJ216	2	0	80	140	26	1,85	138	146
	Q316	3	0	80	170	39	4,7	212	204
	QJ316	3	0	80	170	39	4,6	216	208
85	**Q1017**	0	0	85	130	22	1,1	83	100
	QJ1017	0	0	85	130	22	1,1	85	102
	Q217	2	0	85	150	28	2,27	145	157
	QJ217	2	0	85	150	28	2,25	148	160
	Q317	3	0	85	180	41	5,6	229	231
	QJ317	3	0	85	180	41	5,45	234	236
90	**Q1018**	0	0	90	140	24	1,47	95	113
	QJ1018	0	0	90	140	24	1,47	97	115
	Q218	2	0	90	160	30	2,81	171	182

- warehouse - order - phone



Limiting speed [rpm]		Basic makes*				Bearing No.
grease	oil	-	M	TVP	P5	
5200	7400					QJ210
4557	6468					Q310
4650	6600					QJ310
5096	6076					Q1011
5200	6200					QJ1011
4753	6762					Q211
4850	6900					QJ211
4067	5782					Q311
4150	5900					QJ311
4704	5782					Q1012
4800	5900					QJ1012
4263	6076					Q212
4350	6200					QJ212
3773	5390					Q312
3850	5500					QJ312
4410	5488					Q1013
4500	5600					QJ1013
3773	5390					Q213
3850	5500					QJ213
3577	5096					Q313
3650	5200					QJ313
4214	5292					Q1014
4300	5400					QJ1014
3773	5390					Q214
3850	5500					QJ214
3234	4606					Q314
3300	4700					QJ314
4018	5096					Q1015
4100	5200					QJ1015
3577	5096					Q215
3650	5200					QJ215
3038	4312					Q315
3100	4400					QJ315
3724	4900					Q1016
3800	5000					QJ1016
3234	4606					Q216
3300	4700					QJ216
2891	4116					Q316
2950	4200					QJ316
3381	4704					Q1017
3450	4800					QJ1017
3038	4312					Q217
3100	4400					QJ217
2695	3822					Q317
2750	3900					QJ317
3136	4410					Q1018
3200	4500					QJ1018
2891	4116					Q218

* Other products also available

https://nppnovoteh.com

2. ANGULAR-CONTACT RADIAL BALL BEARINGS

2.5. Single-row angular-contact double-direction ball bearings (Q, QJ)



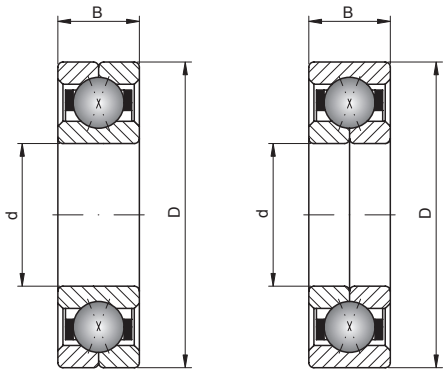

90 – 150 mm

Shaft [mm]	Bearing No.	Series		Dimensions [mm]			Weight [kg]	Basic load ratings [kN]	
		SD	SB	d	D	B		dyn. C	stat. C_0
90 cont.	**QJ218**	2	0	90	160	30	2,75	174	186
	Q318	3	0	90	190	43	6,6	260	279
	QJ318	3	0	90	190	43	6,45	265	285
95	**Q1019**	0	0	95	145	24	1,54	103	124
	QJ1019	0	0	95	145	24	1,54	105	127
	Q219	2	0	95	170	32	3,45	195	208
	QJ219	2	0	95	170	32	3,35	199	212
	Q319	3	0	95	200	45	7,5	280	309
	QJ319	3	0	95	200	45	7,45	286	315
100	**Q1020**	0	0	100	150	24	1,61	109	142
	QJ1020	0	0	100	150	24	1,61	111	145
	Q220	2	0	100	180	34	4,09	221	235
	QJ220	2	0	100	180	34	4,05	225	240
	Q320	3	0	100	215	47	9,5	301	333
	QJ320	3	0	100	215	47	9,3	307	340
105	**Q1021**	0	0	105	160	26	2	122	153
	QJ1021	0	0	105	160	26	2	124	156
	QJ221	2	0	105	190	36	4,75	251	268
	Q321	3	0	105	225	49	11,5	321	358
	QJ321	3	0	105	225	49	11,15	328	365
110	**Q1022**	0	0	110	170	28	2,5	143	182
	QJ1022	0	0	110	170	28	2,5	146	186
	Q222	2	0	110	200	38	5,71	260	299
	QJ222	2	0	110	200	38	5,6	265	305
	Q322	3	0	110	240	50	12,8	382	466
	QJ322	3	0	110	240	50	12,5	390	475
120	**Q1024**	0	0	120	180	28	2,72	165	212
	QJ1024	0	0	120	180	28	2,72	168	216
	Q224	2	0	120	215	40	7,16	280	333
	QJ224	2	0	120	215	40	6,95	286	340
	Q324	3	0	120	260	55	16,5	382	480
	QJ324	3	0	120	260	55	16	390	490
130	**Q1026**	0	0	130	200	33	4,15	186	241
	QJ1026	0	0	130	200	33	4,15	190	246
	Q226	2	0	130	230	40	7,91	290	358
	QJ226	2	0	130	230	40	7,75	296	365
	Q326	3	0	130	280	58	19,7	415	549
	QJ326	3	0	130	280	58	19,5	423	560
140	**Q1028**	0	0	140	210	33	4,4	208	270
	QJ1028	0	0	140	210	33	4,4	212	276
	Q228	2	0	140	250	42	10,15	319	431
	QJ228	2	0	140	250	42	9,85	325	440
	Q328	3	0	140	300	62	24,5	459	627
	QJ328	3	0	140	300	62	24	468	640
150	**Q1030**	0	0	150	225	35	5,25	212	299
	QJ1030	0	0	150	225	35	5,25	216	305
	Q230	2	0	150	270	45	12,63	369	519
	QJ230	2	0	150	270	45	12,5	377	530

- warehouse - order - phone



Limiting speed [rpm]		Basic makes*				Bearing No.
grease	oil	-	M	TVP	P5	
2950	4200					QJ218
2548	3626					Q318
2600	3700					QJ318
2989	4214					Q1019
3050	4300					QJ1019
2695	3822					Q219
2750	3900					QJ219
2401	3430					Q319
2450	3500					QJ319
2842	4018					Q1020
2900	4100					QJ1020
2548	3626					Q220
2600	3700					QJ220
2303	3234					Q320
2350	3300					QJ320
2695	3822					Q1021
2750	3900					QJ1021
2450	3500					QJ221
2205	3038					Q321
2250	3100					QJ321
2548	3626					Q1022
2600	3700					QJ1022
2303	3234					Q222
2350	3300					QJ222
2009	2842					Q322
2050	2900					QJ322
2401	3430					Q1024
2450	3500					QJ1024
2156	3038					Q224
2200	3100					QJ224
1862	2646					Q324
1900	2700					QJ324
2254	3234					Q1026
2300	3300					QJ1026
1862	2646					Q226
1900	2700					QJ226
1715	2450					Q326
1750	2500					QJ326
2107	3038					Q1028
2150	3100					QJ1028
1715	2450					Q228
1750	2500					QJ228
1617	2254					Q328
1650	2300					QJ328
1862	2646					Q1030
1900	2700					QJ1030
1617	2254					Q230
1650	2300					QJ230

* Other products also available

https://nppnovoteh.com

2. ANGULAR-CONTACT RADIAL BALL BEARINGS

2.5. Single-row angular-contact double-direction ball bearings (Q, QJ)



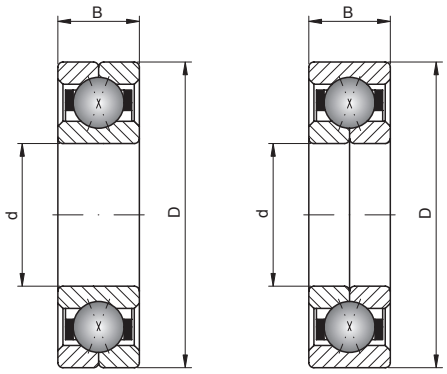

150 – 280 mm

Shaft [mm]	Bearing No.	Series		Dimensions [mm]			Weight [kg]	Basic load ratings [kN]	
		SD	SB	d	D	B		dyn. C	stat. C_0
150 cont.	**Q330**	3	0	150	320	65	29,6	484	696
	QJ330	3	0	150	320	65	29	494	710
160	**Q1032**	0	0	160	240	38	6,45	242	348
	QJ1032	0	0	160	240	38	6,45	247	355
	Q232	2	0	160	290	48	15,81	415	608
	QJ232	2	0	160	290	48	15,5	423	620
	Q332	3	0	160	340	68	35,5	529	799
	QJ332	3	0	160	340	68	34,5	540	815
170	**Q1034**	0	0	170	260	42	8,69	255	383
	QJ1034	0	0	170	260	42	8,69	260	391
	Q234	2	0	170	310	52	20,09	427	657
	QJ234	2	0	170	310	52	19,5	436	670
	Q334	3	0	170	360	72	41,9	606	946
	QJ334	3	0	170	360	72	41,5	618	965
180	**Q1036**	0	0	180	280	46	11,55	271	441
	QJ1036	0	0	180	280	46	11,55	277	450
	Q236	2	0	180	320	52	20,91	440	696
	QJ236	2	0	180	320	52	20,5	449	710
	Q336	3	0	180	380	75	48,5	624	1000
	QJ336	3	0	180	380	75	47,5	637	1020
190	**Q1038**	0	0	190	290	46	11,5	331	500
	QJ1038	0	0	190	290	46	11,5	338	510
	Q338	3	0	190	400	78	50	688	1094
	QJ338	3	0	190	400	78	49	702	1116
200	**Q1040**	0	0	200	310	51	15	382	608
	QJ1040	0	0	200	310	51	15	390	620
	Q240	2	0	200	360	58	29,4	529	897
	QJ240	2	0	200	360	58	28,5	540	915
	QJ1240	2	1	200	360	70	32,5	520	865
	Q340	3	0	200	420	80	56	752	1188
	QJ340	3	0	200	420	80	54	767	1212
220	**Q1044**	0	0	220	340	56	20,35	433	715
	QJ1044	0	0	220	340	56	20,35	442	730
	Q244	2	0	220	400	65	39,9	539	956
	QJ244	2	0	220	400	65	39,5	550	975
	QJ1244	2	1	220	400	78	45,5	592	1020
	QJ344	3	0	220	460	88	78	780	1400
240	**Q1048**	0	0	240	360	56	22,11	484	823
	QJ1048	0	0	240	360	56	22,11	494	840
	Q248	2	0	240	440	72	54,1	637	1176
	QJ248	2	0	240	440	72	53	650	1200
	QJ1248	2	1	240	440	85	61	663	1220
260	**Q1052**	0	0	260	400	65	32,12	535	931
	QJ1052	0	0	260	400	65	32,12	546	950
	QJ252	2	0	260	480	80	68	728	1430
	QJ1252	2	1	260	480	90	78	741	1460
280	**Q1056**	0	0	280	420	65	33,5	542	1039

- warehouse - order - phone



Limiting speed [rpm]		Basic makes*				Bearing No.
grease	oil	-	M	TVP	P5	
1470	2058	●	●	●	●	**Q330**
1500	2100	▲	◴	◴	●	**QJ330**
1715	2450	●	●	●	●	**Q1032**
1750	2500	●	●	●	●	**QJ1032**
1470	2058	●	●	●	●	**Q232**
1500	2100	◴	●	●	●	**QJ232**
1323	1862	●	●	●	●	**Q332**
1350	1900	◴	●	●	●	**QJ332**
1666	2352	●	●	●	●	**Q1034**
1700	2400	●	●	●	●	**QJ1034**
1470	2058	●	●	●	●	**Q234**
1500	2100	◴	●	●	●	**QJ234**
1274	1764	●	●	●	●	**Q334**
1300	1800	◴	●	●	●	**QJ334**
1617	2254	●	●	●	●	**Q1036**
1650	2300	●	●	●	●	**QJ1036**
1323	1862	●	●	●	●	**Q236**
1350	1900	◴	●	●	●	**QJ236**
1176	1666	●	●	●	●	**Q336**
1200	1700	◴	●	●	●	**QJ336**
1470	2058	●	●	●	●	**Q1038**
1500	2100	●	●	●	●	**QJ1038**
1127	1568	●	●	●	●	**Q338**
1150	1600	◴	●	●	●	**QJ338**
1323	1862	●	●	●	●	**Q1040**
1350	1900	●	●	●	●	**QJ1040**
1176	1666	●	●	●	●	**Q240**
1200	1700	◴	●	●	●	**QJ240**
1200	1700	●	●	●	●	**QJ1240**
1078	1470	●	●	●	●	**Q340**
1100	1500	◴	●	●	●	**QJ340**
1176	1666	●	●	●	●	**Q1044**
1200	1700	●	●	●	●	**QJ1044**
1029	1421	●	●	●	●	**Q244**
1050	1450	◴	●	●	●	**QJ244**
1050	1500	●	●	●	●	**QJ1244**
1000	1400	◴	●	●	●	**QJ344**
1078	1470	●	●	●	●	**Q1048**
1100	1500	●	●	●	●	**QJ1048**
980	1372	●	●	●	●	**Q248**
1000	1400	◴	●	●	●	**QJ248**
1000	1400	●	●	●	●	**QJ1248**
980	1372	●	●	●	●	**Q1052**
1000	1400	●	●	●	●	**QJ1052**
850	1200	◴	●	●	●	**QJ252**
850	1200	●	●	●	●	**QJ1252**
931	1274	●	●	●	●	**Q1056**

* Other products also available

https://nppnovoteh.com

2. ANGULAR-CONTACT RADIAL BALL BEARINGS

2.5. Single-row angular-contact double-direction ball bearings (Q, QJ)



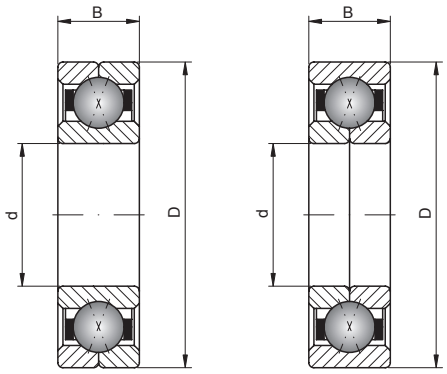

280 – 480 mm

Shaft [mm]	Bearing No.	Series		Dimensions [mm]			Weight [kg]	Basic load ratings [kN]	
		SD	SB	d	D	B		dyn. C	stat. C_0
280 cont.	**QJ1056**	0	0	280	420	65	33,5	553	1060
	QJ1256	2	1	280	500	90	82	728	1460
300	**Q1060**	0	0	300	460	74	48	637	1313
	QJ1060	0	0	300	460	74	47,5	650	1340
	QJ1260	2	1	300	540	98	105	832	1760
320	**Q1064**	0	0	320	480	74	51	701	1499
	QJ1064	0	0	320	480	74	50	715	1530
	QJ1264	2	1	320	580	105	130	923	2040
340	**Q1068**	0	0	340	520	82	70	764	1666
	QJ1068	0	0	340	520	82	67,5	780	1700
	QJ1268	2	1	340	620	118	165	1060	2450
360	**Q1072**	0	0	360	540	82	71	777	1764
	QJ1072	0	0	360	540	82	70,5	793	1800
	QJ1272	2	1	360	650	122	190	1110	2600
380	**Q1076**	0	0	380	560	82	75	803	1862
	QJ1076	0	0	380	560	82	73,5	819	1900
	QJ1276	2	1	380	680	132	220	1170	2850
400	**Q1080**	0	0	400	600	90	98	886	2117
	QJ1080	0	0	400	600	90	95,5	904	2160
	QJ1280	2	1	400	720	140	265	1300	3250
420	**QJ1984**	9	0	420	560	65	51	637	1600
	Q1084	0	0	420	620	90	100	905	2234
	QJ1084	0	0	420	620	90	99,5	923	2280
	QJ1284	2	1	420	760	150	315	1430	3750
440	**QJ1988**	9	0	440	600	74	65	761	1900
	Q1088	0	0	440	650	94	117	975	2450
	QJ1088	0	0	440	650	94	115	995	2500
	QJ1288	2	1	440	790	155	350	1400	3750
460	**Q1092**	0	0	460	680	100	134	1019	2597
	QJ1092	0	0	460	680	100	130	1040	2650
	QJ1292	2	1	460	830	165	415	1530	4250
480	**Q1096**	0	0	480	700	100	140	1039	2744
	QJ1096	0	0	480	700	100	135	1060	2800
	QJ1296	2	1	480	870	170	470	1680	4750

- warehouse - order - phone



Limiting speed [rpm]		Basic makes*				Bearing No.
grease	oil	-	M	TVP	P5	
950	1300	✓	✓	✓	✓	**QJ1056**
850	1200	✓	✓	✓	✓	**QJ1256**
833	1176	✓	✓	✓	✓	**Q1060**
850	1200	✓	✓	✓	✓	**QJ1060**
800	1100	✓	✓	✓	✓	**QJ1260**
784	1078	✓	✓	✓	✓	**Q1064**
800	1100	✓	✓	✓	✓	**QJ1064**
700	1000	✓	✓	✓	✓	**QJ1264**
686	980	✓	✓	✓	✓	**Q1068**
700	1000	✓	✓	✓	✓	**QJ1068**
650	900	✓	✓	✓	✓	**QJ1268**
686	980	✓	✓	✓	✓	**Q1072**
700	1000	✓	✓	✓	✓	**QJ1072**
600	850	✓	✓	✓	✓	**QJ1272**
637	882	✓	✓	✓	✓	**Q1076**
650	900	✓	✓	✓	✓	**QJ1076**
600	800	✓	✓	✓	✓	**QJ1276**
588	833	✓	✓	✓	✓	**Q1080**
600	850	✓	✓	✓	✓	**QJ1080**
500	700	✓	✓	✓	✓	**QJ1280**
600	850	✓	✓	✓	✓	**QJ1984**
588	784	✓	✓	✓	✓	**Q1084**
600	800	✓	✓	✓	✓	**QJ1084**
500	650	✓	✓	✓	✓	**QJ1284**
600	800	✓	✓	✓	✓	**QJ1988**
539	735	✓	✓	✓	✓	**Q1088**
550	750	✓	✓	✓	✓	**QJ1088**
500	650	✓	✓	✓	✓	**QJ1288**
490	686	✓	✓	✓	✓	**Q1092**
500	700	✓	✓	✓	✓	**QJ1092**
450	600	✓	✓	✓	✓	**QJ1292**
490	637	✓	✓	✓	✓	**Q1096**
500	650	✓	✓	✓	✓	**QJ1096**
400	570	✓	✓	✓	✓	**QJ1296**

* Other products also available

https://nppnovoteh.com

3. SELF-ALIGNING RADIAL BALL BEARINGS









TABLES:

3. SELF-ALIGNING RADIAL BALL BEARINGS

3.1. Self-aligning ball bearings

INTRODUCTION:

3. Self-aligning ball bearings

3.1. Dimension series

- **10.. 12.. 13.. 14.. 22.. 23..** - cylindrical bore
- **12..K 13..K 22..K 23..K**
  - tapered bore of 1:12 taper
- **112.. 113..**
  - extended inner ring
- **115..** - bearing with special sleeve, 1:15 taper

3.2. Structure

Self-aligning ball bearings are inseparable. They have two rows of balls and a spherical track of the outer ring, what enables both rings to align to each other freely. There are self-aligning ball bearings with cylindrical or tapered bore of 1:12 taper in an open version as well as in the sealed one (2RS). 112- and 113-series possess a wide inner ring, additionally equipped with mounting cuts.

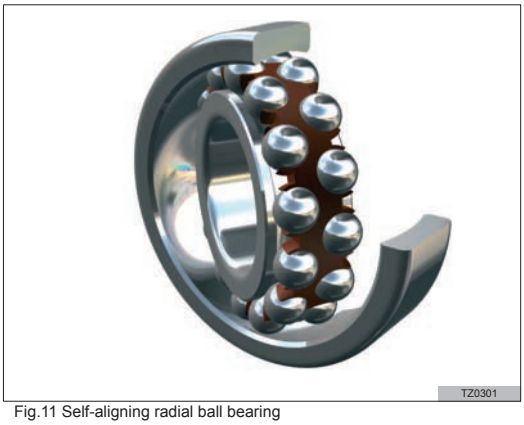

Fig.11 Self-aligning radial ball bearing

115-series is produced together with a special sleeve, whereas the taper of the tapered bore is 1:15.

3.3. Cages

Cages of self-aligning ball bearings are always guided on rolls, and made both of steel or brass and of thermoplastic material. The most common cages are stamped from steel sheet – without designation behind the bearing symbol. Thermoplastic material cages have TV, TN9, TNG designations. Solid brazen cages have M designation.

3.4. Features

Self-aligning bearings thanks to their structure have the ability to compensate misalignments, shaft deflections and deformations of bearing mountings. The principle of operation of self-aligning bearings can be compared to that of self-aligning bearings in mountings. Bearings with a cylindrical bore are mounted directly on the shaft, and their tapered-bore versions are fixed directly on tapered tenons or with the help of an adapter sleeve on cylindrical tenons. Self-aligning ball bearings with wide inner ring are fixed in the axial direction with the help of screws or pins in cuts of one side of the inner ring. At the same time the screw or the pin prevent the inner ring from turning on the shaft. Self-aligning ball bearings can deflect from the central position up to 4°, but sealed version only up to $1{,}5^0$.

3.5. Application

Specific features, relatively simple construction, easiness of mounting and dismounting are the reasons why the self-aligning bearings are applied in nearly all industry branches. They are especially recommended in applications where misalignment may increase through the shaft deflection or assembly errors. Bearings with wide inner ring are applied in ungrinded shafts in the first place.

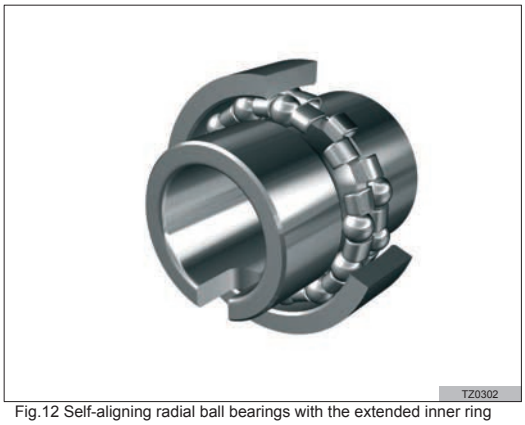

Fig.12 Self-aligning radial ball bearings with the extended inner ring

https://nppnovoteh.com

3. SELF-ALIGNING RADIAL BALL BEARINGS

3.1. Self-aligning ball bearings



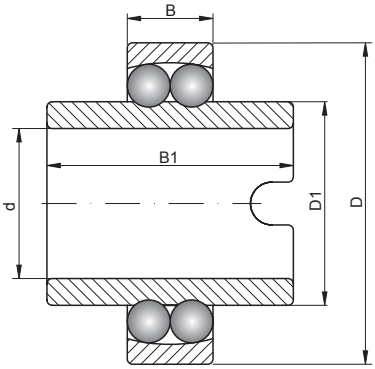

112.. 113..

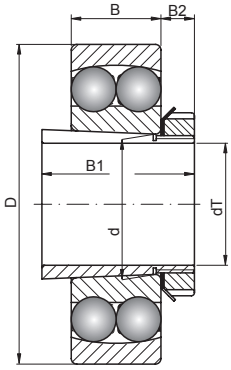

adapter sleeve

5 – 25 mm

Shaft [mm]	Bearing No.	Sleeve No.	Series		Dimensions [mm]							Weight [kg]
			SD	SB	d	dT	D	D1	B	B1	B2	
5	**135**	-	3	0	5	-	19	-	6	-	-	0,009
6	**126**	-	2	0	6	-	19	-	6	-	-	0,009
7	**127**	-	2	0	7	-	22	-	7	-	-	0,014
8	**108**	-	0	0	8	-	22	-	7	-	-	0,014
	128	-	0	0	8	-	24	-	8	-	-	0,0017
9	**129**	-	2	0	9	-	26	-	8	-	-	0,022
10	**1200**	-	2	0	10	-	30	-	9	-	-	0,034
	2200	-	2	2	10	-	30	-	14	-	-	0,047
	2200 2RS	-	2	2	10	-	30	-	14	-	-	0,053
	1300	-	3	0	10	-	35	-	11	-	-	0,058
	2300	-	3	2	10	-	35	-	17	-	-	0,083
12	**1201**	-	2	0	12	-	32	-	10	-	-	0,04
	2201	-	2	2	12	-	32	-	14	-	-	0,053
	2201 2RS	-	2	2	12	-	32	-	14	-	-	0,057
	1301	-	3	0	12	-	37	-	12	-	-	0,067
	2301	-	3	2	12	-	37	-	17	-	-	0,095
15	**1202**	-	2	0	15	-	35	-	11	-	-	0,049
	2202	-	2	2	15	-	35	-	14	-	-	0,057
	2202 2RS	-	2	2	15	-	35	-	14	-	-	0,06
	1302	-	3	0	15	-	42	-	13	-	-	0,094
	2302	-	3	2	15	-	42	-	17	-	-	0,11
	2302 2RS	-	3	2	15	-	42	-	17	-	-	0,115
17	**1203**	-	2	0	17	-	40	-	12	-	-	0,073
	2203	-	2	2	17	-	40	-	16	-	-	0,088
	2203 2RS	-	2	2	17	-	40	-	16	-	-	0,096
	1303	-	3	0	17	-	47	-	14	-	-	0,13
	1204 K	H204	2	0	20	17	47	-	14	24	7	0,12
	2204 K	H304	2	2	20	17	47	-	18	28	7	0,14
	2303	-	3	2	17	-	47	-	19	-	-	0,172
	2303 2RS	-	3	2	17	-	47	-	19	-	-	0,175
	1304 K	H304	3	0	20	17	52	-	15	28	7	0,16
	2304 K	H2304	3	2	20	17	52	-	21	31	7	0,21
20	**1204**	-	2	0	20	-	47	-	14	-	-	0,12
	2204	-	2	2	20	-	47	-	18	-	-	0,14
	2204 2RS	-	2	2	20	-	47	-	18	-	-	0,148
	11204	-	2	0	20	-	47	29,2	14	40	-	0,18
	1304	-	3	0	20	-	52	-	15	-	-	0,16
	11304	-	3	0	20	-	52	31,5	15	44	-	0,266
	1205 K	H205	2	0	25	20	52	-	15	26	8	0,14
	2205 K	H305	2	2	25	20	52	-	18	29	8	0,16
	2205 K2RS	H305	2	2	25	20	52	-	18	29	8	0,16
	2304	-	3	2	20	-	52	-	21	-	-	0,21
	2304 2RS	-	3	2	20	-	52	-	21	-	-	0,228
	1305 K	H305	3	0	25	20	62	-	17	29	8	0,26
	2305 K	H2305	3	2	25	20	62	-	24	35	8	0,34
25	**1205**	-	2	0	25	-	52	-	15	-	-	0,14
	2205	-	2	2	25	-	52	-	18	-	-	0,16

- warehouse - order - phone

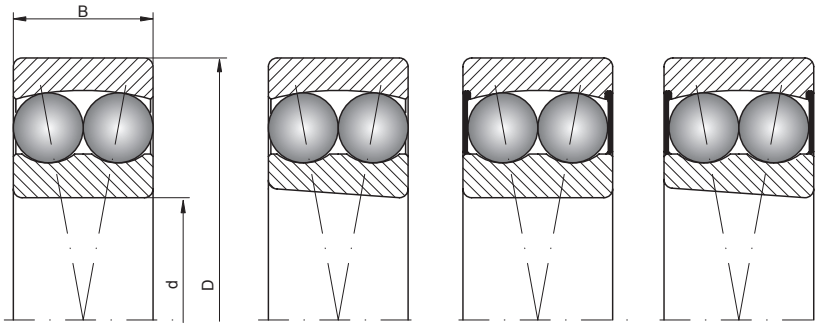

10.. 12.. 13..
14.. 22.. 23..

12.. K 13.. K
22.. K 23.. K

12.. 2RS

12.. K2RS

Basic load ratings [kN]		Limiting speed [rpm]		Basic makes*					Bearing No.
dyn. C	stat. C_0	grease	oil	-	M	TV	C3	P5	
2,51	0,48	45000	63000						**135**
2,51	0,48	45000	70000						**126**
2,65	0,56	30000	36000						**127**
2,65	0,56	40000	60000						**108**
3,2	0,73	28000	34000						**128**
3,9	0,815	26000	32000						**129**
5,53	1,18	24000	30000						**1200**
8,06	1,73	22000	28000						**2200**
8,06	1,73	17000	-						**2200 2RS**
7,25	1,62	18000	21000						**1300**
10,1	2,15	17000	20000						**2300**
6,24	1,43	22000	28000						**1201**
8,52	1,9	20000	26000						**2201**
8,52	1,9	16000	-						**2201 2RS**
9,36	2,16	18000	22000						**1301**
11,7	2,7	17000	20000						**2301**
7,41	1,76	19000	24000						**1202**
8,71	2,04	18000	22000						**2202**
8,71	2,04	14000	-						**2202 2RS**
10,8	2,6	17000	20000						**1302**
11,9	2,9	15000	18000						**2302**
11,9	2,9	12000	-						**2302 2RS**
8,84	2,2	18000	22000						**1203**
10,6	2,55	17000	20000						**2203**
10,6	2,55	12000	-						**2203 2RS**
12,7	3,4	14000	17000						**1303**
127	3,4	15000	18000						**1204 K**
16,8	4,15	14000	17000						**2204 K**
14,6	3,55	13000	16000						**2303**
14,6	3,55	11000	-						**2303 2RS**
14,3	4	12000	15000						**1304 K**
18,2	4,75	11000	14000						**2304 K**
12,7	3,4	15000	18000						**1204**
16,8	4,15	14000	17000						**2204**
16,8	4,15	10000	-						**2204 2RS**
12,7	3,4	14000	17000						**11204**
14,3	4	12000	15000						**1304**
12,4	3,35	13000	15000						**11304**
14,3	4	13000	16000						**1205 K**
16,8	4,4	11000	14000						**2205 K**
16,8	4,4	9000	-						**2205 K2RS**
18,2	4,75	11000	14000						**2304**
18,2	4,75	10000	-						**2304 2RS**
19	5,4	9500	120000						**1305 K**
24,2	6,55	9500	12000						**2305 K**
14,3	4	13000	16000						**1205**
16,8	4,4	11000	14000						**2205**

* Other products also available

https://nppnovoteh.com

3. SELF-ALIGNING RADIAL BALL BEARINGS

3.1. Self-aligning ball bearings



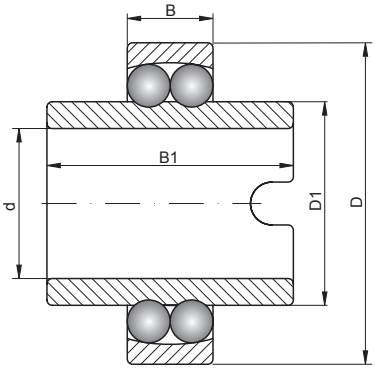

112.. 113..

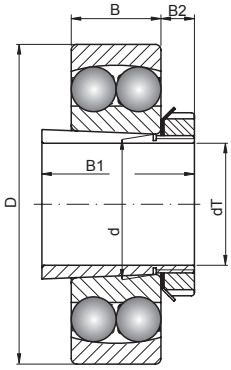

adapter sleeve

25 – 40 mm

Shaft [mm]	Bearing No.	Sleeve No.	Series		Dimensions [mm]							Weight [kg]
			SD	SB	d	dT	D	D1	B	B1	B2	
25 cont.	**2205 2RS**	-	2	2	25	-	52	-	18	-	-	0,162
	11205	-	2	0	25	-	52	33,3	15	44	-	0,22
	1206 K	H206	2	0	30	25	62	-	16	27	8	0,22
	1305	-	3	0	25	-	62	-	17	-	-	0,26
	11305	-	3	0	25	-	62	38	17	48	-	0,445
	2206 K	H306	2	2	30	25	62	-	20	31	8	0,26
	2206 K2RS	H306	2	2	30	25	62	-	20	31	8	0,266
	2305	-	3	2	25	-	62	-	24	-	-	0,34
	2305 2RS	-	3	2	25	-	62	-	24	-	-	0,361
	1306 K	H306	3	0	30	25	72	-	19	31	8	0,39
	2306 K	H2306	3	2	30	25	72	-	27	38	8	0,5
30	**1206**	-	2	0	30	-	62	-	16	-	-	0,22
	2206	-	2	2	30	-	62	-	20	-	-	0,252
	2206 2RS	-	2	2	30	-	62	-	20	-	-	0,268
	11206	-	2	0	30	-	62	40,1	16	48	-	0,35
	1207 K	H207	2	0	35	30	72	-	17	29	9	0,32
	1306	-	3	0	30	-	72	-	19	-	-	0,39
	11306	-	3	0	30	-	72	45	19	52	-	0,614
	2207 K	H307	2	2	35	30	72	-	23	35	9	0,4
	2207 K2RS	H307	2	2	35	30	72	-	23	35	9	0,43
	2306	-	3	2	30	-	72	-	27	-	-	0,5
	2306 2RS	-	3	2	30	-	72	-	27	-	-	0,542
	1307 K	H307	3	0	35	30	80	-	21	35	9	0,51
	2307 K	H2307	3	2	35	30	80	-	31	43	9	0,68
	1406	-	4	0	30	-	90	-	28	-	-	1
35	**1207**	-	2	0	35	-	72	-	17	-	-	0,32
	2207	-	2	2	35	-	72	-	23	-	-	0,404
	2207 2RS	-	2	2	35	-	72	-	23	-	-	0,434
	11207	-	2	0	35	-	72	47,7	17	52	-	0,54
	1208 K	H208	2	0	40	35	80	-	18	31	10	0,42
	1307	-	3	0	35	-	80	-	21	-	-	0,51
	11307	-	3	0	35	-	80	51,7	21	56	-	0,821
	2208 K	H308	2	2	40	35	80	-	23	36	10	0,51
	2208 K2RS	H308	2	2	40	35	80	-	23	36	10	0,528
	2307	-	3	2	35	-	80	-	31	-	-	0,68
	2307 2RS	-	3	2	35	-	80	-	31	-	-	0,731
	1308 K	H308	3	0	40	35	90	-	23	36	10	0,72
	2308 K	H2308	3	2	40	35	90	-	33	46	10	0,93
	1407	-	4	0	35	-	100	-	30	-	-	1,3
40	**1208**	-	2	0	40	-	80	-	18	-	-	0,42
	2208	-	2	2	40	-	80	-	23	-	-	0,51
	2208 2RS	-	2	2	40	-	80	-	23	-	-	0,528
	11208	-	2	0	40	-	80	54	18	56	-	0,72
	1209 K	H209	2	0	45	40	85	-	19	33	11	0,47
	2209 K	H309	2	2	45	40	85	-	23	39	11	0,527
	2209 K2RS	H309	2	2	45	40	85	-	23	39	11	0,548
	1308	-	3	0	40	-	90	-	23	-	-	0,72
	11308	-	3	0	40	-	90	57,7	23	58	-	1,09
	2308	-	3	2	40	-	90	-	33	-	-	0,93
	2308 2RS	-	3	2	40	-	90	-	33	-	-	1,01
	1309 K	H309	3	0	45	40	100	-	25	39	11	0,96
	2309 K	H2309	3	2	45	40	100	-	36	50	11	1,25
	1408	-	4	0	40	-	110	-	33	-	-	1,7

- warehouse - order - phone

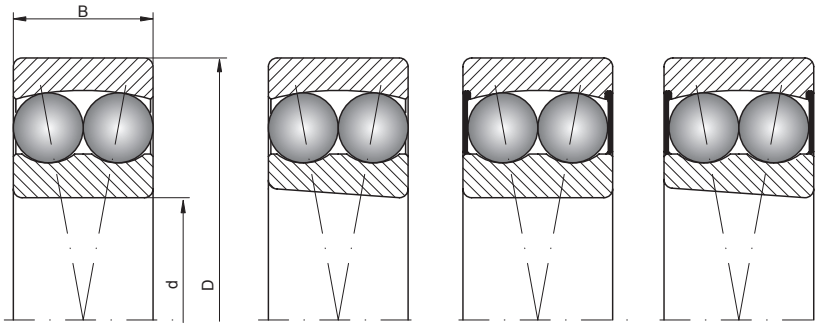

10.. 12.. 13..
14.. 22.. 23..

12.. K 13.. K
22.. K 23.. K

12.. 2RS

12.. K2RS

Basic load ratings [kN]		Limiting speed [rpm]		Basic makes*					Bearing No.
dyn. C	stat. C_0	grease	oil	-	M	TV	C3	P5	
16,8	4,4	9000	-	●	●	○	○	●	**2205 2RS**
14,3	4	8000	-	○	●	●	○	●	**11205**
15,6	4,65	10000	13000	●	●	○	○	●	**1206 K**
19	5,4	9500	120000	●	●	○	○	●	**1305**
17,6	4,95	9900	12000	○	●	●	○	●	**11305**
23,8	6,7	9500	12000	●	●	○	○	●	**2206 K**
23,8	6,7	8000	-	●	●	○	○	●	**2206 K2RS**
24,2	6,55	9500	12000	●	●	○	○	●	**2305**
24,2	6,55	7500	-	●	●	○	○	●	**2305 2RS**
22,5	6,8	9000	11000	●	●	○	○	●	**1306 K**
31,2	8,8	8500	10000	●	●	○	○	●	**2306 K**
15,6	4,65	10000	13000	●	●	○	○	●	**1206**
23,8	6,7	9500	12000	●	●	○	○	●	**2206**
23,8	6,7	7500	-	●	●	○	○	●	**2206 2RS**
15,6	4,65	9900	12000	○	●	●	○	●	**11206**
19	6	9000	11000	●	●	○	○	●	**1207 K**
22,5	6,8	9000	11000	●	●	○	○	●	**1306**
21,3	6,3	8700	11000	○	●	●	○	●	**11306**
30,7	8,8	8500	10000	●	●	○	○	●	**2207 K**
30,7	8,8	7000	-	●	●	○	○	●	**2207 K2RS**
31,2	8,8	8500	10000	●	●	○	○	●	**2306**
31,2	8,8	6700	-	●	●	○	○	●	**2306 2RS**
26,5	8,5	7500	9000	●	●	○	○	●	**1307 K**
39,7	11,2	7000	8500	●	●	○	○	●	**2307 K**
59,2	17	6700	8000	○	●	●	○	●	**1406**
19	6	9000	11000	●	●	○	○	●	**1207**
30,7	8,8	8500	10000	●	●	○	○	●	**2207**
30,7	8,8	7000	-	●	●	○	○	●	**2207 2RS**
15,9	5,1	5600	-	○	●	●	○	●	**11207**
19,9	6,95	8500	10000	●	●	○	○	●	**1208 K**
26,5	8,5	7500	9000	●	●	○	○	●	**1307**
25,1	7,85	7600	9300	○	●	●	○	●	**11307**
31,9	10	7500	9000	●	●	○	○	●	**2208 K**
31,9	10	6300	-	●	●	○	○	●	**2208 K2RS**
39,7	11,2	7000	8500	●	●	○	○	●	**2307**
39,7	11,2	5600	-	●	●	○	○	●	**2307 2RS**
33,8	11,2	6700	8000	●	●	○	○	●	**1308 K**
54	16	6300	7500	●	●	○	○	●	**2308 K**
62,4	18	6300	7500	○	●	●	○	●	**1407**
19,9	6,95	8500	10000	●	●	○	○	●	**1208**
31,9	10	7500	9000	●	●	○	○	●	**2208**
31,9	10	5600	-	●	●	○	○	●	**2208 2RS**
19	6,55	5000	-	○	●	●	○	●	**11208**
22,9	7,8	7500	9000	●	●	○	○	●	**1209 K**
32,5	10,6	7000	8500	●	●	○	○	●	**2209 K**
32,5	10,6	5300	-	●	●	○	○	●	**2209 K2RS**
33,8	11,2	6700	8000	●	●	○	○	●	**1308**
29,5	9,7	6900	8400	○	●	●	○	●	**11308**
54	16	6300	7500	●	●	○	○	●	**2308**
54	16	5300	-	●	●	○	○	●	**2308 2RS**
39	13,4	6300	7500	●	●	○	○	●	**1309 K**
63,7	19,3	5600	6700	●	●	○	○	●	**2309 K**
76,1	23,6	5300	6300	○	●	●	○	●	**1408**

* Other products also available

https://nppnovoteh.com

3. SELF-ALIGNING RADIAL BALL BEARINGS

3.1. Self-aligning ball bearings



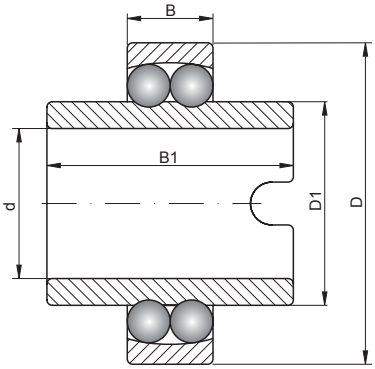

112.. 113..

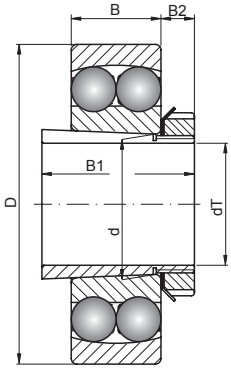

adapter sleeve

45 – 60 mm

Shaft [mm]	Bearing No.	Sleeve No.	Series		Dimensions [mm]							Weight [kg]
			SD	SB	d	dT	D	D1	B	B1	B2	
45	**1209**	-	2	0	45	-	85	-	19	-	-	0,47
	2209	-	2	2	45	-	85	-	23	-	-	0,527
	2209 2RS	-	2	2	45	-	85	-	23	-	-	0,548
	11209	-	2	0	45	-	85	57,7	19	58	-	0,77
	1210 K	H210	2	0	50	45	90	-	20	35	12	0,53
	2210 K	H310	2	2	50	45	90	-	23	42	12	0,6
	2210 K2RS	H310	2	2	50	45	90	-	23	42	12	0,606
	1309	-	3	0	45	-	100	-	25	-	-	0,96
	11309	-	3	0	45	-	100	63,9	25	60	-	1,4
	2309	-	3	2	45	-	100	-	36	-	-	1,25
	2309 2RS	-	3	2	45	-	100	-	36	-	-	1,34
	1310 K	H310	3	0	50	45	110	-	27	42	12	1,2
	2310 K	H2310	3	2	50	45	110	-	40	55	12	1,65
	1409	-	4	0	45	-	120	-	35	-	-	2,15
50	**1210**	-	2	0	50	-	90	-	20	-	-	0,53
	11210	-	2	0	50	-	90	62,7	20	58	-	0,85
	2210	-	2	2	50	-	90	-	23	-	-	0,6
	2210 2RS	-	2	2	50	-	90	-	23	-	-	0,606
	1211 K	H211	2	0	55	50	100	-	21	37	12,5	0,71
	2211 K	H311	2	2	55	50	100	-	25	45	12,5	0,763
	2211 K2RS	H311	2	2	55	50	100	-	25	45	12,5	0,796
	1310	-	3	0	50	-	110	-	27	-	-	1,2
	11310	-	3	0	50	-	110	70,3	27	62	-	1,74
	2310	-	3	2	50	-	110	-	40	-	-	1,65
	2310 2RS	-	3	2	50	-	110	-	40	-	-	1,78
	1311 K	H311	3	0	55	50	120	-	29	45	12,5	1,6
	2311 K	H2311	3	2	55	50	120	-	43	59	12,5	2,1
	1410	-	4	0	50	-	130	-	37	-	-	2,65
55	**1211**	-	2	0	55	-	100	-	21	-	-	0,71
	11211	-	2	0	55	-	100	70,3	21	60	-	1,16
	2211	-	2	2	55	-	100	-	25	-	-	0,763
	2211 2RS	-	2	2	55	-	100	-	25	-	-	0,796
	1212 K	H212	2	0	60	55	110	-	22	38	13	0,9
	2212 K	H312	2	2	60	55	110	-	28	47	13	1,1
	1311	-	3	0	55	-	120	-	29	-	-	1,6
	2311	-	3	2	55	-	120	-	43	-	-	2,1
	1312 K	H312	3	0	60	55	130	-	31	47	13	1,95
	2312 K	H2312	3	2	60	55	130	-	46	62	13	2,6
	1411	-	4	0	55	-	140	-	40	-	-	3,25
60	**1212**	-	2	0	60	-	110	-	22	-	-	0,9
	11212	-	2	0	60	-	110	78	22	62	-	1,52
	2212	-	2	2	60	-	110	-	28	-	-	1,1
	2212 2RS	-	2	2	60	-	110	-	28	-	-	1,13
	1213 K	H213	2	0	65	60	120	-	23	40	14	1,15
	2213 K	H313	2	2	65	60	120	-	31	50	14	1,45
	1214 K	H214	2	0	70	60	125	-	24	41	14	1,25
	2214 K	H314	2	2	70	60	125	-	31	52	14	1,5
	1312	-	3	0	60	-	130	-	31	-	-	1,95
	2312	-	3	2	60	-	130	-	46	-	-	2,6
	1313 K	H313	3	0	65	60	140	-	33	50	14	2,45
	2313 K	H2313	3	2	65	60	140	-	48	65	14	3,25
	1314 K	H314	3	0	70	60	150	-	35	52	14	3
	1412	-	4	0	60	-	150	-	42	-	-	3,95

- warehouse - order - phone

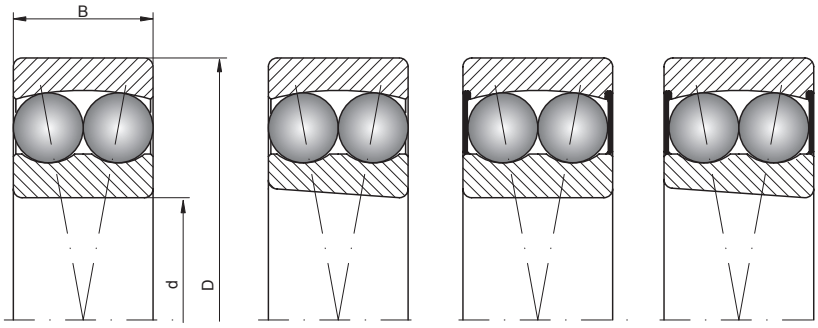

10.. 12.. 13..
14.. 22.. 23..

12.. K 13.. K
22.. K 23.. K

12.. 2RS

12.. K2RS

Basic load ratings [kN]		Limiting speed [rpm]		Basic makes*					Bearing No.
dyn. C	stat. C_0	grease	oil	-	M	TV	C3	P5	
22,9	7,8	7500	9000	●	●	○	○	●	**1209**
32,5	10,6	7000	8500	●	●	○	○	●	**2209**
32,5	10,6	5300	-	●	●	○	○	●	**2209 2RS**
21,6	7,35	4500	-	○	●	●	○	●	**11209**
26,5	9,15	7000	8500	●	●	○	○	●	**1210 K**
33,8	11,2	6300	7500	●	●	○	○	●	**2210 K**
33,8	11,2	4800	-	●	●	○	○	●	**2210 K2RS**
39	13,4	6300	7500	●	●	○	○	●	**1309**
38,1	12,7	6100	7500	○	●	●	○	●	**11309**
63,7	19,3	5600	6700	●	●	○	○	●	**2309**
63,7	19,3	4800	-	●	●	○	○	●	**2309 2RS**
43,6	14	5600	6700	●	●	○	○	●	**1310 K**
63,7	20	5300	6300	●	●	○	○	●	**2310 K**
88,4	27,5	5000	6000	○	●	●	○	●	**1409**
26,5	9,15	7000	8500	●	●	○	○	●	**1210**
22,9	8,15	4300	-	○	●	●	○	●	**11210**
33,8	11,2	6300	7500	●	●	○	○	●	**2210**
33,8	11,2	4800	-	●	●	○	○	●	**2210 2RS**
27,6	10,6	6300	7500	●	○	●	○	●	**1211 K**
39	13,4	6000	7000	●	○	●	○	●	**2211 K**
39	13,4	4300	-	●	○	●	○	●	**2211 K2RS**
43,6	14	5600	6700	●	●	○	○	●	**1310**
43,4	14,1	5600	6800	○	●	●	○	●	**11310**
63,7	20	5300	6300	●	●	○	○	●	**2310**
63,7	20	4300	-	●	●	○	○	●	**2310 2RS**
50,7	18	5000	6000	●	○	●	○	●	**1311 K**
76,1	24	4800	5600	●	○	●	○	●	**2311 K**
101	32	4800	5600	○	●	●	○	●	**1410**
27,6	10,6	6300	7500	●	○	●	○	●	**1211**
26,8	10	5800	7100	○	●	●	○	●	**11211**
39	13,4	6000	7000	●	○	●	○	●	**2211**
39	13,4	4300	-	●	○	●	○	●	**2211 2RS**
31,2	12,2	5600	6700	●	○	●	○	●	**1212 K**
48,8	17	5300	6300	●	○	●	○	●	**2212 K**
50,7	18	5000	6000	●	○	●	○	●	**1311**
76,1	24	4800	5600	●	○	●	○	●	**2311**
58,5	22	4500	5300	●	○	●	○	●	**1312 K**
87,1	28,5	4500	5300	●	○	●	○	●	**2312 K**
111	36,5	4300	5000	○	●	●	○	●	**1411**
31,2	12,2	5600	6700	●	○	●	○	●	**1212**
30,2	11,6	3400	-	○	●	●	○	●	**11212**
48,8	17	5300	6300	●	○	●	○	●	**2212**
48,8	17	3800	-	●	○	●	○	●	**2212 2RS**
35,1	14	5300	6300	●	○	●	○	●	**1213 K**
57,2	20	5000	6000	●	○	●	○	●	**2213 K**
34,5	13,7	5000	6000	●	○	●	○	●	**1214 K**
44,2	17	4800	5600	●	○	●	○	●	**2214 K**
58,5	22	4500	5300	●	○	●	○	●	**1312**
87,1	28,5	4500	5300	●	○	●	○	●	**2312**
65	25,5	4300	5000	●	○	●	○	●	**1313 K**
95,6	32,5	4000	4800	●	○	●	○	●	**2313 K**
74,1	27,5	4000	4800	●	○	●	○	●	**1314 K**
125	41,5	3800	4500	○	●	●	○	●	**1412**

* Other products also available

https://nppnovoteh.com

3. SELF-ALIGNING RADIAL BALL BEARINGS

3.1. Self-aligning ball bearings



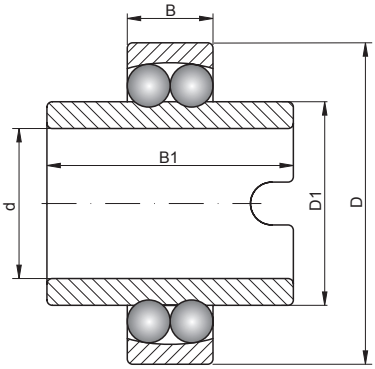

112.. 113..

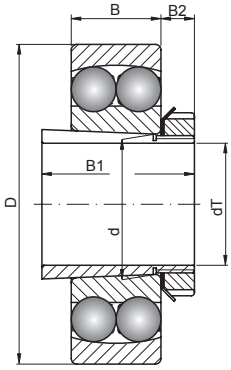

adapter sleeve

60 – 90 mm

Shaft [mm]	Bearing No.	Sleeve No.	Series		Dimensions [mm]							Weight [kg]
			SD	SB	d	dT	D	D1	B	B1	B2	
60 cont.	**2314 K**	H2314	3	2	70	60	150	-	51	68	14	3,9
65	**1213**	-	2	0	65	-	120	-	23	-	-	1,15
	2213	-	2	2	65	-	120	-	31	-	-	1,45
	2213 2RS	-	2	2	65	-	120	-	31	-	-	1,53
	1215 K	H215	2	0	75	65	130	-	25	43	15	1,35
	2215 K	H315	2	2	75	65	130	-	31	55	15	1,6
	1313	-	3	0	65	-	140	-	33	-	-	2,44
	2313	-	3	2	65	-	140	-	48	-	-	3,25
	1315 K	H315	3	0	75	65	160	-	37	55	15	3,55
	2315 K	H2315	3	2	75	65	160	-	55	73	15	4,7
70	**1214**	-	2	0	70	-	125	-	24	-	-	1,25
	2214	-	2	2	70	-	125	-	31	-	-	1,5
	2214 2RS	-	2	2	70	-	125	-	31	-	-	1,59
	1216 K	H216	2	0	80	70	140	-	26	46	17	1,65
	2216 K	H316	2	2	80	70	140	-	33	59	17	2
	1314	-	3	0	70	-	150	-	35	-	-	3
	2314	-	3	2	70	-	150	-	51	-	-	3,9
	1316 K	H316	3	0	80	70	170	-	39	59	17	4,2
	2316 K	H2316	3	2	80	70	170	-	58	78	17	6,1
75	**1215**	-	2	0	75	-	130	-	25	-	-	1,35
	2215	-	2	2	75	-	130	-	31	-	-	1,6
	1217 K	H217	2	0	85	75	150	-	28	50	18	2,05
	2217 K	H317	2	2	85	75	150	-	36	63	18	2,5
	1315	-	3	0	75	-	160	-	37	-	-	3,55
	2315	-	3	2	75	-	160	-	55	-	-	4,7
	1317 K	H317	3	0	85	75	180	-	41	63	18	5
	2317 K	H2317	3	2	85	75	180	-	60	82	18	7,05
80	**1216**	-	2	0	80	-	140	-	26	-	-	1,65
	2216	-	2	2	80	-	140	-	33	-	-	2
	1218 K	H218	2	0	90	80	160	-	30	52	18	2,5
	2218 K	H318	2	2	90	80	160	-	40	65	18	3,4
	1316	-	3	0	80	-	170	-	39	-	-	4,2
	2316	-	3	2	80	-	170	-	58	-	-	6,1
	1318 K	H318	3	0	90	80	190	-	43	65	18	5,8
	2318 K	H2318	3	2	90	80	190	-	64	86	18	8,45
85	**1217**	-	2	0	85	-	150	-	28	-	-	2,05
	2217	-	2	2	85	-	150	-	36	-	-	2,5
	1219 K	H219	2	0	95	85	170	-	32	55	19	3,1
	2219 K	H319	2	2	95	85	170	-	43	68	19	4,1
	1317	-	3	0	85	-	180	-	41	-	-	5
	2317	-	3	2	85	-	180	-	60	-	-	7,05
	1319 K	H319	3	0	95	85	200	-	45	68	19	6,7
	2319 K	H2319	3	2	95	85	200	-	67	90	19	9,8
90	**1218**	-	2	0	90	-	160	-	30	-	-	2,5
	2218	-	2	2	90	-	160	-	40	-	-	3,4
	1220 K	H220	2	0	100	90	180	-	34	58	20	3,7
	2220 K	H320	2	2	100	90	180	-	46	71	20	5
	1318	-	3	0	90	-	190	-	43	-	-	5,8
	2318	-	3	2	90	-	190	-	64	-	-	8,45
	1320 K	H320	3	0	100	90	215	-	47	71	20	8,3

- warehouse - order - phone

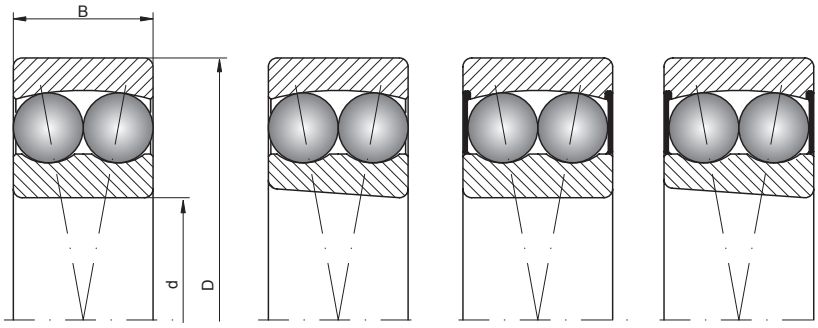

10.. 12.. 13..
14.. 22.. 23..

12.. K 13.. K
22.. K 23.. K

12.. 2RS

12.. K2RS

Basic load ratings [kN]		Limiting speed [rpm]		Basic makes*					Bearing No.
dyn. C	stat. C_0	grease	oil	-	M	TV	C3	P5	
111	37,5	3800	4500						**2314 K**
35,1	14	5300	6300						**1213**
57,2	20	5000	6000						**2213**
57,2	20	3600	-						**2213 2RS**
39	15,6	4800	5600						**1215 K**
44,2	18	4500	5300						**2215 K**
65	25,5	4300	5000						**1313**
95,6	32,5	4000	4800						**2313**
79,3	30	3800	4500						**1315 K**
124	43	3400	4000						**2315 K**
34,5	13,7	5000	6000						**1214**
44,2	17	4800	5600						**2214**
44,2	17	3800	-						**2214 2RS**
39,7	1,7	4500	5300						**1216 K**
65	25,5	4000	4800						**2216 K**
74,1	27,5	4000	4800						**1314**
111	37,5	3800	4500						**2314**
88,4	33,5	3600	4300						**1316 K**
135	49	3200	3800						**2316 K**
39	15,6	4800	5600						**1215**
44,2	18	4500	5300						**2215**
48,8	20,8	4000	4800						**1217 K**
58,5	23,6	3800	4500						**2217 K**
79,3	30	3800	4500						**1315**
124	43	3400	4000						**2315**
97,5	38	3400	4000						**1317 K**
140	51	3000	3600						**2317 K**
39,7	1,7	4500	5300						**1216**
65	25,5	4000	4800						**2216**
57,2	23,6	3800	4500						**1218 K**
70,2	28,5	3600	4300						**2218 K**
88,4	33,5	3600	4300						**1316**
135	49	3200	3800						**2316**
117	44	3200	3800						**1318 K**
153	57	2800	3400						**2318 K**
48,8	20,8	4000	4800						**1217**
58,5	23,6	3800	4500						**2217**
63,7	27	3600	4300						**1219 K**
83,2	34,5	3400	4000						**2219 K**
97,5	38	3400	4000						**1317**
140	51	3000	3600						**2317**
133	51	3000	3600						**1319 K**
165	64	2600	3200						**2319 K**
57,2	23,6	3800	4500						**1218**
70,2	28,5	3600	4300						**2218**
68,9	30	3400	4000						**1220 K**
97,5	40,5	3200	3800						**2220 K**
117	44	3200	3800						**1318**
153	57	2800	3400						**2318**
143	57	2800	3400						**1320 K**

* Other products also available

https://nppnovoteh.com

3. SELF-ALIGNING RADIAL BALL BEARINGS

3.1. Self-aligning ball bearings



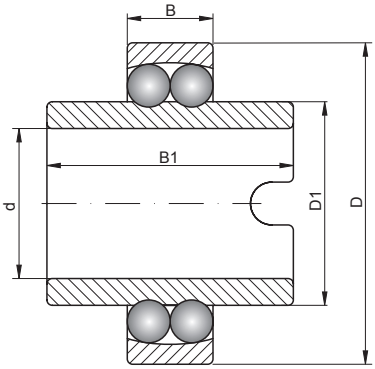

112.. 113..

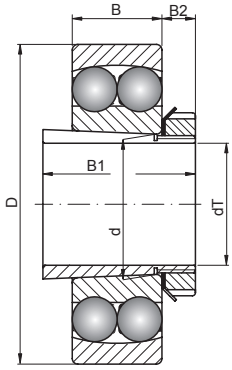

adapter sleeve

90 – 130 mm

Shaft [mm]	Bearing No.	Sleeve No.	Series		Dimensions [mm]							Weight [kg]
			SD	SB	d	dT	D	D1	B	B1	B2	
90 cont.	**2320 K**	H2320	3	2	100	90	215	-	73	97	20	12,5
95	**1219**	-	2	0	95	-	170	-	32	-	-	3,1
	2219	-	2	2	95	-	170	-	43	-	-	4,1
	1221 K	H221	2	0	105	95	190	-	36	60	20	4,35
	2221 K	H321	2	2	105	95	190	-	50	74	20	6,1
	1222 K	H221	2	0	110	95	200	-	38	60	20	5,15
	1319	-	3	0	95	-	200	-	45	-	-	6,7
	2319	-	3	2	95	-	200	-	67	-	-	9,8
	1321 K	H321	3	0	105	95	225	-	49	74	20	10
	2321 K	H2321	3	2	105	95	225	-	77	101	20	14,3
100	**1220**	-	2	0	100	-	180	-	34	-	-	3,7
	2220	-	2	2	100	-	180	-	46	-	-	5
	2222 K	H322	2	2	110	100	200	-	53	77	21	7,1
	1320	-	3	0	100	-	215	-	47	-	-	8,3
	2320	-	3	2	100	-	215	-	73	-	-	12,5
	1322 K	H322	3	0	110	100	240	-	50	77	21	12
	2322 K	H2322	3	2	110	100	240	-	80	105	21	17,5
105	**1221**	-	2	0	105	-	190	-	36	-	-	4,35
	2221	-	2	2	105	-	190	-	50	-	-	6,1
	1321	-	3	0	105	-	225	-	49	-	-	10
	2321	-	3	2	105	-	225	-	77	-	-	14,3
110	**1222**	-	2	0	110	-	200	-	38	-	-	5,15
	2222	-	2	2	110	-	200	-	53	-	-	7,1
	1224 K	H3024	2	0	120	110	215	-	42	72	22	6,75
	1322	-	3	0	110	-	240	-	50	-	-	12
	2322	-	3	2	110	-	240	-	80	-	-	17,5
120	**1224**	-	2	0	120	-	215	-	42	-	-	6,75
130	**1226**	-	2	0	130	-	230	-	46	-	-	8,3

- warehouse - order - phone

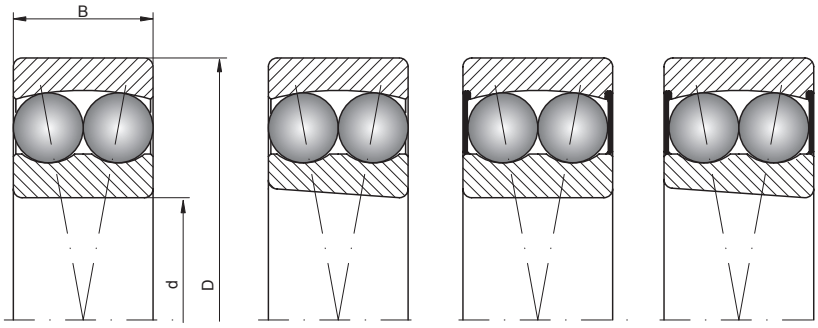

10.. 12.. 13..
14.. 22.. 23..

12.. K 13.. K
22.. K 23.. K

12.. 2RS

12.. K2RS

Basic load ratings [kN]		Limiting speed [rpm]		Basic makes*					Bearing No.
dyn. C	stat. C_0	grease	oil	-	M	TV	C3	P5	
190	80	2400	3000	●	◴	●	◴	●	**2320 K**
63,7	27	3600	4300	●	◴	●	◴	●	**1219**
83,2	34,5	3400	4000	●	◴	●	◴	●	**2219**
88	38	3200	3800	●	◴	●	◴	●	**1221 K**
108	45	3000	3600	●	◴	●	◴	●	**2221 K**
88,4	39	3000	3600	●	◴	●	◴	●	**1222 K**
133	51	3000	3600	●	◴	●	◴	●	**1319**
165	64	2600	3200	●	◴	●	◴	●	**2319**
149	60,2	2600	3200	●	◴	●	◴	●	**1321 K**
187	78	2300	3200	●	◴	●	◴	●	**2321 K**
68,9	30	3400	4000	●	◴	●	◴	●	**1220**
97,5	40,5	3200	3800	●	◴	●	◴	●	**2220**
124	52	2800	3400	●	◴	●	◴	●	**2222 K**
143	57	2800	3400	●	◴	●	◴	●	**1320**
190	80	2400	3000	●	◴	●	◴	●	**2320**
163	72	2400	3000	●	◴	●	◴	●	**1322 K**
216	95	2200	2800	●	◴	●	◴	●	**2322 K**
74,1	32,5	2900	3600	●	◴	●	◴	●	**1221**
108	45	3000	3600	●	◴	●	◴	●	**2221**
149	60,2	2600	3200	●	◴	●	◴	●	**1321**
187	78	2300	3200	●	◴	●	◴	●	**2321**
88,4	39	3000	3600	●	◴	●	◴	●	**1222**
124	52	2800	3400	●	◴	●	◴	●	**2222**
119	53	2800	3400	●	◴	●	◴	●	**1224 K**
163	72	2400	3000	●	◴	●	◴	●	**1322**
216	95	2200	2800	●	◴	●	◴	●	**2322**
119	53	2800	3400	●	◴	●	◴	●	**1224**
127	58,5	2600	3200	●	◴	●	◴	●	**1226**

* Other products also available

https://nppnovoteh.com

4. TAPERED ROLLER BEARINGS

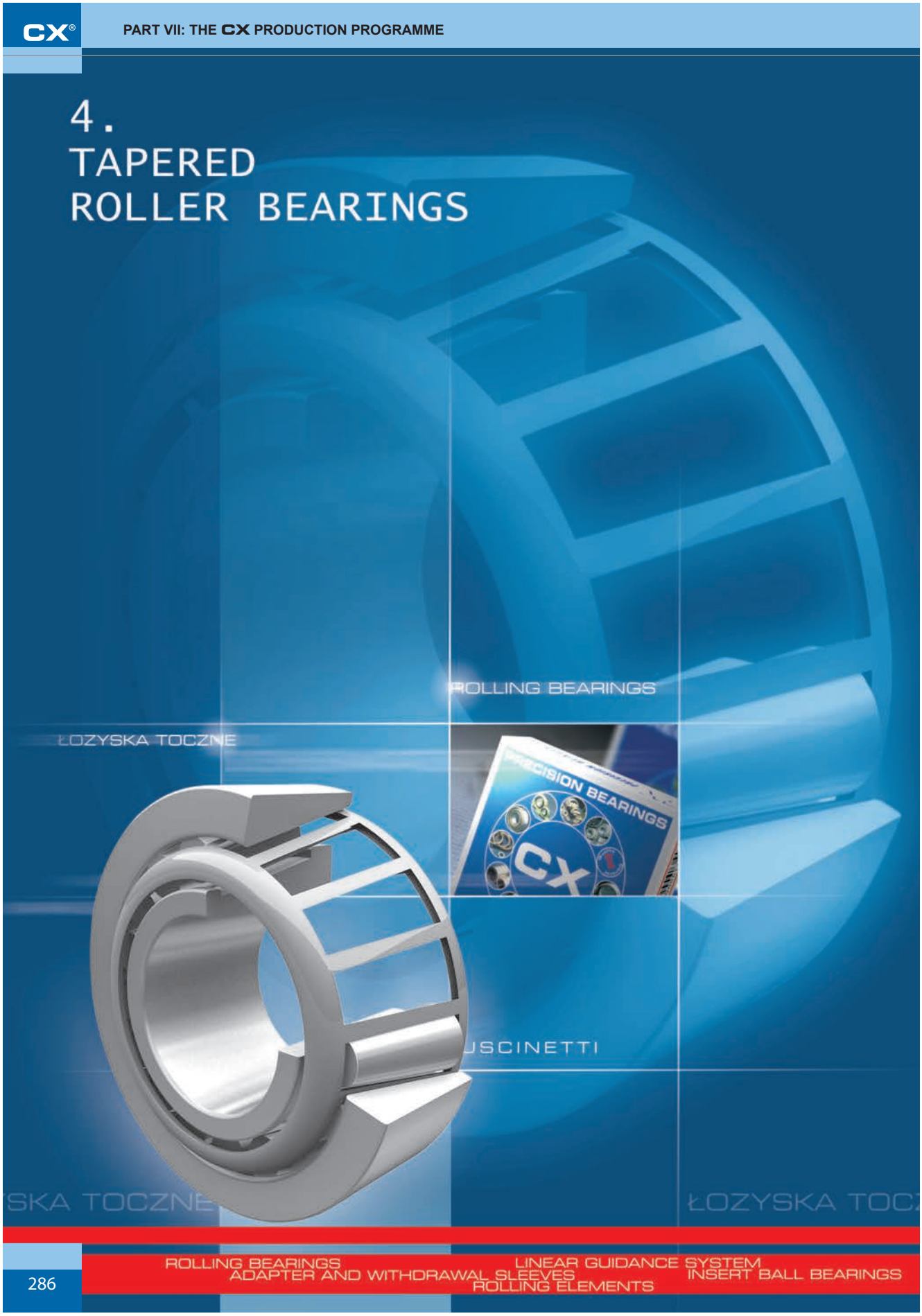

https://nppnovoteh.com

TABLES:

4.	**TAPERED ROLLER BEARINGS**
4.1.	**Tapered roller bearings – metric dimensions**
4.2	**Tapered roller bearings – inch dimensions**
4.3	**Tapered roller bearings – inch dimensions, auxiliary table for data retrieval according to index**

INTRODUCTION:

4. Single-row tapered roller bearings

4.1. Structure

Tapered roller bearings consist of two inseparable elements: the outer ring, which contains one of the oblique bearing tracks (the outer track) and the inner ring, on the track of which the cage with rolling elements is mounted. Rolling elements in this type of bearing are shaped as cones with truncated vertices. Judging by their appearance they resemble rollers or rolls, for that reason they are commonly called roll bearings or roller bearings. Under normal operation conditions the inner ring, the outer ring and rollers carry the load, whereas the cage separates and holds the rollers.

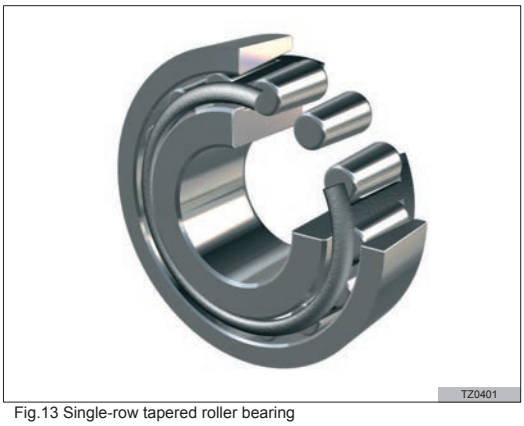

Fig.13 Single-row tapered roller bearing

The inner ring with rollers is often called the inner sub-assembly. Separable design of tapered roller bearings has different advantages during assembly and handling of the bearing. Rolling elements in the tapered roller bearing operate on tracks oblique to the bearing axes. The projection lines of all the tapered surfaces meet at a common point on the bearing axis, what ensures proper rotation of rollers on the tracks.

4.2. Features

Because of tapered tracks the tapered bearing is able to carry all combinations of radial and axial loads. The larger the angle of the outer track the bigger the ratio of the axial load carrying capacity to the radial load carrying capacity of the bearing. The long contact line of the roller with the track allows the tapered roller bearing to carry heavy loads. The tapered roller bearings combine the features of angular-contact radial ball bearings with those of the cylindrical or thrust roller bearings. They can be neither counted among the radial bearings nor among the thrust bearings, because they can operate both as radial and as thrust bearings. The characteristic feature of tapered bearings is their ability to carry axial loads in one direction. For that reason this type of bearings is often assembled in pairs or larger units, as in case of the single-row angular-contact ball bearings. The unit names are similar to the names of units that consist of angular-contact bearings (open, closed, tandem system).
Looking at the structure of the tapered bearing, one can quickly realize that the track angle plays the decisive role in the fact if the bearing is going to carry higher rotational speed or the heavier axial load. The track angles are characteristic for a given dimension series, both according to ISO standards and the AFBMA norms.

4.3. Designation systems of tapered roller bearings

Designations of single-row tapered roller bearings are standardized all over the world, but different designations systems are used for defining tapered bearings with metric and inch dimensions. Generally the bearings with inch dimensions have separate designations for the inner sub-assembly and the outer ring, whereas in case of metric series the ISO provides for only one designation describing the bearing unit (both rings).

4.3.1. Tapered roller bearings with metric dimensions (DESIGNATION SYSTEM ACCORDING TO ISO STANDARDS)

4.3.1.a. Dimension series

- **329.. 320.. 330.. 331.. 302.. 322.. 332.. 303.. 313.. 323..**

Five-digit designation, always beginning with the digit 3. The next digit means the bearing width series beginning with the smallest one (0,1,2,3). The third digit means the outer diameter series from the smallest up (9,0,2,3). The last two digits are kept in reserve for marking the inner diameter of a bearing – multiplied by 5 determine the inner diameter in mm, e.g. the 32005 bearing has the inner diameter of 25 mm (05 x 5).

The ISO 355 standard for metric tapered bearings sets the designation system, in which every bearing is defined by the combination of three symbols. The first symbol determines the series of angles of contact. The second symbol is the letter-symbol of the outer diameter series and contains

Contact angle range		
angle series	Angle range	
	from	to
1	reserve	
2	10°	13°52’
3	13°52’	15°59’
4	15°59’	18°55’
5	18°55’	23°
6	23°	27°
7	27°	30°

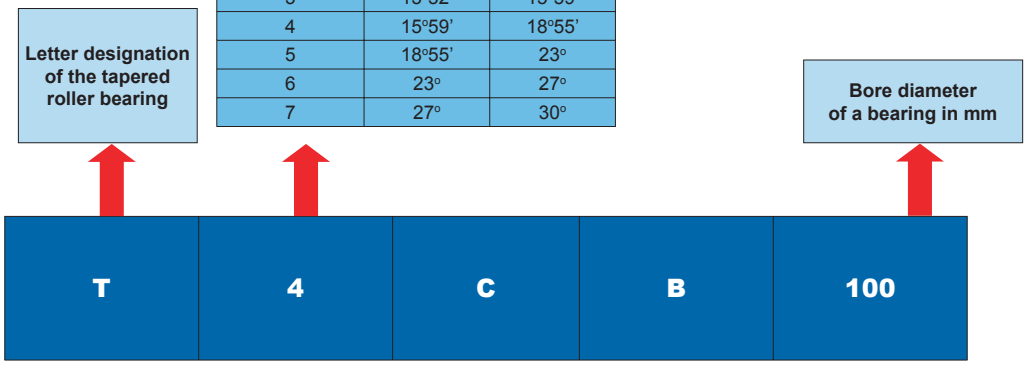

Ratio of the outer diameter to the bore diameter		
diameter series	$\frac{D}{d^{0,77}}$	
	from	to
A	reserve	
B	3,40	3,80
C	3,80	4,40
D	4,40	4,70
E	4,70	5,00
F	5,00	5,60
G	5,60	7,00

Ratio of the bearing width to the thickness of its cross-section		
width series	$\frac{T}{(D-d)^{0,95}}$	
	from	to
A	reserve	
B	0,50	0,68
C	0,68	0,80
D	0,80	0,88
E	0,88	1,00

the range of numerical values of the outer diameter in the function of the bore diameter. The third symbol is the letter designation of the width series, which contains the range of numerical values of the width in the function of the bearing size. When all regular metric bearings get new designation according to the ISO 355 standard, the old designations will be still valid.

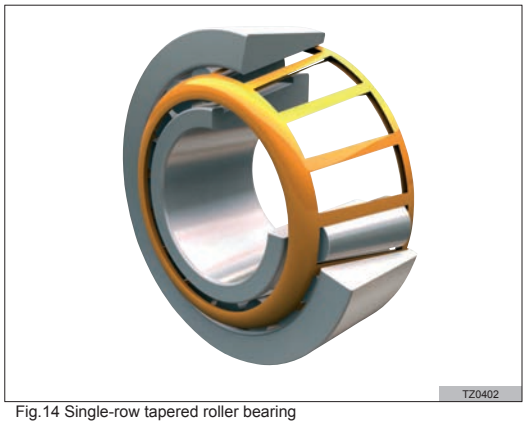

Fig.14 Single-row tapered roller bearing

4.3.2. Inch-dimensioned tapered roller bearings

4.3.2.a. Designation system of original inch bearings

According to this system the bearings are grouped on the ground of their shape and the size of the rolling element – the roller. Through differentiation of, e.g., the number of rollers or the track angle, one can match the bearing to the different load. Each group is represented by a given series number, which most often consists of three up to six digits. Let’s take a look at the 795-series: our exemplary bearing is called 797/792. “797” means the inner sub-assembly and “792” the outer ring. The designation of the inner sub-assembly is most often higher than the series number, and the designation of the outer ring is lower. But there are some exceptions, e.g. the 15000-series bearing: 15123/15245.

4.3.2.b. Designation system according to AFBMA (Anti-Friction Bearing Manufacturers Association Inc)

Nowadays this designation system has become the international standard for marking inch-dimensioned bearings, but it relates to new series only. Former designations of bearings’ elements in conformity with the original system, new designations added to the existing series and patented markings of elements of special bearings are still valid.

https://nppnovoteh.com

The AFBMA designation differs mainly in the fact that it treats separately the inner sub-assembly and the outer ring. The symbols of both parts differ from each other and both parts can be combined in various systems. This fact gives us new opportunities for engineering solutions and increases decisively the number of available types of bearings.
This system separates the inner ring designations from the ones regarding the outer ring, whereas the symbol of the inner sub-assembly is always provided first, followed by the "/"-sign and the symbol of the outer ring.

The symbol itself can be divided into five parts:
- load
- contact angle
- basic series designation (based on inner diameters)
- descriptor of the element (the unit or the ring)
- supplementary designation of the construction variant

Load

Introductory designation, which can consist of one or two letters – determines the type of load the bearing supports.
- **EL** extremely light
- **LL** less than light
- **L** light
- **LM** medium light
- **M** medium
- **HM** medium heavy
- **H** heavy
- **HH** very heavy
- **EH** extremely heavy
- **T** only axial

Contact angle

The first digit behind the introductory designation describes the code of the half of the tapered angle of the outer ring
- **1, 2, 3, 4, 5, 6, 7, 8, 9, 0** whereas the "1" means the smallest angle, other follow in the increasing order.

Basic series designation (based on inner diameters)

The three subsequent digits are kept in reserve for marking the basic bearing's series, which is in turn directly connected with the inner diameter of the bearing.
- from **00** to **999** it is a digital code for the bore in inches from the smallest up to the largest.

Descriptor of the element (the unit or the ring)

The two last digits of the ring's symbol
- from **10** to **19** for outer rings from the smallest to the largest
- from **30** to **49** for outer rings from the smallest to the largest.

If the number of rings in a given series exceeds the range, one applies additional numbers from 20 to 29.

Supplementary designation

Supplementary designation of the construction variant
It consists of one, two or three letters and means modifications of the outside shape or the inner geometry.
The most commonly encountered are:
- **A** differences of diameters, mounting truncation and width
- **AX** as above
- **B** outer ring with the flange
- **B** inner ring – sizes are kept but construction changed
- **F** polyamide cage
- **V** ring made of special steel.

4.3.2.c AFBMA Designation system – for inch-dimensioned bearings transferred into metric dimensions

The system is identical to the standard AFBMA system, but it regards bearings, which in spite of inch designations have metric size. To differentiate them a "J" letter is put before the typical ring designation. e.g. JL69349/JL69310, JLM506849/JLM506810, JHM720249/JHM720210, JL68145/JL68111
Characteristic feature of the AFBMA system is the frequent usage of designations' abbreviations, consisting in omitting the repeated elements of the designation, e.g. LM11749/LM11710 = LM11749/10

4.4. Application

Because of their universal features the tapered roller bearings are widely applied and it is difficult to indicate the field, in which they are not used. We can encounter them just everywhere beginning with the light industry, textile industry and food industry through to automobile industry and agriculture not to mention the heavy industry, iron and steel industry, mining, aircraft industry and shipyards. The units of tapered precision bearings successfully substitute angular-contact and cylindrical bearings in the machine tools' spindles. Thrust tapered bearings (not mentioned here) in many cases demonstrate their superiority when compared to thrust ball bearings and even in comparison with thrust spherical roller bearings. The most durable solutions for car wheel hubs are based on double-row tapered bearings, combined integrally and sharing the same outer ring. Such a construction allows an extremely easy and proper assembly. In this field the tapered bearings compete with double-row angular-compact ball bearings, but are decisively more reliable and durable than their competitors.
Besides it is worth noting, that the most part of hubs of the cars currently running on our roads base on the units of two single-row tapered roller bearings.

4.5. Notes

- Tapered roller bearings produced currently (it regards metric bearings) feature modernized construction in relation to their original versions and are characterized by higher load carrying capacity and better rotational parameters. It results from the increased size and number of rollers, whilst the main dimensions are kept. These bearings have been temporarily marked with the **A**-letter or the **E**-letter behind the main symbol, but in the meantime this way of designation is being abandoned, because the latest production of these bearings is no more based on original standards.

- It is often the case that the **X**-marking can be found behind the symbol – it means the main dimensions of such bearing have been changed and it often cannot be substituted with the version without this marking.
  The X-marking most often tells us about:
  - the change in the inner ring height
  - the change in the outer ring height
  - larger mounting truncation of the ring or rings
  - the change in the cage construction
  - the change in the rollers' angle displacement.
- Many companies place the **K**-letter before the ring/bearing symbol to draw attention to inch dimensions of bearings. This letter does not introduce any changes, it's only about the difference in the symbol system.

- In case of inch-dimensioned tapered bearings the symbol of one the rings does not give all information about the second one. That is why it is useful to know the symbol system for both rings or their dimensions.

https://nppnovoteh.com

4. TAPERED ROLLER BEARINGS

4.1. Tapered roller bearings – metric dimensions

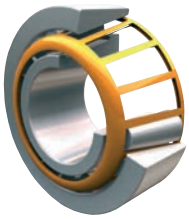

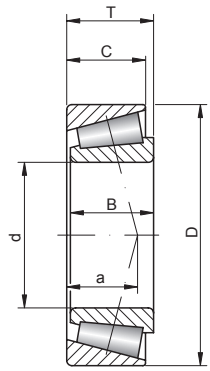

329.. 320.. 330.. 331. . 302..
322.. 332.. 303.. 313.. 323..

15 – 35 mm

Shaft [mm]	Bearing No.	Bearing No. according to ISO 355	Series		Dimensions [mm]					
			SD	SB	d	D	B	T	C	a
15	**30202 A**	-	2	0	15	35	11	11,75	10,00	8,3
	30302 A	T2FB015	3	0	15	42	13	14,25	11,00	9
17	**30203 A**	T2DB017	2	0	17	40	12	13,25	11,00	10
	32203 A	T2DD017	2	2	17	40	16	17,25	14,00	11,4
	30303 A	T2FB017	3	0	17	47	14	15,25	12,00	10
	32303 A	T2FD017	3	2	17	47	19	20,25	16,00	12,2
20	**32004 AX**	T3CC020	0	2	20	42	15	15,00	12,00	12
	30204 A	T2DB020	2	0	20	47	14	15,25	12,00	11
	32204 A	T2DD020	2	2	20	47	18	19,25	15,00	12,5
	30304 A	T2FB020	3	0	20	52	16	16,25	13,00	11
	32304 A	T2FD020	3	2	20	52	21	22,25	18,00	11
22	**320/22 AX**	T3CC022	0	2	22	44	15	15,00	11,50	14
	T2CC022	T2CC022	-	-	22	47	17,5	17,00	13,50	11,3
	302/22 A	-	2	0	22	50	14	15,25	12,00	12,2
	322/22 A	-	2	2	22	50	18	19,25	15,00	14
	303/22 A	-	3	0	22	56	16	17,25	14,00	12,2
	323/22 A	-	3	2	22	56	21	22,25	18,00	14,6
25	**32005 AX**	T4CC025	0	2	25	47	15	15,00	11,50	11
	33005 A	T2CE025	0	3	25	47	17	17,00	14,00	10,9
	30205 A	T3CC025	2	0	25	52	15	16,25	13,00	11
	32205 A	T2CD025	2	2	25	52	18	19,25	15,00	13,5
	33205 A	T2DE025	2	3	25	52	22	22,00	18,00	14
	30305 A	T2FB025	3	0	25	62	17	18,25	15,00	13
	31305 A	T7FB025	3	1	25	62	17	18,25	13,00	20
	32305 A	T2FD025	3	2	25	62	24	25,25	20,00	15
28	**320/28 AX**	T4CC028	0	2	28	52	16	16,00	12,00	12
	302/28 A	-	2	0	28	58	16	17,25	14,00	13,4
	322/28 A	T5DD028	2	2	28	58	19	20,25	16,00	17
	332/28 A	T2DE028	2	3	28	58	24	24,00	19,00	15,4
	303/28 A	-	3	0	28	68	18	19,75	16,00	14,9
	323/28 A	-	3	2	28	68	24	25,75	21,00	17,6
30	**32006 AX**	T4CC030	0	2	30	55	17	17,00	13,00	13
	33006 A	T2CE030	0	3	30	55	20	20,00	16,00	13
	30206 A	T3DB030	2	0	30	62	16	17,25	14,00	14
	32206 A	T3DC030	2	2	30	62	20	21,25	17,00	15
	33206 A	T2DE030	2	3	30	62	25	25,00	19,50	16
	30306 A	T2FB030	3	0	30	72	19	20,75	16,00	15
	31306 A	T7FB030	3	1	30	72	19	20,75	14,00	22
	32306 A	T2FD030	3	2	30	72	27	28,75	23,00	18
32	**320/32 AX**	T4CC032	0	2	32	58	17	17,00	13,00	14
	302/32 A	-	2	0	32	65	17	18,25	15,00	14,9
	322/32 A	-	2	2	32	65	21,5	22,00	17,00	16,3
	332/32 A	T2DE032	2	3	32	65	26	26,00	20,50	16,9
	303/32 A	-	3	0	32	75	20	21,71	18,00	16
	323/32 A	-	3	2	32	75	28	29,75	23,00	19,6
35	**32907 A**	T2BD035	9	2	35	55	14	14,00	11,50	10,9
	32007 AX	T4CC035	0	2	35	62	18	18,00	14,00	15
	33007 A	T2CE035	0	3	35	62	21	21,00	17,00	14,2

- warehouse - order - phone

https://nppnovoteh.com

Weight [kg]	Basic load ratings [kN]		Limiting speed [rpm]		Basic makes*			Bearing No.
	dyn. C	stat. C_0	grease	oil	-	M	P5	
0,0570	12,5	11,8	15000	20000	●	●	●	**30202 A**
0,0950	22,4	20	9000	13000	●	●	●	**30302 A**
0,0750	19	18,6	9000	13000	●	●	●	**30203 A**
0,0945	27,4	27,5	10000	14000	●	●	●	**32203 A**
0,1300	28,1	25	8500	12000	●	●	●	**30303 A**
0,1665	31,9	29,9	9400	13000	●	●	●	**32303 A**
0,0970	24,2	27	8500	12000	●	●	●	**32004 AX**
0,1200	27,5	28	8000	11000	●	●	●	**30204 A**
0,1350	33,1	34,7	8900	12000	●	●	●	**32204 A**
0,1700	34,1	32,5	8000	11000	●	●	●	**30304 A**
0,2300	44	45,5	7500	10000	●	●	●	**32304 A**
0,1060	27	31,5	8900	12000	●	●	●	**320/22 AX**
0,1380	32,7	35,9	8700	12000	●	●	●	**T2CC022**
0,1400	29,2	28,6	8400	11000	●	●	●	**302/22 A**
0,1780	36,8	41,6	8100	11000	●	●	●	**322/22 A**
0,2115	41,7	41,1	7500	10000	●	●	●	**303/22 A**
0,2730	50,6	52,7	7600	10000	●	●	●	**323/22 A**
0,1100	27	32,5	8000	11000	●	●	●	**32005 AX**
0,1300	32,5	40,5	8000	11000	●	●	●	**33005 A**
0,1500	30,8	33,5	7500	10000	●	●	●	**30205 A**
0,1900	35,8	44	7000	9500	●	●	●	**32205 A**
0,2300	47,3	56	6700	9000	●	●	●	**33205 A**
0,2600	44,6	43	6700	9000	●	●	●	**30305 A**
0,2600	38	40	5600	7500	●	●	●	**31305 A**
0,3600	60,5	63	6000	8000	●	●	●	**32305 A**
0,1460	33	40,5	7300	9700	●	●	●	**320/28 AX**
0,2090	38,8	42	7000	9300	●	●	●	**302/28 A**
0,2565	49,2	55,2	6900	9100	●	●	●	**322/28 A**
0,2970	57,6	69,5	7000	9300	●	●	●	**332/28 A**
0,3420	53,5	54	6100	8200	●	●	●	**303/28 A**
0,4690	69,6	75,6	6100	8100	●	●	●	**323/28 A**
0,1700	35,8	44	6700	9000	●	●	●	**32006 AX**
0,2010	42,5	54	6900	9200	●	●	●	**33006 A**
0,2300	40,2	44	6300	8500	●	●	●	**30206 A**
0,2800	50,1	57	6300	8500	●	●	●	**32206 A**
0,3700	64,4	76,5	5600	7500	●	●	●	**33206 A**
0,3900	56,1	56	5600	7500	●	●	●	**30306 A**
0,3900	47,3	50	5000	6700	●	●	●	**31306 A**
0,5500	76,5	85	5300	7000	●	●	●	**32306 A**
0,1810	37	46,5	6600	8700	●	●	●	**320/32 AX**
0,2745	48	51,4	6200	8200	●	●	●	**302/32 A**
0,35	51,6	57,7	6200	8200	●	●	●	**322/32 A**
0,4050	71,8	86,9	6200	8300	●	●	●	**332/32 A**
0,4610	64,4	65,6	5500	7300	●	●	●	**303/32 A**
0,6615	89,6	101	5600	7400	●	●	●	**323/32 A**
0,1210	27,4	37,5	6800	9000	●	●	●	**32907 A**
0,2200	42,9	54	6000	8000	●	●	●	**32007 AX**
0,2630	50,5	66,5	6100	8100	●	●	●	**33007 A**

* Other products also available



https://nppnovoteh.com

4. TAPERED ROLLER BEARINGS

4.1. Tapered roller bearings – metric dimensions

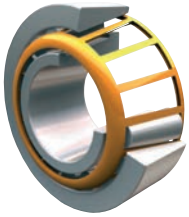

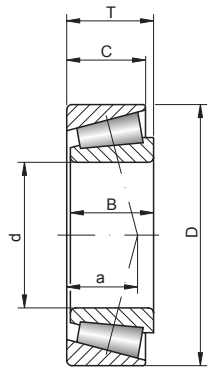

329.. 320.. 330.. 331. . 302..
322.. 332.. 303.. 313.. 323..

35 – 55 mm

Shaft [mm]	Bearing No.	Bearing No. according to ISO 355	Series		Dimensions [mm]					
			SD	SB	d	D	B	T	C	a
35 cont.	**30207 A**	T3DB035	2	0	35	72	17	18,25	15,00	15
	32207 A	T3DC035	2	2	35	72	23	24,25	19,00	17
	33207 A	T2DE035	2	3	35	72	28	28,00	22,00	18
	30307 A	T2FB035	3	0	35	80	21	22,75	18,00	16
	31307 A	T7FB035	3	1	35	80	21	22,75	15,00	25
	32307 A	T2FE035	3	2	35	80	31	32,75	25,00	20
40	**32908 A**	T2BC040	9	2	40	62	15	15,00	12,00	11,9
	32008 AX	T3CD040	0	2	40	68	19	19,00	14,50	15
	33008 A	T2BE040	0	3	40	68	22	22,00	18,00	14,7
	33108 A	T2CE040	1	3	40	75	26	26,00	20,50	18
	30208 A	T3DB040	2	0	40	80	18	19,75	16,00	16
	32208 A	T3DC040	2	2	40	80	23	24,75	19,00	19
	33208 A	T2DE040	2	3	40	80	32	32,00	25,00	21
	T2EE040	T2EE040	-	-	40	85	32,5	33,00	28,00	21,9
	30308 A	T2FB040	3	0	40	90	23	25,25	20,00	22
	31308 A	T7FB040	3	1	40	90	23	25,25	17,00	19
	32308 A	T2FD040	3	2	40	90	33	35,25	27,00	28
45	**32909 A**	T2BC045	9	2	45	68	15	15,00	12,00	12,5
	32009 AX	T3CC045	0	2	45	75	20	20,00	15,50	16
	33009 A	T2CE045	0	3	45	75	24	24,00	19,00	16,4
	33109 A	T3CE045	1	3	45	80	26	26,00	20,50	19
	30209 A	T3DB045	2	0	45	85	19	20,75	16,00	18
	32209 A	T3DC045	2	2	45	85	23	24,75	19,00	20
	33209 A	T3DE045	2	3	45	85	32	32,00	25,00	22
	T7FC045	T7FC045	-	-	45	95	26,5	29,00	20,00	32,6
	T2ED045	T2ED045	-	-	45	95	35	36,00	30,00	23,8
	30309 A	T2FB045	3	0	45	100	25	27,25	22,00	21
	31309 A	T7FB045	3	1	45	100	25	27,25	18,00	31
	32309 A	T2FD045	3	2	45	100	36	38,25	30,00	25
50	**32910 A**	T2BC050	9	2	50	72	15	15,00	12,00	13,7
	32010 AX	T3CC050	0	2	50	80	20	20,00	15,50	18
	33010 A	T2CE050	0	3	50	80	24	24,00	19,00	17
	33110 A	T3CE050	1	3	50	85	26	26,00	20,00	20
	30210 A	T3DB050	2	0	50	90	20	21,75	17,00	19
	32210 A	T3DC050	2	2	50	90	23	24,75	19,00	21
	33210 A	T3DE050	2	3	50	90	32	32,00	24,50	23
	T2ED050	T2ED050	-	-	50	100	35	36,00	30,00	24,5
	T7FC050	T7FC050	-	-	50	105	29	32,00	22,00	35,9
	30310 A	T2FB050	3	0	50	110	27	29,25	23,00	23
	31310 A	T7FB050	3	1	50	110	27	29,25	19,00	34
	32310 A	T2FD050	3	2	50	110	40	42,25	33,00	27
55	**32911 A**	T2BC055	9	2	55	80	17	17,00	14,00	14,5
	32011 AX	T3CC055	0	2	55	90	23	23,00	17,50	20
	33011 A	T2CE055	0	3	55	90	27	27,00	21,00	19
	33111 A	T3CE055	1	3	55	95	30	30,00	23,00	22
	30211 A	T3DB055	2	0	55	100	21	22,75	18,00	20
	32211 A	T3DC055	2	2	55	100	25	26,75	21,00	22
	33211 A	T3DE055	2	3	55	100	35	35,00	27,00	25
	T2ED055	T2ED055	-	-	55	110	35	39,00	27,00	25
	T7FC055	T7FC055	-	-	55	115	31	34,00	23,50	27
	30311 A	T2FB055	3	0	55	120	29	31,50	25,00	24
	31311 A	T7FB055	3	1	55	120	29	31,50	21,00	37

- warehouse - order - phone



Weight [kg]	Basic load ratings [kN]		Limiting speed [rpm]		Basic makes*			Bearing No.
	dyn. C	stat. C_0	grease	oil	-	M	P5	
0,3200	51,2	56	5300	7000	●	●	●	**30207 A**
0,4300	66	78	5300	7000	●	●	●	**32207 A**
0,5600	84,2	106	4800	6300	●	●	●	**33207 A**
0,5200	72,1	73,5	5000	6700	●	●	●	**30307 A**
0,5200	61,6	67	4500	6000	●	●	●	**31307 A**
0,7300	93,5	114	4500	6000	●	●	●	**32307 A**
0,1610	32,5	48	5900	7800	●	●	●	**32908 A**
0,2700	528	71	5300	7000	●	●	●	**32008 AX**
0,3120	59,5	82,5	5300	7100	●	●	●	**33008 A**
0,5100	79,2	104	5000	6700	●	●	●	**33108 A**
0,4200	61,6	68	4800	6300	●	●	●	**30208 A**
0,5300	74,8	86,5	4800	6300	●	●	●	**32208 A**
0,7700	105	132	4300	5600	●	●	●	**33208 A**
0,9000	114	143	4800	6400	●	●	●	**T2EE040**
0,7200	85,8	95	4500	6000	●	●	●	**30308 A**
0,7200	73,7	81,5	4000	5300	●	●	●	**31308 A**
1,0000	117	140	4000	5300	●	●	●	**32308 A**
0,1880	33,5	51,5	5300	7000	●	●	●	**32909 A**
0,3400	58,3	80	4800	6300	●	●	●	**32009 AX**
0,3980	66	93,5	4800	6400	●	●	●	**33009 A**
0,5600	84,2	114	4500	6000	●	●	●	**33109 A**
0,4800	66	76,5	4500	6000	●	●	●	**30209 A**
0,5800	80,9	98	4500	6000	●	●	●	**32209 A**
0,8200	108	143	4000	5300	●	●	●	**33209 A**
0,9430	94,1	118	3600	5100	●	●	●	**T7FC045**
1,2000	140	177	4300	5700	●	●	●	**T2ED045**
0,9700	108	120	4000	5300	●	●	●	**30309 A**
0,9500	91,3	102	3400	4500	●	●	●	**31309 A**
1,3500	140	170	3600	4800	●	●	●	**32309 A**
0,1910	35,5	57	4700	6300	●	●	●	**32910 A**
0,3700	60,5	88	4500	6000	●	●	●	**32010 AX**
0,4500	69,3	102	4500	6000	●	●	●	**33010 A**
0,5900	85,8	122	4300	5600	●	●	●	**33110 A**
0,5400	76,5	91,5	4300	5600	●	●	●	**30210 A**
0,6100	82,5	100	4300	5600	●	●	●	**32210 A**
0,9000	114	160	3800	5000	●	●	●	**33210 A**
1,2800	157	196	4100	5400	●	●	●	**T2ED050**
1,2500	113	140	3300	4600	●	●	●	**T7FC050**
1,2500	125	140	3600	4800	●	●	●	**30310 A**
1,2000	106	120	3200	4300	●	●	●	**31310 A**
1,8000	172	212	3200	4300	●	●	●	**32310 A**
0,2740	44,5	73,5	4300	5700	●	●	●	**32911 A**
0,5500	80,9	116	4000	5300	●	●	●	**32011 AX**
0,6700	89,7	137	4000	5300	●	●	●	**33011 A**
0,8600	110	156	3800	5000	●	●	●	**33111 A**
0,7000	89,7	106	3800	5000	●	●	●	**30211 A**
0,8300	106	129	3800	5000	●	●	●	**32211 A**
1,2000	138	190	3400	4500	●	●	●	**33211 A**
1,7000	179	232	3400	4500	●	●	●	**T2ED055**
1,5900	129	164	3000	4200	●	●	●	**T7FC055**
1,5500	142	163	3200	4300	●	●	●	**30311 A**
1,5500	121	137	2800	3800	●	●	●	**31311 A**

* Other products also available

https://nppnovoteh.com

4. TAPERED ROLLER BEARINGS

4.1. Tapered roller bearings – metric dimensions

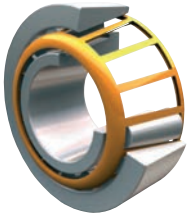

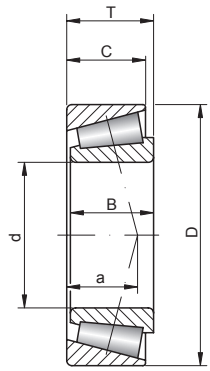

329.. 320.. 330.. 331. . 302..
322.. 332.. 303.. 313.. 323..

55 – 80 mm

Shaft [mm]	Bearing No.	Bearing No. according to ISO 355	Series		Dimensions [mm]					
			SD	SB	d	D	B	T	C	a
55 cont.	**32311 A**	T2FD055	3	2	55	120	43	45,50	35,00	29
60	**32912 A**	T2BC060	9	2	60	85	17	17,00	14,00	15,6
	32012 AX	T4CC060	0	2	60	95	23	23,00	17,50	21
	33012 A	T2CE060	0	3	60	95	27	27,00	21,00	20
	33112 A	T3CE060	1	3	60	100	30	30,00	23,00	23
	30212 A	T3EB060	2	0	60	110	22	23,75	19,00	22
	32212 A	T3EC060	2	2	60	110	28	29,75	24,00	24
	33212 A	T3EE060	2	3	60	110	38	38,00	29,00	27
	T5ED060	T5ED060	-	-	60	115	38	39,00	31,00	32,4
	T2EE060	T2EE060	-	-	60	115	39	40,00	33,00	27,6
	T7FC060	T7FC060	-	-	60	125	33,5	37,00	26,00	40,8
	30312 A	T2FB060	3	0	60	130	31	33,50	26,00	26
	31312 A	T7FB060	3	1	60	130	31	33,50	22,00	39
	32312 A	T2FD060	3	2	60	130	46	48,50	37,00	31
65	**32913 A**	T2BC065	9	2	65	90	17	17,00	14,00	16,8
	32013 AX	T4CC065	0	2	65	100	23	23,00	17,50	22
	33013 A	T2CE065	0	3	65	100	27	27,00	21,00	21
	33113 A	T3DE065	1	3	65	110	34	34,00	26,50	26
	30213 A	T3EB065	2	0	65	120	23	24,75	20,00	23
	32213 A	T3EC065	2	2	65	120	31	32,75	27,00	27
	T5ED065	T5ED065	-	-	65	120	38	39,00	31,00	35
	33213 A	T3EE065	2	3	65	120	41	41,00	32,00	29
	T7FC065	T7FC065	-	-	65	130	33,5	37,00	26,00	44
	30313 A	T2GB065	3	0	65	140	33	36,00	28,00	28
	31313 A	T7GB065	3	1	65	140	33	36,00	23,00	42
	32313 A	T2GD065	3	2	65	140	48	51,00	39,00	33
70	**32914 A**	T2BC070	9	2	70	100	20	20,00	16,00	17,8
	32014 AX	T4CC070	0	2	70	110	25	25,00	19,00	23
	33014 A	T2CE070	0	3	70	110	31	31,00	25,50	23
	33114 A	T3DE070	1	3	70	120	37	37,00	29,00	28
	30214 A	T3EB070	2	0	70	125	24	26,25	21,00	25
	32214 A	T3EC070	2	2	70	125	31	33,25	27,00	28
	33214 A	T3EE070	2	3	70	125	41	41,00	32,00	30
	T2ED070	T2ED070	-	-	70	130	42	43,00	35,00	30,2
	T7FC070	T7FC070	-	-	70	140	35,5	39,00	27,00	46,5
	T4FE070	T4FE070	-	-	70	140	51	52,00	43,00	37,7
	30314 A	T2GB070	3	0	70	150	35	38,00	30,00	29
	31314 A	T7GB070	3	1	70	150	35	38,00	25,00	45
	32314 A	T2GD070	3	2	70	150	51	54,00	42,00	36
75	**32915 A**	T2BC075	9	2	75	105	20	20,00	16,00	19
	32015 AX	T4CC075	0	2	75	115	25	25,00	19,00	25
	33015 A	T2CE075	0	3	75	115	31	31,00	25,50	23
	33115 A	T3DE075	1	3	75	125	37	37,00	29,00	29
	30215 A	T4DB075	2	0	75	130	25	27,25	22,00	27
	32215 A	T4DC075	2	2	75	130	31	33,25	27,00	29
	33215 A	T3EE075	2	3	75	130	41	41,00	31,00	32
	T7FC075	T7FC075	-	-	75	150	38	42,00	29,00	50,6
	30315 A	T2GB075	3	0	75	160	37	40,00	31,00	31
	31315 A	T7GB075	3	1	75	160	37	40,00	26,00	48
	32315 A	T2GD075	3	2	75	160	55	58,00	45,00	38
80	**32916 A**	T2BC080	9	2	80	110	20	20,00	16,00	20,1

- warehouse - order - phone

https://nppnovoteh.com

Weight [kg]	Basic load ratings [kN]		Limiting speed [rpm]		Basic makes*			Bearing No.
	dyn. C	stat. C_0	grease	oil	-	M	P5	
2,3000	190	260	2800	3800	●	●	●	**32311 A**
0,2960	51	83	4000	5300	◴	●	●	**32912 A**
0,5900	82,5	122	3800	5000	●	●	●	**32012 AX**
0,7100	91,3	143	3800	5000	◴	◴	●	**33012 A**
0,9200	117	170	3600	4800	◴	◴	●	**33112 A**
0,8800	99	114	3400	4500	●	●	●	**30212 A**
1,1500	125	160	3400	4500	●	●	●	**32212 A**
1,6000	168	236	3000	4000	◴	●	●	**33212 A**
1,8100	158	227	3400	4600	◴	●	●	**T5ED060**
1,8000	183	242	3400	4600	◴	●	●	**T2EE060**
2,0300	153	194	2800	3900	◴	●	●	**T7FC060**
1,9500	168	196	3000	4000	●	●	●	**30312 A**
1,9000	145	166	2600	3400	●	●	●	**31312 A**
2,8500	229	290	2600	3600	●	●	●	**32312 A**
0,3150	48,5	85	3700	4900	◴	●	●	**32913 A**
0,6300	84,2	127	3400	4500	●	●	●	**32013 AX**
0,7800	96,8	156	3400	4500	◴	◴	●	**33013 A**
1,3000	142	208	3200	4300	◴	◴	●	**33113 A**
1,1500	114	134	3000	4000	●	●	●	**30213 A**
1,5000	151	193	3000	4000	●	●	●	**32213 A**
1,9300	151	232	3200	4300	◴	●	●	**T5ED065**
2,0500	194	270	2800	3800	◴	●	●	**33213 A**
2,1700	148	211	2600	3600	◴	●	●	**T7FC065**
2,4000	194	228	2600	3600	●	●	●	**30313 A**
2,3500	165	193	2200	3200	●	●	●	**31313 A**
3,4500	264	335	2400	3400	●	●	●	**32313 A**
0,4870	68,5	110	3400	4600	◴	●	●	**32914 A**
0,8400	101	153	3200	4300	●	◴	●	**32014 AX**
1,1000	130	196	3200	4300	◴	◴	●	**33014 A**
1,7000	172	250	3000	4000	◴	◴	●	**33114 A**
1,2500	125	156	3000	4000	●	●	●	**30214 A**
1,6000	157	208	2800	3800	●	●	●	**32214 A**
2,1000	201	285	2600	3600	◴	●	●	**33214 A**
2,4800	233	319	3000	4000	◴	●	●	**T2ED070**
2,6400	177	242	2400	3400	◴	●	●	**T7FC070**
3,6900	264	382	2900	3800	◴	●	●	**T4FE070**
2,9000	220	260	2400	3400	●	●	●	**30314 A**
2,9500	187	220	2000	3000	●	◴	●	**31314 A**
4,3000	297	380	2200	3200	●	◴	●	**32314 A**
0,5110	69,5	114	3200	4300	◴	●	●	**32915 A**
0,9000	106	163	3000	4000	●	◴	●	**32015 AX**
1,1500	134	228	3000	4000	◴	◴	●	**33015 A**
1,8000	176	265	2800	3800	◴	◴	●	**33115 A**
1,4000	140	176	2800	3800	●	●	●	**30215 A**
1,7000	161	212	2600	3600	●	●	●	**32215 A**
2,2500	209	300	2400	3400	◴	●	●	**33215 A**
3,2400	191	270	2200	3100	◴	●	●	**T7FC075**
3,4500	246	290	2200	3200	●	●	●	**30315 A**
3,5000	209	245	1900	2800	●	◴	●	**31315 A**
5,2000	336	440	2000	3000	●	◴	●	**32315 A**
0,5400	72	121	3000	4000	◴	●	●	**32916 A**

* Other products also available



https://nppnovoteh.com

4. TAPERED ROLLER BEARINGS

4.1. Tapered roller bearings – metric dimensions

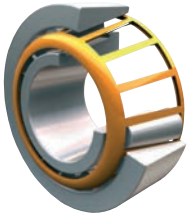

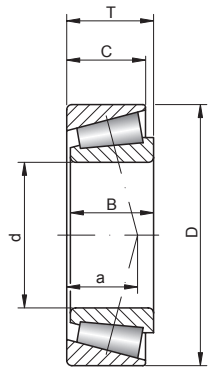

329.. 320.. 330.. 331. . 302..
322.. 332.. 303.. 313.. 323..

80 – 100 mm

Shaft [mm]	Bearing No.	Bearing No. according to ISO 355	Series		Dimensions [mm]					
			SD	SB	d	D	B	T	C	a
80 cont.	**32016 AX**	T3CC080	0	2	80	125	29	29,00	22,00	27
	33016 A	T2CE080	0	3	80	125	36	36,00	29,50	26
	33116 A	T3DE080	1	3	80	130	37	37,00	29,00	30
	30216 A	T3EB080	2	0	80	140	26	28,25	22,00	28
	32216 A	T3EC080	2	2	80	140	33	35,25	28,00	30
	33216 A	T3EE080	2	3	80	140	46	46,00	35,00	35
	T2ED080	T2ED080	-	-	80	145	45	46,00	38,00	32,7
	30316 A	T2GB080	3	0	80	170	39	42,50	33,00	33
	31316 A	T7GB080	3	1	80	170	39	42,50	27,00	52
	32316 A	T2GD080	3	2	80	170	58	61,50	48,00	41
85	**32917 A**	T2BC085	9	2	85	120	23	23,00	18,00	21,2
	32017 AX	T4CC085	0	2	85	130	29	29,00	22,00	28
	33017 A	T2CE085	0	3	85	130	36	36,00	29,50	26
	33117 A	T3DE085	1	3	85	140	41	41,00	32,00	32
	30217 A	T3EB085	2	0	85	150	28	30,50	24,00	30
	32217 A	T3EC085	2	2	85	150	36	38,50	30,00	33
	33217 A	T3EE085	2	3	85	150	49	49,00	37,00	37
	30317 A	T2GB085	3	0	85	180	41	44,50	34,00	35
	31317 A	T7GB085	3	1	85	180	41	44,50	28,00	55
	32317 A	T2GD085	3	2	85	180	60	53,50	49,00	42
90	**32918 A**	T2BC090	9	2	90	125	23	23,00	18,00	22,3
	32018 AX	T3CC090	0	2	90	140	32	32,00	24,00	30
	33018 A	T2CE090	0	3	90	140	39	39,00	32,50	27
	33118 A	T3DE090	1	3	90	150	45	45,00	35,00	35
	T2ED090	T2ED090	-	-	90	155	46	46,00	38,00	33,5
	30218 A	T3FB090	2	0	90	160	30	32,50	26,00	31
	32218 A	T3FC090	2	2	90	160	40	42,50	34,00	36
	33218 A	T3FC090	2	3	90	160	55	55,00	42,00	40,8
	T7FC090	T7FC090	-	-	90	175	45	48,00	33,00	57
	30318 A	T2GB090	3	0	90	190	43	46,50	36,00	36
	31318 A	T7GB090	3	1	90	190	43	46,50	30,00	57
	32318 A	T2GD090	3	2	90	190	64	67,50	53,00	44
95	**32919 A**	T2BC095	9	2	95	130	23	23,00	18,00	23,5
	32019 AX	T4CC095	0	2	95	145	32	32,00	24,00	31
	33019 A	T2CE095	0	3	95	145	39	39,00	32,50	28
	T2ED095	T2ED095	-	-	95	160	46	46,00	38,00	34,6
	33119 A	T3EE095	1	3	95	160	49	49,00	38,00	37,3
	30219 A	T3FB095	2	0	95	170	32	34,50	27,00	33
	32219 A	T3FC095	2	2	95	170	43	45,50	37,00	39
	33219 A	T3FE095	2	3	95	170	58	58,00	44,00	42,8
	30319 A	T2GB095	3	0	95	200	45	49,50	38,00	39
	31319 A	T7GB095	3	1	95	200	45	49,50	32,00	60
	32319 A	T2GD095	3	2	95	200	67	71,50	55,00	47
100	**32920 A**	T2CC100	9	2	100	140	25	25,00	20,00	24
	T4CB100	T4CB100	-	-	100	145	22,5	24,00	17,50	29,9
	32020 AX	T4CC100	0	2	100	150	32	32,00	24,00	32
	33020 A	T2CE100	0	3	100	150	39	39,00	32,50	29
	T2EE100	T2EE100	-	-	100	165	46	47,00	39,00	35,1
	33120 A	T3EE100	1	3	100	165	52	52,00	40,00	40,1
	30220 A	T3FB100	2	0	100	180	34	37,00	29,00	35
	32220 A	T3FC100	2	2	100	180	46	49,00	39,00	41
	33220 A	T3FE100	2	3	100	180	63	63,00	48,00	43

- warehouse - order - phone

Weight [kg]	Basic load ratings [kN]		Limiting speed [rpm]		Basic makes*			Bearing No.
	dyn. C	stat. C_0	grease	oil	-	M	P5	
1,3000	138	216	2600	3600	●	◴	●	**32016 AX**
1,6500	168	285	2600	3600	◴	◴	●	**33016 A**
1,9000	179	280	2600	3600	◴	◴	●	**33116 A**
1,6000	151	183	2400	3400	●	●	●	**30216 A**
2,0500	187	245	2400	3400	●	●	●	**32216 A**
2,9000	251	375	2200	3200	◴	●	●	**33216 A**
3,2000	266	381	2600	3500	◴	●	●	**T2ED080**
4,1000	270	320	2000	3000	●	◴	●	**30316 A**
4,0500	224	265	1900	2800	●	◴	●	**31316 A**
6,2000	380	500	1900	2800	●	◴	●	**32316 A**
0,7730	94	157	2800	3800	◴	●	●	**32917 A**
1,3500	140	224	2400	3400	●	◴	●	**32017 AX**
1,7500	183	310	2600	3600	◴	◴	●	**33017 A**
2,4500	220	340	2400	3400	◴	◴	●	**33117 A**
2,0500	176	220	2200	3200	●	●	●	**30217 A**
2,6000	212	285	2200	3200	●	●	●	**32217 A**
3,7000	286	430	2000	3000	◴	●	●	**33217 A**
4,8300	303	365	1900	2800	●	◴	●	**30317 A**
4,6000	242	285	1800	2600	●	◴	●	**31317 A**
6,8500	402	530	1800	2600	●	◴	●	**32317 A**
0,8170	97,5	168	2700	3600	◴	●	●	**32918 A**
1,7500	168	270	2200	3200	●	◴	●	**32018 AX**
2,2000	216	355	2200	3200	◴	◴	●	**33018 A**
3,1000	251	390	2000	3000	◴	◴	●	**33118 A**
3,4700	273	405	2400	3200	◴	●	●	**T2ED090**
2,5500	194	245	2000	3000	●	●	●	**30218 A**
3,3500	251	340	2000	3000	●	●	●	**32218 A**
4,7205	343	527	2400	3200	◴	●	●	**33218 A**
4,9500	270	380	1700	2400	◴	●	●	**T7FC090**
5,6500	330	400	1800	2600	●	◴	●	**30318 A**
5,9000	264	315	1700	2400	●	◴	●	**31318 A**
8,4000	457	610	1700	2400	●	◴	●	**32318 A**
0,8510	101	178	2500	3400	◴	●	●	**32919 A**
1,8000	16,8	270	2200	3200	●	◴	●	**32019 AX**
2,3000	220	375	2200	3200	◴	◴	●	**33019 A**
3,6200	281	427	2300	3100	◴	●	●	**T2ED095**
4,0095	304	473	2300	3100	◴	◴	●	**33119 A**
3,0000	216	275	1900	2800	●	●	●	**30219 A**
4,0500	281	390	1900	2800	●	●	●	**32219 A**
5,5620	374	582	2200	2900	◴	●	●	**33219 A**
6,7000	330	390	1800	2600	●	◴	●	**30319 A**
6,9500	292	355	1700	2400	●	◴	●	**31319 A**
11,0000	501	670	1700	2400	●	◴	●	**32319 A**
1,1400	121	206	2400	3200	◴	◴	●	**32920 A**
1,1200	116	167	2400	3200	◴	●	●	**T4CB100**
1,9000	172	280	2000	3000	●	◴	●	**32020 AX**
2,4000	224	390	2000	3000	◴	◴	●	**33020 A**
3,8600	293	458	2200	3000	◴	●	●	**T2EE100**
4,4280	325	523	2200	3000	◴	◴	●	**33120 A**
3,6500	246	320	1900	2800	●	◴	●	**30220 A**
4,9000	319	440	1800	2600	●	◴	●	**32220 A**
6,3495	431	680	2100	2800	◴	●	●	**33220 A**

* Other products also available

https://nppnovoteh.com

4. TAPERED ROLLER BEARINGS

4.1. Tapered roller bearings – metric dimensions

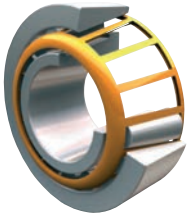

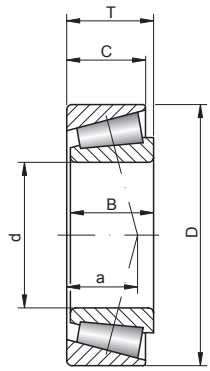

329.. 320.. 330.. 331. . 302..
322.. 332.. 303.. 313.. 323..

100 – 140 mm

Shaft [mm]	Bearing No.	Bearing No. according to ISO 355	Series		Dimensions [mm]					
			SD	SB	d	D	B	T	C	a
100 cont.	**30320 A**	T2GB100	3	0	100	215	47	51,50	39,00	40
	31320 A	T7GB100	3	1	100	215	51	56,50	35,00	65
	32320 A	T2GD100	3	2	100	215	73	77,50	60,00	51
105	**32921 A**	T2CC105	9	2	105	145	25	25,00	20,00	25,1
	32021 AX	T4DC105	0	2	105	160	35	35,00	26,00	34
	33021 A	T2DE105	0	3	105	160	43	43,00	34,00	31
	33121 A	T3EE105	1	3	105	175	56	56,00	44,00	43,2
	30221 A	T3FB105	2	0	105	190	36	39,00	30,00	37
	32221 A	T3FC105	2	2	105	190	50	53,00	43,00	44
	33221 A	T3FE105	2	3	105	190	68	68,00	52,00	48,8
	31321 A	T7GB105	3	1	105	225	53	58,00	36,00	68
	32321 A	T2GD105	3	2	105	225	77	81,50	63,00	53
110	**32922 A**	T2CC110	9	2	110	150	25	25,00	20,00	26
	T4CB110	T4CB110	-	-	110	160	25,5	27,00	19,50	31,8
	32022 AX	T4DC110	0	2	110	170	38	38,00	29,00	36
	33022 A	T2DE110	0	3	110	170	47	47,00	37,00	34
	33122 A	T3EE110	1	3	110	180	56	56,00	43,00	44
	30222 A	T3FB110	2	0	110	200	38	41,00	32,00	39
	32222 A	T3FC110	2	2	110	200	53	56,00	46,00	46
	30322 A	T2GB110	3	0	110	240	50	54,50	42,00	43
	31322 A	T7GB110	3	1	110	240	57	63,00	38,00	72
	32322 A	T2GD110	3	2	110	240	80	84,50	65,00	55
120	**32924 A**	T2CC120	9	2	120	165	29	29,00	23,00	29,4
	T4CB120	T4CB120	-	-	120	170	25	27,00	19,50	34,6
	32024 AX	T4DC120	0	2	120	180	38	38,00	29,00	39
	33024 A	T2DE120	0	3	120	180	48	48,00	38,00	36
	33124 A	T3FE120	1	3	120	200	62	62,00	48,00	47,8
	30224 A	T4FB120	2	0	120	215	40	43,50	34,00	43
	32224 A	T4FD120	2	2	120	215	58	61,50	50,00	51
	30324 A	T2GB120	3	0	120	260	55	59,50	46,00	47
	31324 A	T7GB120	3	1	120	260	62	68,00	42,00	78
	32324 A	T2GD120	3	2	120	260	86	90,50	69,00	60
130	**32926 A**	T2CC130	9	2	130	180	32	32,00	25,00	31
	T4CB130	T4CB130	-	-	130	185	27	29,00	21,00	37,8
	32026 AX	T4EC130	0	2	130	200	45	45,00	34,00	42
	33026 A	T2EE130	0	3	130	200	55	55,00	47,00	42,5
	30226 A	T4FB130	2	0	130	230	40	43,75	34,00	45
	32226 A	T4FD130	2	2	130	230	64	67,75	54,00	56
	30326 A	T2GB130	3	0	130	280	58	63,75	49,00	51
	31326 A	T7GB130	3	1	130	280	66	72,00	44,00	84
	32326 A	-	3	2	130	280	93	98,75	78,00	66
140	**32928 A**	T2CC140	9	2	140	190	32	32,00	25,00	33
	T4CB140	T4CB140	-	-	140	195	27	29,00	21,00	40,9
	32028 AX	T4DC140	0	2	140	210	45	45,00	34,00	46
	33028 A	T2DE140	0	3	140	210	56	56,00	47,00	45,6
	30228 A	T4FB140	2	0	140	250	42	45,75	36,00	47
	32228 A	T4FD140	2	2	140	250	68	71,75	58,00	60
	30328 A	T2GB140	3	0	140	300	62	67,75	53,00	54
	31328 A	T7GB140	3	1	140	300	70	77,00	47,00	90
	32328 A	-	3	2	140	300	102	107,75	85,00	74,2

- warehouse - order - phone

https://nppnovoteh.com

Weight [kg]	Basic load ratings [kN]		Limiting speed [rpm]		Basic makes*			Bearing No.
	dyn. C	stat. C_0	grease	oil	-	M	P5	
8,0500	402	490	1700	2400	●	◴	●	**30320 A**
8,6000	374	465	1600	2200	●	◴	●	**31320 A**
12,5000	572	780	1600	2200	●	◴	●	**32320 A**
1,2000	126	219	2300	3000	◴	◴	●	**32921 A**
2,4000	201	335	1900	2800	●	◴	●	**32021 AX**
3,0500	246	430	1900	2800	◴	◴	●	**33021 A**
5,4000	360	607	2100	2800	◴	◴	●	**33121 A**
4,2500	270	355	1800	2600	●	◴	●	**30221 A**
6,0000	358	510	1800	2600	●	◴	●	**32221 A**
8,3160	497	790	2000	2600	◴	●	●	**33221 A**
9,6500	402	500	1500	2000	●	◴	●	**31321 A**
14,5000	605	815	1500	2000	●	◴	●	**32321 A**
1,2300	127	226	2200	2900	◴	◴	●	**32922 A**
1,6300	146	225	2200	2900	◴	●	●	**T4CB110**
3,0500	233	390	1800	2600	●	◴	●	**32022 AX**
3,8500	281	500	1800	2600	◴	◴	●	**33022 A**
5,5980	369	634	2000	2700	◴	◴	●	**33122 A**
5,1000	308	405	1700	2400	●	◴	●	**30222 A**
7,1000	402	570	1700	2400	●	◴	●	**32222 A**
11,0000	473	585	6600	2200	●	◴	●	**30322 A**
12,0000	457	585	1400	1900	●	◴	●	**31322 A**
17,0000	627	830	1400	1900	●	◴	●	**32322 A**
1,7700	162	294	2000	2600	◴	◴	●	**32924 A**
1,7600	164	262	2000	2700	◴	●	●	**T4CB120**
3,2500	242	415	1700	2400	●	◴	●	**32024 AX**
4,2000	292	540	1800	2600	◴	◴	●	**33024 A**
7,8435	462	785	1800	2400	◴	◴	●	**33124 A**
6,1500	341	465	1600	2200	●	◴	●	**30224 A**
9,1500	468	695	1600	2200	●	◴	●	**32224 A**
14,0000	561	710	1500	2000	●	◴	●	**30324 A**
15,5000	539	695	1200	1700	●	◴	●	**31324 A**
21,5000	792	1120	1300	1800	●	◴	●	**32324 A**
2,3600	194	350	1800	2400	◴	◴	●	**32926 A**
2,2200	183	282	1800	2500	◴	●	●	**T4CB130**
4,9500	314	540	1600	2200	●	◴	●	**32026 AX**
6,2685	390	705	1700	2300	◴	◴	●	**33026 A**
7,6000	369	490	1500	2000	●	◴	●	**30226 A**
11,5000	550	830	1500	2000	●	◴	●	**32226 A**
17,0000	627	800	1300	1800	●	◴	●	**30326 A**
18,5000	605	780	1100	1600	●	◴	●	**31326 A**
30,5000	858	1180	1100	1600	●	◴	●	**32326 A**
2,5100	200	375	1700	2200	◴	◴	●	**32928 A**
2,3600	185	293	1700	2300	◴	●	●	**T4CB140**
5,2500	330	585	1600	2200	●	◴	●	**32028 AX**
6,6960	406	758	1600	2200	◴	◴	●	**33028 A**
8,6500	418	570	1400	1900	●	◴	●	**30228 A**
14,5000	644	1000	1400	1900	●	◴	●	**32228 A**
21,0000	737	950	1200	1700	●	◴	●	**30328 A**
24,5000	693	900	1000	1500	●	◴	●	**31328 A**
37,2150	1100	1570	1300	1700	●	◴	●	**32328 A**

* Other products also available

https://nppnovoteh.com

4. TAPERED ROLLER BEARINGS

4.1. Tapered roller bearings – metric dimensions

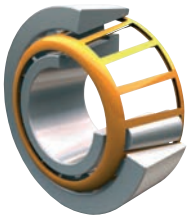

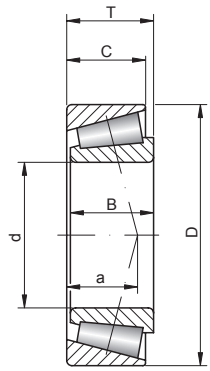

329.. 320.. 330.. 331. . 302..
322.. 332.. 303.. 313.. 323..

150 – 240 mm

Shaft [mm]	Bearing No.	Bearing No. according to ISO 355	Series		Dimensions [mm]					
			SD	SB	d	D	B	T	C	a
150	**T4DB150**	T4DB150	-	-	150	210	30	32,00	23,00	41
	32930 A	T2DC150	9	2	150	210	38	38,00	30,00	36,1
	32030 AX	T4EC150	0	2	150	225	48	48,00	36,00	49
	33030 A	T3EE150	0	3	150	225	59	59,00	49,00	48
	30230 A	T4GB150	2	0	150	270	45	49,00	38,00	50
	32230 A	T4GD150	2	2	150	270	73	77,00	60,00	64
	30330 A	T2GB150	3	0	150	320	65	72,00	55,00	58
	31330 A	T7GB150	3	1	150	320	75	82,00	50,00	96
	32330 A	-	3	2	150	320	108	114,00	90,00	76
160	**T4DB160**	T4DB160	-	-	160	220	30	32,00	23,00	44,7
	32932 A	T2DC160	9	2	160	220	38	38,00	30,00	38,4
	32032 AX	T4EC160	0	2	160	240	51	51,00	38,00	52
	30232 A	T4GB160	2	0	160	290	48	52,00	40,00	54
	32232 A	T4GD160	2	2	160	290	80	84,00	67,00	70
	30332 A	T2GB160	3	0	160	340	68	75,00	58,00	61
	32332 A	-	3	2	160	340	114	121,00	95,00	83
170	**32934 A**	T3DC170	9	2	170	230	38	38,00	30,00	42
	32034 AX	T4EC170	0	2	170	260	57	57,00	43,00	56
	30234 A	T4GB170	2	0	170	310	52	57,00	43,00	58
	32234 A	T4GD170	2	2	170	310	86	91,00	71,00	75
	30334 A	T2GB170	3	0	170	360	72	80,00	62,00	66
	32334 A	-	3	2	170	360	120	127,00	100,00	86,1
180	**32936 A**	T4DC180	9	2	180	250	45	45,00	34,00	53
	32036 AX	T3FD180	0	2	180	280	64	64,00	48,00	59
	30236 A	T4GB180	2	0	180	320	52	57,00	43,00	61
	32236 A	T4GD180	2	2	180	320	86	91,00	71,00	78
	30336 A	-	3	0	180	380	75	83,00	64,00	71
	32336 A	-	3	2	180	380	126	134,00	106,00	91,8
190	**32938 A**	T4DC190	9	2	190	260	45	45,00	34,00	55
	32038 AX	T4FD190	0	2	190	290	64	64,00	48,00	62
	30238 A	T4GB190	2	0	190	340	55	60,00	46,00	63
	32238 A	T4GD190	2	2	190	340	92	97,00	75,00	81
	30338 A	-	3	0	190	400	78	86,00	65,00	73,2
	32338 A	-	3	2	190	400	132	140,00	109,00	96,5
200	**32940 A**	T3EC200	9	2	200	280	51	51,00	39,00	53
	32040 AX	T4FD200	0	2	200	310	70	70,00	53,00	66
	30240 A	T4GB200	2	0	200	360	58	64,00	48,00	68
	30340 A	-	3	0	200	420	80	89,00	67,00	79,8
	32340 A	-	3	2	200	420	138	146,00	115,00	102,9
220	**T2DC220**	T2DC220	-	-	220	285	40	41,00	33,00	45
	32944 A	T3EC220	9	2	220	300	51	51,00	39,00	58,6
	32044 AX	T4FD220	0	2	220	340	76	76,00	57,00	72
	30244 A	-	2	0	220	400	65	72,00	54,00	74
	32244 A	-	2	2	220	400	108	114,00	90,00	95,9
	30344 A	-	3	0	220	460	88	97,00	73,00	84,6
240	**T4EB240**	T4EB240	-	-	240	320	39	42,00	30,00	60
	32948 A	T4EC240	9	2	240	320	51	51,00	39,00	64
	32048 AX	T4FD240	0	2	240	360	76	76,00	57,00	78
	30248 A	-	2	0	240	440	72	79,00	60,00	82,7

- warehouse - order - phone



Weight [kg]	Basic load ratings [kN]		Limiting speed [rpm]		Basic makes*			Bearing No.
	dyn. C	stat. C_0	grease	oil	-	M	P5	
3,0500	233	390	1500	2000	◴	◴	◴	**T4DB150**
3,9200	268	490	1600	2100	◴	◴	◴	**32930 A**
6,3500	369	655	1500	2000	◴	◴	◴	**32030 AX**
8,1945	459	869	1500	2000	◴	◴	◴	**33030 A**
11,0000	429	560	1300	1800	◴	◴	◴	**30230 A**
17,5000	737	1140	1200	1700	◴	◴	◴	**32230 A**
28,5000	825	1060	1100	1600	◴	◴	◴	**30330 A**
29,5000	781	1020	950	1400	◴	◴	◴	**31330 A**
46,0000	1170	1660	950	1400	◴	◴	◴	**32330 A**
3,2300	225	379	1500	2000	◴	◴	◴	**T4DB160**
4,1500	276	520	1500	1900	◴	◴	◴	**32932 A**
7,7500	429	780	1300	1800	◴	◴	◴	**32032 AX**
13,0000	528	735	1100	1600	◴	◴	◴	**30232 A**
25,5000	880	1400	1100	1600	◴	◴	◴	**32232 A**
29,0000	913	1180	1000	1500	◴	◴	◴	**30332 A**
49,3065	1220	1720	1100	1400	◴	◴	◴	**32332 A**
4,4000	286	560	1400	1800	◴	◴	◴	**32934 A**
10,5000	512	915	1200	1700	◴	◴	◴	**32034 AX**
19,0000	616	865	1000	1500	◴	◴	◴	**30234 A**
28,5000	1010	1630	1000	1500	◴	◴	◴	**32234 A**
35,0000	1020	1340	950	1400	◴	◴	◴	**30334 A**
61,8075	1310	1830	1000	1300	◴	◴	◴	**32334 A**
6,5400	350	700	1300	1700	◴	◴	◴	**32936 A**
14,5000	644	1160	1100	1600	◴	◴	◴	**32036 AX**
20,0000	583	815	1000	1500	◴	◴	◴	**30236 A**
29,5000	1010	1630	950	1400	◴	◴	◴	**32236 A**
41,5665	901	1110	940	1300	◴	◴	◴	**30336 A**
68,1570	1410	1980	960	1300	◴	◴	◴	**32336 A**
6,7700	355	710	1200	1600	◴	◴	◴	**32938 A**
15,0000	660	1200	1000	1500	◴	◴	◴	**32038 AX**
24,0000	721	1000	950	1400	◴	◴	◴	**30238 A**
36,0000	1190	1930	900	1300	◴	◴	◴	**32238 A**
47,3220	1010	1250	880	1200	◴	◴	◴	**30338 A**
81,4500	1550	2190	890	1200	◴	◴	◴	**32338 A**
8,8800	485	895	1100	1500	◴	◴	◴	**32940 A**
19,5000	748	1370	950	1400	◴	◴	◴	**32040 AX**
25,0000	792	1120	900	1300	◴	◴	◴	**30240 A**
51,5880	1120	1450	820	1100	◴	◴	◴	**30340 A**
89,7840	1790	2580	830	1100	◴	◴	◴	**32340 A**
6,4500	396	830	1000	1500	◴	◴	◴	**T2DC220**
10,2000	480	950	1000	1400	◴	◴	◴	**32944 A**
25,5000	897	1660	900	1300	◴	◴	◴	**32044 AX**
40,0000	990	1400	850	1200	◴	◴	◴	**30244 A**
60,0000	1610	2700	800	1100	◴	◴	◴	**32244 A**
67,5630	1260	1680	730	980	◴	◴	◴	**30344 A**
8,4500	429	815	900	1300	◴	◴	◴	**T4EB240**
10,9000	490	1000	940	1200	◴	◴	◴	**32948 A**
27,5000	935	1800	850	1200	◴	◴	◴	**32048 AX**
45,5355	1230	1790	730	980	◴	◴	◴	**30248 A**

* Other products also available

https://nppnovoteh.com

4. TAPERED ROLLER BEARINGS

4.1. Tapered roller bearings – metric dimensions

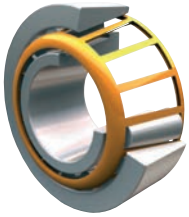

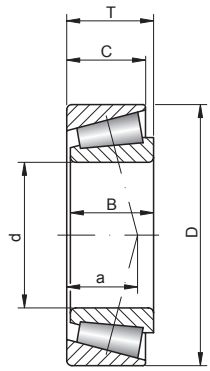

329.. 320.. 330.. 331. . 302..
322.. 332.. 303.. 313.. 323..

240 – 360 mm

Shaft [mm]	Bearing No.	Bearing No. according to ISO 355	Series		Dimensions [mm]					
			SD	SB	d	D	B	T	C	a
240 cont.	**32248 A**	-	2	2	240	440	120	127,00	100,00	105
260	**32952 A**	T3EC260	9	2	260	360	63,5	63,5	48,00	69,6
	32052 AX	T4FC260	0	2	260	400	87	87,00	65,00	84
	30252 A	-	2	0	260	480	80	89,00	67,00	93,6
	32252 A	-	2	2	260	480	130	137,00	106,00	112
280	**32956 A**	T4EC280	9	2	280	380	63,5	63,5	48,00	74
	32056 AX	T4FC280	0	2	280	420	87	87,00	65,00	89
	30256 A	-	2	0	280	500	80	89,00	67,00	96,2
	32256 A	-	2	2	280	500	130	137,00	106,00	117,2
300	**32960 A**	T3FD300	9	2	300	420	76	76,00	57,00	79
	32060 AX	T4GD300	0	2	300	460	100	100,00	74,00	97,9
	30260 A	-	2	0	300	540	85	96,00	71,00	103,9
320	**32964 A**	T3FD320	9	2	320	440	76	76,00	57,00	85
	32064 AX	T4GD320	0	2	320	480	100	100,00	74,00	103
	30264 A	-	2	0	320	580	92	104,00	75,00	111,9
340	**32968 A**	T4FD340	9	2	340	460	76	76,00	57,00	90,5
360	**32972 A**	T4FD360	9	2	360	480	76	76,00	57,00	96,2

- warehouse - order - phone

https://nppnovoteh.com

Weight [kg]	Basic load ratings [kN]		Limiting speed [rpm]		Basic makes*			Bearing No.
	dyn. C	stat. C_0	grease	oil	-	M	P5	
81,5000	1940	3350	750	1000	◴	◴	↷	**32248 A**
18,8000	705	1430	860	1100	◴	◴	↷	**32952 A**
40,0000	1170	2200	800	1100	◴	◴	↷	**32052 AX**
63,5940	1210	1860	650	870	◴	◴	↷	**30252 A**
106,1550	1760	2870	660	880	◴	◴	↷	**32252 A**
20,0000	725	1520	790	1100	◴	◴	↷	**32956 A**
40,5000	1210	2360	750	1000	◴	◴	↷	**32056 AX**
67,5090	1260	1920	610	810	◴	◴	↷	**30256 A**
111,1140	1860	3150	610	810	◴	◴	↷	**32256 A**
31,4000	1010	2090	720	970	◴	◴	↷	**32960 A**
59,6000	1490	2830	680	910	◴	◴	↷	**32060 AX**
83,6325	1510	2360	550	730	◴	◴	↷	**30260 A**
33,1000	1010	2150	670	900	◴	◴	↷	**32964 A**
64,0000	1540	3100	630	850	◴	◴	↷	**32064 AX**
106,1550	1740	2770	490	660	◴	◴	↷	**30264 A**
34,9000	1040	2270	670	900	◴	◴	↷	**32968 A**
36,6000	1050	2330	590	780	◴	◴	↷	**32972 A**

* Other products also available



https://nppnovoteh.com

4. TAPERED ROLLER BEARINGS

4.2. Tapered roller bearings – inch dimensions



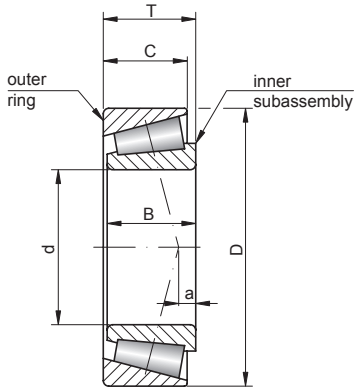

Bearing No.	Dimensions [mm]					
	d	D	B	C	T	a
00050/00150	12,700	38,100	14,072	11,112	13,495	5,10
L21549/11	15,875	34,988	10,998	8,712	10,998	3,30
03062/03162	15,875	41,275	14,681	11,112	14,288	5,10
11590/11520	15,875	42,862	14,288	9,525	14,288	1,30
17580/17520	15,875	42,862	16,670	13,495	16,670	5,80
HM81649/10	15,875	46,975	21,000	16,000	21,000	6,10
05062/05185	15,875	47,000	14,381	11,112	14,381	4,10
09062/09195	15,875	49,225	21,539	14,288	19,845	9,10
21063/21212	15,875	53,975	21,839	15,875	22,225	5,80
05066/05185	16,993	47,000	14,381	11,112	14,381	4,10
LM11749/10	17,462	39,878	14,605	10,668	13,843	5,10
LM11949/10	19,050	45,237	16,637	12,065	15,494	5,60
05075/05185	19,050	47,000	14,381	11,112	14,381	4,10
09067/09195	19,050	49,225	19,050	14,288	18,034	7,40
09067/09194	19,050	49,225	19,050	17,462	21,209	7,40
09067/09196	19,050	49,225	19,050	17,462	21,209	7,40
09074/09195	19,050	49,225	21,539	14,288	19,845	9,10
09078/09195	19,050	49,225	21,539	14,288	19,845	9,10
21075/21212	19,050	53,975	21,839	15,875	22,225	5,80
1775/1729	19,050	56,896	19,837	15,875	19,368	6,90
05079/05185	19,987	47,000	14,381	11,112	14,381	4,10
07079/07196	20,000	50,005	14,260	9,525	13,495	2,80
09081/09195	20,625	49,225	21,539	14,288	19,845	9,10
12580/12520	20,638	49,225	19,845	15,875	19,845	7,10
M12649/10	21,430	50,005	18,288	13,970	17,526	6,40
LM12749/10	21,986	45,237	16,637	12,065	15,494	5,30
LM12749/11	21,986	45,974	16,637	12,065	15,494	5,30
LL52549/10	22,225	42,070	11,176	8,636	11,176	1,80
M12648/10	22,225	50,005	18,288	13,970	17,526	6,40
07087/07196	22,225	50,050	14,260	9,525	13,495	2,80
1380/1328	22,225	52,388	20,168	14,288	19,368	7,60
1380/1329	22,225	53,975	20,168	14,288	19,368	7,60
1755/1729	22,225	56,896	19,837	15,875	19,368	6,90
1280/1220	22,225	57,150	22,225	17,462	22,225	6,90
1975/1932	22,225	58,738	19,355	15,080	19,050	5,80
2684/2631	22,225	66,421	25,433	19,050	23,812	9,40
LM72849/10	22,606	47,000	15,500	12,000	15,500	3,00
07093/07196	23,812	50,005	14,260	9,525	13,495	2,80
L44640/10	23,812	50,292	14,732	10,668	14,224	3,30
1779/1729	23,812	56,896	19,837	15,875	19,367	6,90
3659/3620	23,812	61,912	30,416	23,812	28,575	11,90
23092/23256	23,812	65,088	21,463	15,875	22,225	2,30
JHM33449/10	24,000	55,000	25,000	21,000	25,000	8,90
07098/07196	24,981	50,005	14,260	9,525	13,495	2,80
17098/17244	24,981	62,000	16,566	14,288	16,002	3,60
07097/07196	25,000	50,005	14,260	9,525	13,495	2,80
07096/07196	25,159	50,005	14,260	9,525	13,495	2,80
07100/07196	25,400	50,005	14,260	9,525	13,495	2,80
L44643/10	25,400	50,292	14,732	10,668	14,224	3,30
L44642/10	25,400	50,292	14,732	10,668	14,224	3,30
07100/07204	25,400	51,994	14,260	12,700	15,011	2,80
1986/1922	25,400	56,896	19,355	15,875	19,368	5,80
M84548/10	25,400	57,150	19,431	14,732	19,845	3,00
1780/1729	25,400	57,150	19,837	15,875	19,431	6,90
M84249/10	25,400	59,530	23,114	18,288	23,368	5,10
15578/15523	25,400	60,325	17,462	15,875	19,842	5,10

- warehouse - order - phone

https://nppnovoteh.com

Weight [kg]	Basic load ratings [kN]		Limiting speed [rpm]		Basic makes*		Bearing No.
	dyn. C	stat. C_0	grease	oil	-	others	
0,08	19,3	17,1	10000	15000	◴	↻	**00050/00150**
0,05	14,1	13,9	10000	15000	◴	↻	**L21549/11**
0,09	22,2	21,3	9500	14000	◴	↻	**03062/03162**
0,1	17,4	17,4	8500	12000	◴	↻	**11590/11520**
0,11	29,1	29,2	9800	13000	◴	↻	**17580/17520**
0,18	37,1	39,3	8200	11000	◴	↻	**HM81649/10**
0,13	24,7	25,4	8600	11000	◴	↻	**05062/05185**
0,2	39,7	40,5	8500	11000	◴	↻	**09062/09195**
0,26	43	42,5	7200	9600	◴	↻	**21063/21212**
0,12	24,7	25,4	8600	11000	◴	↻	**05066/05185**
0,08	22,9	23,4	9000	13000	▬	↻	**LM11749/10**
0,12	30,6	32	8500	12000	▬	↻	**LM11949/10**
0,12	24,7	25,4	8600	11000	◴	↻	**05075/05185**
0,17	39,7	40,5	8000	11000	▬	↻	**09067/09195**
0,18	39,7	40,5	8500	11000	◴	↻	**09067/09194**
0,19	39,7	40,5	8000	11000	◴	↻	**09067/09196**
0,18	39,7	40,5	8000	11000	◴	↻	**09074/09195**
0,18	39,7	40,5	8000	11000	◴	↻	**09078/09195**
0,24	43	42,5	7500	10000	◴	↻	**21075/21212**
0,26	42	45,3	7200	9600	◴	↻	**1775/1729**
0,11	24,7	25,4	8600	11000	◴	↻	**05079/05185**
0,14	27	29,6	7500	10000	◴	↻	**07079/07196**
0,17	39,7	40,5	8000	11000	▬	↻	**09081/09195**
0,18	40,4	43,2	8200	11000	◴	↻	**12580/12520**
0,16	40,8	43,5	8000	11000	▬	↻	**M12649/10**
0,12	30,2	35,3	8000	11000	▬	↻	**LM12749/10**
0,12	30,2	35,3	8000	11000	▬	↻	**LM12749/11**
0,07	15,3	16,8	9000	13000	◴	↻	**LL52549/10**
0,17	40,8	43,5	8000	11000	◴	↻	**M12648/10**
0,12	27	29,6	7500	10000	◴	↻	**07087/07196**
0,2	44,3	48,3	7500	10000	◴	↻	**1380/1328**
0,22	44,3	48,3	7600	10000	◴	↻	**1380/1329**
0,24	42	45,3	7200	9600	◴	↻	**1755/1729**
0,28	51,2	55,1	7100	9500	◴	↻	**1280/1220**
0,26	44,8	50,2	7500	10000	◴	↻	**1975/1932**
0,46	71	81,7	6200	8200	◴	↻	**2684/2631**
0,12	27,5	33	8200	11000	◴	↻	**LM72849/10**
0,12	27	29,6	7500	10000	◴	↻	**07093/07196**
0,12	27,8	32,9	7400	10000	◴	↻	**L44640/10**
0,24	42	45,3	7200	9600	◴	↻	**1779/1729**
0,43	82	89,8	6200	8200	◴	↻	**3659/3620**
0,37	50,6	55,8	5700	7600	◴	↻	**23092/23256**
0,29	62,1	71	6100	8200	◴	↻	**JHM33449/10**
0,11	27	29,6	7500	10000	◴	↻	**07098/07196**
0,25	40	44,1	6700	9000	◴	↻	**17098/17244**
0,11	27	29,6	7500	10000	◴	↻	**07097/07196**
0,11	27	29,6	7500	10000	◴	↻	**07096/07196**
0,11	27	29,6	7500	10000	◴	↻	**07100/07196**
0,12	27,8	32,9	7500	10000	▬	↻	**L44643/10**
0,11	27,8	32,9	7700	11000	◴	↻	**L44642/10**
0,14	27	29,6	7500	10000	◴	↻	**07100/07204**
0,24	42	45,3	6700	8900	◴	↻	**1986/1922**
0,23	44,8	50,2	6700	9000	▬	↻	**M84548/10**
0,23	44,9	52,9	7200	9600	◴	↻	**1780/1729**
0,32	53,8	63,3	6800	9100	▬	↻	**M84249/10**
0,27	42,6	50,1	6700	9000	◴	↻	**15578/15523**

* Other products also available

https://nppnovoteh.com

4. TAPERED ROLLER BEARINGS

4.2. Tapered roller bearings – inch dimensions



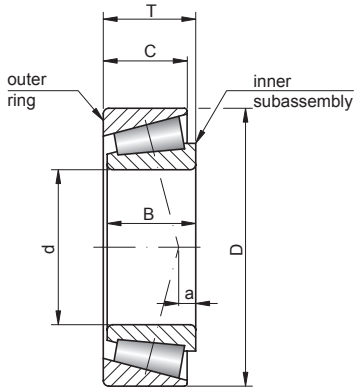

Bearing No.	Dimensions [mm]					
	d	D	B	C	T	a
15101/15243	25,400	61,912	20,638	14,288	19,050	5,80
15100/15245	25,400	62,000	20,638	14,638	19,050	5,80
15101/15244	25,400	62,000	20,638	15,875	20,638	5,80
15101/15245	25,400	62,000	20,638	14,288	19,050	5,80
15102/15245	25,400	62,000	20,638	14,288	19,050	5,80
15101/15250	25,400	63,500	20,638	15,875	20,638	5,80
M86643/10	25,400	64,292	21,433	16,670	21,433	3,30
23100/23256	25,400	65,088	21,463	15,875	22,225	2,30
2687/2631	25,400	66,421	25,433	19,050	23,812	9,40
02473/02420	25,400	68,262	22,225	17,462	22,225	5,10
M88036/11	25,400	68,262	22,225	17,462	22,225	2,80
HM88630/10	25,400	72,233	25,400	19,842	25,400	4,60
3189/3120	25,400	72,626	29,997	23,812	30,162	10,20
15103/15245	26,157	62,000	20,638	14,288	19,050	5,80
2682/2630	26,162	63,100	25,433	19,050	23,812	9,40
2682/2631	26,162	66,421	25,433	19,050	23,812	9,40
1987/1932	26,975	58,738	19,355	15,080	19,050	5,80
L44649/10	26,988	50,292	14,732	10,668	14,224	3,30
15580/15523	26,988	60,325	17,462	15,875	19,842	5,10
15106/15245	26,988	62,000	20,638	14,288	19,050	5,80
2688/2631	26,988	66,421	25,433	19,050	23,812	9,40
J15585/20	28,000	57,150	17,462	13,495	17,462	5,10
1985/1930	28,575	56,896	19,355	15,875	19,845	5,80
15590/15520	28,575	57,150	17,462	13,495	17,462	5,10
1988/1922	28,575	57,150	19,355	15,875	19,845	5,80
1985/1932	28,575	58,738	19,355	15,080	19,050	5,80
1988/1932	28,575	58,738	19,355	15,080	19,050	5,80
15590/15523	28,575	60,325	17,462	15,875	19,842	5,10
1985/1931	28,575	60,325	19,355	15,875	19,845	5,80
15112/15245	28,575	62,000	20,638	14,288	19,050	5,80
15113/15245	28,575	62,000	20,638	14,288	19,050	5,80
M86647/10	28,575	64,292	21,433	16,670	21,433	3,30
2689/2631	28,575	66,421	25,433	19,050	23,812	9,40
02474/02420	28,575	68,262	22,225	17,462	22,225	5,10
2474/2420	28,575	68,262	23,812	17,462	22,225	6,60
2578/2523	28,575	69,850	25,357	19,050	23,812	8,60
26112/26283	28,575	72,000	18,923	15,875	19,000	4,10
26112/26283S	28,575	72,000	18,923	15,875	19,000	4,10
41125/41286	28,575	72,626	24,257	17,462	24,608	4,10
41126/41286	28,575	72,626	24,257	17,462	24,608	4,10
3192/3120	28,575	72,626	29,997	23,812	30,162	10,20
3198/3120	28,575	72,626	29,997	23,812	30,162	10,20
3198/3130	28,575	72,626	29,997	23,812	30,162	10,20
02872/02820	28,575	73,025	22,225	17,462	22,225	3,80
43112/43312	28,575	79,375	24,074	17,462	25,400	2,00
L45449/10	29,000	50,292	14,732	10,668	14,224	3,30
2690/2631	29,367	66,421	25,433	19,050	23,812	9,40
17118/17244	29,987	62,000	16,566	14,288	16,002	3,60
15117/15245	29,987	62,000	20,638	14,288	19,050	5,80
14117A/14276	30,000	69,012	19,583	15,875	19,845	4,30
JHM88540/13	30,000	72,000	27,783	23,020	29,370	5,60
15116/15245	30,112	62,000	20,638	14,288	19,050	5,80
17119/17244	30,162	62,000	16,566	14,288	16,002	3,60
M86649/10	30,162	64,292	21,433	16,670	21,433	3,30
M88043/10	30,162	68,262	22,225	17,462	22,225	2,80
3187/3120	30,162	72,626	29,997	23,812	30,162	10,20

- warehouse - order - phone

https://nppnovoteh.com

Weight [kg]	Basic load ratings [kN]		Limiting speed [rpm]		Basic makes*		Bearing No.
	dyn. C	stat. C_0	grease	oil	-	others	
0,29	46,8	53,9	6100	8200	◴	↻	**15101/15243**
0,29	46,8	53,9	6100	8200	◴	↻	**15100/15245**
0,3	46,8	53,9	6100	8200	◴	↻	**15101/15244**
0,29	46,8	53,9	6000	8000	◴	↻	**15101/15245**
0,29	46,8	53,9	6100	8200	◴	↻	**15102/15245**
0,32	46,8	53,9	6000	8000	◴	↻	**15101/15250**
0,36	55,7	71,7	6100	8100	⬘	↻	**M86643/10**
0,36	50,6	55,8	5700	7600	◴	↻	**23100/23256**
0,44	71	81,7	6200	8200	◴	↻	**2687/2631**
0,43	59,1	70,2	6200	8200	◴	↻	**02473/02420**
0,43	59,6	77,4	6200	8200	◴	↻	**M88036/11**
0,59	71,1	94,2	5500	7300	◴	↻	**HM88630/10**
0,64	87,7	102	5100	6800	◴	↻	**3189/3120**
0,29	46,8	53,9	6700	8900	◴	↻	**15103/15245**
0,38	71	81,7	6500	8500	◴	↻	**2682/2630**
0,43	71	81,7	6200	8200	◴	↻	**2682/2631**
0,24	44,8	50,2	6700	8900	◴	↻	**1987/1932**
0,11	27,8	32,9	7400	9900	⬘	↻	**L44649/10**
0,25	42,6	50,1	6700	8900	◴	↻	**15580/15523**
0,28	46,8	53,9	6100	8200	⬘	↻	**15106/15245**
0,42	71	81,7	6200	8200	◴	↻	**2688/2631**
0,21	42,6	50,1	6700	8900	◴	↻	**J15585/20**
0,21	44,8	50,2	6700	8900	◴	↻	**1985/1930**
0,19	42,6	50,1	6700	8900	◴	↻	**15590/15520**
0,17	44,8	50,2	6700	9000	◴	↻	**1988/1922**
0,22	44,8	50,2	6700	8900	◴	↻	**1985/1932**
0,22	44,8	50,2	6700	8900	◴	↻	**1988/1932**
0,25	42,6	50,1	6700	8900	◴	↻	**15590/15523**
0,25	44,8	50,2	6700	8900	◴	↻	**1985/1931**
0,27	46,8	53,9	6000	8000	◴	↻	**15112/15245**
0,27	46,8	53,9	6100	8200	◴	↻	**15113/15245**
0,34	55,7	71,7	6000	8000	⬘	↻	**M86647/10**
0,41	71	81,7	6200	8200	◴	↻	**2689/2631**
0,4	59,1	70,2	5600	7500	◴	↻	**02474/02420**
0,41	62,6	73,3	5600	7500	◴	↻	**2474/2420**
0,47	77,5	94,4	5700	7600	◴	↻	**2578/2523**
0,38	54,4	60,1	6500	8500	◴	↻	**26112/26283**
0,38	54,4	60,1	6500	8500	◴	↻	**26112/26283S**
0,46	64,6	64,1	5800	7700	◴	↻	**41125/41286**
0,46	64,6	64,1	5800	7700	◴	↻	**41126/41286**
0,61	87,7	102	3700	5000	◴	↻	**3192/3120**
0,61	87,7	102	5400	7100	◴	↻	**3198/3120**
0,62	87,7	102	5400	7100	◴	↻	**3198/3130**
1,04	60,8	74,9	5300	7000	◴	↻	**02872/02820**
0,6	71,9	76,2	4400	5800	◴	↻	**43112/43312**
0,11	27,7	36,2	7200	9600	⬘	↻	**L45449/10**
0,4	71	81,7	6200	8200	◴	↻	**2690/2631**
0,22	40	44,1	6300	8400	◴	↻	**17118/17244**
0,26	46,8	53,9	6100	8200	◴	↻	**15117/15245**
0,36	50,6	61,7	5600	7400	◴	↻	**14117A/14276**
0,61	80,6	111	5400	7100	◴	↻	**JHM88540/13**
0,26	46,8	53,9	6100	8200	◴	↻	**15116/15245**
0,23	40	44,1	6300	8400	◴	↻	**17119/17244**
0,33	55,7	71,7	6000	8000	⬘	↻	**M86649/10**
0,41	59,6	77,4	5600	7500	◴	↻	**M88043/10**
0,59	87,7	102	5500	7300	◴	↻	**3187/3120**

* Other products also available

https://nppnovoteh.com

4. TAPERED ROLLER BEARINGS

4.2. Tapered roller bearings – inch dimensions



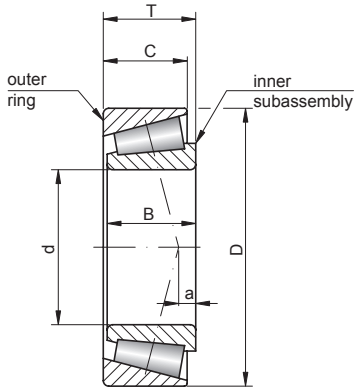

Bearing No.	Dimensions [mm]					
	d	D	B	C	T	a
2558/2523	30,163	69,850	25,357	19,050	23,812	8,60
15118/15245	30,213	62,000	20,638	14,288	19,050	5,80
15119/15245	30,213	62,000	20,638	14,288	19,050	5,80
15120/15245	30,213	62,000	20,638	14,288	19,050	5,80
14116/14274	30,226	69,012	19,583	15,875	19,845	4,30
14116/14276	30,226	69,012	19,583	15,875	19,845	4,30
14116/14283	30,226	72,085	19,583	18,415	22,385	4,30
M86648A/10	30,955	64,292	21,433	16,670	21,433	3,30
08125/08231	31,750	58,738	15,080	10,716	14,684	1,30
LM67048/10	31,750	59,131	16,764	11,811	15,875	3,00
15123/15245	31,750	62,000	19,050	14,288	18,161	4,80
15125/15245	31,750	62,000	20,638	14,288	19,050	5,80
15126/15245	31,750	62,000	20,638	14,288	19,050	5,80
2580/2520	31,750	66,421	25,357	20,638	25,400	8,60
M88046/10	31,750	68,262	22,225	17,462	22,225	2,80
02475/02420	31,750	68,262	22,225	17,462	22,225	5,10
02476/02420	31,750	68,262	22,225	17,462	22,225	5,10
23491/23420	31,750	68,262	26,988	22,225	26,988	8,60
14124/14276	31,750	69,012	19,583	15,875	19,845	4,30
14125A/14276	31,750	69,012	19,583	15,875	19,845	4,30
2580/2523	31,750	69,850	25,357	19,050	23,812	8,60
2580/2523S	31,750	69,850	25,357	19,050	23,812	8,60
2582/2523	31,750	69,850	25,357	19,050	23,812	8,60
3188/3120	31,750	72,626	29,997	23,812	30,162	10,20
3188S/3120	31,750	72,626	29,997	23,812	30,162	10,20
3193/3120	31,750	72,626	29,997	23,812	30,162	10,20
02875/02820	31,750	73,025	22,225	17,462	22,225	3,80
02876/02820	31,750	73,025	22,225	17,462	22,225	3,80
2879/2820	31,750	73,025	23,812	17,462	22,225	5,60
HM88542/10	31,750	73,025	27,783	23,020	29,370	5,60
HM88542/11	31,750	73,025	27,783	23,020	29,370	5,60
HM88542/12	31,750	73,812	27,783	23,020	29,370	5,60
HM89440/10	31,750	76,200	28,575	23,020	29,370	5,60
43125/43312	31,750	79,375	24,074	17,462	25,400	2,00
3476/3420	31,750	79,375	29,771	23,812	29,370	8,60
2585/2520	33,338	66,421	25,357	20,638	25,400	8,60
M88048/10	33,338	68,262	22,225	17,462	22,225	2,80
14130/14274	33,338	69,012	19,583	15,875	19,845	4,30
14130/14276	33,338	69,012	19,583	15,875	19,845	4,30
14131/14276	33,338	69,012	19,583	15,875	19,845	4,30
2581/2523	33,338	69,850	25,357	19,050	23,812	8,60
2585/2523	33,338	69,850	25,357	19,050	23,812	8,60
2585/2523S	33,338	69,850	25,357	19,050	23,812	8,60
26131/26283	33,338	72,000	18,923	15,875	19,000	4,20
3196/3120	33,338	72,626	29,997	23,812	30,162	10,20
HM88547/10	33,338	73,025	27,783	23,020	29,370	5,60
2785/2720	33,338	76,200	25,654	19,050	23,812	8,10
2790/2720	33,338	76,200	25,654	19,050	23,812	8,10
31590/31520	33,338	76,200	28,575	23,812	29,370	7,60
HM89443/10	33,338	76,200	28,575	23,020	29,370	5,60
HM89444/10	33,338	76,200	28,575	23,020	29,370	5,60
43131/43312	33,338	79,375	24,074	17,462	25,400	2,00
43132/43312	33,338	79,375	24,074	17,462	25,400	2,00
44131/44348	33,338	88,500	23,698	17,462	25,400	2,30
LM48548/10	34,925	65,088	18,288	13,970	18,034	3,60
LM48548A/10	34,925	65,088	18,288	13,970	18,034	3,70

- warehouse - order - phone

https://nppnovoteh.com

Weight [kg]	Basic load ratings [kN]		Limiting speed [rpm]		Basic makes*		Bearing No.
	dyn. C	stat. C_0	grease	oil	-	others	
0,46	77,5	94,4	5700	7600	◴	↻	**2558/2523**
0,26	46,8	53,9	6000	8000	◴	↻	**15118/15245**
0,26	46,8	53,9	6100	8200	◴	↻	**15119/15245**
0,26	46,8	53,9	6100	8200	◴	↻	**15120/15245**
0,35	50,6	61,7	5600	7400	◴	↻	**14116/14274**
0,36	50,6	61,7	5600	7400	◴	↻	**14116/14276**
0,44	50,6	61,7	5600	7400	◴	↻	**14116/14283**
0,32	55,7	71,7	6800	9100	◴	↻	**M86648A/10**
0,16	29,3	35	8000	11000	◴	↻	**08125/08231**
0,17	36,5	44,6	6700	9000	⬘	↻	**LM67048/10**
0,23	46,8	53,9	6000	8000	⬘	↻	**15123/15245**
0,24	46,8	53,9	6100	8200	◴	↻	**15125/15245**
0,25	46,8	53,9	6100	8200	◴	↻	**15126/15245**
0,39	77,5	94,4	5600	7500	◴	↻	**2580/2520**
0,4	59,6	77,4	5000	6700	⬘	↻	**M88046/10**
0,37	59,1	70,2	5800	7700	◴	↻	**02475/02420**
0,38	59,1	70,2	5800	7700	◴	↻	**02476/02420**
0,49	74,7	91	5100	6800	◴	↻	**23491/23420**
0,35	50,6	61,7	5600	7400	◴	↻	**14124/14276**
0,34	50,6	61,7	5600	7400	◴	↻	**14125A/14276**
0,44	77,5	94,4	5700	7600	◴	↻	**2580/2523**
0,44	77,5	94,4	5700	7600	◴	↻	**2580/2523S**
0,44	77,5	94,4	5700	7600	◴	↻	**2582/2523**
0,58	87,7	102	5500	7300	◴	↻	**3188/3120**
0,59	87,7	102	5500	7300	◴	↻	**3188S/3120**
0,57	87,7	102	5500	7300	◴	↻	**3193/3120**
0,44	60,8	74,9	5700	7600	◴	↻	**02875/02820**
0,45	60,8	74,9	5300	5700	◴	↻	**02876/02820**
0,46	67,7	83,8	5200	7000	◴	↻	**2879/2820**
0,61	80,6	111	5400	7100	⬘	↻	**HM88542/10**
0,62	80,6	111	5400	7100	◴	↻	**HM88542/11**
0,63	80,6	111	5400	7100	◴	↻	**HM88542/12**
0,68	86,2	119	5100	6800	◴	↻	**HM89440/10**
0,57	71,9	76,2	5000	6700	◴	↻	**43125/43312**
0,74	96,9	119	4900	6600	◴	↻	**3476/3420**
0,39	77,5	94,4	4600	6200	◴	↻	**2585/2520**
0,37	59,6	77,4	5800	7700	◴	↻	**M88048/10**
0,338	48,2	61,3	5600	7500	◴	↻	**14130/14274**
0,33	50,6	61,7	5600	7500	◴	↻	**14130/14276**
0,34	50,6	61,7	5600	7400	◴	↻	**14131/14276**
0,43	77,5	94,4	6200	8200	◴	↻	**2581/2523**
0,42	77,5	94,4	5700	7600	◴	↻	**2585/2523**
0,43	77,5	94,4	6200	8200	◴	↻	**2585/2523S**
0,34	54,4	60,1	5600	7400	◴	↻	**26131/26283**
0,55	87,7	102	5500	7300	◴	↻	**3196/3120**
0,59	80,6	111	5400	7100	◴	↻	**HM88547/10**
0,55	80,4	102	5100	6800	◴	↻	**2785/2720**
0,55	80,4	102	5100	6800	◴	↻	**2790/2720**
0,65	87,7	107	4900	6600	◴	↻	**31590/31520**
0,66	86,2	119	4800	6300	◴	↻	**HM89443/10**
0,66	86,2	119	5100	6800	◴	↻	**HM89444/10**
0,55	71,9	76,2	4600	6200	◴	↻	**43131/43312**
0,56	71,9	76,2	4800	6400	◴	↻	**43132/43312**
0,76	77,9	88,6	3500	4700	◴	↻	**44131/44348**
0,26	50,5	63,1	5700	7600	⬘	↻	**LM48548/10**
0,25	50,5	63,1	5700	7600	◴	↻	**LM48548A/10**

* Other products also available

https://nppnovoteh.com

4. TAPERED ROLLER BEARINGS

4.2. Tapered roller bearings – inch dimensions



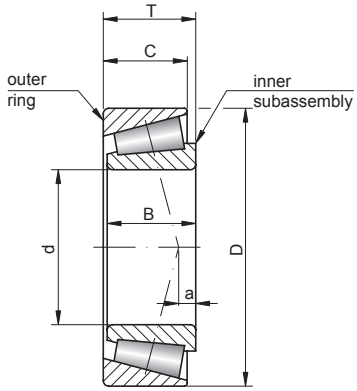

Bearing No.	Dimensions [mm]					
	d	D	B	C	T	a
M38549/10	34,925	66,675	20,638	16,670	20,638	5,60
14585/14525	34,925	68,262	20,638	15,875	20,638	5,80
14137A/14276	34,925	69,012	19,583	15,875	19,845	4,30
14138A/14276	34,925	69,012	19,583	15,875	19,845	4,30
HM88649/10	34,925	72,233	25,400	19,842	25,400	4,60
16137/16284	34,925	72,238	20,638	15,875	20,638	4,10
02877/02820	34,925	73,025	22,225	17,462	22,225	3,80
02878/02820	34,925	73,025	22,225	17,462	22,225	3,80
2878/2820	34,925	73,025	23,812	17,462	22,225	5,60
25877/25820	34,925	73,025	24,608	19,050	23,812	8,10
25877/25821	34,925	73,025	24,608	19,050	23,812	8,10
25878/25821	34,925	73,025	24,608	19,050	23,812	8,10
HM88649A/13	34,925	73,025	25,400	21,443	27,000	4,60
2793/2735X	34,925	73,025	25,654	19,050	23,812	8,10
2793/2720	34,925	76,200	25,654	19,050	23,812	8,10
2786/2720	34,925	76,200	25,654	19,050	23,812	8,10
2793/2729	34,925	76,200	25,654	19,050	23,812	8,10
2796/2720	34,925	76,200	25,654	19,050	23,812	8,10
31593/31520	34,925	76,200	28,575	23,812	29,370	7,60
31594/31520	34,925	76,200	28,575	23,812	29,370	7,60
31594/31521	34,925	76,200	28,575	23,812	29,370	7,60
HM89446/10	34,925	76,200	28,575	23,020	29,370	5,60
36137/36300	34,925	76,200	29,845	23,812	29,370	9,10
3478/3420	34,925	79,375	29,771	23,812	29,370	8,60
28137/28317	34,925	80,035	20,940	15,875	21,433	4,80
3379/3320	34,925	80,167	30,391	23,812	29,370	10,90
3872/3820	34,925	85,725	30,162	23,812	30,162	8,10
449/432	34,925	95,250	29,900	22,225	27,782	9,10
14139/14276	34,976	69,012	19,583	15,875	19,845	4,30
19138/19283	34,976	72,000	16,520	14,288	17,018	1,50
L68149/11	34,988	59,974	16,764	11,938	15,875	2,50
LM78349/10A	34,988	61,973	17,000	13,600	16,700	2,50
LM78349/10C	34,988	61,973	17,000	15,000	18,000	2,50
LM78349A/10A	34,988	61,973	17,000	13,600	16,700	2,50
LM78349A/10C	34,988	61,973	17,000	15,000	18,000	2,50
JS3549A/10	35,000	70,000	23,500	19,000	24,000	3,60
23691/23620	35,000	73,025	26,975	22,225	26,988	8,10
26883/26822	35,000	79,375	25,400	19,050	23,812	7,40
339/332	35,000	80,000	22,403	17,826	21,000	6,20
LM48545/10	35,128	65,088	18,288	13,970	18,034	3,60
HM88648/10	35,717	72,233	25,400	19,842	25,400	4,60
HM88648/11AS	35,717	72,626	25,400	19,842	25,400	4,60
25880/25821	36,487	73,025	24,608	19,050	23,812	8,10
2780/2720	36,487	76,200	25,654	19,050	23,812	8,10
2794/2720	36,487	76,200	25,654	19,050	23,812	8,10
HM89449/10	36,512	76,200	28,575	23,020	29,370	5,60
31597/31520	36,512	76,200	28,575	23,812	29,370	7,60
HM89448/10	36,512	76,200	28,575	23,020	29,370	5,60
HM89449/11	36,512	76,200	28,575	23,020	29,370	5,60
26877/26822	36,512	79,375	25,400	19,050	23,812	7,40
HM89249/10	36,512	79,375	28,829	22,664	29,370	5,80
3479/3420	36,512	79,375	29,771	23,812	29,370	8,60
25570/25520	36,512	82,931	25,400	19,050	23,812	6,40
3878/3820	36,512	85,725	30,162	23,812	30,162	8,10
44143/44348	36,512	88,500	23,698	17,462	25,400	2,30
JL69349/10	38,000	63,000	17,000	13,500	17,000	2,30

- warehouse - order - phone

https://nppnovoteh.com



Weight [kg]	Basic load ratings [kN]		Limiting speed [rpm]		Basic makes*		Bearing No.
	dyn. C	stat. C_0	grease	oil	-	others	
0,32	57,8	72,8	5600	7500	◴	↻	**M38549/10**
0,32	54,8	68,1	5600	7500	◴	↻	**14585/14525**
0,32	50,6	61,7	5600	7500	◴	↻	**14137A/14276**
0,32	50,6	61,7	5600	7500	◴	↻	**14138A/14276**
0,5	71,1	94,2	5400	7200	⬘	↻	**HM88649/10**
0,38	52,4	65,8	5300	7000	◴	↻	**16137/16284**
0,41	60,8	74,9	5300	7000	◴	↻	**02877/02820**
0,42	60,8	74,9	5300	7000	◴	↻	**02878/02820**
0,43	67,7	83,8	5300	7000	◴	↻	**2878/2820**
0,46	78,8	97,4	5300	7000	◴	↻	**25877/25820**
0,46	78,8	97,4	5300	7000	◴	↻	**25877/25821**
0,46	78,8	97,4	5300	7100	◴	↻	**25878/25821**
0,52	71,1	94,2	5400	7200	◴	↻	**HM88649A/13**
0,48	80,4	102	5400	7200	◴	↻	**2793/2735X**
0,53	80,4	102	5100	6800	⬘	↻	**2793/2720**
0,52	80,4	102	5400	7200	◴	↻	**2786/2720**
0,53	80,4	102	5100	6800	◴	↻	**2793/2729**
0,53	80,4	102	5100	6800	◴	↻	**2796/2720**
0,61	87,7	107	5100	6800	◴	↻	**31593/31520**
0,62	87,7	107	5000	6700	◴	↻	**31594/31520**
0,63	87,7	107	5100	6800	◴	↻	**31594/31521**
0,64	86,2	119	5100	6800	◴	↻	**HM89446/10**
0,61	92,5	111	4800	6400	◴	↻	**36137/36300**
0,7	96,9	119	5000	6700	⬘	↻	**3478/3420**
0,5	58,8	68,9	5400	7200	◴	↻	**28137/28317**
0,71	106	129	4800	6400	◴	↻	**3379/3320**
0,9	115	148	4500	6000	◴	↻	**3872/3820**
1,07	118	144	3200	4300	◴	↻	**449/432**
0,32	50,6	61,7	5600	7400	◴	↻	**14139/14276**
0,32	46,9	57,8	5600	7400	◴	↻	**19138/19283**
0,18	35,5	49,3	6000	8000	⬘	↻	**L68149/11**
0,19	39,4	52,4	5900	7900	◴	↻	**LM78349/10A**
0,2	39,4	52,4	5900	7900	◴	↻	**LM78349/10C**
0,2	39,4	52,4	5900	7900	◴	↻	**LM78349A/10A**
0,22	39,4	52,4	5900	7900	◴	↻	**LM78349A/10C**
0,43	66,6	84,9	4700	6300	◴	↻	**JS3549A/10**
0,51	82,8	102	5000	6700	◴	↻	**23691/23620**
0,6	84,3	110	4400	5800	◴	↻	**26883/26822**
0,53	73,6	83,4	4700	6300	◴	↻	**339/332**
0,25	50,5	63,1	5700	7600	◴	↻	**LM48545/10**
0,48	71,1	94,2	5400	7200	◴	↻	**HM88648/10**
0,48	71,1	94,2	5400	7200	◴	↻	**HM88648/11AS**
0,45	78,8	97,4	5300	7000	◴	↻	**25880/25821**
0,52	80,4	102	5100	6800	◴	↻	**2780/2720**
0,51	80,4	102	5000	6700	◴	↻	**2794/2720**
0,62	86,2	119	4800	6300	⬘	↻	**HM89449/10**
0,59	87,7	107	5000	6700	◴	↻	**31597/31520**
0,62	86,2	119	4800	6300	◴	↻	**HM89448/10**
0,63	86,2	119	5100	6800	◴	↻	**HM89449/11**
0,59	84,3	110	5000	6700	◴	↻	**26877/26822**
1,02	98,1	121	5000	6600	◴	↻	**HM89249/10**
0,68	96,9	119	4900	6600	◴	↻	**3479/3420**
0,65	83,8	111	4900	6600	◴	↻	**25570/25520**
0,89	115	148	2900	5600	◴	↻	**3878/3820**
0,72	77,9	88,6	4000	5300	◴	↻	**44143/44348**
0,19	39,8	55	5700	7600	⬘	↻	**JL69349/10**

* Other products also available

https://nppnovoteh.com

4. TAPERED ROLLER BEARINGS

4.2. Tapered roller bearings – inch dimensions



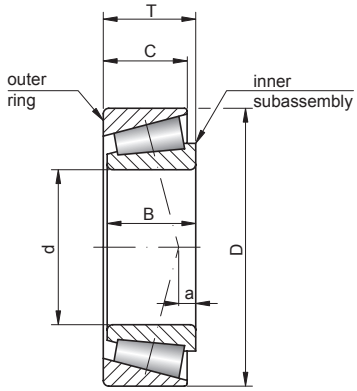

Bearing No.	Dimensions [mm]					
	d	D	B	C	T	a
JL69349A/10	38,000	63,000	17,000	13,500	17,000	2,30
JL69345/10	38,000	63,000	19,000	13,500	17,000	2,30
13889/13830	38,100	63,500	11,908	9,525	12,700	0,80
13889/13836	38,100	65,088	11,908	9,525	12,700	0,80
LM29748/10	38,100	65,088	18,288	13,970	18,034	4,10
LM29749/10	38,100	65,088	18,288	13,970	18,034	4,10
LM29749/11	38,100	65,088	18,288	15,748	19,812	4,10
19150/19268	38,100	68,262	16,520	11,908	15,875	1,50
13685/13621	38,100	69,012	19,050	15,083	19,050	3,00
13687/13620	38,100	69,012	19,050	15,083	19,050	3,00
13687/13621	38,100	69,012	19,050	15,083	19,050	3,00
19150/19281	38,100	71,438	16,520	11,908	15,875	1,50
19150/19283	38,100	72,000	16,520	14,288	17,018	1,50
16150/16282	38,100	72,000	20,638	14,237	19,000	4,10
16150/16284	38,100	72,238	20,638	15,875	20,638	4,10
28150/28300	38,100	76,200	20,940	15,507	20,638	4,80
2776/2720	38,100	76,200	25,654	19,050	23,812	8,10
2777/2720	38,100	76,200	25,654	19,050	23,812	8,10
2788/2720	38,100	76,200	25,654	19,050	23,812	8,10
2788A/2720	38,100	76,200	25,654	19,050	23,812	8,10
26878/26822	38,100	79,375	25,400	19,050	23,812	7,40
3490/3420	38,100	79,375	29,771	23,812	29,370	8,60
28150/28315	38,100	80,000	20,940	15,875	21,006	4,80
27880/27820	38,100	80,035	23,698	18,512	24,608	2,50
27881/27820	38,100	80,035	23,698	18,512	24,608	2,50
3381/3320	38,100	80,167	30,391	23,812	29,370	10,90
HM801346/10	38,100	82,550	28,575	23,020	29,370	4,80
HM801346X/10	38,100	82,550	28,575	23,020	29,370	4,80
25572/25520	38,100	82,931	25,400	19,050	23,812	6,40
3875/3820	38,100	85,725	30,162	23,812	30,162	8,10
3876/3820	38,100	85,725	30,162	23,812	30,162	8,10
3580/3525	38,100	87,312	30,886	23,812	30,162	10,20
44150/44348	38,100	88,500	23,698	17,462	25,400	2,30
418/414	38,100	88,500	29,083	22,225	26,988	9,70
4375/4335	38,100	90,488	40,386	33,338	39,688	15,00
53150/53375	38,100	95,250	28,300	20,638	30,958	0,30
33880/33821	38,100	95,250	28,575	22,225	27,783	7,60
440/432	38,100	95,250	29,900	22,225	27,783	9,10
525/522	38,100	101,600	36,068	26,988	34,925	12,70
J16154/85	39,000	72,014	20,638	16,637	21,400	4,10
18587/18520	39,688	73,025	17,462	12,700	16,667	2,80
2789/2720	39,688	76,200	25,654	19,050	23,812	8,10
3382/3321	39,688	77,534	30,391	23,812	29,370	10,90
26880/26822	39,688	79,375	25,400	19,050	23,812	7,40
26881/26822	39,688	79,375	25,400	19,050	23,812	7,40
3382/3339	39,688	80,035	30,391	23,812	29,370	10,90
3386/3320	39,688	80,167	30,391	23,812	29,370	10,90
3382/3320	39,688	80,167	30,391	23,812	29,370	10,90
3382/3331	39,688	80,167	30,391	23,812	29,370	10,90
3382/3328	39,688	84,138	30,391	23,812	29,370	10,90
44158/44348	39,688	88,500	23,698	17,462	25,400	2,30
28158/28300	40,000	76,200	20,940	15,507	20,638	4,80
344/332	40,000	80,000	22,403	17,826	21,000	6,40
344A/332	40,000	80,000	22,403	17,826	21,000	6,20
350A/354A	40,000	85,000	21,692	17,462	20,638	4,80
JF4049/10	40,000	85,000	32,500	28,000	33,040	10,20

- warehouse - order - phone

https://nppnovoteh.com



Weight [kg]	Basic load ratings [kN]		Limiting speed [rpm]		Basic makes*		Bearing No.
	dyn. C	stat. C_0	grease	oil	-	others	
0,21	39,8	55	6700	8900	◴	↻	**JL69349A/10**
0,2	39,8	55	5900	7900	◓	↻	**JL69345/10**
0,14	25,1	33	5500	7300	◴	↻	**13889/13830**
0,15	25,1	33	5500	7300	◴	↻	**13889/13836**
0,22	45	60,3	5900	7900	◓	↻	**LM29748/10**
0,22	45	60,3	5900	7900	◓	↻	**LM29749/10**
0,24	45	60,3	6100	8200	◓	↻	**LM29749/11**
0,24	46,9	57,8	6100	8200	◴	↻	**19150/19268**
0,28	52,5	67,9	6100	8200	◴	↻	**13685/13621**
0,29	52,5	67,9	5300	7100	◴	↻	**13687/13620**
0,29	52,5	67,9	5300	7100	◴	↻	**13687/13621**
0,27	46,9	57,8	5400	7200	◴	↻	**19150/19281**
0,3	46,9	57,8	5300	7000	◴	↻	**19150/19283**
0,33	52,4	65,8	5300	7000	◴	↻	**16150/16282**
0,35	52,4	65,8	5300	7000	◴	↻	**16150/16284**
0,4	58,8	68,9	5000	6700	◴	↻	**28150/28300**
0,49	80,4	102	5100	6800	◴	↻	**2776/2720**
0,48	80,4	102	5100	6800	◴	↻	**2777/2720**
0,49	80,4	102	5000	6700	◴	↻	**2788/2720**
0,5	80,4	102	5100	6800	◴	↻	**2788A/2720**
0,57	84,3	110	4800	6400	◴	↻	**26878/26822**
0,65	96,9	119	4900	6600	◴	↻	**3490/3420**
0,46	58,8	68,9	5000	6700	◴	↻	**28150/28315**
0,56	72,2	91,1	4800	6400	◴	↻	**27880/27820**
0,55	72,2	91,1	4800	6400	◴	↻	**27881/27820**
0,67	106	129	4000	5300	◴	↻	**3381/3320**
0,76	95,1	130	4700	6000	◓	↻	**HM801346/10**
0,53	95,1	130	4500	6000	◴	↻	**HM801346X/10**
0,64	83,8	111	4500	6000	◴	↻	**25572/25520**
0,87	115	148	4500	6000	◴	↻	**3875/3820**
0,87	115	148	4500	6000	◴	↻	**3876/3820**
0,87	105	134	4400	5900	◴	↻	**3580/3525**
0,71	77,9	88,6	4000	5300	◓	↻	**44150/44348**
0,82	107	124	4800	6300	◴	↻	**418/414**
1,3	155	204	3200	4300	◴	↻	**4375/4335**
1,04	92,8	104	5300	7000	◴	↻	**53150/53375**
1,05	120	161	3700	4900	◴	↻	**33880/33821**
1,03	118	144	2600	3600	◴	↻	**440/432**
1,47	152	192	3000	4000	◴	↻	**525/522**
0,35	52,4	65,8	5300	7000	◴	↻	**J16154/85**
0,29	47	58,1	5300	7100	◴	↻	**18587/18520**
0,47	80,4	102	5000	6700	◴	↻	**2789/2720**
0,61	106	129	4800	6400	◴	↻	**3382/3321**
0,55	84,3	110	4800	6400	◴	↻	**26880/26822**
0,54	84,3	110	4800	6400	◴	↻	**26881/26822**
0,66	106	129	4800	6400	◴	↻	**3382/3339**
0,65	106	129	4800	6400	◓	↻	**3386/3320**
0,65	106	129	4800	6400	◴	↻	**3382/3320**
0,66	106	129	4800	6400	◴	↻	**3382/3331**
0,75	106	129	2700	3500	◴	↻	**3382/3328**
0,68	77,9	88,6	4000	5300	◴	↻	**44158/44348**
0,38	58,8	68,9	5000	6700	◴	↻	**28158/28300**
0,47	73,6	83,4	4700	6300	◴	↻	**344/332**
0,47	73,6	83,4	4700	6300	◴	↻	**344A/332**
0,55	75,8	89,2	4400	5800	◴	↻	**350A/354A**
0,9	127	160	4500	6000	◴	↻	**JF4049/10**

* Other products also available

https://nppnovoteh.com

4. TAPERED ROLLER BEARINGS

4.2. Tapered roller bearings – inch dimensions



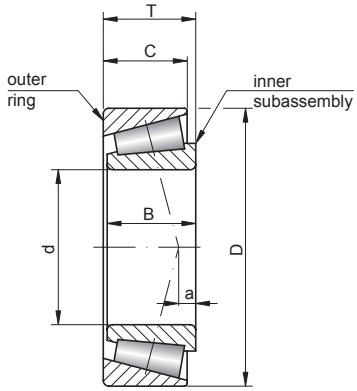

Bearing No.	Dimensions [mm]					
	d	D	B	C	T	a
3879/3820	40,000	85,725	30,162	23,812	30,162	8,10
420/414	40,000	88,500	29,083	22,225	26,988	9,70
543/532X	40,000	107,950	36,957	28,575	36,512	12,20
HM801349/10	40,483	82,550	28,575	23,020	29,370	4,80
LM300849/11	40,988	67,975	18,000	13,500	17,500	3,60
18590/18520	41,275	73,025	17,462	12,700	16,667	2,80
LM501349/10	41,275	73,431	19,812	14,732	19,558	3,30
LM501349/14	41,275	73,431	19,812	16,604	21,430	3,30
11162/11300	41,275	76,200	17,384	14,288	18,009	0,80
24780/24720	41,275	76,200	23,020	17,462	22,225	4,80
26882/26823	41,275	76,200	25,400	20,638	25,400	7,40
26882/26822	41,275	79,375	25,400	19,050	23,812	7,40
26882/26822A	41,275	79,375	25,400	19,050	23,812	7,40
26885/26822	41,275	79,375	25,400	19,050	23,812	7,40
11162/11315	41,275	80,000	17,384	14,288	18,009	0,80
336/332	41,275	80,000	22,403	17,826	21,000	6,20
342/332	41,275	80,000	22,403	17,826	21,000	6,20
26882/26824	41,275	80,000	25,400	19,050	23,812	7,40
26882/26820	41,275	80,167	25,400	19,050	25,400	7,40
M802048/11	41,275	82,550	25,654	20,193	26,543	3,00
3877/3820	41,275	85,725	30,162	23,812	30,162	8,10
3877/3821	41,275	85,725	30,162	23,812	30,162	8,10
3880/3820	41,275	85,725	30,162	23,812	30,162	8,10
3576/3525	41,275	87,312	30,886	23,812	30,162	10,20
3577/3525	41,275	87,312	30,886	23,812	30,162	10,20
3585/3525	41,275	87,312	30,886	23,812	30,162	10,20
44162/44348	41,275	88,500	23,698	17,462	25,400	2,30
419/414	41,275	88,500	29,083	22,225	26,988	9,70
365A/362A	41,275	88,900	22,225	16,513	20,638	4,30
HM803145/10	41,275	88,900	29,370	23,020	30,162	4,30
HM803146/10	41,275	88,900	29,370	23,020	30,162	4,30
HM803146/11	41,275	88,900	29,370	23,020	30,162	4,30
4388/4335	41,275	90,488	40,386	33,338	39,688	15,00
M903345/10	41,275	92,075	23,812	16,670	26,195	3,60
46162/46368	41,275	93,662	31,750	26,195	31,750	7,90
53162/53375	41,275	95,250	28,300	20,638	30,958	0,30
HM903244/10	41,275	95,250	28,300	22,225	30,958	0,50
HM903245/10	41,275	95,250	28,575	22,225	30,958	0,50
HM804840/10	41,275	95,250	29,370	23,020	30,162	3,80
HM807035/10	41,275	104,775	36,512	28,575	36,513	7,40
HM807035/11	41,275	104,775	36,512	28,575	36,513	7,40
4395/4335	42,070	90,488	40,386	33,338	39,688	15,00
12168/12303	42,862	76,992	17,145	11,908	17,462	0,00
22168/22325	42,862	82,550	19,837	15,080	19,842	2,50
22780/22720	42,862	82,550	26,988	20,638	26,195	6,40
25578/25520	42,862	82,931	25,400	19,050	23,812	6,40
3579/3525	42,862	87,312	30,886	23,812	30,162	10,20
26884/26822	42,875	79,375	25,400	19,050	23,812	7,40
26886/26822	42,875	79,375	25,400	19,050	23,812	7,40
342S/332	42,875	80,000	22,403	17,826	21,000	6,40
25577/25520	42,875	82,931	25,400	19,050	23,812	6,40
25577/25522	42,875	83,058	25,400	19,114	23,876	6,40
LL103049/10	44,450	71,438	12,700	9,525	12,700	3,80
L102849/10	44,450	73,025	18,258	15,083	18,258	1,30
12175/12303	44,450	76,992	17,145	11,908	17,462	0,00
18685/18620	44,450	79,375	17,462	13,495	17,462	2,00

https://nppnovoteh.com



Weight [kg]	Basic load ratings [kN]		Limiting speed [rpm]		Basic makes*		Bearing No.
	dyn. C	stat. C_0	grease	oil	-	others	
0,84	115	148	3200	4300	◴	↻	**3879/3820**
0,79	107,5	124	4600	6100	◴	↻	**420/414**
1,74	159	206	3600	4800	◴	↻	**543/532X**
0,73	95,1	130	4700	6200	◴	↻	**HM801349/10**
0,23	46,1	63,5	5300	7000	⏏	↻	**LM300849/11**
0,27	47	58,1	5000	6600	◴	↻	**18590/18520**
0,32	58,4	74,2	5000	6600	⏏	↻	**LM501349/10**
0,34	58,4	74,2	5000	6600	⏏	↻	**LM501349/14**
0,33	44,5	55,1	5000	6700	◴	↻	**11162/11300**
0,41	69,9	89,2	5000	6700	⏏	↻	**24780/24720**
0,48	84,3	110	4800	6400	◴	↻	**26882/26823**
0,52	84,3	110	4800	6400	◴	↻	**26882/26822**
0,52	84,3	110	4800	6400	◴	↻	**26882/26822A**
0,53	84,3	110	4800	6400	◴	↻	**26885/26822**
0,38	44,5	55,1	4900	6500	◴	↻	**11162/11315**
0,46	73,6	83,4	4700	6300	◴	↻	**336/332**
0,45	73,6	83,4	4700	6300	◴	↻	**342/332**
0,53	84,3	110	4800	6400	◴	↻	**26882/26824**
0,55	75,8	89,2	4800	6400	◴	↻	**26882/26820**
0,62	84,9	112	4600	6100	⏏	↻	**M802048/11**
0,82	115	148	4500	6000	◴	↻	**3877/3820**
0,83	115	148	3200	5000	◴	↻	**3877/3821**
0,82	115	148	4500	6000	◴	↻	**3880/3820**
0,82	105	134	4400	5900	◴	↻	**3576/3525**
0,82	105	134	4500	6000	◴	↻	**3577/3525**
0,82	105	134	4500	6000	◴	↻	**3585/3525**
0,67	77,9	88,6	4000	5300	◴	↻	**44162/44348**
0,77	107	124	4800	6300	◴	↻	**419/414**
0,62	79,5	95,8	4800	6300	◴	↻	**365A/362A**
0,9	105	144	4300	5800	⏏	↻	**HM803145/10**
0,89	105	144	4300	5600	◴	↻	**HM803146/10**
0,9	105	144	4300	5800	◴	↻	**HM803146/11**
1,23	155	204	4300	5800	◴	↻	**4388/4335**
0,79	79,2	92,5	4600	5900	◴	↻	**M903345/10**
1,07	120	158	4100	5500	◴	↻	**46162/46368**
0,99	92,8	104	3800	5000	◴	↻	**53162/53375**
1,05	107	132	3700	4900	◴	↻	**HM903244/10**
1,05	107	132	3700	4900	⏏	↻	**HM903245/10**
1,06	115	157	4000	5300	⏏	↻	**HM804840/10**
1,69	159	223	2400	3400	◴	↻	**HM807035/10**
1,7	159	223	2400	3400	◴	↻	**HM807035/11**
1,21	155	204	4300	5800	◴	↻	**4395/4335**
0,31	45,9	58,1	4800	6300	◴	↻	**12168/12303**
0,44	60,5	73,2	4300	7600	◴	↻	**22168/22325**
0,61	86	115	4600	6100	◴	↻	**22780/22720**
0,58	83,8	111	4500	6000	◴	↻	**25578/25520**
0,79	105	134	4400	5900	◴	↻	**3579/3525**
0,5	84,3	110	4800	6400	◴	↻	**26884/26822**
0,51	84,3	110	4800	6400	◴	↻	**26886/26822**
0,43	73,6	83,4	4700	6300	◴	↻	**342S/332**
0,58	83,8	111	4500	6000	◴	↻	**25577/25520**
0,58	83,8	111	4100	5500	◴	↻	**25577/25522**
0,18	33,4	43,6	6000	8000	◴	↻	**LL103049/10**
0,3	52,8	73,8	4700	6300	◴	↻	**L102849/10**
0,3	45,9	58,1	4700	6300	◴	↻	**12175/12303**
0,34	48,2	61,3	4600	6200	◴	↻	**18685/18620**

* Other products also available

https://nppnovoteh.com

4. TAPERED ROLLER BEARINGS

4.2. Tapered roller bearings – inch dimensions



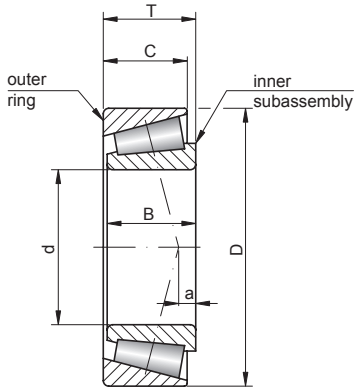

Bearing No.	Dimensions [mm]					
	d	D	B	C	T	a
13175/13318	44,450	80,962	17,462	14,288	19,050	0,80
35176/35326	44,450	82,931	23,012	17,462	22,225	6,10
25580/25520	44,450	82,931	25,400	19,050	23,812	6,40
25581/25520	44,450	82,931	25,400	19,050	23,812	6,40
25582/25520	44,450	82,931	25,400	19,050	23,812	6,40
25580/25522	44,450	83,058	25,400	19,114	23,876	6,40
3578/3520	44,450	84,138	30,886	23,812	30,162	10,20
355/354A	44,450	85,000	21,692	17,462	20,638	4,80
355A/354A	44,450	85,000	21,692	17,462	20,638	4,80
3578/3525	44,450	87,312	30,886	23,812	30,162	10,20
3578/3526	44,450	87,312	30,886	23,812	30,162	10,20
HM803149/10	44,450	88,900	29,370	23,020	30,162	4,30
3782/3720	44,450	93,264	30,302	23,812	30,162	8,10
46175/46368	44,450	93,662	31,750	26,195	31,750	7,80
46176/46368	44,450	93,662	31,750	26,195	31,750	7,80
49175/49368	44,450	93,662	31,750	25,400	31,750	9,10
53176/53375	44,450	95,250	28,300	20,638	30,958	0,30
53176/53377	44,450	95,250	28,300	20,638	30,958	0,30
53177/53375	44,450	95,250	28,300	20,638	30,958	0,30
53178/53375	44,450	95,250	28,300	20,638	30,958	0,30
HM903247/10	44,450	95,250	28,300	22,225	30,958	0,50
HM903249A/10	44,450	95,250	28,300	22,225	30,958	0,50
HM903249/10	44,450	95,250	28,575	22,225	30,958	0,50
33885/33821	44,450	95,250	28,575	22,225	27,783	7,60
33885/33822	44,450	95,250	28,575	22,225	27,783	7,60
HM804842/10	44,450	95,250	29,370	23,020	30,162	3,80
HM804843/10	44,450	95,250	29,370	23,020	30,162	3,80
438/432	44,450	95,250	29,900	22,225	27,783	9,10
438/432A	44,450	95,250	29,900	22,225	27,783	9,10
53176/53387	44,450	98,425	28,300	20,638	30,958	0,30
49576/49520	44,450	101,600	31,750	25,400	31,750	7,10
527/522	44,450	101,600	36,068	26,988	34,926	12,70
5356/5335	44,450	103,188	44,475	36,512	43,658	16,10
460/453X	44,450	104,775	29,317	24,605	30,162	7,10
45280/45220	44,450	104,775	30,958	23,812	30,162	8,10
59175/59412	44,450	104,775	36,512	28,575	36,512	9,70
HM807040/10	44,450	104,775	36,512	28,575	36,512	7,40
535/532X	44,450	107,950	36,957	28,575	36,513	12,20
55175C/55437	44,450	111,125	26,909	20,638	30,162	7,60
55176C/55437	44,450	111,125	26,909	20,638	30,162	7,60
535/532A	44,450	111,125	36,957	30,162	38,100	12,20
6277/6220	44,450	127,000	52,388	41,275	50,800	19,60
25584/25520	44,983	82,931	25,400	19,050	23,812	6,40
3776/3720	44,983	93,264	30,302	23,812	30,162	8,10
HM903248/10	44,988	95,250	28,575	22,225	30,958	0,50
HM905843/10	44,988	104,986	31,750	23,368	32,512	1,80
358/354A	45,000	85,000	21,692	17,462	20,638	4,80
367/362A	45,000	88,900	22,225	16,513	20,638	4,30
JW4549/10	45,000	95,000	26,500	20,000	29,000	4,00
3586/3525	45,237	87,312	30,886	23,812	30,162	10,20
LM102949/10	45,242	73,431	19,812	15,748	19,558	4,60
LM603049/11	45,242	77,788	19,842	15,080	19,842	2,30
LM603049/12	45,242	77,788	19,842	16,667	21,430	2,30
LM603049/14	45,242	80,000	19,842	15,080	19,842	2,30
25590/25519	45,618	82,550	25,400	19,050	23,812	6,40
25590/25520	45,618	82,931	25,400	19,050	23,812	6,40

- warehouse - order - phone



Weight [kg]	Basic load ratings [kN]		Limiting speed [rpm]		Basic makes*		Bearing No.
	dyn. C	stat. C_0	grease	oil	-	others	
0,39	47	61,1	4600	6200			13175/13318
0,49	76,6	89,2	4100	5500			35176/35326
0,55	83,8	111	4500	6000			25580/25520
0,56	83,8	111	4500	6000			25581/25520
0,55	83,8	111	4500	6000			25582/25520
0,56	83,8	111	4500	6000			25580/25522
0,68	105	134	4400	5900			3578/3520
0,5	75,8	89,2	4400	5800			355/354A
0,5	75,8	89,2	4400	5800			355A/354A
0,76	105	134	4500	6000			3578/3525
0,77	105	134	4400	5900			3578/3526
0,84	105	144	4300	5800			HM803149/10
0,95	113	153	4000	5300			3782/3720
1,01	120	158	4100	5500			46175/46368
1,01	120	158	4100	5500			46176/46368
1	126	156	3600	4800			49175/49368
0,95	92,8	104	3800	5000			53176/53375
0,94	92,8	104	3800	4300			53176/53377
0,94	92,8	104	3800	5000			53177/53375
0,94	92,8	104	3800	5000			53178/53375
1	107	132	3600	4800			HM903247/10
1	107	132	3700	4900			HM903249A/10
1	107	132	3700	4900			HM903249/10
0,96	120	161	3900	5200			33885/33821
0,98	120	161	4000	5300			33885/33822
1,02	115	157	4000	5300			HM804842/10
1,01	115	157	5000	5500			HM804843/10
0,92	118	144	4300	5600			438/432
0,93	118	144	4300	5600			438/432A
1,03	92,8	104	2700	3600			53176/53387
1,23	123	155	4300	5800			49576/49520
1,35	152	192	3800	5000			527/522
1,86	197	267	3100	4100			5356/5335
1,27	126	166	3500	4700			460/453X
1,33	142	189	3500	4700			45280/45220
1,53	158	202	3200	4200			59175/59412
1,62	159	223	3600	4800			HM807040/10
1,67	159	206	3600	4800			535/532X
1,44	118	161	3200	4200			55175C/55437
1,44	118	161	3200	4200			55176C/55437
1,84	159	206	3000	4000			535/532A
3,54	283	370	3200	4300			6277/6220
0,55	83,8	111	4500	6000			25584/25520
0,94	113	153	4000	5300			3776/3720
0,99	107	132	2700	3600			HM903248/10
1,38	125	171	3200	4300			HM905843/10
0,5	75,8	89,2	4400	5800			358/354A
0,58	79,5	95,8	4100	5500			367/362A
0,91	92,5	114	4000	5300			JW4549/10
0,75	105	134	4400	5900			3586/3525
0,31	56,9	81,8	4800	6400			LM102949/10
0,36	59,6	77,9	4800	6300			LM603049/11
0,37	59,6	77,9	4600	6200			LM603049/12
0,39	59,6	77,9	4600	6200			LM603049/14
0,53	83,8	111	4500	600			25590/25519
0,54	83,8	111	4500	6000			25590/25520

* Other products also available

https://nppnovoteh.com

4. TAPERED ROLLER BEARINGS

4.2. Tapered roller bearings – inch dimensions



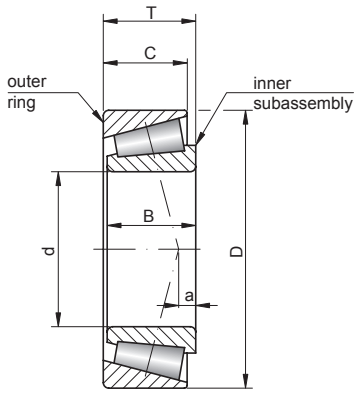

Bearing No.	Dimensions [mm]					
	d	D	B	C	T	a
25590/25523	45,618	82,931	25,400	22,225	26,988	6,40
25590/25521	45,618	83,058	25,400	19,050	23,812	6,40
25590/25522	45,618	83,058	25,400	19,114	23,877	6,40
25590/25526	45,618	85,000	25,400	19,050	23,812	6,40
LM503349/10	45,987	74,976	18,000	14,000	18,000	2,00
LM503349A/10	45,987	74,976	18,000	14,000	18,000	2,00
HM204049/10	45,987	90,975	32,000	26,500	32,000	9,70
18690/18620	46,038	79,375	17,462	13,495	17,462	2,00
13181/13318	46,038	80,962	17,462	14,288	19,050	0,80
25592/25520	46,038	82,931	25,400	19,050	23,812	6,40
18780/18720	46,038	85,000	17,462	19,050	17,462	6,40
359A/354A	46,038	85,000	21,692	17,462	20,638	4,80
359S/354A	46,038	85,000	21,692	17,462	20,638	4,80
2984/2924	46,038	85,000	25,608	20,638	25,400	6,40
359S/352	46,038	90,119	21,692	21,808	23,000	4,80
3777/3720	46,038	93,264	30,302	23,812	30,162	8,10
436/432	46,038	95,250	29,900	22,225	27,783	9,10
369A/362A	47,625	88,900	22,225	16,513	20,638	4,30
369S/362A	47,625	88,900	22,225	16,513	20,638	4,30
M804048/10	47,625	88,900	25,400	19,050	25,400	1,80
M804049/10	47,625	88,900	25,400	19,050	25,400	1,80
3778/3720	47,625	93,264	30,302	23,812	30,162	8,10
3779/3720	47,625	93,264	30,302	23,812	30,162	8,10
HM804846/10	47,625	95,250	29,370	23,020	30,162	3,80
386A/382A	47,625	96,838	21,946	15,875	21,000	3,00
528/522	47,625	101,600	36,068	26,988	34,925	12,70
463/453X	47,625	104,775	29,317	24,605	30,162	7,10
467/453X	47,625	104,775	29,317	24,605	30,162	7,10
45282/45220	47,625	104,775	30,958	23,812	30,162	8,10
55187C/55437	47,625	111,125	26,909	20,638	30,162	7,60
55187C/55443	47,625	112,712	26,909	20,638	30,162	7,60
72188C/72487	47,625	123,825	32,791	25,400	36,512	2,00
HM804848/10	48,412	95,250	29,370	23,020	30,162	3,80
HM804848/11	48,412	95,250	29,370	23,020	30,162	3,80
HM804848A/10	48,412	95,250	29,370	23,020	30,162	3,80
HM804849/10	48,412	95,250	29,370	23,020	30,162	3,80
365S/362A	49,212	88,900	22,225	16,513	20,638	4,30
3781/3720	49,212	93,264	30,302	23,812	30,162	8,10
5395/5335	49,212	103,188	44,475	36,512	43,658	16,00
HM807044/10	49,212	104,775	36,512	28,575	36,512	7,40
65390/65320	49,212	114,300	44,450	34,925	44,450	12,40
HH506348/10	49,212	114,300	44,450	36,068	44,450	13,50
LM104947A/11	49,987	82,550	22,225	16,510	21,590	5,80
28579/28520	49,987	89,980	25,400	19,987	24,750	4,80
28579/28521	49,987	92,075	25,400	19,845	24,608	4,80
HH506349/10	49,987	114,300	44,450	36,068	44,450	13,50
JLM104948/10	50,000	82,000	21,500	17,000	21,500	5,30
JLM704649/10	50,000	84,000	22,000	17,500	22,000	2,30
365/362A	50,000	88,900	22,225	16,513	20,638	4,30
366/362A	50,000	88,900	22,225	16,513	20,638	4,30
JM205149/10	50,000	90,000	28,000	23,000	28,000	7,60
JM205149A/10	50,000	90,000	28,000	23,000	28,000	7,60
JW5049/10	50,000	105,000	29,000	22,000	32,000	4,30
JHM807045/12	50,000	105,000	36,000	29,000	37,000	7,40
396/394A	50,000	110,000	21,996	18,824	22,000	0,80
LL205449/10	50,800	77,788	12,700	9,525	12,700	0,00

- warehouse - order - phone

https://nppnovoteh.com



Weight [kg]	Basic load ratings [kN]		Limiting speed [rpm]		Basic makes*		Bearing No.
	dyn. C	stat. C_0	grease	oil	-	others	
0,58	83,8	111	4500	6000	◴	↻	**25590/25523**
0,53	83,8	111	4500	6000	◴	↻	**25590/25521**
0,54	83,8	111	4500	6000	◴	↻	**25590/25522**
0,57	83,8	111	4500	6000	◴	↻	**25590/25526**
0,3	52,6	75,4	4800	6300	⏏	↻	**LM503349/10**
0,29	52,6	75,4	4700	6300	◴	↻	**LM503349A/10**
0,94	133	172	4300	5600	◴	↻	**HM204049/10**
0,33	48,2	61,3	4800	6300	⏏	↻	**18690/18620**
0,37	47	61,1	4600	6200	◴	↻	**13181/13318**
0,53	83,8	111	4500	6000	◴	↻	**25592/25520**
0,42	60,8	74,9	5300	7000	◴	↻	**18780/18720**
0,48	75,8	89,2	4400	5800	◴	↻	**359A/354A**
0,48	75,8	89,2	4400	5800	◴	↻	**359S/354A**
0,6	86,4	117	4400	5800	◴	↻	**2984/2924**
0,64	75,8	89,2	4400	5800	◴	↻	**359S/352**
0,93	113	153	4000	5300	◴	↻	**3777/3720**
0,9	118	144	4200	5600	◴	↻	**436/432**
0,54	79,5	95,8	4100	5500	◴	↻	**369A/362A**
0,54	79,5	95,8	4100	5500	◴	↻	**369S/362A**
0,66	91,3	116	4200	5600	◴	↻	**M804048/10**
0,65	91,3	116	4200	5600	◴	↻	**M804049/10**
0,88	113	153	4000	5300	◴	↻	**3778/3720**
0,9	113	153	4000	5300	◴	↻	**3779/3720**
0,96	115	157	4000	5300	◴	↻	**HM804846/10**
0,72	84,2	108	3800	5500	◴	↻	**386A/382A**
1,29	152	192	3800	5000	◴	↻	**528/522**
1,21	126	166	3500	4700	◴	↻	**463/453X**
1,22	126	166	3500	4700	◴	↻	**467/453X**
1,26	142	189	3500	4700	◴	↻	**45282/45220**
1,39	118	161	3200	4200	◴	↻	**55187C/55437**
1,47	118	161	3000	4000	◴	↻	**55187C/55443**
2,25	167	208	2900	3900	◴	↻	**72188C/72487**
0,95	115	157	4000	5300	◴	↻	**HM804848/10**
0,96	115	157	4000	5300	◴	↻	**HM804848/11**
0,95	115	157	4000	5300	◴	↻	**HM804848A/10**
0,95	115	157	4000	5300	◴	↻	**HM804849/10**
0,53	79,5	95,8	4100	5500	◴	↻	**365S/362A**
0,87	113	153	4000	5300	⏏	↻	**3781/3720**
1,73	197	267	3800	5000	◴	↻	**5395/5335**
1,52	159	223	3600	4800	◴	↻	**HM807044/10**
2,18	207	256	3600	4800	◴	↻	**65390/65320**
2,34	228	290	3500	4700	◴	↻	**HH506348/10**
0,44	75,2	104	4300	5700	◴	↻	**LM104947A/11**
0,66	91,6	130	4000	5300	◴	↻	**28579/28520**
0,71	91,6	130	4000	5300	◴	↻	**28579/28521**
2,32	228	290	3500	4700	◴	↻	**HH506349/10**
0,41	75,2	104	4300	5700	⏏	↻	**JLM104948/10**
0,45	75,2	104	4300	5700	◴	↻	**JLM704649/10**
0,51	79,5	95,8	4100	5500	◴	↻	**365/362A**
0,51	79,5	95,8	4100	5500	◴	↻	**366/362A**
0,74	115	154	4100	5400	◴	↻	**JM205149/10**
0,73	115	154	4100	5400	◴	↻	**JM205149A/10**
1,21	111	138	3500	4700	◴	↻	**JW5049/10**
1,52	159	223	3600	4800	◴	↻	**JHM807045/12**
1,04	91,6	126	3200	4300	◴	↻	**396/394A**
0,19	34,6	47,2	5700	7600	◴	↻	**LL205449/10**

* Other products also available

https://nppnovoteh.com

4. TAPERED ROLLER BEARINGS

4.2. Tapered roller bearings – inch dimensions



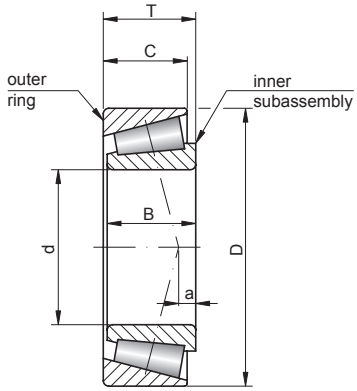

Bearing No.	Dimensions [mm]					
	d	D	B	C	T	a
L305649/10	50,800	80,962	18,258	14,288	18,258	2,50
LM104949/11	50,800	82,550	22,225	16,510	21,590	5,80
LM104949/12	50,800	82,931	22,225	16,510	21,590	5,80
18790/18720	50,800	85,000	17,462	13,495	17,462	0,80
18200/18337	50,800	85,725	18,263	12,700	19,050	1,90
18790/18724	50,800	88,900	17,462	13,495	17,462	0,80
368/362	50,800	88,900	22,225	16,513	20,638	4,30
368A/362A	50,800	88,900	22,225	16,513	20,638	4,30
370A/362A	50,800	88,900	22,225	16,513	20,638	4,30
368A/362	50,800	90,000	22,225	16,513	20,000	4,30
368A/363	50,800	90,000	22,225	20,000	20,000	4,30
28580/28521	50,800	92,075	25,400	19,845	24,608	4,80
28580A/28521	50,800	92,075	25,400	19,845	24,608	4,80
375/374	50,800	93,264	22,225	15,083	20,638	3,80
3775/3720	50,800	93,264	30,302	23,812	30,162	8,10
3780/3720	50,800	93,264	30,302	23,812	30,162	8,10
3780/3730	50,800	93,264	30,302	23,812	30,162	8,10
3784/3720	50,800	93,264	30,302	23,812	30,162	8,10
33889/33821	50,800	95,250	28,575	22,225	27,783	7,60
3780/3726	50,800	95,250	30,302	23,812	30,162	8,10
385A/382A	50,800	96,838	21,946	15,875	21,000	3,00
385AX/382A	50,800	96,838	21,946	15,875	21,000	3,00
28678/28622	50,800	97,630	24,608	19,446	24,608	3,30
3780/3732	50,800	98,425	30,302	23,812	30,162	8,10
49585/49520	50,800	101,600	31,750	25,400	31,750	7,10
529/522	50,800	101,600	36,068	26,988	34,925	12,70
529X/522	50,800	101,600	36,068	26,988	34,925	12,70
455/453X	50,800	104,775	29,317	24,605	30,162	7,10
455S/453X	50,800	104,775	29,317	24,605	30,162	7,10
45284/45220	50,800	104,775	30,958	23,812	30,162	8,10
45285A/45220	50,800	104,775	30,958	23,812	30,162	8,10
45485/45220	50,800	104,775	30,958	23,812	30,162	8,10
59200/59412	50,800	104,775	36,512	28,575	36,512	9,70
59201/59412	50,800	104,775	36,512	28,575	36,512	9,70
HM807046/10	50,800	104,775	36,512	28,575	36,512	7,40
4580/4535	50,800	104,775	40,157	33,338	39,688	12,40
537/532X	50,800	107,950	36,957	28,575	36,512	12,20
398/394A	50,800	110,000	21,996	18,824	22,000	0,80
55200C/55437	50,800	111,125	26,909	20,638	30,162	7,60
HM907643/14	50,800	111,125	28,575	20,638	30,162	7,50
537/532A	50,800	111,125	36,957	30,162	38,100	12,20
55200C/55443	50,800	112,712	26,909	20,638	30,162	7,60
3975/3920	50,800	112,712	30,048	23,812	30,162	4,60
39573/39520	50,800	112,712	30,162	23,812	30,162	6,60
39575/39520	50,800	112,712	30,162	23,812	30,162	6,60
65395/65320	50,800	114,300	44,450	34,925	44,450	12,40
66200/66462	50,800	117,475	31,750	23,812	33,338	0,30
619/612	50,800	120,650	41,275	31,750	41,275	14,00
72200C/72487	50,800	123,825	32,791	25,400	35,450	2,00
72201C/72487	50,800	123,825	32,791	25,400	35,451	2,00
555/552A	50,800	123,825	36,678	30,162	38,100	9,40
65200/65500	50,800	127,000	44,450	34,925	44,450	9,40
368S/362A	51,592	88,900	22,225	16,513	20,638	4,30
28584/28521	52,388	92,075	25,400	19,845	24,608	4,80
3767/3720	52,388	93,264	30,302	23,812	30,162	8,10
33890/33821	52,388	95,250	28,575	22,225	27,783	7,60

- warehouse - order - phone

https://nppnovoteh.com

Weight [kg]	Basic load ratings [kN]		Limiting speed [rpm]		Basic makes*		Bearing No.
	dyn. C	stat. C_0	grease	oil	-	others	
0,34	56,3	88,8	4600	6200	◴	↻	**L305649/10**
0,42	75,2	104	4300	5700	◴	↻	**LM104949/11**
0,42	75,2	104	4300	5700	◴	↻	**LM104949/12**
0,36	50,6	67,5	4200	5600	⬒	↻	**18790/18720**
0,39	47,8	63,9	5600	7500	◴	↻	**18200/18337**
0,42	50,6	67,5	4200	5600	◴	↻	**18790/18724**
0,5	75,8	89,2	4300	5600	◴	↻	**368/362**
0,5	79,5	95,8	4300	5600	◴	↻	**368A/362A**
0,49	79,5	95,8	4100	5500	◴	↻	**370A/362A**
0,51	79,5	95,8	4300	5600	◴	↻	**368A/362**
0,54	79,5	95,8	4100	5500	◴	↻	**368A/363**
0,69	91,6	130	4000	5300	◴	↻	**28580/28521**
0,7	91,6	130	5000	6700	◴	↻	**28580A/28521**
0,59	81,4	101	3000	4000	◴	↻	**375/374**
0,85	113	153	4000	5300	◴	↻	**3775/3720**
0,84	113	153	4000	5300	◴	↻	**3780/3720**
0,85	113	153	4000	5300	◴	↻	**3780/3730**
0,82	113	153	4000	5300	◴	↻	**3784/3720**
0,85	120	161	3900	5200	◴	↻	**33889/33821**
0,89	113	153	4000	5300	◴	↻	**3780/3726**
0,67	84,2	108	3700	5000	◴	↻	**385A/382A**
0,68	84,2	108	3700	5000	◴	↻	**385AX/382A**
0,83	96,3	142	3800	5000	◴	↻	**28678/28622**
0,98	113	153	4000	5300	◴	↻	**3780/3732**
1,11	123	155	3700	5000	◴	↻	**49585/49520**
1,23	152	192	3800	5000	◴	↻	**529/522**
1,22	152	192	3800	5000	◴	↻	**529X/522**
1,17	126	166	3500	4700	⬒	↻	**455/453X**
1,16	126	166	3500	4700	◴	↻	**455S/453X**
1,19	142	189	3600	4800	◴	↻	**45284/45220**
1,21	142	189	3500	4700	◴	↻	**45285A/45220**
1,21	142	189	3500	4700	◴	↻	**45485/45220**
1,39	158	202	3700	4900	◴	↻	**59200/59412**
1,4	158	202	2400	3400	◴	↻	**59201/59412**
1,49	159	223	3400	4500	◴	↻	**HM807046/10**
1,61	167	237	1800	2600	◴	↻	**4580/4535**
1,52	159	206	3600	4800	⬒	↻	**537/532X**
1,03	91,6	126	2600	3600	◴	↻	**398/394A**
1,34	118	161	3200	4300	◴	↻	**55200C/55437**
1,34	114	153	3000	4000	◴	↻	**HM907643/14**
1,7	159	206	3600	4800	◴	↻	**537/532A**
1,39	118	161	3200	4300	◴	↻	**55200C/55443**
1,49	129	191	3200	4300	◴	↻	**3975/3920**
1,52	155	224	3200	4200	◴	↻	**39573/39520**
1,49	155	224	3200	4200	◴	↻	**39575/39520**
2,14	207	256	2400	3200	◴	↻	**65395/65320**
1,64	138	166	3300	4400	◴	↻	**66200/66462**
2,26	192	244	3300	4400	◴	↻	**619/612**
2,19	167	208	2900	3900	◴	↻	**72200C/72487**
2,19	167	208	2900	3900	◴	↻	**72201C/72487**
2,3	177	248	3000	4100	◴	↻	**555/552A**
2,87	225	297	2300	3100	◴	↻	**65200/65500**
0,49	79,5	95,8	4100	5500	◴	↻	**368S/362A**
0,66	91,6	130	4000	5300	◴	↻	**28584/28521**
0,81	113	153	4000	5300	◴	↻	**3767/3720**
0,82	120	161	3900	5200	◴	↻	**33890/33821**

* Other products also available



https://nppnovoteh.com

4. TAPERED ROLLER BEARINGS

4.2. Tapered roller bearings – inch dimensions



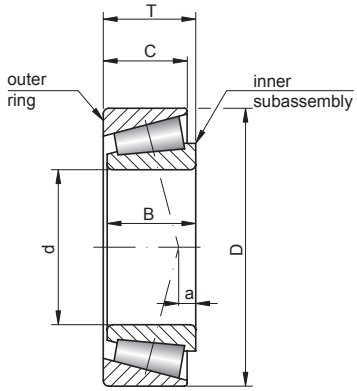

Bearing No.	Dimensions [mm]					
	d	D	B	C	T	a
33891/33821	52,388	95,250	28,575	22,225	27,783	7,60
468/453X	52,388	104,775	29,317	24,605	30,162	7,10
55206C/55437	52,388	111,125	26,909	20,638	30,162	7,60
LM805549/10	53,975	88,900	19,050	22,225	19,050	7,60
33895/33822	53,975	95,250	28,575	22,225	27,783	7,60
33895/33821	53,975	95,250	28,575	22,225	27,783	7,60
389A/382A	53,975	96,838	21,946	15,875	21,000	3,00
456/453X	53,975	104,775	29,317	24,605	30,162	7,10
45287/45220	53,975	104,775	30,958	23,812	30,162	8,10
HM807049/10	53,975	104,775	36,512	28,575	36,512	7,40
HM807049A/10	53,975	104,775	36,512	28,575	36,512	7,40
4595/4535	53,975	104,775	40,157	33,338	39,688	12,30
539/532X	53,975	107,950	36,957	28,575	36,512	12,20
539A/532X	53,975	107,950	36,957	28,575	36,512	12,20
55212C/55434	53,975	109,985	26,909	19,726	28,217	7,60
539/532A	53,975	111,125	36,957	30,162	38,100	12,20
39578/39520	53,975	112,712	30,162	23,812	30,162	6,60
66212/66462	53,975	117,475	31,750	23,812	33,338	0,30
621/612	53,975	120,650	41,275	31,750	41,275	14,00
66584/66520	53,975	122,238	31,750	23,812	33,338	2,00
5578/5535	53,975	122,238	43,764	36,512	43,658	12,20
72212C/72487	53,975	123,825	32,791	25,400	36,512	2,00
557S/552A	53,975	123,825	36,678	30,162	38,100	9,40
65212/65500	53,975	127,000	44,450	34,925	44,450	9,40
6280/6220	53,975	127,000	52,388	41,275	50,800	19,60
HM911242/10	53,975	130,175	33,338	23,812	36,512	5,30
636/632	53,975	136,525	41,275	31,750	41,275	11,20
78214C/78551	53,975	140,030	33,236	23,520	36,512	8,40
78215C/78551	53,975	140,030	33,236	23,520	36,512	8,40
HM807048/10	54,488	104,775	36,512	28,575	36,513	7,40
466/453X	54,988	104,775	29,317	24,605	30,162	7,10
6381/6320	54,988	135,755	56,007	44,450	53,975	19,30
JLM506849/10	55,000	90,000	23,000	18,500	23,000	2,80
JM207049/10	55,000	95,000	29,000	23,500	29,000	7,60
JM207049A/10	55,000	95,000	29,000	23,500	29,000	7,60
385/382A	55,000	96,838	21,946	15,875	21,000	3,00
385X/382A	55,000	96,838	21,946	15,875	21,000	3,00
JH307749/10	55,000	110,000	39,000	32,000	39,000	11,70
JW5549/10	55,000	115,000	31,000	23,500	34,000	5,80
475/472	55,000	120,000	29,007	24,237	29,794	4,10
28680/28622	55,562	97,630	24,608	19,446	24,608	3,40
72218C/72487	55,562	123,825	32,791	25,400	36,512	2,00
HM813840/10	55,562	127,000	36,512	26,988	36,512	3,80
389/382A	55,575	96,838	21,946	15,875	21,000	3,00
L507949/10	57,150	87,312	18,258	14,288	18,258	0,80
387/382	57,150	96,838	21,946	15,875	21,000	3,00
387A/382A	57,150	96,838	21,946	15,875	21,000	3,00
387A/382S	57,150	96,838	21,946	20,274	25,400	3,00
387AS/382A	57,150	96,838	21,946	15,875	21,000	3,00
387S/382A	57,150	96,838	21,946	15,875	21,000	3,00
28682/28622	57,150	97,630	24,608	19,446	24,608	3,30
387A/382	57,150	98,425	21,946	17,826	21,000	3,00
387A/383A	57,150	100,000	21,946	17,826	21,000	3,00
462/453X	57,150	104,775	29,317	24,605	30,162	7,10
469/453X	57,150	104,775	29,317	24,605	30,162	7,10
45289/45220	57,150	104,775	30,958	23,812	30,162	8,10

https://nppnovoteh.com



Weight [kg]	Basic load ratings [kN]		Limiting speed [rpm]		Basic makes*		Bearing No.
	dyn. C	stat. C_0	grease	oil	-	others	
0,84	120	161	3900	5200			33891/33821
1,12	126	166	3700	5000			468/453X
1,31	118	161	2100	2800			55206C/55437
0,42	75,2	104	4300	5700			LM805549/10
0,79	120	161	3900	5200			33895/33822
0,79	120	161	3900	5200			33895/33821
0,63	84,2	108	3700	5000			389A/382A
1,1	126	166	2900	3800			456/453X
1,15	142	189	3500	4700			45287/45220
1,41	159	223	3400	4500			HM807049/10
1,42	159	223	3400	4500			HM807049A/10
1,54	167	237	2400	3400			4595/4535
1,44	159	206	3600	4800			539/532X
1,43	159	206	3600	4800			539A/532X
1,24	118	161	3200	4300			55212C/55434
1,61	159	206	3600	4800			539/532A
1,45	155	224	3600	4800			39578/39520
1,58	138	166	1600	2100			66212/66462
2,18	192	244	3200	4300			621/612
1,78	143	178	3100	4200			66584/66520
2,59	219	327	3100	4100			5578/5535
2,12	167	208	2900	3900			72212C/72487
2,22	177	248	3000	4100			557S/552A
2,86	225	297	3000	4000			65212/65500
3,24	283	370	2200	3200			6280/6220
2,22	154	183	2700	3600			HM911242/10
3,1	216	298	2400	3200			636/632
2,75	185	234	2600	3400			78214C/78551
2,74	185	234	2600	3400			78215C/78551
1,4	159	223	3600	4800			HM807048/10
1,08	126	166	4100	5500			466/453X
4,03	298	404	2300	3100			6381/6320
0,55	85	123	3900	5300			JLM506849/10
0,84	121	168	3800	5100			JM207049/10
0,81	121	168	3800	5100			JM207049A/10
0,61	84,2	108	3700	5000			385/382A
0,61	84,2	108	3700	5000			385X/382A
1,69	194	251	2400	3400			JH307749/10
1,58	135	175	2400	3400			JW5549/10
1,64	133	186	3300	4400			475/472
0,75	96,3	142	3700	4900			28680/28622
2,08	167	208	2900	3900			72218C/72487
2,73	179	256	2900	3800			HM813840/10
0,6	84,2	108	3700	5000			389/382A
0,38	58,1	95,6	4900	6500			L507949/10
0,58	83,8	108	3800	5000			387/382
0,57	84,2	108	3800	5000			387A/382A
0,64	84,2	108	3800	5000			387A/382S
0,56	84,2	108	3800	5000			387AS/382A
0,58	84,2	108	3800	5000			387S/382A
0,73	96,3	142	3700	4900			28682/28622
0,62	84,2	108	3800	5000			387A/382
0,65	84,2	108	3800	5000			387A/383A
1,04	126	166	3600	4800			462/453X
1,03	126	166	2700	3600			469/453X
1,08	142	189	3500	4700			45289/45220

* Other products also available

https://nppnovoteh.com

4. TAPERED ROLLER BEARINGS

4.2. Tapered roller bearings – inch dimensions



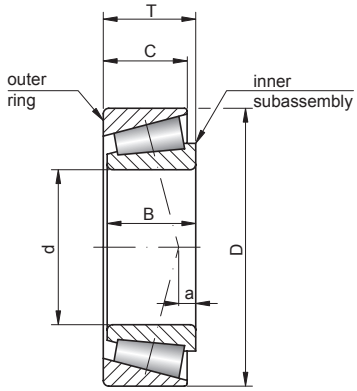

Bearing No.	Dimensions [mm]					
	d	D	B	C	T	a
45290/45220	57,150	104,775	30,958	23,812	30,162	8,10
45291/45220	57,150	104,775	30,958	23,812	30,162	8,10
45291/45221	57,150	104,775	30,958	23,812	30,162	8,10
469/453A	57,150	107,950	29,317	22,225	27,783	7,10
390/394A	57,150	110,000	21,996	18,824	22,000	0,80
469/454	57,150	110,000	29,317	27,000	27,795	7,10
3979/3920	57,150	112,712	30,048	23,812	30,162	4,60
39580/39520	57,150	112,712	30,162	23,812	30,162	6,60
39581/39520	57,150	112,712	30,162	23,812	30,162	6,60
33225/33462	57,150	117,475	30,162	23,812	30,162	2,80
66225/66462	57,150	117,475	31,750	23,812	33,338	0,30
623/612	57,150	120,650	41,275	31,750	41,275	14,00
72225C/72487	57,150	123,825	32,791	25,400	36,512	2,00
555S/552A	57,150	123,825	36,678	30,162	38,100	9,40
65225/65500	57,150	127,000	44,450	34,925	44,450	9,40
78225/78551	57,150	140,030	33,236	23,520	36,512	7,90
78225C/78551	57,150	140,030	33,236	23,520	36,512	8,40
388A/382A	57,531	96,838	21,946	15,875	21,000	3,00
66589/66520	59,972	122,238	31,750	23,812	33,338	2,00
39236/39412	59,987	104,775	22,000	15,875	21,433	1,60
HM813839/10	59,987	127,000	36,512	26,988	36,512	3,80
HM911244/11	59,987	130,000	30,924	22,650	34,100	7,90
H913840/10	59,987	146,050	39,688	25,400	41,275	4,30
JLM508748/10	60,000	95,000	24,000	19,000	24,000	2,80
JP6049/10	60,000	100,000	20,000	15,500	21,000	1,30
29580/29520	60,000	107,950	25,400	19,050	25,400	0,80
29582/29520	60,000	107,950	25,400	19,050	25,400	0,80
397/394A	60,000	110,000	21,996	18,824	22,000	0,80
3977/3920	60,000	112,712	30,048	23,812	30,162	4,60
JF6049/10	60,000	115,000	39,000	33,000	40,000	11,90
476/472	60,000	120,000	29,007	24,237	29,794	4,10
JW6049/10	60,000	125,000	33,500	26,000	37,000	4,80
28985/28919	60,325	99,979	25,400	19,050	24,605	2,50
28985/28921	60,325	100,000	25,400	19,845	25,400	2,50
28985/28920	60,325	101,600	25,400	19,845	25,400	2,50
3980/3920	60,325	112,712	30,048	23,812	30,162	4,60
HM212044/11	60,325	122,238	38,354	29,718	38,100	10,90
5583/5535	60,325	122,238	43,764	36,512	43,658	12,20
558/552A	60,325	123,825	36,678	30,162	38,100	9,40
HM813841/10	60,325	127,000	36,512	26,988	36,512	3,80
HM813841A/10	60,325	127,000	36,512	26,988	36,512	3,80
65237/65500	60,325	127,000	44,450	34,925	44,450	9,40
65237A/65500	60,325	127,000	44,450	34,925	44,450	9,40
HM911245/10	60,325	130,175	33,338	23,812	36,512	5,30
HM911245/16	60,325	134,983	33,338	21,948	35,862	5,30
H715332/11	60,325	136,525	46,038	36,512	46,038	8,60
HH814542/10	60,325	152,400	52,705	41,275	52,705	10,90
28990/28920	61,912	101,600	24,608	19,845	24,608	1,80
392/394A	61,912	110,000	21,996	18,824	22,000	0,80
HM911249/10	61,912	130,175	33,338	23,812	36,512	5,30
H715334/11	61,912	136,525	46,038	36,512	46,038	8,60
H913842/10	61,912	146,050	39,688	25,400	41,275	4,30
H913843/10	61,912	146,050	39,688	25,400	41,275	4,30
28995/28920	62,738	101,600	25,400	19,845	25,400	2,50
L910349/10	63,487	94,976	15,500	12,000	17,000	11,70
LL510749/10	63,500	92,075	12,700	9,525	13,495	3,00

- warehouse - order - phone

https://nppnovoteh.com

Weight [kg]	Basic load ratings [kN]		Limiting speed [rpm]		Basic makes*		Bearing No.
	dyn. C	stat. C_0	grease	oil	-	others	
1,08	142	189	3500	4700			**45290/45220**
1,05	142	189	3500	4700			**45291/45220**
1,06	142	189	3200	4300			**45291/45221**
1,09	126	166	2900	3800			**469/453A**
0,93	91,6	126	3200	4300			**390/394A**
1,21	126	166	3500	4700			**469/454**
1,36	129	191	3200	4300			**3979/3920**
1,37	155	224	3200	4300			**39580/39520**
1,33	155	224	3200	4300			**39581/39520**
1,53	128	197	3600	4800			**33225/33462**
1,51	138	166	3300	4400			**66225/66462**
2,09	192	244	3300	4400			**623/612**
2,05	167	208	2900	3900			**72225C/72487**
2,14	177	248	3000	4100			**555S/552A**
2,68	225	297	3000	4000			**65225/65500**
2,56	158	193	2600	3400			**78225/78551**
2,67	185	234	2600	3400			**78225C/78551**
0,57	84,2	108	3800	5000			**388A/382A**
1,65	143	178	3100	4200			**66589/66520**
0,67	89,6	120	3700	5000			**39236/39412**
2,61	179	256	2800	3800			**HM813839/10**
2,02	154	183	2700	3600			**HM911244/11**
3,17	213	256	2400	3200			**H913840/10**
0,63	90,4	135	3700	5000			**JLM508748/10**
0,61	80,9	101	3700	5000			**JP6049/10**
0,84	102	158	3200	4300			**29580/29520**
0,98	102	158	3200	4300			**29582/29520**
0,89	91,6	126	3200	4300			**397/394A**
1,3	129	191	3200	4300			**3977/3920**
1,86	214	279	3100	4100			**JF6049/10**
1,53	133	186	3200	4200			**476/472**
2,04	158	209	2200	3200			**JW6049/10**
0,74	98,2	149	3500	4700			**28985/28919**
0,75	98,2	149	3600	4800			**28985/28921**
0,79	98,2	149	3600	4800			**28985/28920**
1,29	129	191	3200	4300			**3980/3920**
1,99	209	279	3100	4100			**HM212044/11**
2,4	219	327	3100	4100			**5583/5535**
2,06	177	248	3000	4100			**558/552A**
2,61	179	256	2900	3800			**HM813841/10**
2,61	179	256	2900	3800			**HM813841A/10**
2,66	225	297	3000	4000			**65237/65500**
2,59	225	297	3000	4000			**65237A/65500**
2,06	154	183	2600	3600			**HM911245/10**
2,18	154	183	2700	3600			**HM911245/16**
3,55	249	405	2800	3800			**H715332/11**
5,01	328	451	1700	2500			**HH814542/10**
0,75	98,2	149	3500	4700			**28990/28920**
0,86	91,6	126	3200	4300			**392/394A**
2,03	154	183	2900	3800			**HM911249/10**
3,49	249	405	2400	3400			**H715334/11**
3,11	213	256	2200	3200			**H913842/10**
3,12	213	256	2200	3200			**H913843/10**
0,74	98,2	149	3500	4700			**28995/28920**
0,38	40,6	62,3	4900	6500			**L910349/10**
0,26	35,8	53,3	5700	7600			**LL510749/10**

* Other products also available



4. TAPERED ROLLER BEARINGS

4.2. Tapered roller bearings – inch dimensions



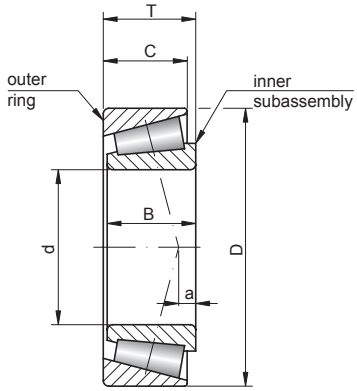

Bearing No.	Dimensions [mm]					
	d	D	B	C	T	a
L610549/10	63,500	94,458	19,050	15,083	19,050	0,50
39250/39412	63,500	104,775	22,000	15,875	21,433	1,50
29585/29520	63,500	107,950	25,400	19,050	25,400	0,80
29585/29522	63,500	107,950	25,400	19,050	25,400	0,80
29586/29520	63,500	107,950	25,400	19,050	25,400	0,80
390A/394A	63,500	110,000	21,996	18,824	22,000	0,80
390A/394AS	63,500	110,000	21,996	18,824	22,000	0,80
395/394A	63,500	110,000	21,996	18,824	22,000	0,80
29585/29521	63,500	110,000	25,400	19,050	25,400	0,80
3982/3920	63,500	112,712	30,048	23,812	30,162	4,60
39585/39520	63,500	112,712	30,162	23,812	30,162	6,60
39585A/39520	63,500	112,712	30,162	23,812	30,162	6,60
477/472	63,500	120,000	29,007	24,237	29,794	4,10
483/472	63,500	120,000	29,007	24,237	29,794	4,10
HM212046/11	63,500	122,238	38,354	29,718	38,100	10,90
HM212047/11	63,500	122,238	38,354	29,718	38,100	10,90
5584/5535	63,500	122,238	43,764	36,512	43,658	12,20
559/552A	63,500	123,825	36,678	30,162	38,100	9,40
565/563	63,500	127,000	36,170	28,575	36,512	8,10
HM813842/10	63,500	127,000	36,512	26,988	36,512	3,80
HM813842A/10	63,500	127,000	36,512	26,988	36,512	3,80
6382/6320	63,500	135,755	56,007	44,450	53,975	19,30
78250/78537	63,500	136,525	33,236	23,520	36,512	7,90
639/632	63,500	136,525	41,275	31,750	41,275	11,20
H414235/10	63,500	136,525	41,275	31,750	41,275	10,90
78250/78551	63,500	140,030	33,236	23,520	36,512	7,90
HH914447/12	63,500	177,800	53,975	37,308	57,150	0,30
39586/39520	64,988	112,712	30,924	23,812	30,162	6,60
78255X/78551	64,988	140,030	32,923	23,520	36,512	7,90
78255X/78571	64,988	144,983	32,923	23,007	36,000	7,90
JLM710949/10	65,000	105,000	23,000	18,500	24,000	0,30
JLM710949C/10	65,000	105,000	23,000	18,500	24,000	0,30
JM511946/10	65,000	110,000	28,000	22,500	28,000	3,30
JD6549/10	65,000	110,000	31,000	25,000	31,000	7,60
JH211749/10	65,000	120,000	38,500	32,000	39,000	10,70
JH211749A/10	65,000	120,000	38,500	32,000	39,000	10,70
JW6549/10	65,000	130,000	33,500	26,000	37,000	7,90
J6392/27	65,000	140,000	56,007	44,450	53,975	19,30
6379/6320	65,088	135,755	56,007	44,450	53,975	19,30
H715340/11	65,088	136,525	46,038	36,512	46,038	8,60
5595/5535	65,883	122,238	43,764	36,512	43,658	12,20
H212749/10	65,987	123,975	41,500	34,000	41,500	12,20
L812147/11	66,675	103,213	17,247	11,989	17,247	4,00
L812148/11	66,675	103,213	17,602	11,989	17,602	3,60
29590/29520	66,675	107,950	25,400	19,050	25,400	0,80
395A/394A	66,675	110,000	21,996	18,824	22,000	0,80
395S/394A	66,675	110,000	21,996	18,824	22,000	0,80
3984/3920	66,675	112,712	30,048	23,812	30,162	4,60
3984/3925	66,675	112,712	30,048	23,812	30,162	4,60
3984/3926	66,675	112,712	30,048	26,988	33,338	4,60
3994/3920	66,675	112,712	30,048	23,812	30,162	4,60
39590/39520	66,675	112,712	30,162	23,812	30,162	6,60
39590/39521	66,675	112,712	30,162	23,812	30,162	6,60
39591/39520	66,675	112,712	30,162	23,812	30,162	6,60
HM212049/10	66,675	122,238	38,354	29,718	38,100	10,90
HM212049/11	66,675	122,238	38,354	29,718	38,100	10,90

https://nppnovoteh.com



Weight [kg]	Basic load ratings [kN]		Limiting speed [rpm]		Basic makes*		Bearing No.
	dyn. C	stat. C_0	grease	oil	-	others	
0,45	62	108	3600	4800			**L610549/10**
0,67	89,6	120	3400	4500			**39250/39412**
0,91	102	158	3200	4300			**29585/29520**
0,93	102	158	3200	4300			**29585/29522**
0,92	102	158	3200	4300			**29586/29520**
0,83	91,6	126	3200	4300			**390A/394A**
0,82	91,6	126	3200	4300			**390A/394AS**
0,82	91,6	126	3200	4300			**395/394A**
0,98	102	158	3200	5000			**29585/29521**
1,22	129	191	3200	4300			**3982/3920**
1,22	155	224	3200	4300			**39585/39520**
1,23	155	224	3200	4300			**39585A/39520**
1,46	133	186	3000	4000			**477/472**
1,45	133	186	3000	4000			**483/472**
1,94	209	279	3100	4100			**HM212046/11**
1,91	209	279	3100	4100			**HM212047/11**
2,29	219	327	3100	4100			**5584/5535**
1,97	177	248	3000	4100			**559/552A**
2,08	182	263	2900	3800			**565/563**
2,52	179	256	2900	3800			**HM813842/10**
2,53	179	256	2900	3800			**HM813842A/10**
3,68	298	404	2200	3200			**6382/6320**
2,26	158	193	3300	4400			**78250/78537**
2,81	216	298	2800	3800			**639/632**
2,91	252	335	1300	1800			**H414235/10**
2,41	158	193	2600	3400			**78250/78551**
6,87	352	413	1200	1600			**HH914447/12**
1,2	155	224	3600	4800			**39586/39520**
2,4	158	193	3100	4100			**78255X/78551**
2,57	158	193	2600	3400			**78255X/78571**
0,72	100	139	3300	4500			**JLM710949/10**
0,81	100	139	3300	4500			**JLM710949C/10**
1,05	131	195	3200	4300			**JM511946/10**
1,18	151	212	3000	4000			**JD6549/10**
1,86	207	283	3100	4100			**JH211749/10**
1,83	207	283	3100	4100			**JH211749A/10**
2,14	162	220	3000	4100			**JW6549/10**
3,94	298	404	2400	3200			**J6392/27**
3,61	298	404	2900	3800			**6379/6320**
3,38	249	405	1900	2800			**H715340/11**
2,21	219	327	2100	2800			**5595/5535**
2,15	231	319	3000	4000			**H212749/10**
0,5	64,8	89,1	4300	5600			**L812147/11**
0,49	64,8	89,1	5400	7200			**L812148/11**
0,84	102	158	3200	4300			**29590/29520**
1,06	91,6	126	3200	4300			**395A/394A**
0,78	91,6	126	3200	4300			**395S/394A**
0,78	129	191	3200	4300			**3984/3920**
1,14	129	191	3200	4300			**3984/3925**
1,13	129	191	3200	4300			**3984/3926**
1,15	129	191	3200	4300			**3994/3920**
1,13	155	224	3200	4300			**39590/39520**
1,15	155	224	3200	4200			**39590/39521**
1,17	155	224	3500	4700			**39591/39520**
1,85	209	279	3100	4100			**HM212049/10**
1,84	209	279	3100	4100			**HM212049/11**

* Other products also available

https://nppnovoteh.com

4. TAPERED ROLLER BEARINGS

4.2. Tapered roller bearings – inch dimensions



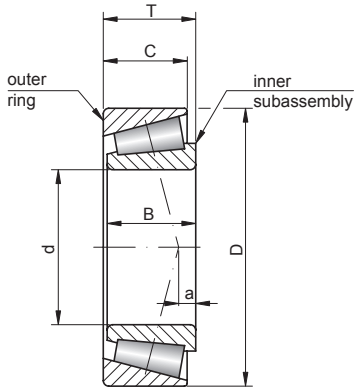

Bearing No.	Dimensions [mm]					
	d	D	B	C	T	a
HM212049X/11	66,675	122,238	38,354	29,718	38,100	10,90
560/552A	66,675	123,825	36,678	30,162	38,100	9,40
HM813844/10	66,675	127,000	36,512	26,988	36,512	3,80
HM813844/11	66,675	127,000	36,512	26,988	36,512	3,80
641/633	66,675	130,175	41,275	31,750	41,275	11,20
6386/6320	66,675	135,755	56,007	44,450	53,975	19,30
6389/6320	66,675	135,755	56,007	44,450	53,975	19,30
641/632	66,675	136,525	41,275	31,750	41,275	11,20
H414242/10	66,675	136,525	41,275	31,750	41,275	10,90
H715341/11	66,675	136,525	46,038	36,512	46,038	8,60
H715341A/11	66,675	136,525	46,038	36,512	46,038	8,60
HH914449/12	66,675	177,800	53,975	37,308	57,150	0,30
399A/394A	68,262	110,000	21,996	18,824	22,000	0,80
399AS/394A	68,262	110,000	21,996	18,824	22,000	0,80
33269/33462	68,262	117,475	30,162	23,812	30,162	2,80
480/472	68,262	120,000	29,007	24,237	29,794	4,10
560S/552A	68,262	123,825	36,678	30,162	38,100	9,40
570/563	68,262	127,000	36,170	28,575	36,512	8,10
H414245/10	68,262	136,525	41,275	31,750	41,275	10,90
H414245X/10	68,262	136,525	41,275	31,750	41,275	10,90
H715343/11	68,262	136,525	46,038	36,512	46,038	8,60
H715343/10	68,262	139,700	46,038	36,512	46,038	8,60
9185/9121	68,262	152,400	46,038	31,750	47,625	3,80
9278/9220	68,262	161,925	46,038	31,750	49,212	0,00
LL713149/10	69,850	99,217	16,000	13,000	17,000	4,60
L713049/10	69,850	101,600	19,050	15,083	19,050	2,70
LM613449/10	69,850	112,712	21,996	15,875	22,225	0,00
29675/29620	69,850	112,712	25,400	19,050	25,400	1,00
33275/33462	69,850	117,475	30,162	23,812	30,162	2,80
482/472	69,850	120,000	29,007	24,237	29,794	4,10
482/472A	69,850	120,000	29,007	23,444	29,002	4,10
47487/47420	69,850	120,000	32,545	26,195	32,545	6,40
47487/47420A	69,850	120,000	32,545	26,195	32,545	6,40
29675/29630	69,850	120,650	25,400	19,050	25,400	1,00
566/563	69,850	127,000	36,170	28,575	36,512	8,10
643/632	69,850	136,525	41,275	31,750	41,275	11,20
HM914545/10	69,850	146,050	33,338	23,812	36,512	12,70
H913849/10	69,850	146,050	39,688	25,400	41,275	4,30
655/653	69,850	146,050	41,275	31,750	41,275	7,90
745A/742	69,850	150,089	46,672	36,512	44,450	11,90
835/832	69,850	168,275	56,363	41,275	53,975	18,50
34274/34478	69,952	121,442	23,012	17,462	24,608	1,50
34274/34492A	69,952	125,052	23,012	16,400	23,731	1,50
H715347/11	69,987	136,525	46,038	36,512	46,038	8,60
H916642/10	69,987	176,212	53,183	36,512	54,770	2,00
JP7049/10	70,000	110,000	20,000	15,500	21,000	2,50
JLM813049/10	70,000	110,000	25,000	20,500	26,000	0,30
JM612949/10	70,000	115,000	29,000	23,000	29,000	2,50
484/472	70,000	120,000	29,007	24,237	29,794	4,10
JF7049/10	70,000	130,000	42,000	35,000	43,000	12,40
JF7049A/10	70,000	130,000	42,000	35,000	43,000	12,40
JW7049/10	70,000	140,000	35,500	27,000	39,000	8,60
JH913848/11	70,000	150,000	39,688	25,400	41,275	4,30
29680/29620	70,637	112,712	25,400	19,050	25,400	0,90
33281/33462	71,438	117,475	30,162	23,812	30,162	2,80
47490/47420	71,438	120,000	32,545	26,195	32,545	6,40

https://nppnovoteh.com

Weight [kg]	Basic load ratings [kN]		Limiting speed [rpm]		Basic makes*		Bearing No.
	dyn. C	stat. C_0	grease	oil	-	others	
1,81	209	279	3100	4100			**HM212049X/11**
1,87	177	248	3000	4000			**560/552A**
2,02	179	256	2900	3800			**HM813844/10**
1,99	179	256	3100	4100			**HM813844/11**
2,38	216	298	2800	3800			**641/633**
3,54	298	404	2800	3800			**6386/6320**
3,52	298	404	2900	3800			**6389/6320**
2,71	216	298	2800	3800			**641/632**
2,81	252	335	2700	3700			**H414242/10**
3,32	249	405	1800	2600			**H715341/11**
3,36	249	405	1700	2400			**H715341A/11**
6,73	352	413	1200	1600			**HH914449/12**
0,74	91,6	126	3200	4300			**399A/394A**
0,72	91,6	126	3200	4300			**399AS/394A**
1,29	128	197	3200	4300			**33269/33462**
1,34	133	186	300	4000			**480/472**
1,83	177	248	3000	4000			**560S/552A**
1,94	182	263	3100	4100			**570/563**
2,75	252	335	2700	3700			**H414245/10**
2,69	252	335	2700	3700			**H414245X/10**
3,26	249	405	2400	3400			**H715343/11**
3,46	249	405	2400	3400			**H715343/10**
3,83	264	306	2100	2800			**9185/9121**
4,64	275	330	1900	2800			**9278/9220**
0,38	45,2	75	5600	7500			**LL713149/10**
0,51	61,9	111	4300	5600			**L713049/10**
0,77	93,4	131	4400	5900			**LM613449/10**
0,95	102	166	3000	4000			**29675/29620**
1,25	128	197	3000	4000			**33275/33462**
1,3	133	186	3000	4000			**482/472**
1,27	133	186	3000	4000			**482/472A**
1,46	166	249	3000	4000			**47487/47420**
1,47	166	249	3000	4000			**47487/47420A**
1,16	102	166	3100	4100			**29675/29630**
1,89	182	263	2800	3800			**566/563**
2,6	216	298	2800	3800			**643/632**
2,8	161	202	2100	2700			**HM914545/10**
2,85	213	256	2700	3700			**H913849/10**
3,24	229	335	2500	3300			**655/653**
3,88	294	417	2400	3200			**745A/742**
6,15	379	522	2200	3000			**835/832**
1,08	94,6	137	2900	3800			**34274/34478**
1,14	94,6	137	2900	3800			**34274/34492A**
3,17	249	405	2400	3200			**H715347/11**
6,47	339	431	2200	3000			**H916642/10**
0,69	84,8	112	4000	5300			**JP7049/10**
0,88	106	168	3200	4200			**JLM813049/10**
1,13	139	198	3100	4100			**JM612949/10**
1,3	133	186	3000	4000			**484/472**
1,76	254	360	2600	3500			**JF7049/10**
1,76	254	360	2600	3500			**JF7049A/10**
2,65	189	257	2600	3600			**JW7049/10**
3,04	213	256	2400	3200			**JH913848/11**
0,93	102	166	3200	4300			**29680/29620**
1,18	128	197	3000	4000			**33281/33462**
1,41	166	249	3000	4000			**47490/47420**

* Other products also available

https://nppnovoteh.com

4. TAPERED ROLLER BEARINGS

4.2. Tapered roller bearings – inch dimensions



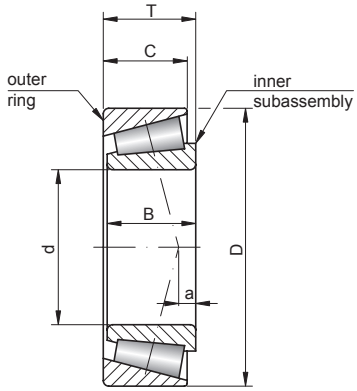

Bearing No.	Dimensions [mm]					
	d	D	B	C	T	a
567A/563	71,438	127,000	36,170	28,575	36,512	8,10
HM813849/10	71,438	127,000	36,512	26,988	36,512	3,80
495S/493	71,438	136,525	29,769	22,225	30,162	0,80
644/632	71,438	136,525	41,275	31,750	41,275	11,20
H414249/10	71,438	136,525	41,275	31,750	41,275	10,90
H715345/11	71,438	136,525	46,038	36,512	46,038	8,60
H715345/10	71,438	139,700	46,038	36,512	46,038	8,60
29685/29620	73,025	112,712	25,400	19,050	25,400	0,90
33287/33462	73,025	117,475	30,162	23,812	30,162	2,80
33287/33472	73,025	120,000	30,162	23,444	29,794	2,80
567/563	73,025	127,000	36,170	28,575	36,512	8,10
567X/563	73,025	127,000	36,170	28,575	36,512	8,10
576/572	73,025	139,992	36,098	28,575	36,512	5,30
657/653	73,025	146,050	41,275	31,750	41,275	7,90
6460/6420	73,025	149,225	54,229	44,450	53,975	15,00
744/742	73,025	150,089	46,672	36,512	44,450	11,90
762/752	73,025	161,925	48,260	38,100	47,625	11,90
29688/29620	73,817	112,712	25,400	19,050	25,400	0,90
568/563	73,817	127,000	36,170	28,575	36,512	8,10
577/572	74,612	139,992	36,098	28,575	36,512	5,30
JLM714149/10	75,000	115,000	25,000	19,000	25,000	0,50
JM714249/10	75,000	120,000	29,500	25,000	31,000	2,00
JM714249A/10	75,000	120,000	29,500	25,000	31,000	2,00
JH415647/10	75,000	145,000	51,000	42,000	51,000	14,40
JW7549/10	75,000	150,000	38,000	29,000	42,000	9,40
HM215249/10	75,987	132,000	39,000	32,000	39,000	9,60
LL714649/10	76,200	105,570	13,495	9,525	13,495	6,60
L814749/10	76,200	109,538	19,050	15,083	19,050	5,10
34300/34478	76,200	121,442	23,012	17,462	24,608	1,50
34301/34478	76,200	121,442	23,012	17,462	24,608	1,50
42687/42620	76,200	127,000	31,000	22,225	30,162	2,80
42688/42620	76,200	127,000	31,000	22,225	30,162	2,80
495A/492A	76,200	133,350	29,769	22,225	30,162	0,80
47678/47620	76,200	133,350	33,338	26,195	33,338	4,30
47679/47620	76,200	133,350	33,338	26,195	33,338	4,30
47680/47620	76,200	133,350	33,338	26,195	33,338	4,30
HM516442/10	76,200	133,350	39,688	32,545	39,688	7,40
495A/493A	76,200	135,000	29,769	22,225	30,162	0,80
5760/5735	76,200	135,733	46,100	34,925	44,450	11,70
495AX/493	76,200	136,525	29,769	22,225	30,162	0,80
575/572X	76,200	139,700	36,098	28,575	36,512	5,30
575/572	76,200	139,992	36,098	28,575	36,512	5,30
575S/572	76,200	139,992	36,098	28,575	36,512	5,30
659/653	76,200	146,050	41,275	31,750	41,275	7,90
6461/6420	76,200	149,225	54,229	44,450	53,975	15,00
6461A/6420	76,200	149,225	54,229	44,450	53,975	15,00
748S/742	76,200	150,089	46,672	36,512	44,450	11,90
590A/592A	76,200	152,400	36,322	30,162	39,688	2,50
9285/9220	76,200	161,925	46,038	31,750	49,212	0,00
755/752	76,200	161,925	48,260	38,100	47,625	5,30
6575/6535	76,200	161,925	55,100	42,862	53,975	13,20
843/832	76,200	168,275	56,363	41,275	53,975	18,50
6576C/6520	76,200	169,850	55,100	44,450	53,975	13,20
9380/9321	76,200	171,450	46,038	31,750	49,212	4,30
9378/9321	76,200	171,450	50,800	31,750	52,388	1,30
H917840/10	76,200	180,975	53,183	35,720	53,975	0,50



Weight [kg]	Basic load ratings [kN]		Limiting speed [rpm]		Basic makes*		Bearing No.
	dyn. C	stat. C_0	grease	oil	-	others	
1,84	182	263	2900	3800			**567A/563**
2,28	179	256	3200	4200			**HM813849/10**
1,92	143	216	2300	3100			**495S/493**
2,54	216	298	2800	3800			**644/632**
2,64	252	335	2600	3600			**H414249/10**
3,13	249	405	2400	3400			**H715345/11**
3,27	249	405	2400	3400			**H715345/10**
0,88	102	166	3000	4000			**29685/29620**
1,17	128	197	3000	4000			**33287/33462**
1,26	128	197	3000	4000			**33287/33472**
1,79	182	263	2800	3800			**567/563**
1,81	182	263	2800	3800			**567X/563**
2,47	191	292	2600	3400			**576/572**
3,12	229	335	2200	3200			**657/653**
4,39	321	463	2500	3400			**6460/6420**
3,75	294	417	2400	3200			**744/742**
4,79	303	441	2000	2700			**762/752**
0,86	102	166	3100	4100			**29688/29620**
1,78	182	263	2900	3800			**568/563**
2,42	191	292	2600	3400			**577/572**
0,85	110	167	3000	4000			**JLM714149/10**
1,3	148	229	2900	3900			**JM714249/10**
1,27	148	229	2900	3900			**JM714249A/10**
3,79	321	463	2500	3400			**JH415647/10**
3,22	214	294	2200	3200			**JW7549/10**
2,11	222	324	2400	3400			**HM215249/10**
0,32	37,9	61	5000	6600			**LL714649/10**
0,59	64,1	120	4400	5800			**L814749/10**
0,95	94,6	137	2900	3800			**34300/34478**
0,94	94,6	137	2900	3800			**34301/34478**
1,45	149	222	2800	3800			**42687/42620**
1,39	149	222	2800	3800			**42688/42620**
1,68	143	216	2400	3400			**495A/492A**
1,87	167	262	2400	3400			**47678/47620**
1,9	167	262	2600	3500			**47679/47620**
1,91	167	262	2600	3500			**47680/47620**
2,36	202	353	1900	2800			**HM516442/10**
1,79	143	216	2400	3400			**495A/493A**
2,7	237	380	2700	3500			**5760/5735**
1,76	143	216	2400	3400			**495AX/493**
2,39	191	292	2400	3400			**575/572X**
2,37	191	292	2400	3400			**575/572**
2,33	191	292	2400	3400			**575S/572**
3,02	229	335	2200	3200			**659/653**
4,23	321	463	2500	3400			**6461/6420**
4,15	321	463	2500	3400			**6461A/6420**
3,62	294	417	2200	3200			**748S/742**
3,2	200	319	2400	3200			**590A/592A**
4,24	275	330	1900	2800			**9285/9220**
4,68	303	441	2000	3000			**755/752**
5,35	343	523	2500	3300			**6575/6535**
5,82	379	522	1700	2200			**843/832**
6,11	343	523	1600	2100			**6576C/6520**
5,1	284	351	1800	2500			**9380/9321**
5,34	284	351	2500	3300			**9378/9321**
6,54	350	458	1900	2600			**H917840/10**

* Other products also available

https://nppnovoteh.com

4. TAPERED ROLLER BEARINGS

4.2. Tapered roller bearings – inch dimensions



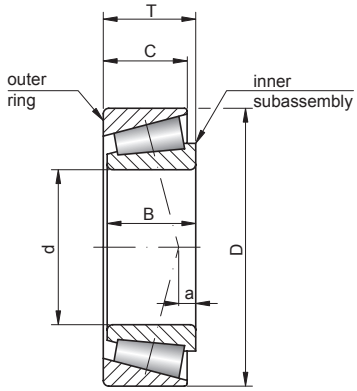

Bearing No.	Dimensions [mm]					
	d	D	B	C	T	a
HH221430/10	76,200	190,500	57,531	46,038	57,150	15,00
6576/6535	76,200	191,925	55,100	42,862	53,975	13,20
LM814849/10	77,788	117,475	25,400	19,050	25,400	2,30
34306/34478	77,788	121,442	23,012	17,462	24,608	1,50
34307/34478	77,788	121,442	23,012	17,462	24,608	1,50
42690/42620	77,788	127,000	31,000	22,225	30,162	2,80
495AS/493	77,788	136,525	29,769	22,225	30,162	0,80
H715348/11	77,788	136,525	46,038	36,512	46,038	8,60
H816249/10	77,788	164,976	46,248	36,251	49,500	6,40
661/653	79,375	146,050	41,275	31,750	41,275	7,90
756A/752	79,375	161,925	48,260	38,100	47,625	11,90
HH221431/10	79,375	190,500	57,531	46,038	57,150	15,00
HM218238/10	79,974	146,975	40,000	32,500	40,000	8,60
JP8049/10	80,000	125,000	22,500	17,500	24,000	2,30
JM515649/10	80,000	130,000	34,000	28,500	35,000	5,10
JW8049/10	80,000	160,000	41,000	31,000	45,000	9,70
98316/98788	80,000	200,000	49,212	34,925	52,761	1,30
47681/47620	80,962	133,350	33,338	26,195	33,338	4,30
496/493	80,962	136,525	29,769	22,225	30,162	0,80
581/572	80,962	139,992	36,098	28,575	36,512	5,30
740/742	80,962	150,089	46,672	36,512	44,450	11,90
L116149/10	82,550	115,888	21,433	16,670	20,638	1,30
27687/27620	82,550	125,412	25,400	19,845	25,400	0,50
495/492A	82,550	133,350	29,769	22,225	30,162	0,80
47686/47620	82,550	133,350	33,338	26,195	33,338	4,30
47686/47620A	82,550	133,350	33,338	26,195	33,338	4,30
47687/47620	82,550	133,350	33,338	26,195	33,338	4,30
HM516448/10	82,550	133,350	39,688	32,545	39,688	7,40
HM516449/10	82,550	133,350	39,688	32,545	39,688	7,40
495/493	82,550	136,525	29,769	22,225	30,162	0,80
580/572X	82,550	139,700	36,098	28,575	36,512	5,30
580/572	82,550	139,992	36,098	28,575	36,512	5,30
582/572	82,550	139,992	36,098	28,575	36,512	5,30
663/653	82,550	146,050	41,275	31,750	41,275	7,90
749A/742	82,550	150,089	46,672	36,512	44,450	11,90
750A/742	82,550	150,089	46,672	36,512	44,450	11,90
595/592A	82,550	152,400	36,322	30,162	39,688	2,50
663/652	82,550	152,400	41,275	31,750	41,275	7,90
757/752	82,550	161,925	48,260	38,100	47,625	11,90
6559C/6535	82,550	161,925	55,100	42,862	53,975	13,20
842/832	82,550	168,275	56,363	41,275	53,975	18,50
H917849/10	82,550	180,975	53,183	35,720	53,975	0,50
27689/27620	83,345	125,412	25,400	19,845	25,400	0,50
27690/27620	83,345	125,412	25,400	19,845	25,400	0,50
27691/27620	83,345	125,412	25,400	19,845	25,400	0,50
498/493	84,138	136,525	29,769	22,225	30,162	0,80
9385/9321	84,138	171,450	46,038	31,750	49,212	4,30
9386H/9320	84,138	177,800	46,038	34,925	52,388	4,40
27695/27620	84,976	125,412	25,400	19,845	25,400	0,50
JM716648/10	85,000	130,000	29,000	24,000	30,000	0,30
JM716649/10	85,000	130,000	29,000	24,000	30,000	0,30
JHM516849/10	85,000	140,000	38,000	31,500	39,000	5,80
JH217249/10	85,000	150,000	46,000	38,000	46,000	11,90
90334/90744	85,000	188,912	52,761	31,750	53,297	10,40
98335/98788	85,000	200,000	49,212	34,925	52,761	1,30
749/742	85,026	150,089	46,672	36,512	44,450	11,90

- warehouse - order - phone



Weight [kg]	Basic load ratings [kN]		Limiting speed [rpm]		Basic makes*		Bearing No.
	dyn. C	stat. C_0	grease	oil	-	others	
8,86	494	692	1900	2600			**HH221430/10**
5,38	343	523	2300	3000			**6576/6535**
0,89	109	183	2800	3800			**LM814849/10**
0,91	94,6	137	2900	3800			**34306/34478**
0,88	94,6	137	2900	3800			**34307/34478**
1,37	149	222	2800	3700			**42690/42620**
1,74	143	216	2400	3400			**495AS/493**
2,86	249	405	2600	3500			**H715348/11**
4,83	325	400	2000	2500			**H816249/10**
2,88	229	335	2500	3300			**661/653**
4,48	303	441	2300	3100			**756A/752**
8,69	494	692	1900	2600			**HH221431/10**
2,78	254	388	2000	3000			**HM218238/10**
0,95	105	141	2900	3800			**JP8049/10**
1,7	184	283	2700	3600			**JM515649/10**
3,99	244	339	2300	3100			**JW8049/10**
8,01	376	519	1500	2000			**98316/98788**
1,75	167	262	2600	3500			**47681/47620**
1,65	143	216	2400	3400			**496/493**
2,2	191	292	2600	3400			**581/572**
3,39	294	417	2400	3200			**740/742**
0,65	835	147	2600	3500			**L116149/10**
1,04	109	178	2600	3600			**27687/27620**
1,68	143	216	2400	3400			**495/492A**
1,69	167	262	2400	3400			**47686/47620**
1,71	167	262	2400	3400			**47686/47620A**
1,66	167	262	2600	3500			**47687/47620**
2,08	202	353	2600	3500			**HM516448/10**
2,12	202	353	2600	3500			**HM516449/10**
1,6	143	216	2400	3400			**495/493**
2,14	191	292	2400	3400			**580/572X**
2,14	191	292	2400	3400			**580/572**
2,1	191	292	2400	3400			**582/572**
2,75	229	335	2200	3200			**663/653**
3,33	294	417	2200	3200			**749A/742**
3,29	249	417	2400	3400			**750A/742**
2,98	200	319	2300	3100			**595/592A**
3,12	229	335	2200	3200			**663/652**
4,38	303	441	2300	3100			**757/752**
5,04	343	523	2300	3000			**6559C/6535**
5,48	379	522	2200	3000			**842/832**
6,21	350	458	2200	3000			**H917849/10**
1,03	109	178	2700	3600			**27689/27620**
1,02	109	178	2600	3600			**27690/27620**
0,99	109	178	2700	3600			**27691/27620**
1,55	143	216	2400	3400			**498/493**
4,74	284	351	2000	3000			**9385/9321**
5,4	284	351	2300	3000			**9386H/9320**
0,68	109	178	3700	5000			**27695/27620**
1,32	149	245	2600	3500			**JM716648/10**
1,35	149	245	2600	3500			**JM716649/10**
2,26	220	339	3300	4400			**JHM516849/10**
3,33	307	446	2200	3200			**JH217249/10**
6,65	299	392	1300	1700			**90334/90744**
7,76	376	519	1600	2100			**98335/98788**
3,21	294	417	2200	3200			**749/742**

* Other products also available

4. TAPERED ROLLER BEARINGS

4.2. Tapered roller bearings – inch dimensions



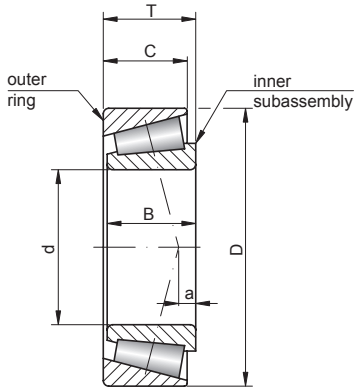

Bearing No.	Dimensions [mm]					
	d	D	B	C	T	a
749S/742	85,026	150,089	46,672	36,512	44,450	11,90
497/492A	85,725	133,350	29,769	22,225	30,162	0,80
497A/492A	85,725	133,350	29,769	22,225	30,162	0,80
497/493	85,725	136,525	29,769	22,225	30,162	0,80
497A/493	85,725	136,525	29,769	22,225	30,162	0,80
HM617049/10	85,725	142,138	42,862	34,133	42,862	7,40
665/653	85,725	146,050	41,275	31,750	41,275	7,90
665A/653	85,725	146,050	41,275	31,750	41,275	7,90
596/592A	85,725	152,400	36,322	30,162	39,688	2,50
758/752	85,725	161,925	48,260	38,100	47,625	11,90
677/672	85,725	168,275	41,275	30,162	41,275	2,80
841/832	85,725	168,275	56,363	41,275	53,975	18,50
42346/42584	87,960	148,430	28,971	21,433	28,575	3,00
LL217849/10	88,900	121,442	15,083	11,112	15,083	3,00
L217849/10	88,900	123,825	20,638	16,670	20,638	0,00
42350/42584	88,900	148,430	28,971	21,433	28,575	3,00
593/592A	88,900	152,400	36,322	30,162	39,688	2,50
593A/592A	88,900	152,400	36,322	30,162	39,688	2,50
759/752	88,900	161,925	48,260	38,100	47,625	11,90
766/752	88,900	161,925	48,260	38,100	47,625	11,90
6580/6535	88,900	161,925	55,100	42,862	53,975	13,20
679/672	88,900	168,275	41,275	30,162	41,275	2,80
850/832	88,900	168,275	56,363	41,275	53,975	18,50
855/854	88,900	190,500	57,531	44,450	57,150	15,20
HH221434/10	88,900	190,500	57,531	46,038	57,150	15,00
98350/98788	88,900	200,000	49,212	34,925	52,761	1,30
HM218248/10	89,974	146,975	40,000	32,500	40,000	8,60
JM718149/10	90,000	145,000	34,000	27,000	35,000	2,00
JM718149A/10	90,000	145,000	34,000	27,000	35,000	2,00
JHM318448/10	90,000	155,000	44,000	35,500	44,000	9,90
J90354/48	90,000	190,000	46,038	31,750	50,800	12,70
JHH221436/13	90,000	190,000	57,531	46,038	57,150	15,00
760/752	90,488	161,925	48,260	38,100	47,625	11,90
LM718947/10	91,973	142,875	30,000	22,000	30,000	1,80
47890/47820	92,075	146,050	34,925	26,195	33,338	1,00
598A/592A	92,075	152,400	36,322	30,162	39,688	2,50
598/592A	92,075	152,400	36,322	30,162	39,688	2,50
681/672	92,075	168,275	41,275	30,162	41,275	2,80
681A/672	92,075	168,275	41,275	30,162	41,275	2,80
77362/77675	92,075	171,450	48,260	38,100	47,625	9,70
778/772	92,075	180,975	48,006	38,100	47,625	8,10
857/854	92,075	190,500	57,531	44,450	57,150	15,20
42368/42584	93,662	148,430	28,971	21,433	28,575	3,00
42373/42584	94,975	148,430	28,971	21,433	28,575	3,00
JL819349/10	95,000	135,000	20,000	14,000	20,000	10,90
JP10044/10	95,000	145,000	22,500	17,500	24,000	6,10
JM719149/13	95,000	150,000	34,000	27,000	35,000	1,50
JF9549/10	95,000	160,000	46,000	38,000	46,000	10,70
LL319349/10	95,250	128,588	15,083	11,908	15,875	4,30
L319249/10	95,250	130,175	21,433	16,670	20,638	1,30
47896/47820	95,250	146,050	34,925	26,195	33,338	1,00
594A/592XE	95,250	147,638	36,322	26,192	35,717	2,50
594A/592XS	95,250	147,638	36,322	26,192	35,717	2,50
42375/42584	95,250	148,430	28,971	21,433	28,575	3,00
594/593X	95,250	150,000	36,322	27,000	35,992	2,50
594/592A	95,250	152,400	36,322	30,162	39,688	2,50

- warehouse - order - phone



Weight [kg]	Basic load ratings [kN]		Limiting speed [rpm]		Basic makes*		Bearing No.
	dyn. C	stat. C_0	grease	oil	-	others	
3,2	294	417	2200	3200			**749S/742**
1,39	143	216	2400	3400			**497/492A**
1,39	143	216	2400	3400			**497A/492A**
1,5	143	216	2400	3400			**497/493**
1,47	143	216	2400	3400			**497A/493**
2,71	242	399	2500	3200			**HM617049/10**
2,61	229	335	2200	3200			**665/653**
2,58	229	335	2200	3200			**665A/653**
2,86	200	319	2300	3100			**596/592A**
4,22	303	441	2300	3100			**758/752**
4,12	245	386	2000	3000			**677/672**
5,29	379	522	2500	3300			**841/832**
1,95	151	241	2300	3100			**42346/42584**
0,47	55,1	88,7	2700	3600			**LL217849/10**
0,74	858	156	2700	3500			**L217849/10**
1,92	151	241	2300	3100			**42350/42584**
2,73	200	319	2300	3100			**593/592A**
2,7	200	319	2300	3100			**593A/592A**
4,06	303	441	2000	3000			**759/752**
4,01	303	441	2300	3100			**766/752**
4,67	343	523	2000	3000			**6580/6535**
3,98	245	386	2300	3100			**679/672**
5,1	379	522	2200	3000			**850/832**
7,67	424	630	1600	2100			**855/854**
8,06	494	692	1500	2000			**HH221434/10**
7,55	376	519	1800	2600			**98350/98788**
2,36	254	388	2200	3200			**HM218248/10**
2,12	206	313	2400	3200			**JM718149/10**
2,09	206	313	2400	3200			**JM718149A/10**
3,3	306	447	1700	2400			**JHM318448/10**
6,12	299	392	1800	2400			**J90354/48**
7,94	494	692	1600	2000			**JHH221436/13**
3,97	303	441	2300	3100			**760/752**
1,62	152	240	3600	4800			**LM718947/10**
2,03	182	307	2200	3200			**47890/47820**
2,57	200	319	2000	3000			**598A/592A**
2,61	200	319	2000	3000			**598/592A**
3,83	245	386	2100	2800			**681/672**
3,8	245	386	2100	2800			**681A/672**
4,83	315	474	2000	2500			**77362/77675**
5,57	320	495	2200	3000			**778/772**
7,46	424	630	1800	2600			**857/854**
1,77	151	241	2200	3200			**42368/42584**
1,81	151	241	2800	3800			**42373/42584**
0,87	76,9	133	4000	5300			**JL819349/10**
1,27	116	172	2900	3900			**JP10044/10**
2,17	199	317	3000	4000			**JM719149/13**
3,76	328	506	2400	3200			**JF9549/10**
0,53	58,8	99,4	4800	6400			**LL319349/10**
0,79	88,3	166	2500	3300			**L319249/10**
1,91	182	307	2400	3100			**47896/47820**
2,07	200	319	2300	3100			**594A/592XE**
2,05	200	319	2300	3100			**594A/592XS**
1,71	151	241	2400	3400			**42375/42584**
2,21	200	319	2100	2800			**594/593X**
2,47	200	319	2000	3000			**594/592A**

* Other products also available

https://nppnovoteh.com

4. TAPERED ROLLER BEARINGS

4.2. Tapered roller bearings – inch dimensions



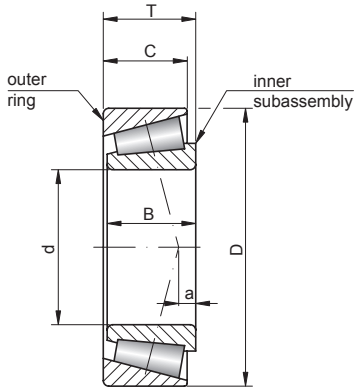

Bearing No.	Dimensions [mm]					
	d	D	B	C	T	a
594A/592A	95,250	152,400	36,322	30,162	39,688	2,50
52375/52618	95,250	157,162	36,116	26,195	36,512	0,30
683/672	95,250	168,275	41,275	30,162	41,275	2,80
683XA/672	95,250	168,275	41,275	30,162	41,275	2,80
77375/77675	95,250	171,450	48,260	38,100	47,625	9,70
864/854	95,250	190,500	57,531	44,450	57,150	15,20
HH221440/10	95,250	190,500	57,531	46,038	57,150	15,00
42381/42584	96,838	148,430	28,971	21,433	28,575	3,00
90381/90744	96,838	188,912	46,038	31,750	50,800	12,70
52387/52618	98,425	157,162	36,116	26,195	36,512	0,30
685/672	98,425	168,275	41,275	30,162	41,275	2,80
HH421246C/10	98,425	184,150	63,500	52,388	63,500	16,80
HH221442/10	98,425	190,500	57,531	46,038	57,150	15,00
HM321245/10	99,212	171,450	49,212	38,100	49,212	11,20
HM220149/10	99,974	156,975	42,000	34,000	42,000	8,80
HH224334/10	99,975	212,725	66,675	53,975	66,675	18,80
HH221447/10	99,982	190,500	57,531	46,038	57,150	15,00
JP10049/10	100,000	145,000	22,500	17,500	24,000	6,10
JP10049A/10	100,000	145,000	22,500	17,500	24,000	6,10
JLM820048/12	100,000	150,000	30,000	26,000	32,000	4,60
JM720249/10	100,000	155,000	35,000	28,000	36,000	0,30
JHM720249/10	100,000	160,000	40,000	32,000	41,000	2,50
JHH224333/15	100,000	215,000	66,675	53,975	66,675	18,80
52393/52618	100,012	157,162	36,116	26,195	36,512	0,30
LL420549/10	101,600	134,938	15,083	11,908	15,875	5,60
L420449/10	101,600	136,525	21,433	16,670	21,433	2,80
L521945/10	101,600	146,050	21,433	16,670	21,433	4,80
LM720648/10	101,600	146,050	25,400	19,050	25,400	4,90
52400/52618	101,600	157,162	36,116	26,195	36,512	0,30
52401/52618	101,600	157,162	36,116	26,195	36,512	0,30
52400/52638	101,600	161,925	36,116	29,370	39,688	0,30
52400/52637	101,600	161,925	36,116	26,195	36,512	0,30
687/672	101,600	168,275	41,275	30,162	41,275	2,80
LM921845/10	101,600	177,800	31,750	19,050	34,925	34,50
780/772	101,600	180,975	48,006	38,100	47,625	8,10
861/854	101,600	190,500	57,531	44,450	57,150	15,20
HH221449/10	101,600	190,500	57,531	46,038	57,150	15,00
HH221449A/10	101,600	190,500	57,531	46,038	57,150	15,00
98400/98788	101,600	200,000	49,212	34,925	52,761	1,30
941/932	101,600	212,725	66,675	53,975	66,675	19,80
HH224335/10	101,600	212,725	66,675	53,975	66,675	18,90
HH923649/10	101,600	250,825	73,025	50,800	76,200	3,30
HH923649/11	101,600	250,825	73,025	50,800	76,200	3,30
782/772	104,775	180,975	48,006	38,100	47,625	8,10
786/772	104,775	180,975	48,006	38,100	47,625	8,10
787/772	104,775	180,975	48,006	38,100	47,625	8,10
71412/71750	104,775	190,500	49,212	34,925	47,625	6,60
56418/56650	106,362	165,100	36,512	26,988	36,512	2,00
L521949/10	107,950	146,050	21,433	16,670	21,433	4,80
L521949/14	107,950	152,400	21,433	16,670	21,433	4,80
37425/37625	107,950	158,750	21,438	15,875	23,020	13,70
LM522546/10	107,950	159,987	34,925	26,988	34,925	1,50
48190/48120	107,950	161,925	34,925	26,988	34,925	3,80
56425/56650	107,950	165,100	36,512	26,988	36,512	2,00
56426/56650	107,950	165,100	36,512	26,988	36,512	2,00
56425/56662	107,950	168,275	36,512	26,988	36,512	2,00

- warehouse - order - phone



Weight [kg]	Basic load ratings [kN]		Limiting speed [rpm]		Basic makes*		Bearing No.
	dyn. C	stat. C_0	grease	oil	-	others	
2,46	200	319	2000	3000	◴	↻	**594A/592A**
2,66	207	343	2200	2900	◴	↻	**52375/52618**
3,68	245	386	1900	2800	◴	↻	**683/672**
3,66	245	386	1900	2800	◴	↻	**683XA/672**
4,65	315	474	1900	2800	◴	↻	**77375/77675**
7,25	424	603	1800	2600	◴	↻	**864/854**
7,64	494	692	1900	2600	◴	↻	**HH221440/10**
1,66	151	241	2200	3200	◴	↻	**42381/42584**
5,68	299	392	1800	2400	◴	↻	**90381/90744**
2,53	207	343	2200	2900	◴	↻	**52387/52618**
3,52	245	386	2100	2800	◴	↻	**685/672**
7,26	491	772	1800	2600	◴	↻	**HH421246C/10**
7,49	494	692	1800	2600	◴	↻	**HH221442/10**
4,56	320	486	1900	2600	◴	↻	**HM321245/10**
2,75	278	438	2000	3000	◴	↻	**HM220149/10**
11,7	630	906	1700	2300	◴	↻	**HH224334/10**
7,34	494	692	1800	2600	◴	↻	**HH221447/10**
0,91	116	172	4300	5600	◴	↻	**JP10049/10**
1,13	116	172	3100	4100	◴	↻	**JP10049A/10**
1,8	150	242	2400	3400	◴	↻	**JLM820048/12**
2,37	214	355	2200	2900	⏃	↻	**JM720249/10**
3	259	416	2200	2900	⏃	↻	**JHM720249/10**
12	630	906	1700	2300	◴	↻	**JHH224333/15**
2,46	207	343	2200	2900	◴	↻	**52393/52618**
0,56	601	104	5500	7300	⏃	↻	**LL420549/10**
0,84	905	175	3200	4300	◴	↻	**L420449/10**
1,16	889	186	3100	4100	◴	↻	**L521945/10**
1,29	122	202	3200	4300	◴	↻	**LM720648/10**
2,39	207	343	1900	2800	◴	↻	**52400/52618**
2,37	207	343	1900	2800	◴	↻	**52401/52618**
2,8	207	343	2200	2900	⏃	↻	**52400/52638**
2,64	207	343	2600	3600	◴	↻	**52400/52637**
3,36	245	386	1900	2800	◴	↻	**687/672**
3,4	174	246	2400	3200	◴	↻	**LM921845/10**
5,02	320	495	2000	2700	◴	↻	**780/772**
6,8	424	630	1800	2600	◴	↻	**861/854**
7,2	494	692	1800	2600	◴	↻	**HH221449/10**
7,26	494	692	1800	2600	◴	↻	**HH221449A/10**
6,82	376	519	1800	2600	◴	↻	**98400/98788**
10,9	530	786	1800	2300	◴	↻	**941/932**
11,5	630	906	1700	2300	◴	↻	**HH224335/10**
17,4	647	827	850	1200	◴	↻	**HH923649/10**
17,5	647	827	850	1200	◴	↻	**HH923649/11**
4,83	320	495	2000	2600	◴	↻	**782/772**
4,79	320	495	2000	2500	◴	↻	**786/772**
4,78	320	495	2000	2700	◴	↻	**787/772**
5,77	337	543	1700	2200	◴	↻	**71412/71750**
2,7	210	355	2300	3100	◴	↻	**56418/56650**
0,99	88,9	186	3600	4800	◴	↻	**L521949/10**
1,18	88,9	186	3000	4000	◴	↻	**L521949/14**
1,35	107	179	2100	2800	⏃	↻	**37425/37625**
2,36	181	357	2100	2800	◴	↻	**LM522546/10**
2,34	178	308	1900	2800	⏃	↻	**48190/48120**
2,62	210	355	1900	2800	⏃	↻	**56425/56650**
2,62	210	355	2100	2700	◴	↻	**56426/56650**
2,79	210	355	2100	2700	◴	↻	**56425/56662**

* Other products also available

https://nppnovoteh.com

4. TAPERED ROLLER BEARINGS

4.2. Tapered roller bearings – inch dimensions



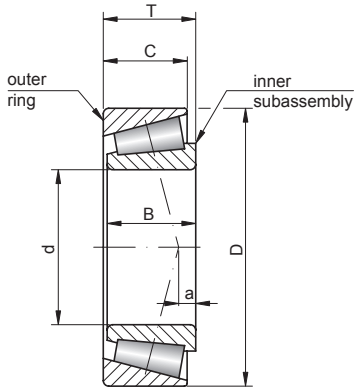

Bearing No.	Dimensions [mm]					
	d	D	B	C	T	a
67425/67675	107,950	171,450	30,162	25,268	34,000	4,60
71425/71750	107,950	190,500	49,212	34,925	47,625	6,60
936/932	107,950	212,725	66,675	53,975	66,675	19,80
HH224340/10	107,950	212,725	66,675	53,975	66,675	18,80
37431/37625	109,538	158,750	21,438	15,875	23,020	13,70
37431A/37625	109,538	158,750	21,438	15,875	23,020	13,70
64432/64700	109,974	177,800	41,275	30,162	41,275	1,30
LM522548/10	109,987	159,987	34,925	26,987	34,925	1,50
LM522549/10	109,987	159,987	34,925	26,987	34,925	1,50
64433/64700	109,992	177,800	41,275	30,162	41,275	1,30
JM822049/10	110,000	165,000	35,000	26,500	35,000	3,00
JHM522649/10	110,000	180,000	46,000	38,000	47,000	5,80
H924045/10	111,125	214,312	52,388	39,688	55,562	6,90
L623149/10	114,300	152,400	21,433	16,670	21,433	6,30
64450/64700	114,300	177,800	41,275	30,162	41,275	1,30
64450/64708	114,300	180,000	41,275	30,162	41,275	1,30
68450/68712	114,300	180,975	31,750	25,400	34,925	5,30
71450/71750	114,300	190,500	49,212	34,925	47,625	6,60
938/932	114,300	212,725	66,675	53,975	66,675	19,80
HH224346/10	114,300	212,725	66,675	53,975	66,675	18,80
HM926740/10	114,300	228,600	49,428	38,100	53,975	13,50
HH926744/10	114,300	273,050	82,550	53,975	82,550	13,50
HH926744/16	114,300	279,400	82,550	53,975	82,550	6,60
64452A/64700	114,975	177,800	41,275	30,162	41,275	1,30
HH224349/10	114,975	212,725	66,675	53,975	66,675	18,80
JLM722948/12	115,000	165,000	27,000	21,000	28,000	5,60
71453/71750	115,087	190,000	49,212	34,925	47,625	6,60
71455/71750	115,087	190,000	49,212	34,925	47,625	6,60
68462/68709	117,475	179,974	31,750	25,400	34,925	5,30
68462/68712	117,475	180,975	31,750	25,400	34,925	5,30
68463/68712	117,475	180,975	31,750	25,400	34,925	5,30
JP12049/10	120,000	170,000	25,000	19,500	27,000	7,90
JP12049A/10	120,000	170,000	25,000	19,500	27,000	7,90
JL724348/14	120,000	170,000	25,400	19,050	25,400	7,90
JM624649/10	120,000	180,000	36,000	26,000	36,000	0,00
L624549/10	120,650	160,338	21,433	16,670	21,433	8,40
L225842/10	120,650	169,862	26,195	20,638	25,400	2,50
M224749/11	120,650	172,242	36,512	27,783	35,720	3,60
M224749/10	120,650	174,625	36,512	27,783	35,720	3,60
HM624749/10	120,650	190,500	46,038	34,925	46,038	3,80
795/792	120,650	206,375	47,625	34,925	47,625	1,80
95475/95925	120,650	234,950	63,500	49,212	63,500	14,00
HH228340/10	120,650	254,000	82,550	61,912	77,788	23,40
HH926749/10	120,650	273,050	82,550	53,975	82,550	6,60
48286/48220	123,825	182,562	38,100	33,338	39,688	5,60
HM125948/10	123,825	204,775	60,325	45,237	55,562	14,20
JL725346/16	125,000	175,000	25,400	18,288	25,400	9,10
LL225749/10	127,000	165,895	17,462	13,495	18,258	6,10
L225849/10	127,000	169,862	26,195	20,638	25,400	2,50
L225849/18	127,000	180,975	26,195	20,638	25,400	2,50
48290/48220	127,000	182,562	38,100	33,338	39,688	5,60
67388/67322	127,000	196,850	46,038	38,100	46,038	6,40
74500/74850	127,000	215,900	47,625	34,925	47,625	2,30
HM926747/10	127,000	228,600	49,428	38,100	53,975	13,50
97500/97900	127,000	228,600	49,428	38,100	53,975	13,20
95500/95905	127,000	230,000	63,500	49,212	63,500	14,00

- warehouse - order - phone



Weight [kg]	Basic load ratings [kN]		Limiting speed [rpm]		Basic makes*		Bearing No.
	dyn. C	stat. C_0	grease	oil	-	others	
2,5	182	268	2000	3000	◴	↻	**67425/67675**
5,56	337	543	2200	3000	⬘	↻	**71425/71750**
10,4	530	786	1800	2300	◴	↻	**936/932**
11	630	906	1500	2000	◴	↻	**HH224340/10**
1,3	107	179	2100	2800	◴	↻	**37431/37625**
1,31	107	179	2100	2800	◴	↻	**37431A/37625**
3,7	254	419	1900	2600	◴	↻	**64432/64700**
2,2	181	357	2100	2800	◴	↻	**LM522548/10**
2,27	181	357	2100	2800	◴	↻	**LM522549/10**
3,7	254	419	1900	2600	◴	↻	**64433/64700**
2,45	210	357	2100	2700	◴	↻	**JM822049/10**
4,51	344	554	1900	2600	◴	↻	**JHM522649/10**
8,41	435	610	1500	2000	◴	↻	**H924045/10**
1,04	92,4	200	3700	4900	◴	↻	**L623149/10**
3,45	254	419	1800	2600	◴	↻	**64450/64700**
3,59	254	419	1900	2600	◴	↻	**64450/64708**
2,88	181	271	1800	2600	◴	↻	**68450/68712**
5,14	337	543	1700	2400	◴	↻	**71450/71750**
9,84	530	786	1700	2300	◴	↻	**938/932**
10,4	630	906	1700	2300	◴	↻	**HH224346/10**
9,67	458	673	1400	1900	◴	↻	**HM926740/10**
22,7	832	108	800	1000	◴	↻	**HH926744/10**
23,9	832	108	800	1000	◴	↻	**HH926744/16**
3,31	254	419	1800	2600	◴	↻	**64452A/64700**
10,3	630	906	1700	2300	◴	↻	**HH224349/10**
1,4	148	245	3600	4800	◴	↻	**JLM722948/12**
5,08	337	543	1800	2500	◴	↻	**71453/71750**
5,01	337	543	1800	2500	◴	↻	**71455/71750**
2,7	181	271	2300	3100	◴	↻	**68462/68709**
2,74	181	271	1800	2600	⬘	↻	**68462/68712**
2,66	181	271	2200	2900	◴	↻	**68463/68712**
1,73	153	238	3800	5000	◴	↻	**JP12049/10**
1,7	153	238	2700	3600	◴	↻	**JP12049A/10**
1,66	134	231	2000	2600	◴	↻	**JL724348/14**
3,08	229	377	2400	3200	◴	↻	**JM624649/10**
1,15	97,5	213	3200	4300	◴	↻	**L624549/10**
1,85	132	285	3100	4100	◴	↻	**L225842/10**
2,54	226	422	2800	3800	◴	↻	**M224749/11**
2,68	226	422	3000	4000	◴	↻	**M224749/10**
4,66	335	543	1700	2400	◴	↻	**HM624749/10**
6,34	350	593	2200	3000	◴	↻	**795/792**
12,3	582	931	1500	2000	◴	↻	**95475/95925**
19,4	843	124	800	600	◴	↻	**HH228340/10**
21,9	832	108	800	1000	◴	↻	**HH926749/10**
3,48	248	493	1800	2400	⬘	↻	**48286/48220**
7,16	437	691	1600	2100	◴	↻	**HM125948/10**
1,75	139	246	2600	3500	◴	↻	**JL725346/16**
0,92	83,5	153	3200	4300	◴	↻	**LL225749/10**
1,6	132	285	1800	2600	◴	↻	**L225849/10**
2,09	132	285	2400	3200	◴	↻	**L225849/18**
3,29	248	493	1700	2400	◴	↻	**48290/48220**
5,07	340	625	1600	2200	⬘	↻	**67388/67322**
6,98	354	614	1600	2100	◴	↻	**74500/74850**
8,74	458	673	1400	1900	⬘	↻	**HM926747/10**
8,48	348	486	1500	2000	◴	↻	**97500/97900**
11	582	931	1500	2000	◴	↻	**95500/95905**

* Other products also available

4. TAPERED ROLLER BEARINGS

4.2. Tapered roller bearings – inch dimensions



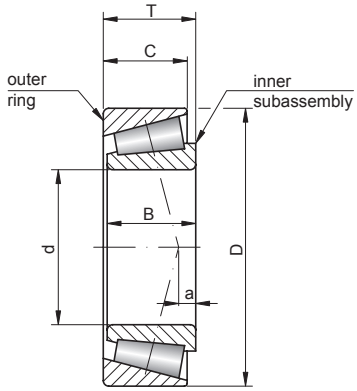

Bearing No.	Dimensions [mm]					
	d	D	B	C	T	a
95500/95925	127,000	234,950	63,500	48,212	63,500	14,00
HH228349/10	127,000	254,000	82,550	61,912	77,788	23,40
HH231637/15	127,000	295,275	87,312	57,150	82,550	26,70
HH932132/10	127,000	304,800	82,550	57,150	88,900	1,80
HM926749/10	127,792	228,600	49,428	53,975	53,975	13,50
48506/48750	128,588	190,500	31,750	25,400	34,925	16,50
799/792	128,588	206,375	47,625	34,925	47,625	1,80
HM227545/19	129,967	219,974	60,325	44,450	57,150	13,70
JP13049/10	130,000	185,000	27,000	21,000	29,000	8,90
JP13049A/10	130,000	185,000	27,000	21,000	29,000	8,90
797/792	130,000	206,375	47,625	34,925	47,625	1,90
JH429149/10	130,000	240,000	72,000	60,000	76,000	19,60
67389/67322	130,175	196,850	46,038	38,100	46,038	6,40
799A/792	130,175	206,375	47,625	34,925	47,625	1,80
LL327049/10	133,350	173,038	17,462	14,288	19,050	7,60
L327249/10	133,350	177,008	26,195	20,638	25,400	4,10
L826949/14	133,350	184,150	25,400	18,258	25,400	12,20
48385/48320	133,350	190,500	39,688	33,338	39,688	4,10
67390/67322	133,350	196,850	46,038	38,100	46,038	6,40
67391/67322	133,350	196,850	46,038	38,100	46,038	6,40
74525/74850	133,350	215,900	47,625	34,925	47,625	2,30
95525/95925	133,350	234,950	63,500	49,212	63,500	14,00
95528/95925	133,350	234,950	63,500	49,212	63,500	14,00
48393/48320	136,525	190,500	39,688	33,338	39,688	4,10
LM229139/10	136,525	194,975	33,000	27,500	33,000	1,00
74537/74850	136,525	215,900	47,625	34,925	47,625	2,20
896/892	136,525	228,600	57,150	44,450	57,150	6,10
LL428349/10	139,700	180,975	20,638	16,670	21,433	7,90
LM328448/10	139,700	187,325	29,370	23,020	28,575	3,60
74550/74845	139,700	214,975	47,625	34,925	47,625	2,20
74550/74850	139,700	215,900	47,625	34,925	47,625	2,20
74550A/74850	139,700	215,900	47,625	34,925	47,625	2,20
73551/73875	139,700	222,250	31,623	23,812	34,925	6,40
898/892	139,700	228,600	57,150	44,450	57,150	6,10
898A/892	139,700	228,600	57,150	44,450	57,150	6,10
99550/99100	139,700	254,000	66,675	47,625	66,675	12,20
HH231649/10	139,700	288,925	87,312	57,150	82,550	26,70
HH231649/15	139,700	295,275	87,312	57,150	82,550	26,70
HH234031/10	139,700	307,975	93,662	66,675	88,900	26,40
JP14049/10	140,000	195,000	27,000	21,000	29,000	11,90
LM229146/10	142,875	194,975	33,000	27,500	33,000	1,00
48685/48620	142,875	200,025	39,688	34,130	41,275	3,00
48684/48620	142,875	200,025	39,688	34,130	41,275	3,00
73562/73875	142,875	222,250	31,623	23,812	34,925	6,40
LL529749/10	146,050	188,120	20,638	16,670	22,225	9,40
36690/36620	146,050	193,675	28,575	23,020	28,575	4,80
36691/36620	146,050	193,675	28,575	23,020	28,575	4,80
82576/82931	146,050	236,538	56,642	44,450	57,150	3,60
HM231140/10	146,050	236,538	56,642	44,450	57,150	11,40
82576/82950	146,050	241,300	56,642	44,450	57,150	3,40
99575/99100	146,050	254,000	66,675	47,625	66,675	12,20
HH932145/10	146,050	304,800	82,550	57,150	88,900	1,80
HH932145/15	146,050	311,150	82,550	57,150	88,900	1,80
HM231148/10	149,225	236,538	56,642	44,450	57,150	11,40
HM231149/10	149,225	236,538	56,642	44,450	57,150	11,40
JL730646/12	150,000	205,000	28,575	21,438	28,575	11,40



Weight [kg]	Basic load ratings [kN]		Limiting speed [rpm]		Basic makes*		Bearing No.
	dyn. C	stat. C_0	grease	oil	-	others	
11,6	582	931	1500	2000	◴	↻	**95500/95925**
18,6	843	124	600	1000	◴	↻	**HH228349/10**
27,8	977	134	270	320	◴	↻	**HH231637/15**
30	904	125	250	340	◴	↻	**HH932132/10**
8,68	832	1080	1500	2000	◴	↻	**HM926749/10**
3,08	164	300	2400	3200	◴	↻	**48506/48750**
5,76	350	593	1700	2200	◴	↻	**799/792**
7,89	449	727	1600	2100	◴	↻	**HM227545/19**
2,2	181	283	2100	2800	◴	↻	**JP13049/10**
2,19	181	283	2900	3900	◴	↻	**JP13049A/10**
5,65	350	593	1700	2200	⛃	↻	**797/792**
14,6	636	1020	850	1200	◴	↻	**JH429149/10**
4,95	340	625	1700	2500	◴	↻	**67389/67322**
5,64	350	593	1700	2200	◴	↻	**799A/792**
1,01	89,3	170	5000	5500	◴	↻	**LL327049/10**
1,71	136	299	1800	2400	◴	↻	**L327249/10**
1,85	145	266	3100	4100	◴	↻	**L826949/14**
3,55	262	542	1700	2300	◴	↻	**48385/48320**
4,6	340	625	1600	2200	◴	↻	**67390/67322**
4,63	340	625	1700	2200	◴	↻	**67391/67322**
6,49	354	614	1600	2100	◴	↻	**74525/74850**
10,9	582	931	1500	2000	◴	↻	**95525/95925**
11	582	931	1500	2000	◴	↻	**95528/95925**
3,34	262	542	1700	2400	◴	↻	**48393/48320**
3,1	236	459	2400	3200	◴	↻	**LM229139/10**
6,24	354	614	2200	3000	◴	↻	**74537/74850**
8,97	482	809	1500	2000	◴	↻	**896/892**
1,3	105	211	2100	2800	◴	↻	**LL428349/10**
2,24	177	388	1600	2200	◴	↻	**LM328448/10**
5,9	354	614	1600	2100	◴	↻	**74550/74845**
5,99	354	614	1600	2100	◴	↻	**74550/74850**
5,94	354	614	1600	2100	◴	↻	**74550A/74850**
4,25	229	342	1900	2800	◴	↻	**73551/73875**
8,66	484	809	1500	2000	◴	↻	**898/892**
8,62	482	809	1500	2000	◴	↻	**898A/892**
13,9	611	103	1400	1800	◴	↻	**99550/99100**
24,2	977	1340	670	900	◴	↻	**HH231649/10**
26,1	977	1340	670	900	◴	↻	**HH231649/15**
31,2	1130	1580	253	370	◴	↻	**HH234031/10**
2,5	188	304	2000	3000	◴	↻	**JP14049/10**
2,74	236	459	1800	2600	◴	↻	**LM229146/10**
3,83	265	560	1600	2100	⛃	↻	**48685/48620**
3,74	265	560	1600	2100	◴	↻	**48684/48620**
4,08	229	342	2000	3000	◴	↻	**73562/73875**
1,39	105	214	2400	3400	◴	↻	**LL529749/10**
2,26	182	407	1600	2200	◴	↻	**36690/36620**
2,22	182	407	1600	2200	◴	↻	**36691/36620**
9,24	477	810	1500	2000	◴	↻	**82576/82931**
9,53	553	932	1500	2000	◴	↻	**HM231140/10**
9,86	477	810	1700	2300	◴	↻	**82576/82950**
13,2	611	1030	1400	1800	◴	↻	**99575/99100**
27,8	904	1250	250	330	◴	↻	**HH932145/10**
29,2	904	1250	260	320	◴	↻	**HH932145/15**
9,15	553	932	1500	2000	◴	↻	**HM231148/10**
9,21	553	932	1500	2000	◴	↻	**HM231149/10**
2,69	179	339	2700	3700	◴	↻	**JL730646/12**

* Other products also available

https://nppnovoteh.com

4. TAPERED ROLLER BEARINGS

4.2. Tapered roller bearings – inch dimensions



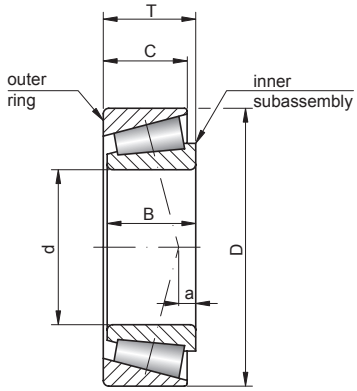

Bearing No.	Dimensions [mm]					
	d	D	B	C	T	a
L630349/10	152,400	192,088	24,000	19,000	25,000	10,20
L730649/10	152,400	203,200	28,575	21,438	28,575	11,40
LM330448/10	152,400	203,200	41,275	34,925	41,275	1,80
M231649/10	152,400	222,250	46,830	34,925	46,830	6,10
M231648/10	152,400	222,250	46,830	34,925	46,830	6,10
99600/99100	152,400	254,000	66,675	47,625	66,675	12,20
HH234048/10	152,400	307,975	93,662	66,675	88,900	26,40
H936340/10	155,575	330,200	79,375	53,975	85,725	16,80
H936340/16	155,575	342,900	79,375	53,975	85,725	16,80
L432349/10	158,750	205,583	23,812	18,258	23,812	8,60
46780/46720	158,750	225,425	39,688	33,338	41,275	2,50
JP16049/10	160,000	220,000	30,000	23,000	32,000	13,00
JM734445/10	160,000	240,000	44,500	37,000	46,000	5,10
JHM133449/17	160,000	255,000	69,850	52,388	63,500	17,30
HM237532/10	160,325	288,925	63,500	47,625	63,500	11,60
L433749/10	165,100	215,900	26,195	19,050	26,195	8,60
46790/46720	165,100	225,425	39,687	33,338	41,275	2,50
M533349S/10	165,100	231,976	44,000	35,999	45,000	1,50
67780/67720	165,100	247,650	47,625	38,100	47,625	4,80
86650/86100	165,100	254,000	46,038	33,338	46,038	1,50
M235145/13	165,100	254,000	46,038	33,338	46,038	4,60
94649/94113	165,100	288,925	63,500	47,625	63,500	0,80
HM237535/10	165,100	288,925	63,500	47,625	63,500	11,70
H238140/10	165,100	311,150	82,550	65,088	82,550	18,50
HH437549/10	165,100	336,550	95,250	69,850	92,075	21,30
46792/46720	166,687	225,425	39,688	33,338	41,275	2,50
67782/67720	168,275	247,650	47,625	38,100	47,625	4,80
H936349/10	168,275	330,200	79,375	53,975	85,725	16,80
JP17049/10	170,000	230,000	30,000	23,000	32,000	13,00
JHM534149/10	170,000	230,000	38,000	31,000	39,000	4,60
JM734449/10	170,000	240,000	44,500	37,000	46,000	5,10
86669/86100	170,000	254,000	46,038	33,338	46,038	1,50
L435049/10	171,450	222,250	24,608	19,050	25,400	10,70
HM535349/10	171,450	260,350	66,675	52,388	66,675	8,60
67786/67720	174,625	247,650	47,625	38,100	47,625	4,80
67787/67720	174,625	247,650	47,625	38,100	47,625	4,80
M236845/10	174,625	260,350	53,975	41,275	53,975	6,60
94687/94113	174,625	288,925	63,500	47,625	63,500	0,80
HM237542/10	174,625	288,925	63,500	47,625	63,500	11,70
H238148/10	174,625	311,150	82,550	65,088	82,550	18,50
LL735449/10	177,800	215,900	20,638	15,083	20,638	17,80
36990/36920	177,800	227,012	30,162	23,020	30,162	12,70
67790/67720	177,800	247,650	47,625	38,100	47,625	4,80
67791/67720	177,800	247,650	47,625	38,100	47,625	4,80
M236848/10	177,800	260,350	53,975	41,275	53,975	6,60
M236849/10	177,800	260,350	53,975	41,275	53,975	6,60
M238840/10	177,800	269,875	55,562	42,862	55,562	6,10
82680X/83620	177,800	279,400	61,912	43,655	61,912	4,10
94700/94113	177,800	288,925	63,500	47,625	63,500	0,80
HM237545/10	177,800	288,925	63,500	47,625	63,500	11,70
HM237545/13	177,800	289,974	63,500	48,000	63,500	11,60
H239640/10	177,800	319,964	85,725	65,088	88,900	22,40
93708/93125	179,975	317,500	63,500	46,038	63,500	7,90
JP18049/10	180,000	240,000	30,000	23,000	32,000	16,00
JM736149/10	180,000	250,000	45,000	37,000	47,000	9,00
LM236749/10A	184,150	235,229	33,000	28,000	34,000	5,10

- warehouse - order - phone



Weight [kg]	Basic load ratings [kN]		Limiting speed [rpm]		Basic makes*		Bearing No.
	dyn. C	stat. C_0	grease	oil	-	others	
1,56	132	288	1600	2100	◴	↻	**L630349/10**
2,43	179	339	2600	3400	◴	↻	**L730649/10**
3,48	262	556	1800	2400	◴	↻	**LM330448/10**
5,79	349	668	1700	2200	⬒	↻	**M231649/10**
5,7	349	668	1800	2400	◴	↻	**M231648/10**
12,6	611	1030	1500	2000	◴	↻	**99600/99100**
29,1	1130	1580	250	350	◴	↻	**HH234048/10**
31,6	960	1400	251	320	◴	↻	**H936340/10**
34,4	960	1400	260	350	◴	↻	**H936340/16**
1,92	136	280	1500	2000	◴	↻	**L432349/10**
5,14	281	644	1400	1900	⬒	↻	**46780/46720**
3,17	224	372	2400	3200	◴	↻	**JP16049/10**
7,17	393	759	1600	2100	◴	↻	**JM734445/10**
12,5	588	1040	1500	2000	◴	↻	**JHM133449/17**
17,8	763	1240	850	1200	◴	↻	**HM237532/10**
2,35	154	311	1900	2800	◴	↻	**L433749/10**
4,63	281	644	1400	1900	◴	↻	**46790/46720**
5,53	390	736	2200	3000	◴	↻	**M533349S/10**
7,88	375	779	1600	2100	⬒	↻	**67780/67720**
7,64	389	644	1600	2600	◴	↻	**86650/86100**
7,91	438	740	1600	2100	◴	↻	**M235145/13**
16,9	611	1070	850	1200	◴	↻	**94649/94113**
17,2	763	1240	850	1200	◴	↻	**HM237535/10**
28,3	1040	1700	250	320	◴	↻	**H238140/10**
38,1	1290	1930	260	350	◴	↻	**HH437549/10**
4,51	281	644	1900	2600	⬒	↻	**46792/46720**
7,57	375	779	1800	2600	◴	↻	**67782/67720**
29,6	960	1400	270	330	◴	↻	**H936349/10**
3,39	232	398	2400	3200	◴	↻	**JP17049/10**
4,31	310	590	1400	1800	⬒	↻	**JHM534149/10**
6,27	393	759	2200	3000	⬒	↻	**JM734449/10**
7,09	389	644	1600	2100	◴	↻	**86669/86100**
2,31	154	311	3000	4100	◴	↻	**L435049/10**
12,4	605	1180	1500	2000	◴	↻	**HM535349/10**
6,82	375	779	1800	2600	◴	↻	**67786/67720**
6,93	375	779	1200	1600	◴	↻	**67787/67720**
9,42	497	933	1500	2000	◴	↻	**M236845/10**
15,7	611	1070	850	1200	◴	↻	**94687/94113**
15,9	763	1240	850	1200	◴	↻	**HM237542/10**
26,6	1040	1700	300	500	◴	↻	**H238148/10**
1,44	113	252	3600	4800	◴	↻	**LL735449/10**
2,89	194	470	1300	1800	⬒	↻	**36990/36920**
6,6	375	779	1300	1700	⬒	↻	**67790/67720**
6,39	375	779	2200	3000	◴	↻	**67791/67720**
8,93	497	933	1900	2600	◴	↻	**M236848/10**
9,04	497	933	1500	2000	◴	↻	**M236849/10**
11	508	1000	1500	2000	◴	↻	**M238840/10**
13	524	979	1500	2000	◴	↻	**82680X/83620**
15,2	611	1070	850	1200	◴	↻	**94700/94113**
15,9	763	1240	850	1200	◴	↻	**HM237545/10**
15,9	763	1240	850	1200	◴	↻	**HM237545/13**
28,3	1030	1600	260	330	◴	↻	**H239640/10**
21,3	677	1330	800	1000	◴	↻	**93708/93125**
3,42	234	409	2400	3200	◴	↻	**JP18049/10**
6,66	401	786	1300	1700	◴	↻	**JM736149/10**
3,39	263	550	2400	3200	◴	↻	**LM236749/10A**

* Other products also available

https://nppnovoteh.com

4. TAPERED ROLLER BEARINGS

4.2. Tapered roller bearings – inch dimensions



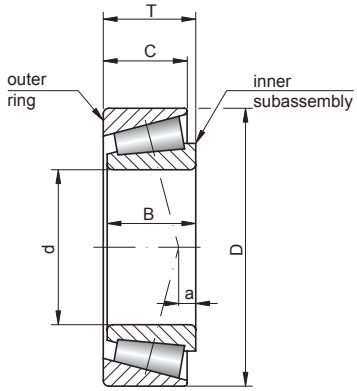

Bearing No.	Dimensions [mm]					
	d	D	B	C	T	a
LL537649/10	184,150	236,538	25,400	19,050	26,192	13,70
67883/67820	184,150	266,700	46,833	38,100	47,625	10,10
67884/67820	187,325	266,700	46,833	38,100	47,625	10,10
M238849/10	187,325	269,875	55,562	42,862	55,562	6,10
87737/87111	187,325	282,575	47,625	36,512	50,800	3,80
H239649/10	187,325	319,964	85,725	65,088	88,900	22,40
H239649/12	187,325	320,675	85,725	65,088	88,900	22,40
JM738249/10	190,000	260,000	44,000	36,500	46,000	10,90
JM738249A/10	190,000	260,000	44,000	36,500	46,000	10,90
67885/67820	190,500	266,700	46,833	38,100	47,625	10,20
87750/87111	190,500	282,575	47,625	36,512	50,800	3,80
93750/93125	190,500	317,500	63,500	46,038	63,500	7,90
HH840249/10	190,500	336,550	95,250	73,025	98,425	5,60
87762/87111	193,675	282,575	47,625	36,512	50,800	3,80
LL639249/10	196,850	241,300	23,017	17,462	23,812	17,40
L540049/10	196,850	254,000	27,783	21,433	28,575	14,20
LM739749/10	196,850	257,175	39,688	30,162	39,688	11,40
LM739749/19	196,850	266,700	39,688	30,162	39,688	11,40
JHM840449/10	200,000	300,000	62,000	51,000	65,000	8,10
M241543/10	200,025	292,100	57,945	46,038	57,945	4,80
93787/93125	200,025	317,500	63,500	46,038	63,500	7,90
H247535/10	200,025	384,175	112,712	90,488	112,712	27,90
HH144642/14	200,025	393,700	111,125	84,138	111,125	33,80
LL641149/10	203,200	261,142	27,783	21,433	28,575	15,70
LM241149/10	203,200	276,225	42,862	34,133	42,862	1,80
67983/67920	203,200	282,575	46,038	36,512	46,038	16,00
M241547/10	203,200	292,100	57,945	46,038	57,945	4,80
93800/93125	203,200	317,500	63,500	46,038	63,500	7,90
HM542948/11	203,200	346,075	80,962	60,325	79,375	8,60
M241549/10	204,788	292,100	57,945	46,038	57,945	4,80
67985/67920	206,375	282,575	46,038	36,512	46,038	16,00
H242649/10	206,375	336,550	100,012	77,788	98,425	25,40
67989/67920	209,550	282,575	46,038	36,512	46,038	16,00
93825/93125	209,550	317,500	63,500	46,038	63,500	7,90
LM742745/10	212,725	285,750	46,038	34,925	46,038	14,20
LM742749/10	215,900	285,750	46,038	34,925	46,038	14,20
543085/543114	215,900	290,010	31,750	22,225	31,750	13,00
LM742747/10	216,408	285,750	49,212	34,925	46,038	14,20
M244249/10	220,663	314,325	61,912	49,212	61,912	4,60
LM844049/10	223,838	295,275	46,038	34,925	46,038	17,00
544090/544118	228,600	300,038	31,750	23,812	33,338	15,70
88900/88126	228,600	320,675	49,212	33,338	50,800	14,20
88900/88128	228,600	327,025	49,212	34,925	52,388	14,20
8573/8520	228,600	327,025	52,388	36,512	52,388	7,60
96900/96140	228,600	355,600	66,675	47,625	68,262	17,00
HM746645/10	228,600	355,600	69,850	50,800	69,850	6,90
HM746646/10	228,600	355,600	69,850	50,800	69,850	6,90
M249732/10	228,600	358,775	71,438	53,975	71,438	6,90
HH949549/10	228,600	488,950	111,125	73,025	123,825	39,90
LL244549/10	231,775	268,288	21,500	18,500	22,500	15,70
544091/544118	231,775	300,038	31,750	23,812	33,338	15,70
LM245848/10	231,775	317,500	52,388	36,512	47,625	2,50
M246942/10	231,775	336,550	65,088	50,800	65,088	4,80
M249734/10	231,775	358,775	71,438	53,975	71,438	6,90
LM446349/10	234,950	311,150	46,038	33,338	46,038	6,60
LM545849/10	234,950	314,325	49,212	36,512	49,212	8,40

- warehouse - order - phone

https://nppnovoteh.com

Weight [kg]	Basic load ratings [kN]		Limiting speed [rpm]		Basic makes*		Bearing No.
	dyn. C	stat. C_0	grease	oil	-	others	
2,6	161	337	2800	3800	◴	↻	**LL537649/10**
8,52	386	842	1500	2000	◴	↻	**67883/67820**
8,18	386	842	1500	2000	◴	↻	**67884/67820**
9,87	508	1000	1700	2300	◴	↻	**M238849/10**
9,77	398	690	1500	2000	◴	↻	**87737/87111**
26,4	1030	1600	670	900	◴	↻	**H239649/10**
26,6	1030	1600	250	320	◴	↻	**H239649/12**
6,84	399	806	1200	1600	◴	↻	**JM738249/10**
6,71	399	806	1200	1600	◴	↻	**JM738249A/10**
7,84	386	842	1600	2100	⏏	↻	**67885/67820**
9,42	398	690	1500	2000	◴	↻	**87750/87111**
19,8	677	1330	600	800	◴	↻	**93750/93125**
36,6	1130	2090	260	350	◴	↻	**HH840249/10**
9,06	398	690	1500	2000	◴	↻	**87762/87111**
2	160	354	1200	1600	◴	↻	**LL639249/10**
3,36	195	408	1900	2800	◴	↻	**L540049/10**
5,28	295	722	900	1300	◴	↻	**LM739749/10**
6,2	295	722	2200	3000	◴	↻	**LM739749/19**
15,5	682	1290	850	1200	◴	↻	**JHM840449/10**
12,4	588	1180	1500	2000	◴	↻	**M241543/10**
18,3	677	1330	600	800	◴	↻	**93787/93125**
60,3	1640	3130	280	360	◴	↻	**H247535/10**
60,6	1650	2610	260	380	◴	↻	**HH144642/14**
3,52	192	416	2100	2800	◴	↻	**LL641149/10**
7,03	406	815	1600	2100	◴	↻	**LM241149/10**
8,71	393	881	1900	2600	◴	↻	**67983/67920**
12	588	1180	1700	2300	◴	↻	**M241547/10**
17,8	677	1330	850	1200	◴	↻	**93800/93125**
7,35	922	1430	1800	2600	◴	↻	**HM542948/11**
11,7	588	1180	1700	2300	◴	↻	**M241549/10**
8,34	393	881	1500	2000	◴	↻	**67985/67920**
33,2	1250	2340	270	330	◴	↻	**H242649/10**
7,97	393	881	1500	2000	◴	↻	**67989/67920**
16,8	677	1330	850	1200	⏏	↻	**93825/93125**
8,05	398	899	1500	2000	◴	↻	**LM742745/10**
7,66	398	899	1600	2600	⏏	↻	**LM742749/10**
5,53	221	457	2200	3000	◴	↻	**543085/543114**
8,58	398	813	1000	2000	◴	↻	**LM742747/10**
14,6	682	1370	850	1200	◴	↻	**M244249/10**
8,1	403	919	1500	2000	◴	↻	**LM844049/10**
5,57	220	478	2200	3000	◴	↻	**544090/544118**
11	431	826	1500	2000	⏏	↻	**88900/88126**
11,5	431	826	1700	2300	◴	↻	**88900/88128**
13	517	1070	1500	2000	◴	↻	**8573/8520**
23,3	703	1460	600	1000	⏏	↻	**96900/96140**
26,69	932	1690	250	340	◴	↻	**HM746645/10**
26,2	932	1730	670	900	◴	↻	**HM746646/10**
26,6	896	1890	270	330	◴	↻	**M249732/10**
99,2	1750	2670	260	360	◴	↻	**HH949549/10**
1,85	135	361	3100	4100	◴	↻	**LL244549/10**
5,29	220	478	2500	3300	◴	↻	**544091/544118**
6,97	508	952	900	1300	◴	↻	**LM245848/10**
18,4	773	1600	600	800	◴	↻	**M246942/10**
26,9	896	1890	260	350	◴	↻	**M249734/10**
8,78	432	927	1400	1900	⏏	↻	**LM446349/10**
9,79	509	1080	1500	2000	◴	↻	**LM545849/10**

* Other products also available

https://nppnovoteh.com

4. TAPERED ROLLER BEARINGS

4.2. Tapered roller bearings – inch dimensions



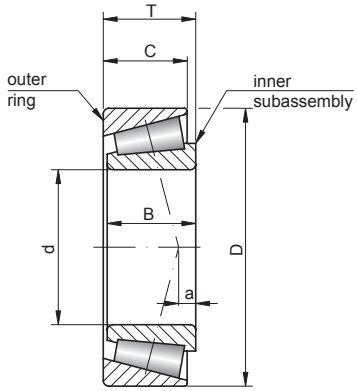

Bearing No.	Dimensions [mm]					
	d	D	B	C	T	a
88925/88126	234,950	320,675	49,212	33,338	50,800	14,20
88925/88128	234,950	327,025	49,212	34,925	52,388	14,20
8575/8520	234,950	327,025	52,388	36,512	52,388	7,60
96925/96140	234,950	355,600	66,675	47,625	68,262	17,00
M252330/10	234,950	381,000	74,612	57,150	74,612	6,60
H247549/10	234,950	384,175	112,712	90,488	112,712	27,90
M246949/10	237,330	336,550	65,088	50,800	65,088	4,80
M249736/10	237,330	358,775	71,438	53,975	71,438	6,90
8578/8520	241,300	327,025	52,388	36,512	52,388	7,60
28880/28820	247,650	304,800	22,225	15,875	22,225	17,30
M348449/10	247,650	346,075	63,500	50,800	63,500	1,30
M252337/10	247,650	381,000	74,612	57,150	74,612	6,60
HH249949/10	247,650	406,400	117,475	93,662	115,888	28,70
LL648449/15	254,000	315,912	31,750	22,225	31,750	22,30
29875/29820	254,000	323,850	22,225	15,875	22,225	21,10
M249749/10	254,000	358,775	71,438	53,975	71,438	6,90
HM252343/10	254,000	422,275	79,771	66,675	86,121	9,30
HM252344/10	254,000	422,275	79,771	66,675	86,121	9,40
HH953749/10	254,000	533,400	120,650	77,788	133,350	45,50
M349549/10	257,175	342,900	57,150	44,450	57,150	2,50
M349549A/10	257,175	342,900	57,150	44,450	57,150	2,50
HM252348/10	260,350	422,275	79,771	66,675	86,121	9,40
HM252349/10	260,350	422,275	79,771	66,675	86,121	9,40
38880/38820	263,525	325,438	28,575	25,400	28,575	20,30
LM451345/10	263,525	355,600	57,150	44,450	57,150	5,10
29880/29820	266,700	323,850	22,225	15,875	22,225	21,10
38885/38820	266,700	325,438	28,575	25,400	28,575	20,30
LM451349/10	266,700	355,600	57,150	44,450	57,150	5,10
LM451349A/10	266,700	355,600	57,150	44,450	57,150	5,10
LM451349AX/10	266,700	355,600	57,150	44,450	57,150	5,10
H852849/10	266,700	444,500	117,475	88,900	120,650	0,50
M252349/10	269,875	381,000	74,612	57,150	74,612	6,60
L853049/10	276,225	352,425	34,925	23,812	36,512	35,10
LL352149/10	279,400	317,500	24,384	18,288	24,384	20,30
L555233/10	279,400	374,650	47,625	34,925	47,625	17,50
LM654642/10	279,982	380,898	65,088	49,212	65,088	11,40
545112/545141	285,750	358,775	31,750	22,225	33,338	32,80
LM654649/10	285,750	380,898	65,088	49,212	65,088	11,40
M255449/10	288,925	406,400	77,788	60,325	77,788	4,10
L55249/10	292,100	374,650	47,625	34,925	47,625	17,50
84115/84155	292,100	393,700	50,800	44,450	63,500	36,60
HH258248/10	299,974	495,300	141,288	114,300	141,288	34,50
HM256849/10	300,038	422,275	82,550	63,500	82,550	5,60
L357049/10	304,800	393,700	50,800	38,100	50,800	12,70
LM757049/10	304,800	406,400	63,500	47,625	63,500	16,30
M959442/10	304,800	499,948	79,375	53,975	101,600	105,40
LL957049/10	312,738	358,775	20,638	14,288	22,225	79,50
H859049/10	314,325	495,300	119,062	88,900	120,650	8,40
HM259049/10	317,500	447,674	85,725	68,262	85,725	4,80
HM259048/10	317,500	447,675	85,725	68,262	85,725	4,80
H961649/10	317,500	622,300	131,762	82,550	147,638	60,50
LL758744/15	323,850	381,000	28,575	20,638	28,575	35,10
L860048/10	330,200	415,925	47,625	34,925	47,625	35,30
L860049/10	330,200	415,925	47,625	34,925	47,625	35,30
HM261049/10	333,375	469,900	90,488	71,438	90,488	6,10
LM361649/10	342,900	450,850	66,675	52,388	66,675	8,90

- warehouse - order - phone

https://nppnovoteh.com



Weight [kg]	Basic load ratings [kN]		Limiting speed [rpm]		Basic makes*		Bearing No.
	dyn. C	stat. C_0	grease	oil	-	others	
10,1	431	826	1700	2300			**88925/88126**
11	431	826	1500	2000			**88925/88128**
12	517	1070	1700	2300			**8575/8520**
22,1	703	1460	600	800			**96925/96140**
33,8	982	2070	250	340			**M252330/10**
49,7	1640	3130	260	350			**H247549/10**
17,4	773	1600	850	1200			**M246949/10**
25,3	896	1890	670	900			**M249736/10**
11,1	517	1070	1500	2000			**8578/8520**
3,23	146	393	2200	3200			**28880/28820**
17,4	787	1650	850	1200			**M348449/10**
30,7	982	2070	255	360			**M252337/10**
60,2	1930	3790	280	380			**HH249949/10**
5,07	250	572	1600	2200			**LL648449/15**
4,44	148	414	2500	3400			**29875/29820**
21,2	896	1890	600	800			**M249749/10**
54,9	1280	2030	280	380			**HM252343/10**
44	1320	2120	260	350			**HM252344/10**
125	2100	3130	450	600			**HH953749/10**
13,4	667	1440	850	1200			**M349549/10**
13,1	667	1440	850	1200			**M349549A/10**
41	1280	2030	260	350			**HM252348/10**
42,4	1320	2120	260	350			**HM252349/10**
5,2	2170	572	900	1300			**38880/38820**
15,4	688	1520	850	1200			**LM451345/10**
3,54	148	414	2800	3800			**29880/29820**
5,68	217	572	1800	2400			**38885/38820**
14,8	688	1520	850	1200			**LM451349/10**
14,5	688	1520	850	1200			**LM451349A/10**
14,5	688	1520	850	1200			**LM451349AX/10**
72,7	1790	3550	260	380			**H852849/10**
25,7	982	2070	670	900			**M252349/10**
7,73	326	746	1600	2100			**L853049/10**
2,59	159	473	3000	4000			**LL352149/10**
14	510	1150	1400	1800			**L555233/10**
21,2	708	1770	600	800			**LM654642/10**
6,88	851	1700	1200	1600			**545112/545141**
19,9	708	1770	600	800			**LM654649/10**
30,5	1170	2560	260	350			**M255449/10**
11,8	510	1150	1700	2300			**L55249/10**
18	486	985	850	1200			**84115/84155**
110	2810	5640	380	500			**HH258248/10**
35,1	1270	2790	260	350			**HM256849/10**
14,4	575	1330	1400	1800			**L357049/10**
21,4	754	1770	600	800			**LM757049/10**
66,1	1140	1970	280	360			**M959442/10**
3,11	131	353	2200	3200			**LL957049/10**
82,7	1920	3990	260	360			**H859049/10**
41,8	1430	3160	260	350			**HM259049/10**
40,7	1320	2810	260	350			**HM259048/10**
178	2700	4410	380	500			**H961649/10**
5,38	239	670	2300	3000			**LL758744/15**
13,5	475	1200	850	1200			**L860048/10**
14,1	475	1200	1400	1800			**L860049/10**
48,6	1570	3500	260	350			**HM261049/10**
26,3	953	2250	670	900			**LM361649/10**

* Other products also available

https://nppnovoteh.com

4. TAPERED ROLLER BEARINGS

4.2. Tapered roller bearings – inch dimensions



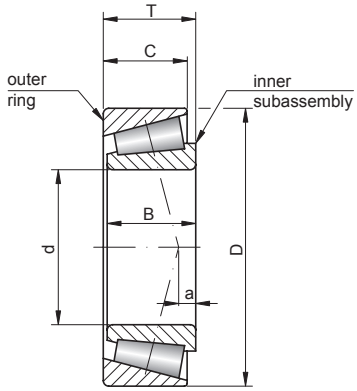

Bearing No.	Dimensions [mm]					
	d	D	B	C	T	a
LM961548/11	342,900	457,098	63,500	47,625	68,262	56,40
HM262748/10	346,075	488,950	95,250	74,612	95,249	6,40
HM262749/10	346,075	488,950	95,250	74,612	95,250	6,40
L163149/10	355,600	444,500	60,325	47,625	60,325	7,10
LL762649/10	361,950	401,638	21,430	15,875	21,430	43,90
LL562749/10	361,950	406,400	23,812	17,462	23,812	37,80
HM265049/10	368,249	523,875	101,600	79,375	101,600	8,30
LL264648/10	374,650	431,800	28,575	20,638	28,575	27,90
LM565943/10	374,650	522,288	84,138	61,912	85,725	8,90
L865547/12	381,000	479,425	47,625	34,925	49,212	42,90
LM565949/10	381,000	522,288	84,138	61,912	85,725	9,00
LM565949/12	381,000	523,875	84,138	61,912	85,725	9,00
HM266446/10	381,000	546,100	104,775	82,550	104,775	7,10
HM266447/10	381,000	546,100	104,775	82,550	104,775	7,10
M268730/10	381,000	590,550	114,300	88,900	114,300	18,30
LL365348/10	384,175	441,325	28,575	20,638	28,575	30,00
HM266448/10	384,175	546,100	104,775	82,550	104,775	7,10
HM266449/10	384,175	546,100	104,775	82,550	104,775	7,10
LM665949/10	385,762	514,350	82,550	63,500	82,550	16,30
M667935/11	387,248	546,100	87,312	68,262	87,312	17,80
LL566848/10	403,225	460,375	28,575	20,638	28,575	41,40
L467549/10	406,400	508,000	61,912	47,625	61,912	20,30
LM567949/10	406,400	549,275	84,138	61,912	85,725	15,60
H969249/10	406,400	762,000	161,925	107,950	180,975	79,20
M667948/11	409,575	545,100	87,312	68,262	87,312	17,80
M268749/10	415,925	590,550	114,300	88,900	114,300	18,30
80385/80325	431,800	533,400	46,038	34,925	46,038	23,40
80170/80217	431,800	552,450	44,450	31,750	44,450	26,20
LM869448/10	431,800	571,500	74,612	52,388	74,612	50,00
80176/80217	447,675	552,450	44,450	31,750	44,450	26,20
M270749/10	447,675	635,000	120,650	95,250	120,650	8,10
80180/80217	457,200	552,450	44,450	31,750	44,450	26,20
L570649/10	457,200	573,088	74,612	57,150	74,612	27,20
LM770949/10	457,200	603,250	84,138	60,325	85,725	30,50
LM272235/10	457,200	615,950	85,725	66,675	85,725	12,40
LL771948/11	476,250	565,150	41,275	31,750	41,275	58,40
M272749/10	479,425	679,450	128,588	101,600	128,588	8,10
80480/80425	482,600	615,950	46,038	41,275	53,975	36,60
LM272249/10	482,600	615,950	85,725	66,675	85,725	12,40
LM772748/10	488,950	634,873	84,138	61,912	84,138	40,90
M274149/10	501,650	711,200	136,525	106,632	136,525	10,70
LL575343/10	533,400	635,000	50,800	38,100	50,800	50,80
M276449/10	536,575	761,873	146,050	114,300	146,050	9,70
LL575349/10	539,750	635,000	50,800	38,100	50,800	50,80
L476549/10	549,275	692,150	80,962	61,912	80,962	32,30
LM377449/10	558,800	736,600	104,775	80,962	104,775	15,70
LL777148/10	571,500	660,400	44,450	32,545	46,037	67,90
M278749/10	571,500	812,800	155,575	120,650	155,575	11,40
LL778149/10	584,200	685,800	49,212	34,925	49,212	64,50
680235/680270	596,900	685,800	31,750	25,400	31,750	96,00
L879946/10	609,396	762,000	92,075	71,438	95,250	57,90
L879947/10	609,600	762,000	92,075	71,438	95,250	57,90
L580049/10	609,600	774,700	79,375	60,325	85,725	45,20
80780/80720	635,000	736,600	53,975	41,275	57,150	69,30
L281148/10	660,400	812,800	95,250	73,025	95,250	27,90
LL481448/11	673,100	793,750	61,912	50,800	66,675	53,80

- warehouse - order - phone

Weight [kg]	Basic load ratings [kN]		Limiting speed [rpm]		Basic makes*		Bearing No.
	dyn. C	stat. C_0	grease	oil	-	others	
28,2	807	1990	260	340	◴	↷	**LM961548/11**
53,79	1590	3440	260	380	◴	↷	**HM262748/10**
55,9	1690	3780	260	360	◴	↷	**HM262749/10**
20,7	718	1980	600	800	◴	↷	**L163149/10**
3,09	158	509	2400	3200	◴	↷	**LL762649/10**
3,68	194	584	1900	2800	◴	↷	**LL562749/10**
68,7	1940	4360	260	380	◴	↷	**HM265049/10**
6,19	249	742	2200	3000	◴	↷	**LL264648/10**
51,6	1360	2980	260	350	◴	↷	**LM565943/10**
18,2	582	1370	600	800	◴	↷	**L865547/12**
49,2	1360	2980	260	350	◴	↷	**LM565949/10**
50,4	1360	2980	260	350	◴	↷	**LM565949/12**
76,6	1940	4210	260	360	◴	↷	**HM266446/10**
79,8	2100	4740	280	380	◴	↷	**HM266447/10**
118	2440	5550	380	500	◴	↷	**M268730/10**
6,15	228	705	2200	3000	◴	↷	**LL365348/10**
75,1	1940	4210	280	380	◴	↷	**HM266448/10**
78,2	2100	4740	260	380	◴	↷	**HM266449/10**
45,1	1330	3200	260	350	◴	↷	**LM665949/10**
65	1600	3980	280	380	◴	↷	**M667935/11**
6,53	225	727	1600	2100	◴	↷	**LL566848/10**
26,3	842	2280	670	900	◴	↷	**L467549/10**
53,6	1400	3140	260	360	◴	↷	**LM567949/10**
328	4100	6890	380	500	◴	↷	**H969249/10**
53,5	1440	3450	260	360	◴	↷	**M667948/11**
98,7	2440	5550	260	360	◴	↷	**M268749/10**
20,6	612	1560	800	1000	◴	↷	**80385/80325**
25,3	6140	1590	670	900	◴	↷	**80170/80217**
47,3	1210	2860	260	350	◴	↷	**LM869448/10**
21,4	614	1590	600	800	◴	↷	**80176/80217**
121	2800	6390	450	600	◴	↷	**M270749/10**
19,13	614	1590	600	1000	◴	↷	**80180/80217**
41,6	1210	3230	260	350	◴	↷	**L570649/10**
61,2	1460	3470	260	380	◴	↷	**LM770949/10**
71,1	1660	4120	260	360	◴	↷	**LM272235/10**
19,2	460	1460	600	800	◴	↷	**LL771948/11**
149	3190	7380	450	600	◴	↷	**M272749/10**
34,8	643	1750	260	350	◴	↷	**80480/80425**
58,5	1660	4120	280	360	◴	↷	**LM272249/10**
63,6	1590	3910	280	360	◴	↷	**LM772748/10**
170	3460	8070	380	500	◴	↷	**M274149/10**
28,2	762	2080	270	350	◴	↷	**LL575343/10**
212	3930	9250	380	500	◴	↷	**M276449/10**
26,1	762	2080	670	900	◴	↷	**LL575349/10**
67,1	1490	4010	280	380	◴	↷	**L476549/10**
118	2520	6390	380	500	◴	↷	**LM377449/10**
22,8	680	1960	600	1000	◴	↷	**LL777148/10**
254	4440	10500	380	500	◴	↷	**M278749/10**
28,8	783	2280	270	340	◴	↷	**LL778149/10**
16,7	337	1020	850	1200	◴	↷	**680235/680270**
92,9	1940	5530	260	360	◴	↷	**L879946/10**
92,7	1940	5530	260	360	◴	↷	**L879947/10**
85,8	1980	4640	260	360	◴	↷	**L580049/10**
34,3	641	1900	260	350	◴	↷	**80780/80720**
98,5	2170	6030	260	360	◴	↷	**L281148/10**
52,2	1340	4370	260	350	◴	↷	**LL481448/11**

* Other products also available

https://nppnovoteh.com

4. TAPERED ROLLER BEARINGS

4.2. Tapered roller bearings – inch dimensions



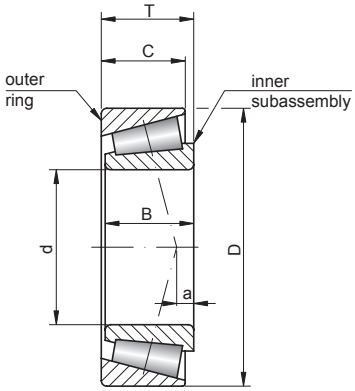

Bearing No.	Dimensions [mm]					
	d	D	B	C	T	a
LL382149/10	698,500	819,150	63,500	50,800	63,500	54,60
LM283649/10	749,300	990,600	160,337	123,000	159,500	6,10
LL483449/18	759,925	889,000	69,850	50,800	69,850	62,30
L183448/10	759,925	889,000	88,900	72,000	88,900	34,50
LL483449/18	762,000	889,000	69,850	50,800	69,850	62,30
L183449/10	762,000	889,000	88,900	72,000	88,900	34,50
LL584449/10	801,688	914,400	58,738	41,275	58,738	79,00
LL687949/10	977,900	1130,300	63,500	47,625	66,675	114,80
LL788345/10	1063,625	1219,200	65,088	42,862	65,088	142,50
LL788349/10	1066,800	1219,200	65,088	42,862	65,088	142,50
LL889049/10	1270,000	1435,100	65,088	47,625	69,850	216,90
LL789749/10	1689,100	1844,675	68,262	42,862	68,262	244,30

- warehouse - order - phone

https://nppnovoteh.com

Weight [kg]	Basic load ratings [kN]		Limiting speed [rpm]		Basic makes*		Bearing No.
	dyn. C	stat. C_0	grease	oil	-	others	
54,6	1030	3280	280	380	◴	↝	**LL382149/10**
327	5110	13500	380	500	◴	↝	**LM283649/10**
68,4	1340	4370	280	380	◴	↝	**LL483449/18**
89,9	2010	6300	260	360	◴	↝	**L183448/10**
67	1340	4370	260	380	◴	↝	**LL483449/18**
88,2	2010	6300	260	360	◴	↝	**L183449/10**
52,6	1060	3570	260	350	◴	↝	**LL584449/10**
100	1640	5390	180	260	◴	↝	**LL687949/10**
107	1680	5780	380	500	◴	↝	**LL788345/10**
104	1680	5780	380	500	◴	↝	**LL788349/10**
146	1810	6800	450	600	◴	↝	**LL889049/10**
176	2100	9010	380	500	◴	↝	**LL789749/10**

* Other products also available



https://nppnovoteh.com

4. TAPERED ROLLER BEARINGS

4.3. Tapered roller bearings – inch dimensions, auxiliary table for data retrieval according to index

Bearing No.	d	Bearing No.	d	Bearing No.	d	Bearing No.	d
00050/00150	12,700	**15119/15245**	30,213	**2582/2523**	31,750	**29582/29520**	60,000
02473/02420	25,400	**15120/15245**	30,213	**2585/2520**	33,338	**29585/29520**	63,500
02474/02420	28,575	**15123/15245**	31,750	**2585/2523**	33,338	**29585/29521**	63,500
02475/02420	31,750	**15125/15245**	31,750	**2585/2523S**	33,338	**29585/29522**	63,500
02476/02420	31,750	**15126/15245**	31,750	**25877/25820**	34,925	**29586/29520**	63,500
02872/02820	28,575	**15578/15523**	25,400	**25877/25821**	34,925	**29590/29520**	66,675
02875/02820	31,750	**15580/15523**	26,988	**25878/25821**	34,925	**29675/29620**	69,850
02876/02820	31,750	**15590/15520**	28,575	**25880/25821**	36,487	**29675/29630**	69,850
02877/02820	34,925	**15590/15523**	28,575	**26112/26283**	28,575	**29680/29620**	70,637
02878/02820	34,925	**16137/16284**	34,925	**26112/26283S**	28,575	**29685/29620**	73,025
03062/03162	15,875	**16150/16282**	38,100	**26131/26283**	33,338	**29688/29620**	73,817
05062/05185	15,875	**16150/16284**	38,100	**2682/2630**	26,162	**2984/2924**	46,038
05066/05185	16,993	**17098/17244**	24,981	**2682/2631**	26,162	**29875/29820**	254,000
05075/05185	19,050	**17118/17244**	29,987	**2684/2631**	22,225	**29880/29820**	266,700
05079/05185	19,987	**17119/17244**	30,162	**2687/2631**	25,400	**31590/31520**	33,338
07079/07196	20,000	**1755/1729**	22,225	**26877/26822**	36,512	**31593/31520**	34,925
07087/07196	22,225	**17580/17520**	15,875	**26878/26822**	38,100	**31594/31520**	34,925
07093/07196	23,812	**1775/1729**	19,050	**2688/2631**	26,988	**31594/31521**	34,925
07096/07196	25,159	**1779/1729**	23,812	**26880/26822**	39,688	**31597/31520**	36,512
07097/07196	25,000	**1780/1729**	25,400	**26881/26822**	39,688	**3187/3120**	30,162
07098/07196	24,981	**18200/18337**	50,800	**26882/26820**	41,275	**3188/3120**	31,750
07100/07196	25,400	**18587/18520**	39,688	**26882/26822**	41,275	**3188S/3120**	31,750
07100/07204	25,400	**18590/18520**	41,275	**26882/26822A**	41,275	**3189/3120**	25,400
08125/08231	31,750	**18685/18620**	44,450	**26882/26823**	41,275	**3192/3120**	28,575
09062/09195	15,875	**18690/18620**	46,038	**26882/26824**	41,275	**3193/3120**	31,750
09067/09194	19,050	**18780/18720**	46,038	**26883/26822**	35,000	**3196/3120**	33,338
09067/09195	19,050	**18790/18720**	50,800	**26884/26822**	42,875	**3198/3120**	28,575
09067/09196	19,050	**18790/18724**	50,800	**26885/26822**	41,275	**3198/3130**	28,575
09074/09195	19,050	**19138/19283**	34,976	**26886/26822**	42,875	**33225/33462**	57,150
09078/09195	19,050	**19150/19268**	38,100	**2689/2631**	28,575	**33269/33462**	68,262
09081/09195	20,625	**19150/19281**	38,100	**2690/2631**	29,367	**33275/33462**	69,850
11162/11300	41,275	**19150/19283**	38,100	**27687/27620**	82,550	**33281/33462**	71,438
11162/11315	41,275	**1975/1932**	22,225	**27689/27620**	83,345	**33287/33462**	73,025
11590/11520	15,875	**1985/1930**	28,575	**27690/27620**	83,345	**33287/33472**	73,025
12168/12303	42,862	**1985/1931**	28,575	**27691/27620**	83,345	**336/332**	41,275
12175/12303	44,450	**1985/1932**	28,575	**27695/27620**	84,976	**3379/3320**	34,925
12580/12520	20,638	**1986/1922**	25,400	**2776/2720**	38,100	**3381/3320**	38,100
1280/1220	22,225	**1987/1932**	26,975	**2777/2720**	38,100	**3382/3320**	39,688
13175/13318	44,450	**1988/1922**	28,575	**2780/2720**	36,487	**3382/3321**	39,688
13181/13318	46,038	**1988/1932**	28,575	**2785/2720**	33,338	**3382/3328**	39,688
13685/13621	38,100	**21063/21212**	15,875	**2786/2720**	34,925	**3382/3331**	39,688
13687/13620	38,100	**21075/21212**	19,050	**2788/2720**	38,100	**3382/3339**	39,688
13687/13621	38,100	**22168/22325**	42,862	**27880/27820**	38,100	**3386/3320**	39,688
1380/1328	22,225	**22780/22720**	42,862	**27881/27820**	38,100	**33880/33821**	38,100
1380/1329	22,225	**23092/23256**	23,812	**2788A/2720**	38,100	**33885/33821**	44,450
13889/13830	38,100	**23100/23256**	25,400	**2789/2720**	39,688	**33885/33822**	44,450
13889/13836	38,100	**23491/23420**	31,750	**2790/2720**	33,338	**33889/33821**	50,800
14116/14274	30,226	**23691/23620**	35,000	**2793/2720**	34,925	**33890/33821**	52,388
14116/14276	30,226	**2474/2420**	28,575	**2793/2729**	34,925	**33891/33821**	52,388
14116/14283	30,226	**24780/24720**	41,275	**2793/2735X**	34,925	**33895/33821**	53,975
14117A/14276	30,000	**25570/25520**	36,512	**2794/2720**	36,487	**33895/33822**	53,975
14124/14276	31,750	**25572/25520**	38,100	**2796/2720**	34,925	**339/332**	35,000
14125A/14276	31,750	**25577/25520**	42,875	**28137/28317**	34,925	**342/332**	41,275
14130/14274	33,338	**25577/25522**	42,875	**28150/28300**	38,100	**34274/34478**	69,952
14130/14276	33,338	**25578/25520**	42,862	**28150/28315**	38,100	**34274/34492A**	69,952
14131/14276	33,338	**2558/2523**	30,163	**28158/28300**	40,000	**342S/332**	42,875
14137A/14276	34,925	**25580/25520**	44,450	**28579/28520**	49,987	**34300/34478**	76,200
14138A/14276	34,925	**25580/25522**	44,450	**28579/28521**	49,987	**34301/34478**	76,200
14139/14276	34,976	**25581/25520**	44,450	**28580/28521**	50,800	**34306/34478**	77,788
14585/14525	34,925	**25582/25520**	44,450	**28580A/28521**	50,800	**34307/34478**	77,788
15100/15245	25,400	**25584/25520**	44,983	**28584/28521**	52,388	**344/332**	40,000
15101/15243	25,400	**25590/25519**	45,618	**28678/28622**	50,800	**344A/332**	40,000
15101/15244	25,400	**25590/25520**	45,618	**28680/28622**	55,562	**3476/3420**	31,750
15101/15245	25,400	**25590/25521**	45,618	**28682/28622**	57,150	**3478/3420**	34,925
15101/15250	25,400	**25590/25522**	45,618	**2878/2820**	34,925	**3479/3420**	36,512
15102/15245	25,400	**25590/25523**	45,618	**2879/2820**	31,750	**3490/3420**	38,100
15103/15245	26,157	**25590/25526**	45,618	**28880/28820**	247,650	**350A/354A**	40,000
15106/15245	26,988	**25592/25520**	46,038	**28985/28919**	60,325	**35176/35326**	44,450
15112/15245	28,575	**2578/2523**	28,575	**28985/28920**	60,325	**355/354A**	44,450
15113/15245	28,575	**2580/2520**	31,750	**28985/28921**	60,325	**355A/354A**	44,450
15116/15245	30,112	**2580/2523**	31,750	**28990/28920**	61,912	**3576/3525**	41,275
15117/15245	29,987	**2580/2523S**	31,750	**28995/28920**	62,738	**3577/3525**	41,275
15118/15245	30,213	**2581/2523**	33,338	**29580/29520**	60,000	**3578/3520**	44,450

Bearing No.	d
3578/3525	44,450
3578/3526	44,450
3579/3525	42,862
358/354A	45,000
3580/3525	38,100
3585/3525	41,275
3586/3525	45,237
359A/354A	46,038
359S/352	46,038
359S/354A	46,038
36137/36300	34,925
365/362A	50,000
3659/3620	23,812
365A/362A	41,275
365S/362A	49,212
366/362A	50,000
36690/36620	146,050
36691/36620	146,050
367/362A	45,000
368/362	50,800
368A/362	50,800
368A/362A	50,800
368A/363	50,800
368S/362A	51,592
36990/36920	177,800
369A/362A	47,625
369S/362A	47,625
370A/362A	50,800
37425/37625	107,950
37431/37625	109,538
37431A/37625	109,538
375/374	50,800
3767/3720	52,388
3775/3720	50,800
3776/3720	44,983
3777/3720	46,038
3778/3720	47,625
3779/3720	47,625
3780/3720	50,800
3780/3726	50,800
3780/3730	50,800
3780/3732	50,800
3781/3720	49,212
3782/3720	44,450
3784/3720	50,800
385/382A	55,000
385A/382A	50,800
385AX/382A	50,800
385X/382A	55,000
386A/382A	47,625
387/382	57,150
3872/3820	34,925
3875/3820	38,100
3876/3820	38,100
3877/3820	41,275
3877/3821	41,275
3878/3820	36,512
3879/3820	40,000
387A/382	57,150
387A/382A	57,150
387A/382S	57,150
387A/383A	57,150
387AS/382A	57,150
387S/382A	57,150
3880/3820	41,275
38880/38820	263,525
38885/38820	266,700
388A/382A	57,531
389/382A	55,575
389A/382A	53,975
390/394A	57,150
390A/394A	63,500
390A/394AS	63,500

Bearing No.	d
392/394A	61,912
39236/39412	59,987
39250/39412	63,500
395/394A	63,500
39573/39520	50,800
39575/39520	50,800
39578/39520	53,975
39580/39520	57,150
39581/39520	57,150
39585/39520	63,500
39585A/39520	63,500
39586/39520	64,988
39590/39520	66,675
39590/39521	66,675
39591/39520	66,675
395A/394A	66,675
395S/394A	66,675
396/394A	50,000
397/394A	60,000
3975/3920	50,800
3977/3920	60,000
3979/3920	57,150
398/394A	50,800
3980/3920	60,325
3982/3920	63,500
3984/3920	66,675
3984/3925	66,675
3984/3926	66,675
3994/3920	66,675
399A/394A	68,262
399AS/394A	68,262
41125/41286	28,575
41126/41286	28,575
418/414	38,100
419/414	41,275
420/414	40,000
42346/42584	87,960
42350/42584	88,900
42368/42584	93,662
42373/42584	94,975
42375/42584	95,250
42381/42584	96,838
42687/42620	76,200
42688/42620	76,200
42690/42620	77,788
43112/43312	28,575
43125/43312	31,750
43131/43312	33,338
43132/43312	33,338
436/432	46,038
4375/4335	38,100
438/432	44,450
438/432A	44,450
4388/4335	41,275
4395/4335	42,070
440/432	38,100
44131/44348	33,338
44143/44348	36,512
44150/44348	38,100
44158/44348	39,688
44162/44348	41,275
449/432	34,925
45280/45220	44,450
45282/45220	47,625
45284/45220	50,800
45285A/45220	50,800
45287/45220	53,975
45289/45220	57,150
45290/45220	57,150
45291/45220	57,150
45291/45221	57,150
45485/45220	50,800
455/453X	50,800

Bearing No.	d
455S/453X	50,800
456/453X	53,975
4580/4535	50,800
4595/4535	53,975
460/453X	44,450
46162/46368	41,275
46175/46368	44,450
46176/46368	44,450
462/453X	57,150
463/453X	47,625
466/453X	54,988
467/453X	47,625
46780/46720	158,750
46790/46720	165,100
46792/46720	166,687
468/453X	52,388
469/453A	57,150
469/453X	57,150
469/454	57,150
47487/47420	69,850
47487/47420A	69,850
47490/47420	71,438
475/472	55,000
476/472	60,000
47678/47620	76,200
47679/47620	76,200
47680/47620	76,200
47681/47620	80,962
47686/47620	82,550
47686/47620A	82,550
47687/47620	82,550
477/472	63,500
47890/47820	92,075
47896/47820	95,250
480/472	68,262
48190/48120	107,950
482/472	69,850
482/472A	69,850
48286/48220	123,825
48290/48220	127,000
483/472	63,500
48385/48320	133,350
48393/48320	136,525
484/472	70,000
48506/48750	128,588
48684/48620	142,875
48685/48620	142,875
49175/49368	44,450
495/492A	82,550
495/493	82,550
49576/49520	44,450
49585/49520	50,800
495A/492A	76,200
495A/493A	76,200
495AS/493	77,788
495AX/493	76,200
495S/493	71,438
496/493	80,962
497/492A	85,725
497/493	85,725
497A/492A	85,725
497A/493	85,725
498/493	84,138
52375/52618	95,250
52387/52618	98,425
52393/52618	100,012
52400/52618	101,600
52400/52637	101,600
52400/52638	101,600
52401/52618	101,600
525/522	38,100
527/522	44,450
528/522	47,625

Bearing No.	d
529/522	50,800
529X/522	50,800
53150/53375	38,100
53162/53375	41,275
53176/53375	44,450
53176/53377	44,450
53176/53387	44,450
53177/53375	44,450
53178/53375	44,450
535/532A	44,450
535/532X	44,450
5356/5335	44,450
537/532A	50,800
537/532X	50,800
539/532A	53,975
539/532X	53,975
5395/5335	49,212
539A/532X	53,975
543/532X	40,000
543085/543114	215,900
544090/544118	228,600
544091/544118	231,775
545112/545141	285,750
55175C/55437	44,450
55176C/55437	44,450
55187C/55437	47,625
55187C/55443	47,625
55200C/55437	50,800
55200C/55443	50,800
55206C/55437	52,388
55212C/55434	53,975
555/552A	50,800
555S/552A	57,150
5578/5535	53,975
557S/552A	53,975
558/552A	60,325
5583/5535	60,325
5584/5535	63,500
559/552A	63,500
5595/5535	65,883
560/552A	66,675
560S/552A	68,262
56418/56650	106,362
56425/56650	107,950
56425/56662	107,950
56426/56650	107,950
565/563	63,500
566/563	69,850
567/563	73,025
567A/563	71,438
567X/563	73,025
568/563	73,817
570/563	68,262
575/572	76,200
575/572X	76,200
575S/572	76,200
576/572	73,025
5760/5735	76,200
577/572	74,612
580/572	82,550
580/572X	82,550
581/572	80,962
582/572	82,550
590A/592A	76,200
59175/59412	44,450
59200/59412	50,800
59201/59412	50,800
593/592A	88,900
593A/592A	88,900
594/592A	95,250
594/593X	95,250
594A/592A	95,250
594A/592XE	95,250



https://nppnovoteh.com

4. TAPERED ROLLER BEARINGS

4.3. Tapered roller bearings – inch dimensions, auxiliary table for data retrieval according to index

Bearing No.	d
594A/592XS	95,250
595/592A	82,550
596/592A	85,725
598/592A	92,075
598A/592A	92,075
619/612	50,800
621/612	53,975
623/612	57,150
6277/6220	44,450
6280/6220	53,975
636/632	53,975
6379/6320	65,088
6381/6320	54,988
6382/6320	63,500
6386/6320	66,675
6389/6320	66,675
639/632	63,500
641/632	66,675
641/633	66,675
643/632	69,850
644/632	71,438
64432/64700	109,974
64433/64700	109,992
64450/64700	114,300
64450/64708	114,300
64452A/64700	114,975
6460/6420	73,025
6461/6420	76,200
6461A/6420	76,200
65200/65500	50,800
65212/65500	53,975
65225/65500	57,150
65237/65500	60,325
65237A/65500	60,325
65390/65320	49,212
65395/65320	50,800
655/653	69,850
6559C/6535	82,550
657/653	73,025
6575/6535	76,200
6576/6535	76,200
6576C/6520	76,200
6580/6535	88,900
659/653	76,200
661/653	79,375
66200/66462	50,800
66212/66462	53,975
66225/66462	57,150
663/652	82,550
663/653	82,550
665/653	85,725
66584/66520	53,975
66589/66520	59,972
665A/653	85,725
67388/67322	127,000
67389/67322	130,175
67390/67322	133,350
67391/67322	133,350
67425/67675	107,950
677/672	85,725
67780/67720	165,100
67782/67720	168,275
67786/67720	174,625
67787/67720	174,625
67790/67720	177,800
67791/67720	177,800
67883/67820	184,150
67884/67820	187,325
67885/67820	190,500
679/672	88,900
67983/67920	203,200
67985/67920	206,375
67989/67920	209,550

Bearing No.	d
680235/680270	596,900
681/672	92,075
681A/672	92,075
683/672	95,250
683XA/672	95,250
68450/68712	114,300
68462/68709	117,475
68462/68712	117,475
68463/68712	117,475
685/672	98,425
687/672	101,600
71412/71750	104,775
71425/71750	107,950
71450/71750	114,300
71453/71750	115,087
71455/71750	115,087
72188C/72487	47,625
72200C/72487	50,800
72201C/72487	50,800
72212C/72487	53,975
72218C/72487	55,562
72225C/72487	57,150
73551/73875	139,700
73562/73875	142,875
740/742	80,962
744/742	73,025
74500/74850	127,000
74525/74850	133,350
74537/74850	136,525
74550/74845	139,700
74550/74850	139,700
74550A/74850	139,700
745A/742	69,850
748S/742	76,200
749/742	85,026
749A/742	82,550
749S/742	85,026
750A/742	82,550
755/752	76,200
756A/752	79,375
757/752	82,550
758/752	85,725
759/752	88,900
760/752	90,488
762/752	73,025
766/752	88,900
77362/77675	92,075
77375/77675	95,250
778/772	92,075
780/772	101,600
782/772	104,775
78214C/78551	53,975
78215C/78551	53,975
78225/78551	57,150
78225C/78551	57,150
78250/78537	63,500
78250/78551	63,500
78255X/78551	64,988
78255X/78571	64,988
786/772	104,775
787/772	104,775
795/792	120,650
797/792	130,000
799/792	128,588
799A/792	130,175
80170/80217	431,800
80176/80217	447,675
80180/80217	457,200
80385/80325	431,800
80480/80425	482,600
80780/80720	635,000
82576/82931	146,050
82576/82950	146,050

Bearing No.	d
82680X/83620	177,800
835/832	69,850
841/832	85,725
84115/84155	292,100
842/832	82,550
843/832	76,200
850/832	88,900
855/854	88,900
857/854	92,075
8573/8520	228,600
8575/8520	234,950
8578/8520	241,300
861/854	101,600
864/854	95,250
86650/86100	165,100
86669/86100	170,000
87737/87111	187,325
87750/87111	190,500
87762/87111	193,675
88900/88126	228,600
88900/88128	228,600
88925/88126	234,950
88925/88128	234,950
896/892	136,525
898/892	139,700
898A/892	139,700
90334/90744	85,000
90381/90744	96,838
9185/9121	68,262
9278/9220	68,262
9285/9220	76,200
936/932	107,950
93708/93125	179,975
93750/93125	190,500
9378/9321	76,200
93787/93125	200,025
938/932	114,300
9380/9321	76,200
93800/93125	203,200
93825/93125	209,550
9385/9321	84,138
9386H/9320	84,138
941/932	101,600
94649/94113	165,100
94687/94113	174,625
94700/94113	177,800
95475/95925	120,650
95500/95905	127,000
95500/95925	127,000
95525/95925	133,350
95528/95925	133,350
96900/96140	228,600
96925/96140	234,950
97500/97900	127,000
98316/98788	80,000
98335/98788	85,000
98350/98788	88,900
98400/98788	101,600
99550/99100	139,700
99575/99100	146,050
99600/99100	152,400
H212749/10	65,987
H238140/10	165,100
H238148/10	174,625
H239640/10	177,800
H239649/10	187,325
H239649/12	187,325
H242649/10	206,375
H247535/10	200,025
H247549/10	234,950
H414235/10	63,500
H414242/10	66,675
H414245/10	68,262

Bearing No.	d
H414245X/10	68,262
H414249/10	71,438
H715332/11	60,325
H715334/11	61,912
H715340/11	65,088
H715341/11	66,675
H715341A/11	66,675
H715343/10	68,262
H715343/11	68,262
H715345/10	71,438
H715345/11	71,438
H715347/11	69,987
H715348/11	77,788
H816249/10	77,788
H852849/10	266,700
H859049/10	314,325
H913840/10	59,987
H913842/10	61,912
H913843/10	61,912
H913849/10	69,850
H916642/10	69,987
H917840/10	76,200
H917849/10	82,550
H924045/10	111,125
H936340/10	155,575
H936340/16	155,575
H936349/10	168,275
H961649/10	317,500
H969249/10	406,400
HH144642/14	200,025
HH221430/10	76,200
HH221431/10	79,375
HH221434/10	88,900
HH221440/10	95,250
HH221442/10	98,425
HH221447/10	99,982
HH221449/10	101,600
HH221449A/10	101,600
HH224334/10	99,975
HH224335/10	101,600
HH224340/10	107,950
HH224346/10	114,300
HH224349/10	114,975
HH228340/10	120,650
HH228349/10	127,000
HH231637/15	127,000
HH231649/10	139,700
HH231649/15	139,700
HH234031/10	139,700
HH234048/10	152,400
HH249949/10	247,650
HH258248/10	299,974
HH421246C/10	98,425
HH437549/10	165,100
HH506348/10	49,212
HH506349/10	49,987
HH814542/10	60,325
HH840249/10	190,500
HH914447/12	63,500
HH914449/12	66,675
HH923649/10	101,600
HH923649/11	101,600
HH926744/10	114,300
HH926744/16	114,300
HH926749/10	120,650
HH932132/10	127,000
HH932145/10	146,050
HH932145/15	146,050
HH949549/10	228,600
HH953749/10	254,000
HM125948/10	123,825
HM204049/10	45,987
HM212044/11	60,325

https://nppnovoteh.com

Bearing No.	d
HM212046/11	63,500
HM212047/11	63,500
HM212049/10	66,675
HM212049/11	66,675
HM212049X/11	66,675
HM215249/10	75,987
HM218238/10	79,974
HM218248/10	89,974
HM220149/10	99,974
HM227545/19	129,967
HM231140/10	146,050
HM231148/10	149,225
HM231149/10	149,225
HM237532/10	160,325
HM237535/10	165,100
HM237542/10	174,625
HM237545/10	177,800
HM237545/13	177,800
HM252343/10	254,000
HM252344/10	254,000
HM252348/10	260,350
HM252349/10	260,350
HM256849/10	300,038
HM259048/10	317,500
HM259049/10	317,500
HM261049/10	333,375
HM262748/10	346,075
HM262749/10	346,075
HM265049/10	368,249
HM266446/10	381,000
HM266447/10	381,000
HM266448/10	384,175
HM266449/10	384,175
HM321245/10	99,212
HM516442/10	76,200
HM516448/10	82,550
HM516449/10	82,550
HM535349/10	171,450
HM542948/11	203,200
HM617049/10	85,725
HM624749/10	120,650
HM746645/10	228,600
HM746646/10	228,600
HM801346/10	38,100
HM801346X/10	38,100
HM801349/10	40,483
HM803145/10	41,275
HM803146/10	41,275
HM803146/11	41,275
HM803149/10	44,450
HM804840/10	41,275
HM804842/10	44,450
HM804843/10	44,450
HM804846/10	47,625
HM804848/10	48,412
HM804848/11	48,412
HM804848A/10	48,412
HM804849/10	48,412
HM807035/10	41,275
HM807035/11	41,275
HM807040/10	44,450
HM807044/10	49,212
HM807046/10	50,800
HM807048/10	54,488
HM807049/10	53,975
HM807049A/10	53,975
HM813839/10	59,987
HM813840/10	55,562
HM813841/10	60,325
HM813841A/10	60,325
HM813842/10	63,500
HM813842A/10	63,500
HM813844/10	66,675

Bearing No.	d
HM813844/11	66,675
HM813849/10	71,438
HM81649/10	15,875
HM88542/10	31,750
HM88542/11	31,750
HM88542/12	31,750
HM88547/10	33,338
HM88630/10	25,400
HM88648/10	35,717
HM88648/11AS	35,717
HM88649/10	34,925
HM88649A/13	34,925
HM89249/10	36,512
HM89440/10	31,750
HM89443/10	33,338
HM89444/10	33,338
HM89446/10	34,925
HM89448/10	36,512
HM89449/10	36,512
HM89449/11	36,512
HM903244/10	41,275
HM903245/10	41,275
HM903247/10	44,450
HM903248/10	44,988
HM903249/10	44,450
HM903249A/10	44,450
HM905843/10	44,988
HM907643/14	50,800
HM911242/10	53,975
HM911244/11	59,987
HM911245/10	60,325
HM911245/16	60,325
HM911249/10	61,912
HM914545/10	69,850
HM926740/10	114,300
HM926747/10	127,000
HM926749/10	127,792
J15585/20	28,000
J16154/85	39,000
J6392/27	65,000
J90354/48	90,000
JD6549/10	65,000
JF4049/10	40,000
JF6049/10	60,000
JF7049/10	70,000
JF7049A/10	70,000
JF9549/10	95,000
JH211749/10	65,000
JH211749A/10	65,000
JH217249/10	85,000
JH307749/10	55,000
JH415647/10	75,000
JH429149/10	130,000
JH913848/11	70,000
JHH221436/13	90,000
JHH224333/15	100,000
JHM133449/17	160,000
JHM318448/10	90,000
JHM33449/10	24,000
JHM516849/10	85,000
JHM522649/10	110,000
JHM534149/10	170,000
JHM720249/10	100,000
JHM807045/12	50,000
JHM840449/10	200,000
JHM88540/13	30,000
JL69345/10	38,000
JL69349/10	38,000
JL69349A/10	38,000
JL724348/14	120,000
JL725346/16	125,000
JL730646/12	150,000
JL819349/10	95,000

Bearing No.	d
JLM104948/10	50,000
JLM506849/10	55,000
JLM508748/10	60,000
JLM704649/10	50,000
JLM710949/10	65,000
JLM710949C/10	65,000
JLM714149/10	75,000
JLM722948/12	115,000
JLM813049/10	70,000
JLM820048/12	100,000
JM205149/10	50,000
JM205149A/10	50,000
JM207049/10	55,000
JM207049A/10	55,000
JM511946/10	65,000
JM515649/10	80,000
JM612949/10	70,000
JM624649/10	120,000
JM714249/10	75,000
JM714249A/10	75,000
JM716648/10	85,000
JM716649/10	85,000
JM718149/10	90,000
JM718149A/10	90,000
JM719149/13	95,000
JM720249/10	100,000
JM734445/10	160,000
JM734449/10	170,000
JM736149/10	180,000
JM738249/10	190,000
JM738249A/10	190,000
JM822049/10	110,000
JP10044/10	95,000
JP10049/10	100,000
JP10049A/10	100,000
JP12049/10	120,000
JP12049A/10	120,000
JP13049/10	130,000
JP13049A/10	130,000
JP14049/10	140,000
JP16049/10	160,000
JP17049/10	170,000
JP18049/10	180,000
JP6049/10	60,000
JP7049/10	70,000
JP8049/10	80,000
JS3549A/10	35,000
JW4549/10	45,000
JW5049/10	50,000
JW5549/10	55,000
JW6049/10	60,000
JW6549/10	65,000
JW7049/10	70,000
JW7549/10	75,000
JW8049/10	80,000
L102849/10	44,450
L116149/10	82,550
L163149/10	355,600
L183448/10	759,925
L183449/10	762,000
L21549/11	15,875
L217849/10	88,900
L225842/10	120,650
L225849/10	127,000
L225849/18	127,000
L281148/10	660,400
L305649/10	50,800
L319249/10	95,250
L327249/10	133,350
L357049/10	304,800
L420449/10	101,600
L432349/10	158,750
L433749/10	165,100

Bearing No.	d
L435049/10	171,450
L44640/10	23,812
L44642/10	25,400
L44643/10	25,400
L44649/10	26,988
L45449/10	29,000
L467549/10	406,400
L476549/10	549,275
L507949/10	57,150
L521945/10	101,600
L521949/10	107,950
L521949/14	107,950
L540049/10	196,850
L55249/10	292,100
L555233/10	279,400
L570649/10	457,200
L580049/10	609,600
L610549/10	63,500
L623149/10	114,300
L624549/10	120,650
L630349/10	152,400
L68149/11	34,988
L713049/10	69,850
L730649/10	152,400
L812147/11	66,675
L812148/11	66,675
L814749/10	76,200
L826949/14	133,350
L853049/10	276,225
L860048/10	330,200
L860049/10	330,200
L865547/12	381,000
L879946/10	609,396
L879947/10	609,600
L910349/10	63,487
LL103049/10	44,450
LL205449/10	50,800
LL217849/10	88,900
LL225749/10	127,000
LL244549/10	231,775
LL264648/10	374,650
LL319349/10	95,250
LL327049/10	133,350
LL352149/10	279,400
LL365348/10	384,175
LL382149/10	698,500
LL420549/10	101,600
LL428349/10	139,700
LL481448/11	673,100
LL483449/18	759,925
LL483449/18	762,000
LL510749/10	63,500
LL52549/10	22,225
LL529749/10	146,050
LL537649/10	184,150
LL562749/10	361,950
LL566848/10	403,225
LL575343/10	533,400
LL575349/10	539,750
LL584449/10	801,688
LL639249/10	196,850
LL641149/10	203,200
LL648449/15	254,000
LL687949/10	977,900
LL713149/10	69,850
LL714649/10	76,200
LL735449/10	177,800
LL758744/15	323,850
LL762649/10	361,950
LL771948/11	476,250
LL777148/10	571,500
LL778149/10	584,200
LL788345/10	1063,625



https://nppnovoteh.com

4. TAPERED ROLLER BEARINGS

4.3. Tapered roller bearings – inch dimensions, auxiliary table for data retrieval according to index

Bearing No.	d
LL788349/10	1066,800
LL789749/10	1689,100
LL889049/10	1270,000
LL957049/10	312,738
LM102949/10	45,242
LM104947A/11	49,987
LM104949/11	50,800
LM104949/12	50,800
LM11749/10	17,462
LM11949/10	19,050
LM12749/10	21,986
LM12749/11	21,986
LM229139/10	136,525
LM229146/10	142,875
LM236749/10A	184,150
LM241149/10	203,200
LM245848/10	231,775
LM272235/10	457,200
LM272249/10	482,600
LM283649/10	749,300
LM29748/10	38,100
LM29749/10	38,100
LM29749/11	38,100
LM300849/11	40,988
LM328448/10	139,700
LM330448/10	152,400
LM361649/10	342,900
LM377449/10	558,800
LM446349/10	234,950
LM451345/10	263,525
LM451349/10	266,700
LM451349A/10	266,700
LM451349AX/10	266,700
LM48545/10	35,128
LM48548/10	34,925
LM48548A/10	34,925
LM501349/10	41,275
LM501349/14	41,275
LM503349/10	45,987
LM503349A/10	45,987
LM522546/10	107,950
LM522548/10	109,987
LM522549/10	109,987
LM545849/10	234,950
LM565943/10	374,650
LM565949/10	381,000
LM565949/12	381,000
LM567949/10	406,400
LM603049/11	45,242
LM603049/12	45,242
LM603049/14	45,242
LM613449/10	69,850
LM654642/10	279,982
LM654649/10	285,750
LM665949/10	385,762
LM67048/10	31,750
LM718947/10	91,973
LM720648/10	101,600
LM72849/10	22,606
LM739749/10	196,850
LM739749/19	196,850
LM742745/10	212,725
LM742747/10	216,408
LM742749/10	215,900
LM757049/10	304,800
LM770949/10	457,200
LM772748/10	488,950
LM78349/10A	34,988
LM78349/10C	34,988
LM78349A/10A	34,988
LM78349A/10C	34,988
LM805549/10	53,975
LM814849/10	77,788

Bearing No.	d
LM844049/10	223,838
LM869448/10	431,800
LM921845/10	101,600
LM961548/11	342,900
M12648/10	22,225
M12649/10	21,430
M224749/10	120,650
M224749/11	120,650
M231648/10	152,400
M231649/10	152,400
M235145/13	165,100
M236845/10	174,625
M236848/10	177,800
M236849/10	177,800
M238840/10	177,800
M238849/10	187,325
M241543/10	200,025
M241547/10	203,200
M241549/10	204,788
M244249/10	220,663
M246942/10	231,775
M246949/10	237,330
M249732/10	228,600
M249734/10	231,775
M249736/10	237,330
M249749/10	254,000
M252330/10	234,950
M252337/10	247,650
M252349/10	269,875
M255449/10	288,925
M268730/10	381,000
M268749/10	415,925
M270749/10	447,675
M272749/10	479,425
M274149/10	501,650
M276449/10	536,575
M278749/10	571,500
M348449/10	247,650
M349549/10	257,175
M349549A/10	257,175
M38549/10	34,925
M533349S/10	165,100
M667935/11	387,248
M667948/11	409,575
M802048/11	41,275
M804048/10	47,625
M804049/10	47,625
M84249/10	25,400
M84548/10	25,400
M86643/10	25,400
M86647/10	28,575
M86648A/10	30,955
M86649/10	30,162
M88036/11	25,400
M88043/10	30,162
M88046/10	31,750
M88048/10	33,338
M903345/10	41,275
M959442/10	304,800

https://nppnovoteh.com



https://nppnovoteh.com

5. CYLINDRICAL ROLLER BEARINGS



https://nppnovoteh.com

TABLES:

5.	CYLINDRICAL ROLLER BEARINGS
5.1	Single-row cylindrical roller bearings – types – NU, NUB, NUC
5.2	Single-row cylindrical roller bearings – types – NJ, NJP
5.3	Single-row cylindrical roller bearings – types – NH, NUJ
5.4	Angular rings for cylindrical roller bearings – HJ
5.5	Single-row cylindrical roller bearings – type – NUP
5.6	Single-row cylindrical roller bearings – types – N, NF, NP
5.7	Multi-row cylindrical roller bearings – types – NN, NN..K
5.8	Multi-row cylindrical roller bearings – types – NNU, NNU..K
5.9	Cageless cylindrical roller bearings – types – NCF, NJF, NNC, NNCF, NNCL, NNF

INTRODUCTION:

5. Cylindrical roller bearings

5.1. Single-row cylindrical roller bearings

5.1.1. Dimension series

- **N** – open-end outer ring
- **NF** – one-sided open-end outer ring
- **NP** – closed-end outer ring and retaining ring **P**
- **NU** – open-end inner ring
- **NUB** – extended open-end inner ring
- **NUC** – open-end inner ring (as NU, but different make of the inner ring)
- **NUJ** – NU bearing and **HJ** angular ring
- **NJ** – one-sided open-end inner ring
- **NH** – NJ bearing and **HJ** angular ring
- **NJP** – NJ bearing with a separate lip in the form of the **P** retaining ring
- **NUP** –- one-sided open-end inner ring and additionally the **P** retaining ring

The dimension series listed below are characteristic for various solutions described above:

- **18.. 38.. 48.. 19.. 29.. 39.. 49.. 69.. 10.. 20.. 30.. 40.. 50.. 31.. 51.. 2.. 12.. 22.. 32.. 52.. 3.. 23.. 33.. 4..**

Cylindrical roller bearings are dismountable and after removing the free ring we always get the following types of bearings:

- **RNU** – without the inner ring or
- **RN** – without the outer ring.

5.1.2. Structure

Because of the wide variety of construction types it is very difficult to describe in detail the structure of cylindrical roller bearings.

On the whole, though, cylindrical roller bearings consist of the cage with rollers, which is fixed to one of the rings (to the inner ring in the N, NP and NF makes and to the outer ring in the NU, NJ, NUP and NH makes), and the second, free ring of diversified structure. And precisely this diversified structure of the free ring contributed to such great number of construction types. Individual construction types have been listed above in the form of dimension series. The key feature of all cylindrical roller bearings is their dismountability, of course, besides bearings that lack free rings.



Fig.16 Single-row cylindrical roller bearing with an open-end outer ring

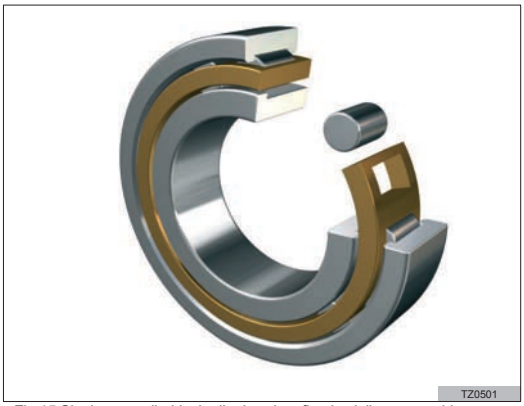

Fig.15 Single-row cylindrical roller bearing, fixed axially on one side

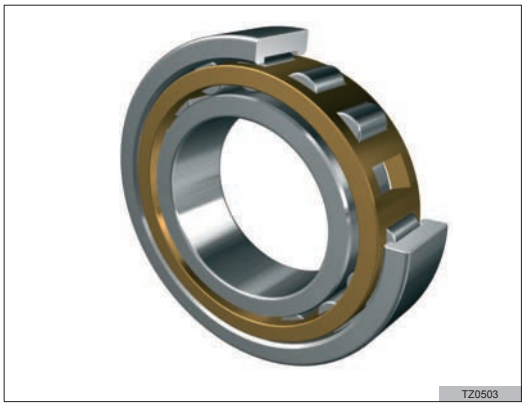

Fig.17 Single-row cylindrical roller bearing, with an open-end inner ring

https://nppnovoteh.com

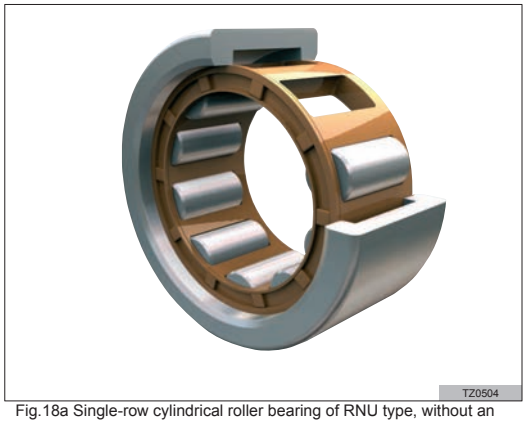

Fig.18a Single-row cylindrical roller bearing of RNU type, without an inner ring

5.1.3. Features

Cylindrical roller bearings feature a very high load capacity and rigidity when compared to other bearings with similar dimensions. The variants without cage (with full complement of rolling elements) are characterized by even higher rigidity and load capacity, though, their limiting rotational speed is considerably lower. Single-row cylindrical roller bearings are by and large intended for accommodating radial loads, but bearings of NJ (NF) type allow to fix the shaft axially in one direction, and NUP (NP) bearings as well as NJ bearings together with the HJ angular ring (marked as NH) allow to fix the shaft in two directions. These bearings are able to support some axial load, especially periodical loads or load in form of shock pulses, however to a limited extent.



Fig.18b Single-row cylindrical roller bearing fixed axially on both sides, NUP-type

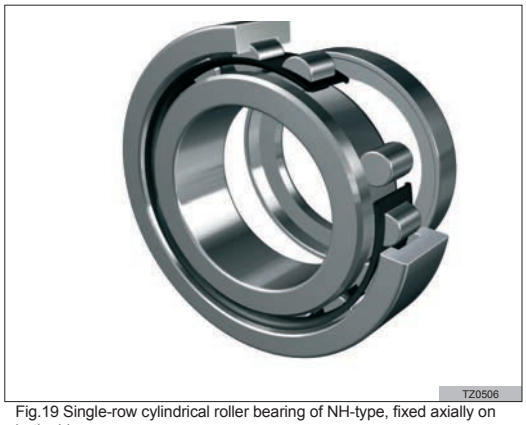

Fig.19 Single-row cylindrical roller bearing of NH-type, fixed axially on both sides

5.1.4. Cages

Cages of single-row cylindrical roller bearings are usually made of steel or brass.
One can also encounter designs with cages made of thermoplastic material – polyamide strengthened with glass fiber.

5.1.5. Misalignment

Single-row cylindrical roller bearings are rated among extremely sensitive to errors of alignment, which cause end stresses. The longevity of cylindrical roller bearings is very short under such conditions.

5.1.6. Clearance

The clearance of cylindrical roller bearings is always reached through the processing of the free ring.
The "**NA**" designation behind the cylindrical roller bearing symbol gives information that free rings: the outer or the inner one (depending on the type) have been individually matched with rollers and are not replaceable.

5.1.7. "E" – Bearings in the strengthened design

In no other case the E-design is more important than in that of cylindrical roller bearings. Similar to other types of bearings the E-letter means also in case of cylindrical roller bearings that the internal construction of the bearing has been changed, through the change of the number and size of the rolling elements, of the cage structure and the like. Strengthened-design bearings feature considerably better parameters both with regard to their load capacity and to their rotational speed. From the point of view of designers it is possible to substitute standard-make bearings for strengthened variants. One can await an improvement in the quality and longevity of the bearing-closed pair. The problem arises when we take a bearing that lacks a free ring – the bearing of RNU and RN type. The main dimensions of the strengthened version are kept unchanged of course, whereas some of additional dimensions are slightly modified. One of such dimensions is the diameter of the F_w circle, which is inscribed about the cage with rollers (in case of RNU bearings) or circumscribed about the cage with rollers (in case of RN bearings). So it is logically that in case of using bearings without free rings the former, "additional", dimension becomes the main dimension. One shall pay special attention to this fact when replacing bearings that lack free rings (mounted directly on the shaft or in the housings).

5.1.8. Application of cylindrical roller bearings

Because the cylindrical roller bearings are intended for accommodating substantial radial load, they should be applied wherever such loads prevail. Besides the fact that they are able to carry considerable radial loads, they guarantee substantial bearing mounting rigidity, too, compared with other types of bearings. Actually it is nearly impossible to point out the field in which cylindrical roller bearings are not applied.
Because of their high sensitivity to errors of alignment, cylindrical roller bearings are often used together with other types of bearings (e.g. in tool machines' spindles).

https://nppnovoteh.com

5.2. Multi-row cylindrical roller bearings

5.2.1. Dimension series

- **NN 30.. NN31.. NN48.. NN49.. NN40..**
- **NN 30..K NN31..K NN48..K NN49..K NN40..K**
- **NNU 49.. NNU60.. NNU41..**
- **NNU 49..K NNU60..K NNU41..K**

5.2.2. Main features

Multi-row cylindrical roller bearings are characterized by substantial load capacity (the more rows of rollers the higher the load capacity) but also by rigidity when mounted on the shaft. There are also versions without a free ring **(RNNU.. and RNN..)**. Most often they are produced in higher accuracy classes. Cylindrical roller bearings with full number of rolling elements (without cage) feature exceptionally high load carrying capacity and rigidity.

5.2.3. Misalignments

Multi-row cylindrical roller bearings are rated among extremely sensitive to errors of alignment and angular displacement, which cause end stresses. The longevity of cylindrical roller bearings is very short under such conditions.

5.2.4. Cages

Most often solid brass cages are used but steel and polyamide cages are also available.
It is often the case that bearings are manufactured without cage – with full number of rolling elements.
The data in the table below regard production of the most common makes. Individual types may often differ with small details, which may have no relevance from the point of view of the housing of the bearing. The differences encountered most often result from the ways of axial placement of rings. As seen in the table, dimension series represent different types of lips, sometimes additional expanding rings, etc.

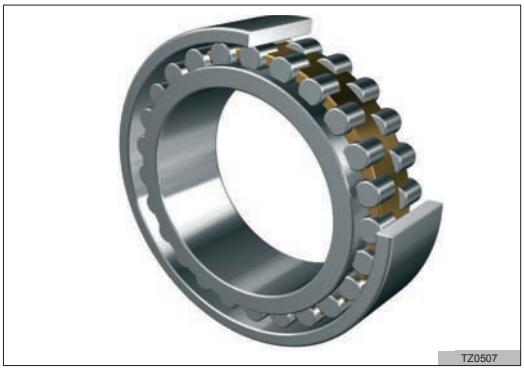

Fig.20 Double-row cylindrical roller bearing with an open-end outer ring



Fig.21 Double-row cylindrical roller bearing with an open-end inner ring

5.3. Cylindrical roller bearings with full complement of rolling elements

5.3.1. Dimension series

CX	Number or rows	Lips on the inner ring	Lips on the outer ring	Notes
NCF..	**1**	two fixed lips	one fixed lip	snap ring on the inside of the outer ring without a fixed lip
NJF..	**1**	one fixed lip	two fixed lips	inner ring the same as used in the NJ bearings
NNCF..	**2**	two fixed lips	one fixed lip	snap ring on the inside of the outer ring without a fixed lip
NNC..	**2**	two fixed lips	one fixed lip	side ring adjacent to the outer ring from the side without the fixed lip
	2	two fixed lips	two fixed lips	
NNCL..	**2**	two fixed lips	none	
NNF..	**2**	four fixed lips	one inner lip between the rows of rollers	snap grooves on the outer ring, two-piece inner ring

https://nppnovoteh.com

5.3.2. Characterization

Cylindrical roller bearings with full number of rolling elements are equipped with as many rollers as possible and are characterized by a small cross-section height in relation to the bearing's width. It allows to achieve a very high load carrying capacity, and extremely compact constructions. These bearings are absolutely suitable for applications where very heavy radial loads occur, however because of changed kinematic conditions they are not able to operate with so high rotational speed as cylindrical roller bearings with cage.

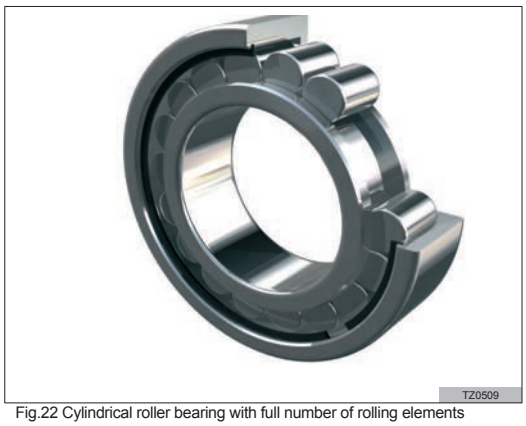

Fig.22 Cylindrical roller bearing with full number of rolling elements

5.3.3. Construction variants

Because of the continually increasing interest into this type of bearings along with ever higher requirements as of operating parameters, cylindrical roller bearings with full number of rolling elements are made in a great number of construction variants. The Table 5.9. shows designations of individual series produced by several manufacturers. Additionally some drawings and pictorial diagrams have been attached.

5.3.4. Special processing of rolling elements

Kinematic conditions of cylindrical roller bearings with full number of rolling elements are adverse in relation to conditions of cylindrical roller bearings with cage, because pitch-surface generators (generating lines) of the adjacent rollers are in contact with each other and slide in different directions to each other. Because of this, surfaces of rolling elements are subjected to special treatment, which aims at minimizing the adverse occurrences. The processing consists in modifying the surface profile of rollers contact surfaces.

5.3.5. Axial load carrying capacity

Cylindrical roller bearings with full number of rollers having lips on the inner and outer ring can accommodate axial loads in addition to radial load. However in that case axial load carrying capacity does not depend on material durability but on the strength and operating parameters of the friction pair: roller/lip.

5.3.6. Misalignment

The ability of the cylindrical roller bearing without cage to compensate misalignments of the inner ring in relation to the outer ring is limited in the same way as in case of cylindrical roller bearings with cage, and comprises in just a few minutes (of arc).

5.3.7. Heat treatment

Cylindrical roller bearings with full number of rolling elements can be operated in the working temperature of up to 150°C, and bearings of over 120 mm in internal diameter keep their dimension up to 200°C.

5.3.8. Application

Cylindrical roller bearings with full number of rolling elements without seal are mainly used for manufacturing gears, while double-row sealed cylindrical roller bearings are most often applied in crane constructions.

https://nppnovoteh.com

https://nppnovoteh.com

5. CYLINDRICAL ROLLER BEARINGS

5.1. Single-row cylindrical roller bearings - types – NU, NUB, NUC



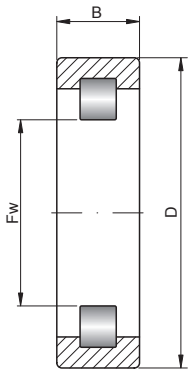

RNU..

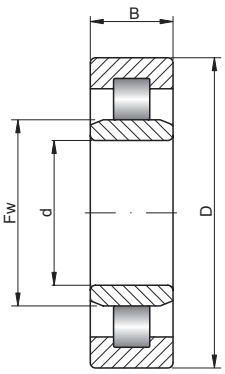

NU..

15 – 45 mm

Shaft [mm]	Bearing No.	Inner ring IR	Series		Dimensions [mm]				Weight [kg]
			SD	SB	d	D	B	Fw	
15	**NU202 E**	IR15X19,3X11	2	0	15	35	11	19,3	0,048
	NU302 E	IR15X21X13	3	0	15	42	13	21	0,088
17	**NU203 E**	IR17X22,1X12	2	0	17	40	12	22,1	0,069
	NU2203 E	IR17X22,1X16	2	2	17	40	16	22,1	0,092
	NU303 E	IR17X24,2X14	3	0	17	47	14	24,2	0,12
20	**NU204 E**	IR20X26,5X14	2	0	20	47	14	26,5	0,112
	NU2204 E	IR20X26,5X18	2	2	20	47	18	26,5	0,146
	NU304 E	IR20X27,5X15	3	0	20	52	15	27,5	0,153
	NU2304 E	IR20X27,5X21	3	2	20	52	21	27,5	0,215
25	**NU1005**	IR25X30,5X12	0	0	25	47	12	30,5	0,084
	NU205 E	IR25X31,5X15	2	0	25	52	15	31,5	0,138
	NU2205 E	IR25X31,5X18	2	2	25	52	18	31,5	0,166
	NU305 E	IR25X34X17	3	0	25	62	17	34	0,243
	NU2305 E	IR25X34X24	3	2	25	62	24	34	0,35
30	**NU1006**	IR30X36,5X13	0	0	30	55	13	36,5	0,121
	NU206 E	IR30X37,5X16	2	0	30	62	16	37,5	0,209
	NU2206 E	IR30X37,5X20	2	2	30	62	20	37,5	0,262
	NU3206	IR30X38,5X23,8	2	3	30	62	23,8	38,5	0,343
	NU306 E	IR30X40,5X19	3	0	30	72	19	40,5	0,361
	NU2306 E	IR30X40,5X27	3	2	30	72	27	40,5	0,534
	NU3306	IR30X42X30,2	3	3	30	72	30,2	42	0,65
	NU406	IR30X45X23	4	0	30	90	23	45	0,753
35	**NU1007**	IR35X42X14	0	0	35	62	14	42	0,182
	NU207 E	IR35X44X17	2	0	35	72	17	44	0,306
	NU2207 E	IR35X44X23	2	2	35	72	23	44	0,404
	NU3207	IR35X43,8X27	2	3	35	72	27	43,8	0,524
	NU307 E	IR35X46,2X21	3	0	35	80	21	46,2	0,482
	NU2307 E	IR35X46,2X31	3	2	35	80	31	46,2	0,729
	NU3307	IR35X46,2X34,9	3	3	35	80	34,9	46,2	0,908
	NU407	IR35X53X25	4	0	35	100	25	53	1,02
40	**NU1008**	IR40X47X15	0	0	40	68	15	47	0,223
	NU208 E	IR40X49,5X18	2	0	40	80	18	49,5	0,384
	NU2208 E	IR40X49,5X23	2	2	40	80	23	49,5	0,49
	NU5208	IR40X49,3X30,16	2	5	40	80	30,16	49,3	0,738
	NU3208	IR40X50X30,2	2	3	40	80	30,2	50	0,711
	NU308 E	IR40X52X23	3	0	40	90	23	52	0,664
	NU2308 E	IR40X52X33	3	2	40	90	33	52	0,962
	NU3308	IR40X53,5X36,5	3	3	40	90	36,5	53,5	1,19
	NU408	IR40X58X27	4	0	40	110	27	58	1,3
45	**NU1009**	IR45X52,5X16	0	0	45	75	16	52,5	0,289
	NU2009	IR45X52,5X19	0	2	45	75	19	52,5	0,34
	NU209 E	IR45X54,5X19	2	0	45	85	19	54,5	0,439
	NU2209 E	IR45X54,5X23	2	2	45	85	23	54,5	0,536
	NU5209	IR45X55,5X30,16	2	5	45	85	30,16	55,5	0,797
	NU3209	IR45X55X30,2	2	3	45	85	30,2	55	0,77
	NU309 E	IR45X58,5X25	3	0	45	100	25	58,5	0,909
	NU2309 E	IR45X58,5X36	3	2	45	100	36	58,5	1,32
	NU3309	IR45X58,5X39,7	3	3	45	100	39,7	58,5	1,59
	NU409	IR45X64,5X29	4	0	45	120	29	64,5	1,64

- warehouse - order - phone

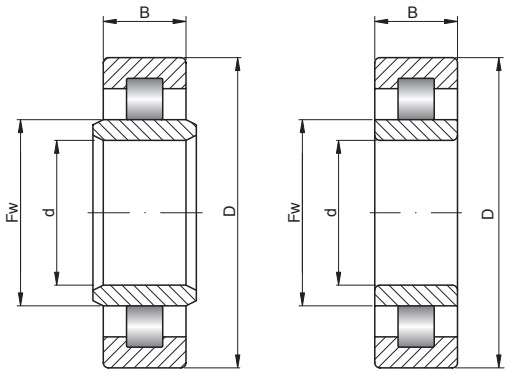

NUB.. NUC..

Basic load ratings [kN]		Limiting speed [rpm]		Basic makes*									Bearing No.
dyn. C	stat. C_0	grease	oil	-	M	TV	C2	C3	C4	K	NUB	NUC	
12,7	10,4	19000	22000	●	○	○	○	◴	◴	○	○	○	**NU202 E**
19,4	15,3	16000	19000	●	○	○	○	◴	◴	○	○	○	**NU302 E**
17,6	14,6	17000	20000	●	○	○	○	◴	◴	○	○	○	**NU203 E**
24	22	16000	18500	●	○	○	○	◴	◴	○	○	○	**NU2203 E**
25,5	21,2	14000	17000	●	○	○	○	◴	◴	○	○	○	**NU303 E**
25,7	22,6	15000	18000	●	○	○	○	◴	◴	○	○	○	**NU204 E**
30,6	28,3	13000	18000	●	○	○	○	◴	◴	○	○	○	**NU2204 E**
31,5	26,9	12000	16000	●	○	○	○	◴	◴	○	○	○	**NU304 E**
42	38,8	11000	16000	●	○	○	○	◴	◴	○	○	○	**NU2304 E**
14,3	13,1	15000	18000	◴	○	○	○	◴	○	○	○	○	**NU1005**
29,3	27,7	13000	15000	●	○	○	○	◴	◴	○	○	○	**NU205 E**
34,9	34,6	12000	15000	●	○	○	○	◴	◴	○	○	○	**NU2205 E**
41,6	37,4	10000	14000	●	○	○	○	◴	◴	○	○	○	**NU305 E**
57	56,1	9100	14000	●	○	○	○	◴	◴	○	○	○	**NU2305 E**
18,7	18,4	13000	15000	◴	○	○	○	◴	○	○	○	○	**NU1006**
39,1	37,4	11000	13000	●	○	○	○	◴	◴	○	○	○	**NU206 E**
48,9	49,8	9700	13000	●	○	○	○	◴	◴	○	○	○	**NU2206 E**
42,7	46,4	8700	13000	○	○	○	○	○	○	○	○	○	**NU3206**
53,1	50,2	8700	12000	●	○	○	○	◴	◴	○	○	○	**NU306 E**
74,6	77,6	7800	12000	●	○	○	○	◴	◴	○	○	○	**NU2306 E**
69,1	74,3	7700	12000	○	○	○	○	○	○	○	○	○	**NU3306**
62,8	55	7600	10000	●	◴	○	○	◴	◴	○	○	○	**NU406**
22,6	23,2	11000	13000	◴	○	○	○	◴	○	○	○	○	**NU1007**
50,2	50,2	9300	11000	●	○	○	○	◴	◴	○	○	○	**NU207 E**
61,6	65,3	8300	11000	●	○	○	○	◴	◴	○	○	○	**NU2207 E**
54,8	59,1	7600	11000	○	○	○	○	○	○	○	○	○	**NU3207**
66,6	65,4	7700	10000	●	○	○	○	◴	◴	○	○	○	**NU307 E**
93,1	101	6900	10000	●	○	○	○	◴	◴	○	○	○	**NU2307 E**
81,7	89,1	7000	10000	○	○	○	○	○	○	○	○	○	**NU3307**
75,2	68,9	6600	8800	●	◴	○	○	◴	◴	○	○	○	**NU407**
24,9	25,7	10000	12000	◴	○	○	○	◴	○	○	○	○	**NU1008**
55,7	55,4	8300	9900	●	○	○	○	◴	◴	○	○	○	**NU208 E**
72,3	77,6	7400	9900	●	○	○	○	◴	◴	○	○	○	**NU2208 E**
57	98,1	7500	8900	○	○	○	○	○	○	○	○	○	**NU5208**
78,3	90,6	6700	10000	○	○	○	○	○	○	○	○	○	**NU3208**
83,1	81,5	6800	9100	●	○	○	○	◴	◴	○	○	○	**NU308 E**
114	122	6100	9100	●	○	○	○	◴	◴	○	○	○	**NU2308 E**
104	119	6100	9100	○	○	○	○	○	○	○	○	○	**NU3308**
97,1	89,1	6000	8000	●	◴	○	○	◴	◴	○	○	○	**NU408**
31	33,8	9200	11000	◴	○	○	○	◴	○	○	○	○	**NU1009**
52,8	64	9000	11000	○	○	○	○	○	○	○	○	○	**NU2009**
63,1	66,4	7600	9200	●	○	○	○	◴	◴	○	○	○	**NU209 E**
76,1	84,6	6900	9200	●	○	○	○	◴	◴	○	○	○	**NU2209 E**
89,1	117,7	6700	7900	○	○	○	○	○	○	○	○	○	**NU5209**
82,4	99	6100	9200	○	○	○	○	○	○	○	○	○	**NU3209**
97,4	98,3	6100	8200	●	○	○	○	◴	◴	○	○	○	**NU309 E**
137	153	5400	8200	●	○	○	○	◴	◴	○	○	○	**NU2309 E**
131	149	5500	8300	○	○	○	○	○	○	○	○	○	**NU3309**
115	112	5400	7200	●	◴	○	○	◴	◴	○	○	○	**NU409**

* Other products also available

https://nppnovoteh.com

5. CYLINDRICAL ROLLER BEARINGS

5.1. Single-row cylindrical roller bearings - types – NU, NUB, NUC



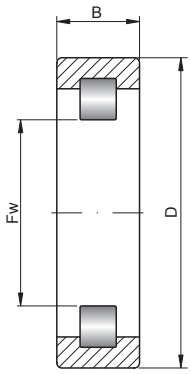

RNU..

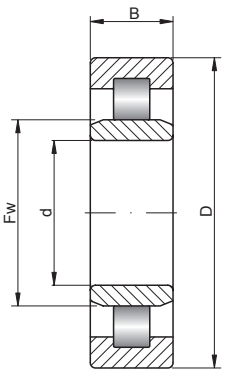

NU..

50 – 75 mm

Shaft [mm]	Bearing No.	Inner ring IR	Series		Dimensions [mm]				Weight [kg]
			SD	SB	d	D	B	Fw	
50	**NU1010**	IR50X57,5X16	0	0	50	80	16	57,5	0,306
	NU210 E	IR50X59,5X20	2	0	50	90	20	59,5	0,497
	NU2210 E	IR50X59,5X23	2	2	50	90	23	59,5	0,58
	NU5210	IR50X60,4X30,16	2	5	50	90	30,16	60,4	0,877
	NU3210	IR50X60,4X30,2	2	3	50	90	30,2	60,4	0,829
	NU310 E	IR50X65X27	3	0	50	110	27	65	1,15
	NU2310 E	IR50X65X40	3	2	50	110	40	65	1,76
	NU3310	IR50X65X44,4	3	3	50	110	44,4	65	2,14
	NU410	IR50X70,8X31	4	0	50	130	31	70,8	2,01
55	**NU1011**	IR55X64,5X18	0	0	55	90	18	64,5	0,445
	NU211 E	IR55X66X21	2	0	55	100	21	66	0,65
	NU2211 E	IR55X66X25	2	2	55	100	25	66	0,806
	NU3211	IR55X66,5X33,3	2	3	55	100	33,3	66,5	1,14
	NU5211	IR55X66,9X33,34	2	5	55	100	33,34	66,9	1,2
	NU311 E	IR55X70,5X29	3	0	55	120	29	70,5	1,5
	NU2311 E	IR55X70,5X43	3	2	55	120	43	70,5	2,25
	NU3311	IR55X70,5X49,2	3	3	55	120	49,2	70,5	2,81
	NU411	IR55X77,2X33	4	0	55	140	33	77,2	2,51
60	**NU1012**	IR60X69,5X18	0	0	60	95	18	69,5	0,477
	NU212 E	IR60X72X22	2	0	60	110	22	72	0,83
	NU2212 E	IR60X72X28	2	2	60	110	28	72	1,09
	NU3212	IR60X73,5X36,5	2	3	60	110	36,5	73,5	1,52
	NU5212	IR60X72,3X36,5	2	5	60	110	36,5	72,3	1,59
	NU312 E	IR60X77X31	3	0	60	130	31	77	1,87
	NU2312 E	IR60X77X46	3	2	60	130	46	77	2,81
	NU3312	IR60X77X54	3	3	60	130	54	77	3,61
	NU412	IR60X83X35	4	0	60	150	35	83	3,02
65	**NU1013**	IR65X74,5X18	0	0	65	100	18	74,5	0,506
	NU3013	IR65X74,5X26	0	3	65	100	26	74,5	0,7
	NU213 E	IR65X78,5X23	2	0	65	120	23	78,5	1,05
	NU2213 E	IR65X78,5X31	2	2	65	120	31	78,5	1,45
	NU3213	IR65X79,6X38,1	2	3	65	120	38,1	79,6	1,9
	NU5213	IR65X80,4X38,1	2	5	65	120	38,1	80,4	1,88
	NU313 E	IR65X82,5X33	3	0	65	140	33	82,5	2,31
	NU2313 E	IR65X82,5X48	3	2	65	140	48	82,5	3,36
	NU3313	IR65X83,5X58,7	3	3	65	140	58,7	83,5	4,53
	NU413	IR65X89,3X37	4	0	65	160	37	89,3	3,58
70	**NU1014**	IR70X80X20	0	0	70	110	20	80	0,702
	NU214 E	IR70X83,5X24	2	0	70	125	24	83,5	1,16
	NU2214 E	IR70X83,5X31	2	2	70	125	31	83,5	1,53
	NU5214	IR70X84,8X39,69	2	5	70	125	39,69	84,8	2,22
	NU3214	IR70X84,5X39,7	2	3	70	125	39,7	84,5	2,09
	NU314 E	IR70X89X35	3	0	70	150	35	89	2,81
	NU2314 E	IR70X89X51	3	2	70	150	51	89	4,08
	NU3314	IR70X90X63,5	3	3	70	150	63,5	90	5,62
	NU414	IR70X100X42	4	0	70	180	42	100	5,26
75	**NU1015**	IR75X85X20	0	0	75	115	20	85	0,735
	NU215 E	IR75X88,5X25	2	0	75	130	25	88,5	1,29
	NU2215 E	IR75X88,5X31	2	2	75	130	31	88,5	1,61
	NU5215	IR75X89X41,28	2	5	75	130	41,28	89	2,41
	NU3215	IR75X88,5X41,3	2	3	75	130	41,3	88,5	2,28

- warehouse - order - phone

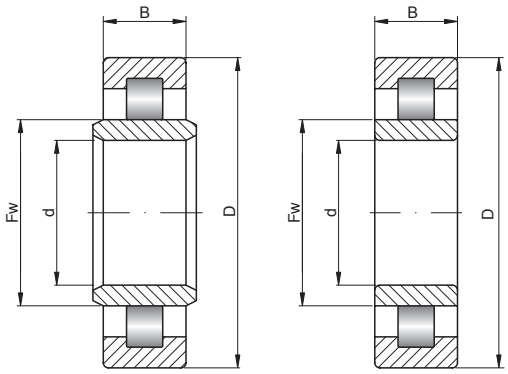

NUB.. NUC..

Basic load ratings [kN]		Limiting speed [rpm]		Basic makes*									Bearing No.
dyn. C	stat. C_0	grease	oil	-	M	TV	C2	C3	C4	K	NUB	NUC	
33,6	36,8	8400	9900	◴	◝	◝	◝	◴	◝	◝	◝	◝	**NU1010**
66,1	71,9	7100	8500	◓	◝	◝	◝	◴	◴	◝	◝	◝	**NU210 E**
79,7	91,5	6400	8500	◓	◝	◝	◝	◴	◴	◝	◝	◝	**NU2210 E**
92,6	128	6300	7500	◝	◝	◝	◝	◝	◝	◝	◝	◝	**NU5210**
86,2	108	5700	8500	◝	◝	◝	◝	◝	◝	◝	◝	◝	**NU3210**
110	113	5500	7400	◓	◝	◝	◝	◴	◴	◝	◝	◝	**NU310 E**
163	187	4900	7400	◓	◝	◝	◝	◴	◴	◝	◝	◝	**NU2310 E**
156	183	5000	7500	◝	◝	◝	◝	◝	◝	◝	◝	◝	**NU3310**
139	136	4900	6600	◓	◴	◝	◝	◴	◴	◝	◝	◝	**NU410**
37,4	43,8	7600	8900	◴	◝	◝	◝	◴	◴	◝	◝	◝	**NU1011**
86,4	98,7	6400	7700	◓	◝	◝	◝	◴	◴	◝	◝	◝	**NU211 E**
101	122	5800	7700	◓	◴	◝	◝	◴	◴	◝	◝	◝	**NU2211 E**
95,5	118	5100	7700	◝	◝	◝	◝	◝	◝	◝	◝	◝	**NU3211**
119	171	5600	6700	◝	◝	◝	◝	◝	◝	◝	◝	◝	**NU5211**
137	143	5100	6700	◓	◴	◝	◝	◴	◴	◝	◝	◝	**NU311 E**
201	233	4500	6700	◓	◴	◝	◝	◴	◴	◝	◝	◝	**NU2311 E**
188	220	4500	6800	◝	◝	◝	◝	◝	◝	◝	◝	◝	**NU3311**
142	138	4600	6100	◓	◴	◝	◝	◴	◴	◝	◝	◝	**NU411**
42,1	50	7000	8300	◴	◝	◝	◝	◴	◴	◝	◝	◝	**NU1012**
97,7	107	5800	6900	◓	◝	◝	◝	◴	◴	◝	◝	◝	**NU212 E**
131	157	5200	6900	◓	◴	◝	◝	◴	◴	◝	◝	◝	**NU2212 E**
128	167	4700	7000	◝	◝	◝	◝	◝	◝	◝	◝	◝	**NU3212**
150	211	5300	6300	◝	◝	◝	◝	◝	◝	◝	◝	◝	**NU5212**
150	157	4600	6200	◓	◴	◝	◝	◴	◴	◝	◝	◝	**NU312 E**
223	262	4100	6200	◓	◴	◝	◝	◴	◴	◝	◝	◝	**NU2312 E**
220	265	4200	6300	◝	◝	◝	◝	◝	◝	◝	◝	◝	**NU3312**
178	184	4200	5700	◓	◴	◝	◝	◴	◴	◝	◝	◝	**NU412**
43,3	52,9	6600	7800	◴	◝	◝	◝	◴	◴	◝	◝	◝	**NU1013**
105	146	6300	7500	◝	◝	◝	◝	◝	◝	◝	◝	◝	**NU3013**
108	119	5300	6400	◓	◝	◝	◝	◴	◴	◝	◝	◝	**NU213 E**
149	181	4800	6400	◓	◴	◝	◝	◴	◴	◝	◝	◝	**NU2213 E**
148	197	4300	6400	◝	◝	◝	◝	◝	◝	◝	◝	◝	**NU3213**
139	196	4700	5600	◝	◝	◝	◝	◝	◝	◝	◝	◝	**NU5213**
181	191	4300	5700	◓	◴	◝	◝	◴	◴	◝	◝	◝	**NU313 E**
251	287	3800	5700	◓	◴	◝	◝	◴	◴	◝	◝	◝	**NU2313 E**
241	294	3900	5800	◝	◝	◝	◝	◝	◝	◝	◝	◝	**NU3313**
198	203	4000	5300	◓	◴	◝	◝	◴	◴	◝	◝	◝	**NU413**
57,9	70,4	6100	7200	◴	◝	◝	◝	◴	◴	◝	◝	◝	**NU1014**
119	137	5000	6000	◓	◝	◝	◝	◴	◴	◝	◝	◝	**NU214 E**
156	194	4500	6000	◓	◴	◝	◝	◴	◴	◝	◝	◝	**NU2214 E**
178	261	4700	5600	◝	◝	◝	◝	◝	◝	◝	◝	◝	**NU5214**
147	198	4100	6100	◝	◝	◝	◝	◝	◝	◝	◝	◝	**NU3214**
205	222	4000	5300	◓	◴	◝	◝	◴	◴	◝	◝	◝	**NU314 E**
275	323	3600	5300	◓	◴	◝	◝	◴	◴	◝	◝	◝	**NU2314 E**
283	356	3600	5400	◝	◝	◝	◝	◝	◝	◝	◝	◝	**NU3314**
246	257	3500	4700	◓	◴	◝	◝	◴	◴	◝	◝	◝	**NU414**
63,6	78,1	5700	6800	◴	◝	◝	◝	◴	◴	◝	◝	◝	**NU1015**
130	156	4800	5700	◓	◴	◝	◝	◴	◴	◝	◝	◝	**NU215 E**
162	207	4300	5700	◓	◴	◝	◝	◴	◴	◝	◝	◝	**NU2215 E**
196	299	4500	5300	◝	◝	◝	◝	◝	◝	◝	◝	◝	**NU5215**
167	226	3900	5800	◝	◝	◝	◝	◝	◝	◝	◝	◝	**NU3215**

* Other products also available



https://nppnovoteh.com

5. CYLINDRICAL ROLLER BEARINGS

5.1. Single-row cylindrical roller bearings - types – NU, NUB, NUC



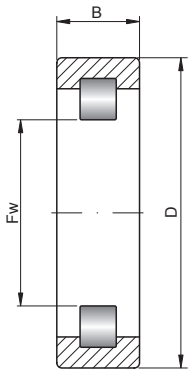

RNU..

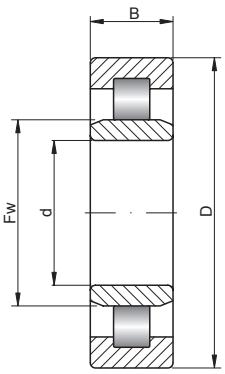

NU..

75 – 100 mm

Shaft [mm]	Bearing No.	Inner ring IR	Series		Dimensions [mm]				Weight [kg]
			SD	SB	d	D	B	Fw	
75 cont.	**NU315 E**	IR75X95X37	3	0	75	160	37	95	3,37
	NU2315 E	IR75X95X55	3	2	75	160	55	95	5
	NU3315	IR75X95,5X68,3	3	3	75	160	68,3	95,5	6,86
	NU415	IR75X104,5X45	4	0	75	190	45	104,5	6,25
80	**NU1016**	IR80X91,5X22	0	0	80	125	22	91,5	0,994
	NU216 E	IR80X95,3X26	2	0	80	140	26	95,3	1,56
	NU2216 E	IR80X95,3X33	2	2	80	140	33	95,3	2,03
	NU3216	IR80X95,3X44,4	2	3	80	140	44,4	95,3	2,87
	NU5216	IR80X95,2X44,45	2	5	80	140	44,45	95,2	2,91
	NU316 E	IR80X101X39	3	0	80	170	39	101	4
	NU2316 E	IR80X101X58	3	2	80	170	58	101	5,95
	NU3316	IR80X103X68,3	3	3	80	170	68,3	103	7,72
	NU416	IR80X110X48	4	0	80	200	48	110	7,28
85	**NU1017**	IR85X96,5X22	0	0	85	130	22	96,5	1,04
	NU217 E	IR85X100,5X28	2	0	85	150	28	100,5	1,94
	NU2217 E	IR85X100,5X36	2	2	85	150	36	100,5	2,53
	NU3217	IR85X101,8X49,2	2	3	85	150	49,2	101,8	3,67
	NU5217	IR85X102X49,21	2	5	85	150	49,21	102	3,69
	NU317 E	IR85X108X41	3	0	85	180	41	108	4,8
	NU2317 E	IR85X108X60	3	2	85	180	60	108	6,98
	NU3317	IR85X108X73	3	3	85	180	73	108	9,23
	NU417	IR85X113X52	4	0	85	210	52	113	8,68
90	**NU1018**	IR90X103X24	0	0	90	140	24	103	1,34
	NU218 E	IR90X107X30	2	0	90	160	30	107	2,38
	NU2218 E	IR90X107X40	2	2	90	160	40	107	3,21
	NU3218	IR90X107X52,4	2	3	90	160	52,4	107	4,49
	NU5218	IR90X107,2X52,4	2	5	90	160	52,4	107,2	4,48
	NU318 E	IR90X113,5X43	3	0	90	190	43	113,5	5,47
	NU2318 E	IR90X113,5X64	3	2	90	190	64	113,5	8,12
	NU3318	IR90X115X73	3	3	90	190	73	115	10,3
	NU418	IR90X123,5X54	4	0	90	225	54	123,5	10,3
95	**NU1019**	IR95X108X24	0	0	95	145	24	108	1,4
	NU219 E	IR95X112,5X32	2	0	95	170	32	112,5	2,92
	NU2219 E	IR95X112,5X43	2	2	95	170	43	112,5	3,93
	NU5219	IR95X113,5X55,56	2	5	95	170	55,56	113,5	5,65
	NU3219	IR95X113,5X55,6	2	3	95	170	55,6	113,5	5,42
	NU319 E	IR95X121,5X45	3	0	95	200	45	121,5	6,42
	NU2319 E	IR95X121,5X67	3	2	95	200	67	121,5	9,39
	NU3319	IR95X121,5X77,8	3	3	95	200	77,8	121,5	12,1
	NU419	IR95X133,5X55	4	0	95	240	55	133,5	13,6
100	**NU1920**	IR100X110X20	9	0	100	140	20	110	0,912
	NU1020	IR100X113X24	0	0	100	150	24	113	1,46
	NU220 E	IR100X119X34	2	0	100	180	34	119	3,52
	NU2220 E	IR100X119X46	2	2	100	180	46	119	4,82
	NU3220	IR100X120X60,3	2	3	100	180	60,3	120	6,62
	NU5220	IR100X121X60,32	2	5	100	180	60,32	121	6,49
	NU320 E	IR100X127,5X47	3	0	100	215	47	127,5	7,75
	NU2320 E	IR100X127,5X73	3	2	100	215	73	127,5	12,1
	NU3320	IR100X129,5X82,6	3	3	100	215	82,6	129,5	15
	NU420	IR100X139X58	4	0	100	250	58	139	14

- warehouse - order - phone

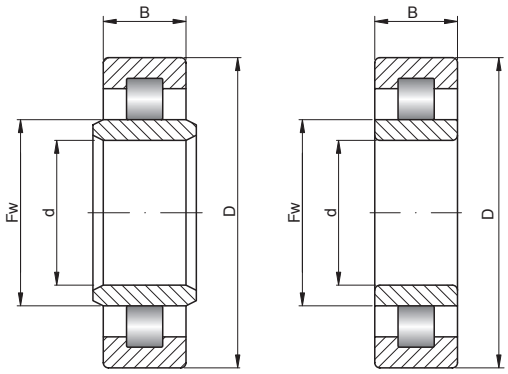

NUB.. NUC..

Basic load ratings [kN]		Limiting speed [rpm]		Basic makes*									Bearing No.
dyn. C	stat. C_0	grease	oil	-	M	TV	C2	C3	C4	K	NUB	NUC	
240	263	3700	5000	●	◴	◝	◝	◴	◴	◝	◝	◝	**NU315 E**
329	395	3300	5000	●	◴	◝	◝	◴	◴	◝	◝	◝	**NU2315 E**
338	430	3400	5000	◝	◝	◝	◝	◝	◝	◝	◝	◝	**NU3315**
265	274	3300	4400	●	◴	◝	◝	◴	◴	◝	◝	◝	**NU415**
69,3	86,4	5300	6300	◴	◝	◝	◝	◴	◴	◝	◝	◝	**NU1016**
139	167	4400	5300	●	◴	◝	◝	◴	◴	◝	◝	◝	**NU216 E**
186	243	4000	5300	●	◴	◝	◝	◴	◴	◝	◝	◝	**NU2216 E**
190	259	3600	5400	◝	◝	◝	◝	◝	◝	◝	◝	◝	**NU3216**
185	282	4200	5000	◝	◝	◝	◝	◝	◝	◝	◝	◝	**NU5216**
259	282	3500	4700	●	◴	◝	◝	◴	◴	◝	◝	◝	**NU316 E**
361	431	3100	4700	●	◴	◝	◝	◴	◴	◝	◝	◝	**NU2316 E**
338	436	3100	4700	◝	◝	◝	◝	◝	◝	◝	◝	◝	**NU3316**
302	315	3100	4200	●	◴	◝	◝	◴	◴	◝	◝	◝	**NU416**
71,4	91,2	5100	6000	◴	◝	◝	◝	◴	◴	◝	◝	◝	**NU1017**
167	199	4200	5000	●	◴	◝	◝	◴	◴	◝	◝	◝	**NU217 E**
218	279	3700	5000	●	◴	◝	◝	◴	◴	◝	◝	◝	**NU2217 E**
215	296	3300	5000	◝	◝	◝	◝	◝	◝	◝	◝	◝	**NU3217**
211	316	3800	4500	◝	◝	◝	◝	◝	◝	◝	◝	◝	**NU5217**
291	330	3300	4400	●	◴	◝	◝	◴	◴	◝	◝	◝	**NU317 E**
394	485	2900	4400	●	◴	◝	◝	◴	◴	◝	◝	◝	**NU2317 E**
399	517	3000	4500	◝	◝	◝	◝	◝	◝	◝	◝	◝	**NU3317**
340	350	3000	4000	●	◴	◝	◝	◴	◴	◝	◝	◝	**NU417**
84,7	109	4700	5600	◴	◝	◝	◝	◴	◴	◝	◝	◝	**NU1018**
182	217	3900	4700	●	◴	◝	◝	◴	◴	◝	◝	◝	**NU218 E**
242	314	3500	4700	●	◴	◝	◝	◴	◴	◝	◝	◝	**NU2218 E**
270	373	3100	4700	◝	◝	◝	◝	◝	◝	◝	◝	◝	**NU3218**
237	355	3500	4200	◝	◝	◝	◝	◝	◝	◝	◝	◝	**NU5218**
316	355	3100	4100	●	◴	◝	◝	◴	◴	◝	◝	◝	**NU318 E**
437	534	2800	4100	●	◴	◝	◝	◴	◴	◝	◝	◝	**NU2318 E**
428	559	2800	4200	◝	◝	◝	◝	◝	◝	◝	◝	◝	**NU3318**
374	400	2800	3700	●	◴	◝	◝	◴	◴	◝	◝	◝	**NU418**
87,2	115	4500	5300	◴	◝	◝	◝	◴	◴	◝	◝	◝	**NU1019**
221	265	3700	4400	●	◴	◝	◝	◴	◴	◝	◝	◝	**NU219 E**
287	371	3300	4400	●	◴	◝	◝	◴	◴	◝	◝	◝	**NU2219 E**
335	511	3300	4000	◝	◝	◝	◝	◝	◝	◝	◝	◝	**NU5219**
297	412	3000	4400	◝	◝	◝	◝	◝	◝	◝	◝	◝	**NU3219**
334	387	2900	3900	●	◴	◝	◝	◴	◴	◝	◝	◝	**NU319 E**
394	496	2600	4000	●	◴	◝	◝	◴	◴	◝	◝	◝	**NU2319 E**
487	654	2600	4000	◝	◝	◝	◝	◝	◝	◝	◝	◝	**NU3319**
410	444	2600	3400	●	◴	◝	◝	◴	◴	◝	◝	◝	**NU419**
67,7	94,4	4500	5300	◝	◝	◝	◝	◝	◝	◝	◝	◝	**NU1920**
91	120	4300	5100	◴	◴	◝	◝	◴	◴	◝	◝	◝	**NU1020**
250	306	3500	4200	●	◴	◝	◝	◴	◴	◝	◝	◝	**NU220 E**
334	444	3100	4200	●	◴	◝	◝	◴	◴	◝	◝	◝	**NU2220 E**
327	459	2800	4200	◝	◝	◝	◝	◝	◝	◝	◝	◝	**NU3220**
304	473	3200	3800	◝	◝	◝	◝	◝	◝	◝	◝	◝	**NU5220**
379	424	2700	3600	●	◴	◝	◝	◴	◴	◝	◝	◝	**NU320 E**
570	717	2400	3600	●	◴	◝	◝	◴	◴	◝	◝	◝	**NU2320 E**
530	706	2500	3700	◝	◝	◝	◝	◝	◝	◝	◝	◝	**NU3320**
458	498	2500	3300	●	◴	◝	◝	◴	◴	◝	◝	◝	**NU420**



* Other products also available

https://nppnovoteh.com

5. CYLINDRICAL ROLLER BEARINGS

5.1. Single-row cylindrical roller bearings - types – NU, NUB, NUC



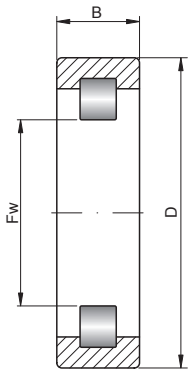

RNU..

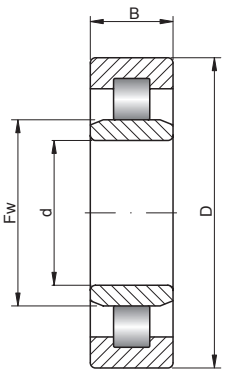

NU..

105 – 150 mm

Shaft [mm]	Bearing No.	Inner ring IR	Series		Dimensions [mm]				Weight [kg]
			SD	SB	d	D	B	Fw	
105	**NU1921**	IR105X115X20	9	0	105	145	20	115	0,951
	NU1021	IR105X119,5X26	0	0	105	160	26	119,5	1,85
	NU221 E	IR105X125,5X36	2	0	105	190	36	125,5	4
	NU3221	IR105X126,8X65,1	2	3	105	190	65,1	126,8	8
	NU5221	IR105X126,5X65,1	2	5	105	190	65,1	126,5	7,94
	NU321 E	IR105X133X49	3	0	105	225	49	133	8,76
	NU3321	IR105X135X87,3	3	3	105	225	87,3	135	17,4
	NU421	IR105X144,5X60	4	0	105	260	60	144,5	19,1
110	**NU1022**	IR110X125X28	0	0	110	170	28	125	2,31
	NU222 E	IR110X132,5X38	2	0	110	200	38	132,5	4,9
	NU2222 E	IR110X132,5X53	2	2	110	200	53	132,5	6,93
	NU3222	IR110X132,5X69,8	2	3	110	200	69,8	132,5	9,55
	NU5222		2	5	110	200	69,85	132,9	10
	NU322 E	IR110X143X50	3	0	110	240	50	143	10,7
	NU2322 E	IR110X143X80	3	2	110	240	80	143	18,8
	NU3322	IR110X143X92,1	3	3	110	240	92,1	143	21,1
	NU422	IR110X155X65	4	0	110	280	65	155	19,9
120	**NU2924**	IR120X131,5X27	9	2	120	180	27	131,5	1,72
	NU1024	IR120X135X28	0	0	120	180	28	135	2,47
	NU224 E	IR120X143,5X40	2	0	120	215	40	143,5	5,85
	NU2224 E	IR120X143,5X58	2	2	120	215	58	143,5	8,56
	NU3224	IR120X143,5X76	2	3	120	215	76	143,5	11,9
	NU5224	IR120X145,1X76,2	2	5	120	215	76,2	145,1	11,8
	NU324 E	IR120X154X55	3	0	120	260	55	154	13,4
	NU2324 E	IR120X154X86	3	2	120	260	86	154	23,1
	NU3324	IR120X154X106	3	3	120	260	106	154	28,3
	NU424	IR120X170X72	4	0	120	310	72	170	28
130	**NU1926**	IR130X142X24	9	0	130	180	24	142	1,79
	NU2926	IR130X142X30	9	2	130	180	30	142	2,27
	NU1026	IR130X148X33	0	0	130	200	33	148	3,77
	NU2026	IR130X147X42	0	2	130	200	42	147	4,6
	NU226 E	IR130X153,5X40	2	0	130	230	40	153,5	6,6
	NU2226 E	IR130X153,5X64	2	2	130	230	64	153,5	11,2
	NU5226	IR130X155X79,38	2	5	130	230	79,38	155	13,8
	NU3226	IR130X156X80	2	3	130	230	80	156	14,1
	NU326 E	IR130X167X58	3	0	130	280	58	167	16,7
	NU2326 E	IR130X167X93	3	2	130	280	93	167	29,1
	NU3326	IR130X167X112	3	3	130	280	112	167	34,6
	NU426	IR130X185X78	4	0	130	340	78	185	36,1
140	**NU1928**	IR140X152X24	9	0	140	190	24	152	1,9
	NU2928	IR140X152X30	9	2	140	190	30	152	2,49
	NU1028	IR140X158X33	0	0	140	210	33	158	4
	NU228 E	IR140X169X42	2	0	140	250	42	169	8,5
	NU2228 E	IR140X169X68	2	2	140	250	68	169	14,3
	NU5228		2	5	140	250	82,55	168,4	17,1
	NU3228	IR140X169X88	2	3	140	250	88	169	18,5
	NU328 E	IR140X180X62	3	0	140	300	62	180	20,4
	NU2328 E	IR140X180X102	3	2	140	300	102	180	36,8
	NU3328	IR140X180X118	3	3	140	300	118	180	41,5
	NU428	IR140X198X82	4	0	140	360	82	198	46,8
150	**NU1030**	IR150X169,5X35	0	0	150	225	35	169,5	4,83

- warehouse - order - phone

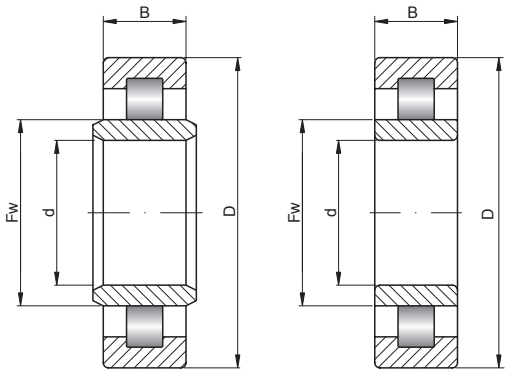

NUB.. NUC..

Basic load ratings [kN]		Limiting speed [rpm]		Basic makes*									Bearing No.
dyn. C	stat. C_0	grease	oil	-	M	TV	C2	C3	C4	K	NUB	NUC	
71	102	4100	4900	●	●	●	●	●	●	●	●	●	**NU1921**
108	149	4100	4800	◴	◴	●	●	◴	◴	●	●	●	**NU1021**
201	241	3300	3900	◓	◴	●	●	◴	◴	●	●	●	**NU221 E**
344	482	2600	3900	●	●	●	●	●	●	●	●	●	**NU3221**
362	573	3000	3500	●	●	●	●	●	●	●	●	●	**NU5221**
440	500	2600	3500	◓	◴	●	●	◴	◴	●	●	●	**NU321 E**
638	871	2300	3500	●	●	●	●	●	●	●	●	●	**NU3321**
471	510	2400	3100	◓	◴	●	●	◴	◴	●	●	●	**NU421**
134	171	3800	4500	◴	◴	●	●	◴	◴	●	●	●	**NU1022**
293	365	3100	3700	◓	◴	●	●	◴	◴	●	●	●	**NU222 E**
384	517	2800	3700	◓	◴	●	●	◴	◴	●	●	●	**NU2222 E**
427	607	2500	3700	●	●	●	●	●	●	●	●	●	**NU3222**
464	736	3000	3500	●	●	●	●	●	●	●	●	●	**NU5222**
451	525	2400	3200	◓	◴	●	●	◴	◴	●	●	●	**NU322 E**
680	880	2200	3200	◓	◴	●	●	◴	◴	●	●	●	**NU2322 E**
678	918	2200	3300	●	●	●	●	●	●	●	●	●	**NU3322**
550	621	2200	2900	◓	◴	●	●	◴	◴	●	●	●	**NU422**
116	188	3700	4600	●	●	●	●	●	●	●	●	●	**NU2924**
137	181	3500	4200	◴	◴	●	●	◴	◴	●	●	●	**NU1024**
336	421	2800	3400	◓	◴	●	●	◴	◴	●	●	●	**NU224 E**
452	619	2600	3400	◓	◴	●	●	◴	◴	●	●	●	**NU2224 E**
477	695	2300	3400	●	●	●	●	●	●	●	●	●	**NU3224**
482	794	2700	3200	●	●	●	●	●	●	●	●	●	**NU5224**
528	610	2200	3000	◓	◴	●	●	◴	◴	●	●	●	**NU324 E**
793	1030	2000	3000	◓	◴	●	●	◴	◴	●	●	●	**NU2324 E**
826	1120	2000	3000	●	●	●	●	●	●	●	●	●	**NU3324**
690	770	1900	2600	◓	◴	●	●	◴	◴	●	●	●	**NU424**
112	163	3600	4600	●	●	●	●	●	●	●	●	●	**NU1926**
152	243	3500	4500	●	●	●	●	●	●	●	●	●	**NU2926**
171	238	3200	3800	◴	◴	●	●	◴	◴	●	●	●	**NU1026**
297	440	3200	4800	●	●	●	●	●	●	●	●	●	**NU2026**
364	453	2600	3200	◓	◴	●	●	◴	◴	●	●	●	**NU226 E**
530	737	2400	3200	◓	◴	●	●	◴	◴	●	●	●	**NU2226 E**
511	841	2500	3000	●	●	●	●	●	●	●	●	●	**NU5226**
550	857	2100	3200	●	●	●	●	●	●	●	●	●	**NU3226**
616	736	2000	2700	◓	◴	●	●	◴	◴	●	●	●	**NU326 E**
920	1230	1800	2700	◓	◴	●	●	◴	◴	●	●	●	**NU2326 E**
936	1290	1800	2700	●	●	●	●	●	●	●	●	●	**NU3326**
771	876	1800	2300	◓	◴	●	●	◴	◴	●	●	●	**NU426**
117	177	3200	4400	●	●	●	●	●	●	●	●	●	**NU1928**
165	275	3250	4400	●	●	●	●	●	●	●	●	●	**NU2928**
175	250	3000	3600	◴	◴	●	●	◴	◴	●	●	●	**NU1028**
392	514	2400	2900	◓	◴	●	●	◴	◴	●	●	●	**NU228 E**
572	835	2200	2900	◓	◴	●	●	◴	◴	●	●	●	**NU2228 E**
596	981	2200	2700	●	●	●	●	●	●	●	●	●	**NU5228**
604	939	1900	2900	●	●	●	●	●	●	●	●	●	**NU3228**
663	797	1900	2500	◓	◴	●	●	◴	◴	●	●	●	**NU328 E**
1020	1380	1700	2500	◴	◴	●	●	◴	◴	●	●	●	**NU2328 E**
1090	1550	1700	2500	●	●	●	●	●	●	●	●	●	**NU3328**
874	1020	1600	2200	◴	◴	●	●	◴	◴	●	●	●	**NU428**
201	281	2800	3300	◴	◴	●	●	◴	◴	●	●	●	**NU1030**

* Other products also available



https://nppnovoteh.com

5. CYLINDRICAL ROLLER BEARINGS

5.1. Single-row cylindrical roller bearings - types – NU, NUB, NUC



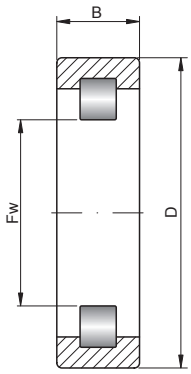

RNU..

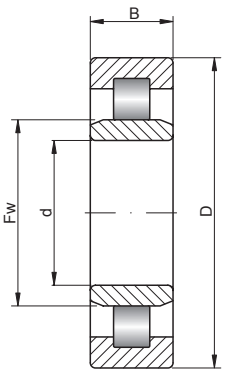

NU..

150 – 200 mm

Shaft [mm]	Bearing No.	Inner ring IR	Series		Dimensions [mm]				Weight [kg]
			SD	SB	d	D	B	Fw	
150 cont.	**NU3030**	IR150X171X56	0	3	150	225	56	171	8,03
	NU230 E	IR150X182X45	2	0	150	270	45	182	10,7
	NU2230 E	IR150X182X73	2	2	150	270	73	182	18,7
	NU5230	IR150X181,5X88,9	2	5	150	270	88,9	181,5	22,9
	NU3230	IR150X182X96	2	3	150	270	96	182	23,7
	NU330 E	IR150X193X65	3	0	150	320	65	193	27
	NU2330 E	IR150X193X108	3	2	150	320	108	193	44,7
	NU3330	IR150X193X128	3	3	150	320	128	193	51,4
	NU430	IR150X213X85	4	0	150	380	85	213	53,3
160	**NU1932**	IR160X175X28	9	0	160	220	28	175	3,08
	NU2932	IR160X175X36	9	2	160	220	36	175	4,05
	NU1032	IR160X180X38	0	0	160	240	38	180	5,93
	NU2032	IR160X179X48	0	2	160	240	48	179	7,9
	NU3132	IR160X187X86	1	3	160	270	86	187	20,6
	NU232 E	IR160X195X48	2	0	160	290	48	195	14,8
	NU2232 E	IR160X193X80	2	2	160	290	80	193	23,6
	NU5232		2	5	160	290	98,42	193,6	28,9
	NU3232	IR160X195X104	2	3	160	290	104	195	29,8
	NU332 E	IR160X204X68	3	0	160	340	68	204	32
	NU2332 E	IR160X204X114	3	2	160	340	114	204	53,1
	NU3332	IR160X208X136	3	3	160	340	136	208	61,5
170	**NU1034**	IR170X193X42	0	0	170	260	42	193	7,9
	NU2034	IR170X191X54	0	2	170	260	54	191	11
	NU3034	IR170X196X67	0	3	170	260	67	196	13
	NU234 E	IR170X207X52	2	0	170	310	52	207	18,6
	NU2234 E	IR170X205X86	2	2	170	310	86	205	29,2
	NU5234		2	5	170	310	104,77	205,4	35,5
	NU3234	IR170X208X110	2	3	170	310	110	208	36,2
	NU2334 E	IR170X216X120	3	2	170	360	120	216	62,6
	NU3334	IR170X220X140	3	3	170	360	140	220	70,8
	NU334 E	IR170X218X73	3	0	170	361	73	218	38,6
180	**NU1036**	IR180X205X46	0	0	180	280	46	205	10,5
	NU3036	IR180X207X74	0	3	180	280	74	207	17,3
	NU236 E	IR180X217X52	2	0	180	320	52	217	19,3
	NU2236 E	IR180X215X86	2	2	180	320	86	215	30,4
	NU3236	IR180X218X112	2	3	180	320	112	218	38,4
	NU336 E	IR180X231X75	3	0	180	380	75	231	42,6
	NU2336 E	IR180X227X126	3	2	180	380	126	227	73
	NU3336	IR180X232X150	3	3	180	380	150	232	84,4
	NU436	IR180X247X95	4	0	180	440	95	247	80
190	**NU1938**	IR190X207,5X33	9	0	190	260	33	207,5	5,5
	NU1038	IR190X215X46	0	0	190	290	46	215	10,9
	NU3038	IR190X217X75	0	3	190	290	75	217	18,4
	NU3138	IR190X223X104	1	3	190	320	104	223	34,5
	NU238 E	IR190X230X55	2	0	190	340	55	230	23,3
	NU2238 E	IR190X228X92	2	2	190	340	92	228	37
	NU3238	IR190X231X120	2	3	190	340	120	231	46,8
	NU338 E	IR190X245X78	3	0	190	400	78	245	49,9
	NU2338 E	IR190X245X132	3	2	190	400	132	245	84,7
	NU3338	IR190X245X155	3	3	190	400	155	245	96,5
200	**NU2840**	IR200X211,5X30	8	2	200	250	30	211,5	3,55

- warehouse - order - phone

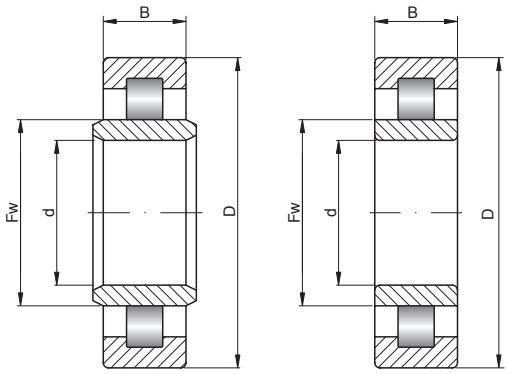

NUB.. NUC..

Basic load ratings [kN]		Limiting speed [rpm]		Basic makes*									Bearing No.
dyn. C	stat. C_0	grease	oil	-	M	TV	C2	C3	C4	K	NUB	NUC	
374	652	3000	4300	●	●	●	●	●	●	●	●	●	**NU3030**
448	594	2200	2600	■	◴	●	●	◴	◴	●	●	●	**NU230 E**
662	982	2000	2600	■	◴	●	●	◴	◴	●	●	●	**NU2230 E**
736	1260	2000	2400	●	●	●	●	●	●	●	●	●	**NU5230**
749	1200	1800	2700	●	●	●	●	●	●	●	●	●	**NU3230**
757	922	1700	2300	■	◴	●	●	◴	◴	●	●	●	**NU330 E**
1180	1600	1500	2300	◴	◴	●	●	◴	◴	●	●	●	**NU2330 E**
1180	1700	1600	2300	●	●	●	●	●	●	●	●	●	**NU3330**
930	1120	1500	2000	◴	◴	●	●	◴	◴	●	●	●	**NU430**
149	228	2900	4200	●	●	●	●	●	●	●	●	●	**NU1932**
199	330	3000	4300	●	●	●	●	●	●	●	●	●	**NU2932**
236	330	2600	3000	◴	◴	●	●	◴	◴	●	●	●	**NU1032**
418	670	2600	4000	●	●	●	●	●	●	●	●	●	**NU2032**
681	1070	2500	4000	●	●	●	●	●	●	●	●	●	**NU3132**
498	666	2000	2400	◴	◴	●	●	◴	◴	●	●	●	**NU232 E**
809	1190	1800	2400	◴	◴	●	●	◴	◴	●	●	●	**NU2232 E**
764	1310	1900	2200	●	●	●	●	●	●	●	●	●	**NU5232**
857	1390	1600	2500	●	●	●	●	●	●	●	●	●	**NU3232**
857	1050	1600	2100	◴	◴	●	●	◴	◴	●	●	●	**NU332 E**
1310	1820	1400	2100	◴	◴	●	●	◴	◴	●	●	●	**NU2332 E**
1270	1890	1400	2200	●	●	●	●	●	●	●	●	●	**NU3332**
276	400	2400	2800	◴	◴	●	●	◴	◴	●	●	●	**NU1034**
473	735	2400	3600	●	●	●	●	●	●	●	●	●	**NU2034**
461	824	2700	4000	●	●	●	●	●	●	●	●	●	**NU3034**
603	802	1900	2200	◴	◴	●	●	◴	◴	●	●	●	**NU234 E**
967	1410	1700	2200	◴	◴	●	●	◴	◴	●	●	●	**NU2234 E**
891	1470	1800	2100	●	●	●	●	●	●	●	●	●	**NU5234**
964	1580	1500	2300	●	●	●	●	●	●	●	●	●	**NU3234**
1220	1750	1300	2000	◴	◴	●	●	◴	◴	●	●	●	**NU2334 E**
1420	2120	1300	2000	●	●	●	●	●	●	●	●	●	**NU3334**
809	1010	1500	2000	◴	◴	●	●	◴	◴	●	●	●	**NU334 E**
356	503	2200	2600	◴	◴	●	●	◴	◴	●	●	●	**NU1036**
600	1040	2500	3800	●	●	●	●	●	●	●	●	●	**NU3036**
626	852	1800	2100	◴	◴	●	●	◴	◴	●	●	●	**NU236 E**
1010	1510	1600	2100	◴	◴	●	●	◴	◴	●	●	●	**NU2236 E**
999	1680	1400	2200	●	●	●	●	●	●	●	●	●	**NU3236**
917	1150	1400	1900	◴	◴	●	●	◴	◴	●	●	●	**NU336 E**
1350	1940	1300	1900	◴	◴	●	●	◴	◴	●	●	●	**NU2336 E**
1660	2520	1300	1900	●	●	●	●	●	●	●	●	●	**NU3336**
1250	1600	1600	2400	◴	◴	●	●	◴	◴	●	●	●	**NU436**
251	400	2750	4000	●	●	●	●	●	●	●	●	●	**NU1938**
366	530	2100	2500	◴	◴	●	●	◴	◴	●	●	●	**NU1038**
636	1140	2200	3600	●	●	●	●	●	●	●	●	●	**NU3038**
942	1570	2000	3200	●	●	●	●	●	●	●	●	●	**NU3138**
694	954	1700	2000	◴	◴	●	●	◴	◴	●	●	●	**NU238 E**
1100	1670	1500	2000	◴	◴	●	●	◴	◴	●	●	●	**NU2238 E**
1310	1930	1300	2000	●	●	●	●	●	●	●	●	●	**NU3238**
987	1260	1300	1800	◴	◴	●	●	◴	◴	●	●	●	**NU338 E**
1520	2220	1200	1800	◴	◴	●	●	◴	◴	●	●	●	**NU2338 E**
1870	2910	1200	1800	●	●	●	●	●	●	●	●	●	**NU3338**
183	345	2800	3600	●	●	●	●	●	●	●	●	●	**NU2840**

* Other products also available



https://nppnovoteh.com

5. CYLINDRICAL ROLLER BEARINGS

5.1. Single-row cylindrical roller bearings - types – NU, NUB, NUC



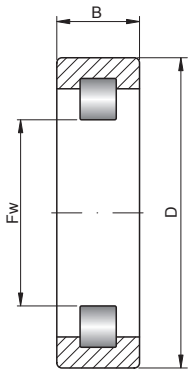

RNU..

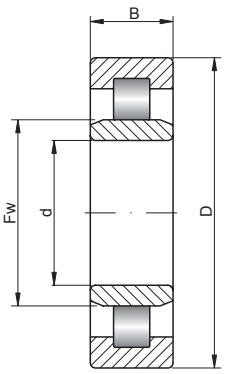

NU..

200 – 300 mm

Shaft [mm]	Bearing No.	Inner ring IR	Series		Dimensions [mm]				Weight [kg]
			SD	SB	d	D	B	Fw	
200 cont.	**NU1940**	IR200X218X38	9	0	200	280	38	218	7,4
	NU1040	IR200X229X51	0	0	200	310	51	229	14,1
	NU3040	IR200X232X82	0	3	200	310	82	232	23,7
	NU240 E	IR200X243X58	2	0	200	360	58	243	27,2
	NU2240 E	IR200X241X98	2	2	200	360	98	241	44,4
	NU3240	IR200X244X128	2	3	200	360	128	244	56,2
	NU340 E	IR200X258X80	3	0	200	420	80	258	56,2
	NU2340 E	IR200X253X138	3	2	200	420	138	253	97,4
	NU3340	IR200X260X165	3	3	200	420	165	260	113
220	**NU1944**	IR220X240X38	9	0	220	300	38	240	8,3
	NU2944	IR220X241,5X48	9	2	220	300	48	241,5	9,82
	NU1044	IR220X250X56	0	0	220	340	56	250	18,5
	NU3144	IR220X261X120	1	3	220	370	120	261	53,2
	NU244 E	IR220X268X65	2	0	220	400	65	268	38,5
	NU2244 E	IR220X259X108	2	2	220	400	108	259	60,9
	NU3244	IR220X270X144	2	3	220	400	144	270	78,8
	NU344 E	IR220X282X88	3	0	220	460	88	282	74,4
	NU2344 E	IR220X277X145	3	2	220	460	145	277	119
	NU3344	IR220X284X180	3	3	220	460	180	284	148
240	**NU1048**	IR240X270X56	0	0	240	360	56	270	20,1
	NU3048	IR240X276X92	0	3	240	360	92	276	33
	NU248 E	IR240X293X72	2	0	240	440	72	293	52,1
	NU2248 E	IR240X287X120	2	2	240	440	120	287	82,5
	NU3248	IR240X295X160	2	3	240	440	160	295	107
	NU348 E	IR240X306X95	3	0	240	500	95	306	94,6
	NU2348 E	IR240X303X155	3	2	240	500	155	303	152
	NU3348	IR240X310X195	3	3	240	500	195	310	189
260	**NU1952**	IR260X285X46	9	0	260	360	46	285	13,9
	NU2952	IR260X285X60	9	2	260	360	60	285	18,4
	NU1052	IR260X296X65	0	0	260	400	65	296	29,2
	NU3052	IR260X290,5X104	0	3	260	400	104	290,5	49,5
	NU3152	IR260X308X144	1	3	260	440	144	308	92,7
	NU252 E	IR260X317X80	2	0	260	480	80	317	69
	NU2252 E	IR260X313X130	2	2	260	480	130	313	107
	NU3252	IR260X320X174	2	3	260	480	174	320	139
	NU352 E	IR260X337X102	3	0	260	540	102	337	120
	NU2352 E	IR260X324X165	3	2	260	540	165	324	185
	NU3352	IR260X336X206	3	3	260	540	206	336	232
280	**NU3856**	IR280X298X52	8	3	280	350	52	298	11,5
	NU1956	IR280X305X46	9	0	280	380	46	305	14,7
	NU1056	IR280X316X65	0	0	280	420	65	316	35,2
	NU2056	IR280X314X82	0	2	280	420	82	314	40
	NU3156	IR280X328X146	1	3	280	460	146	328	97,2
	NU256 E	IR280X337X80	2	0	280	500	80	337	72,7
	NU2256 E	IR280X333X130	2	2	280	500	130	333	114
	NU356 E	IR280X362X108	3	0	280	580	108	362	145
	NU2356 E	IR280X351X175	3	2	280	580	175	351	231
300	**NU2860**	IR300X321X48	8	2	300	380	48	321	14
	NU3860	IR300X322X60	8	3	300	380	60	322	16,6
	NU1960	IR300X332X56	9	0	300	420	56	332	23,3
	NU1060	IR300X340X74	0	0	300	460	74	340	44,1

- warehouse - order - phone

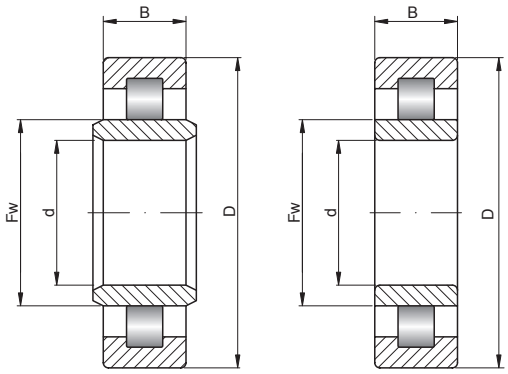

NUB.. NUC..

Basic load ratings [kN]		Limiting speed [rpm]		Basic makes*									Bearing No.
dyn. C	stat. C_0	grease	oil	-	M	TV	C2	C3	C4	K	NUB	NUC	
341	540	2600	3800	●	●	●	●	●	●	●	●	●	**NU1940**
388	582	1900	2300	●	●	●	●	●	●	●	●	●	**NU1040**
689	1250	2000	3400	●	●	●	●	●	●	●	●	●	**NU3040**
766	1060	1600	1900	◴	◴	●	●	◴	◴	●	●	●	**NU240 E**
1220	1870	1400	1900	◴	●	●	●	◴	◴	●	●	●	**NU2240 E**
1200	2020	1300	1900	●	●	●	●	●	●	●	●	●	**NU3240**
987	1270	1200	1700	◴	◴	●	●	◴	◴	●	●	●	**NU340 E**
1520	2240	1100	1700	◴	◴	●	●	◴	◴	●	●	●	**NU2340 E**
1870	2930	1100	1700	●	●	●	●	●	●	●	●	●	**NU3340**
336	560	2400	3200	●	●	●	●	●	●	●	●	●	**NU1944**
366	655	2000	3000	●	●	●	●	●	●	●	●	●	**NU2944**
507	748	1700	2000	●	●	●	●	●	●	●	●	●	**NU1044**
1230	2140	1700	2700	●	●	●	●	●	●	●	●	●	**NU3144**
766	1080	1400	1700	◴	◴	●	●	◴	◴	●	●	●	**NU244 E**
1130	1810	1200	1700	●	●	●	●	●	●	●	●	●	**NU2244 E**
1630	2880	1100	1700	●	●	●	●	●	●	●	●	●	**NU3244**
1200	1570	1100	1500	◴	◴	●	●	◴	◴	●	●	●	**NU344 E**
1810	2690	1000	1500	◴	◴	●	●	◴	◴	●	●	●	**NU2344 E**
2130	3300	990	1500	●	●	●	●	●	●	●	●	●	**NU3344**
535	822	1600	1900	●	●	●	●	●	●	●	●	●	**NU1048**
774	1450	1600	2600	●	●	●	●	●	●	●	●	●	**NU3048**
949	1340	1200	1500	◴	◴	●	●	◴	◴	●	●	●	**NU248 E**
1430	2320	1100	1500	●	●	●	●	●	●	●	●	●	**NU2248 E**
1950	3460	990	1500	●	●	●	●	●	●	●	●	●	**NU3248**
1430	1950	990	1300	●	●	●	●	●	●	●	●	●	**NU348 E**
2170	3320	900	1400	●	●	●	●	●	●	●	●	●	**NU2348 E**
2540	4070	880	1300	●	●	●	●	●	●	●	●	●	**NU3348**
410	686	2200	2900	●	●	●	●	●	●	●	●	●	**NU1952**
558	1020	1600	2400	●	●	●	●	●	●	●	●	●	**NU2952**
651	979	1400	1700	●	●	●	●	●	●	●	●	●	**NU1052**
1420	2320	1500	2400	●	●	●	●	●	●	●	●	●	**NU3052**
1730	3120	1400	2300	●	●	●	●	●	●	●	●	●	**NU3152**
1100	1580	1100	1300	◴	◴	●	●	◴	◴	●	●	●	**NU252 E**
1790	2950	990	1300	●	●	●	●	●	●	●	●	●	**NU2252 E**
2140	3680	880	1300	●	●	●	●	●	●	●	●	●	**NU3252**
1900	2600	900	1100	●	●	●	●	●	●	●	●	●	**NU352 E**
2430	3750	800	1200	●	●	●	●	●	●	●	●	●	**NU2352 E**
2940	4790	790	1200	●	●	●	●	●	●	●	●	●	**NU3352**
427	968	2000	3300	●	●	●	●	●	●	●	●	●	**NU3856**
406	689	2000	2600	●	●	●	●	●	●	●	●	●	**NU1956**
669	1030	1300	1500	●	●	●	●	●	●	●	●	●	**NU1056**
1230	2160	1400	2200	●	●	●	●	●	●	●	●	●	**NU2056**
1810	3280	1300	2150	●	●	●	●	●	●	●	●	●	**NU3156**
1140	1680	1000	1200	◴	◴	●	●	◴	◴	●	●	●	**NU256 E**
2280	3600	900	1250	●	●	●	●	●	●	●	●	●	**NU2256 E**
2160	3000	800	1000	●	●	●	●	●	●	●	●	●	**NU356 E**
2750	4200	750	1100	●	●	●	●	●	●	●	●	●	**NU2356 E**
473	980	1700	1700	●	●	●	●	●	●	●	●	●	**NU2860**
543	1300	1800	2900	●	●	●	●	●	●	●	●	●	**NU3860**
507	873	1800	2300	●	●	●	●	●	●	●	●	●	**NU1960**
890	1380	1200	1400	●	●	●	●	●	●	●	●	●	**NU1060**

* Other products also available



https://nppnovoteh.com

5. CYLINDRICAL ROLLER BEARINGS

5.1. Single-row cylindrical roller bearings - types – NU, NUB, NUC



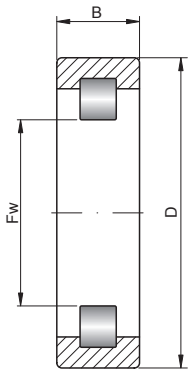

RNU..

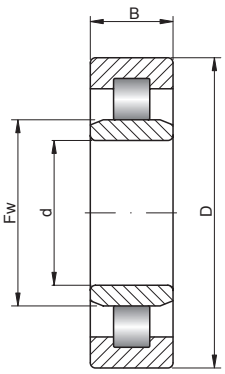

NU..

300 – 420 mm

Shaft [mm]	Bearing No.	Inner ring IR	Series		Dimensions [mm]				Weight [kg]
			SD	SB	d	D	B	Fw	
300 cont.	**NU2060**	IR300X341X95	0	2	300	460	95	341	59,5
	NU3060	IR300X346X118	0	3	300	460	118	346	71,3
	NU3160	IR300X352X160	1	3	300	500	160	352	129
	NU260 E	IR300X364X85	2	0	300	540	85	364	90,7
	NU2260	IR300X364X140	2	2	300	540	140	364	138
	NU2360	IR300X371X185	3	2	300	620	185	371	270
320	**NU1864**	IR320X341X38	8	0	320	400	38	341	11,7
	NU2864	IR320X341X48	8	2	320	400	48	341	14,5
	NU1964	IR320X350X56	9	0	320	440	56	350	27
	NU1064	IR320X360X74	0	0	320	480	74	360	48,4
	NU2064	IR320X360X95	0	2	320	480	95	360	62,5
	NU3064	IR320X366X121	0	3	320	480	121	366	76,4
	NU3164	IR320X368X176	1	3	320	540	176	368	175
	NU264 E	IR320X390X92	2	0	320	580	92	390	114
	NU2264	IR320X390X150	2	2	320	580	150	390	172
	NU364	IR320X425X112	3	0	320	670	112	425	199
340	**NU2868**	IR340X361X48	8	2	340	420	48	361	15
	NU3868	IR340X362X60	8	3	340	420	60	362	18,1
	NU1968	IR340X370X56	9	0	340	460	56	370	25,7
	NU2968	IR340X372X72	9	2	340	460	72	372	34,7
	NU1068	IR340X385X82	0	0	340	520	82	385	64,1
	NU3068	IR340X393X133	0	3	340	520	133	393	102
	NU3168	IR340X399X190	1	3	340	580	190	399	210
	NU2268	IR340X416X165	2	2	340	620	165	416	220
360	**NU1872**	IR360X380X38	8	0	360	440	38	380	11,7
	NU1972	IR360X392X56	9	0	360	480	56	392	27,3
	NU2972	IR360X393X72	9	2	360	480	72	393	37,2
	NU1072	IR360X405X82	0	0	360	540	82	405	67,1
	NU2072	IR360X405X106	0	2	360	540	106	405	88,5
	NU3072	IR360X413X134	0	3	360	540	134	413	111
	NU3172	IR360X405X192	1	3	360	600	192	405	225
	NU2272	IR360X437X170	2	2	360	650	170	437	250
	NU2372	IR360X465X224	3	2	360	750	224	465	510
380	**NU1876**	IR380X406X46	8	0	380	480	46	406	23
	NU3876	IR380X405X75	8	3	380	480	75	405	32,3
	NU1076	IR380X425X82	0	0	380	560	82	425	70,1
	NU2076	IR380X425X106	0	2	380	560	106	425	92,5
	NU3076	IR380X433X135	0	3	380	560	135	433	113
	NU2276	IR380X462X175	2	2	380	680	175	462	275
400	**NU1880**	IR400X426X46	8	0	400	500	46	426	20,1
	NU3880	IR400X426X75	8	3	400	500	75	426	34,2
	NU1980	IR400X435X65	9	0	400	540	65	435	41
	NU1080	IR400X450X90	0	0	400	600	90	450	91
	NU2080	IR400X449X118	0	2	400	600	118	449	120
	NU3080	IR400X450X148	0	3	400	600	148	450	148
420	**NU1884**	IR420X447X46	8	0	420	520	46	447	20,5
	NU3884	IR420X448X75	8	3	420	520	75	448	35,5
	NU1984	IR420X456X65	9	0	420	560	65	456	42,5
	NU2984	IR420X458X82	9	2	420	560	82	458	59
	NU1084	IR420X470X90	0	0	420	620	90	470	94,6

- warehouse - order - phone

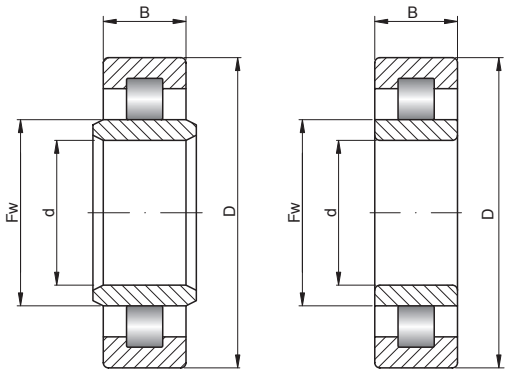

NUB.. NUC..

Basic load ratings [kN]		Limiting speed [rpm]		Basic makes*									Bearing No.
dyn. C	stat. C_0	grease	oil	-	M	TV	C2	C3	C4	K	NUB	NUC	
1510	2750	1300	2000	●	●	●	●	●	●	●	●	●	**NU2060**
1290	2470	1400	2200	●	●	●	●	●	●	●	●	●	**NU3060**
2150	3940	1250	1900	●	●	●	●	●	●	●	●	●	**NU3160**
1350	1960	920	1100	◴	◴	●	●	◴	◴	●	●	●	**NU260 E**
2400	3800	880	1200	●	●	●	●	●	●	●	●	●	**NU2260**
4020	5850	950	1600	●	●	●	●	●	●	●	●	●	**NU2360**
369	710	1600	2400	●	●	●	●	●	●	●	●	●	**NU1864**
495	1060	1600	2400	●	●	●	●	●	●	●	●	●	**NU2864**
693	1200	1700	2100	●	●	●	●	●	●	●	●	●	**NU1964**
913	1450	1100	1300	●	●	●	●	●	●	●	●	●	**NU1064**
1450	265	1200	1900	●	●	●	●	●	●	●	●	●	**NU2064**
1320	2590	1350	2000	●	●	●	●	●	●	●	●	●	**NU3064**
3140	5400	1000	1700	●	●	●	●	●	●	●	●	●	**NU3164**
1540	2270	840	1000	◴	◴	●	●	◴	◴	●	●	●	**NU264 E**
3000	4100	850	1150	●	●	●	●	●	●	●	●	●	**NU2264**
2300	3200	750	950	●	●	●	●	●	●	●	●	●	**NU364**
512	1120	1500	2000	●	●	●	●	●	●	●	●	●	**NU2868**
624	1500	1500	2200	●	●	●	●	●	●	●	●	●	**NU3868**
605	1080	1600	2000	●	●	●	●	●	●	●	●	●	**NU1968**
800	1620	1400	1900	●	●	●	●	●	●	●	●	●	**NU2968**
1090	1750	980	1200	●	●	●	●	●	●	●	●	●	**NU1068**
1570	3080	1300	1900	●	●	●	●	●	●	●	●	●	**NU3068**
3190	5700	950	1600	●	●	●	●	●	●	●	●	●	**NU3168**
2640	4500	1000	1500	●	●	●	●	●	●	●	●	●	**NU2268**
339	692	1450	2200	●	●	●	●	●	●	●	●	●	**NU1872**
566	1060	1400	1800	●	●	●	●	●	●	●	●	●	**NU1972**
845	1820	1200	1700	●	●	●	●	●	●	●	●	●	**NU2972**
1120	1830	920	1100	●	●	●	●	●	●	●	●	●	**NU1072**
1940	3600	1100	1600	●	●	●	●	●	●	●	●	●	**NU2072**
1970	4180	1200	1700	●	●	●	●	●	●	●	●	●	**NU3072**
3410	5700	900	1500	●	●	●	●	●	●	●	●	●	**NU3172**
2920	4900	950	1400	●	●	●	●	●	●	●	●	●	**NU2272**
5010	8150	850	1300	●	●	●	●	●	●	●	●	●	**NU2372**
539	1060	1300	2000	●	●	●	●	●	●	●	●	●	**NU1876**
852	1970	1200	1800	●	●	●	●	●	●	●	●	●	**NU3876**
1150	1920	860	1000	●	●	●	●	●	●	●	●	●	**NU1076**
1980	3750	1000	1600	●	●	●	●	●	●	●	●	●	**NU2076**
1690	3470	1100	1600	●	●	●	●	●	●	●	●	●	**NU3076**
3140	5500	900	1400	●	●	●	●	●	●	●	●	●	**NU2276**
456	924	1250	1800	●	●	●	●	●	●	●	●	●	**NU1880**
852	2060	1100	1600	●	●	●	●	●	●	●	●	●	**NU3880**
952	1730	1200	1600	●	●	●	●	●	●	●	●	●	**NU1980**
1400	2310	780	920	●	●	●	●	●	●	●	●	●	**NU1080**
2200	4750	950	1400	●	●	●	●	●	●	●	●	●	**NU2080**
2250	4370	1000	1500	●	●	●	●	●	●	●	●	●	**NU3080**
550	1120	1200	1600	●	●	●	●	●	●	●	●	●	**NU1884**
882	2260	900	1100	●	●	●	●	●	●	●	●	●	**NU3884**
800	1510	1150	1500	●	●	●	●	●	●	●	●	●	**NU1984**
1210	2550	1100	1500	●	●	●	●	●	●	●	●	●	**NU2984**
1390	2320	730	860	●	●	●	●	●	●	●	●	●	**NU1084**

* Other products also available



https://nppnovoteh.com

5. CYLINDRICAL ROLLER BEARINGS

5.1. Single-row cylindrical roller bearings - types – NU, NUB, NUC



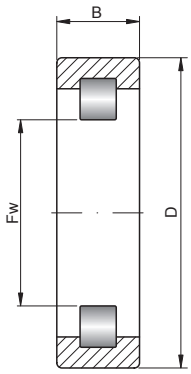

RNU..

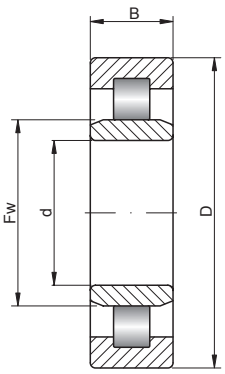

NU..

420 – 560 mm

Shaft [mm]	Bearing No.	Inner ring IR	Series		Dimensions [mm]				Weight [kg]
			SD	SB	d	D	B	Fw	
420 cont.	**NU2084**	IR420X469X118	0	2	420	620	118	469	125
	NU3084	IR420X470X150	0	3	420	620	150	470	156
	NU3184	IR420X485X224	1	3	420	700	224	485	380
440	**NU2888**	IR440X464X60	8	2	440	540	60	464	34
	NU1988	IR440X482X74	9	0	440	600	74	482	64
	NU2988	IR440X482X95	9	2	440	600	95	482	84
	NU3988	IR440X482X118	9	3	440	600	118	482	105
	NU1088	IR440X493X94	0	0	440	650	94	493	109
	NU2088	IR440X487X122	0	2	440	650	122	487	145
	NU3188	IR440X509X226	1	3	440	720	226	509	395
460	**NU2892**	IR460X489X72	8	2	460	580	72	489	48
	NU1992	IR460X500X74	9	0	460	620	74	500	60,8
	NU2992	IR460X495X95	9	2	460	620	95	495	89
	NU1092	IR460X516X100	0	0	460	680	100	516	127
	NU2092	IR460X513X128	0	2	460	680	128	513	165
	NU3092	IR460X519X163	0	3	460	680	163	519	206
	NU3192	IR460X529,5X240	1	3	460	760	240	529,5	455
	NU1292	IR460X554X165	2	1	460	830	165	554	415
	NU2292	IR460X554X212	2	2	460	830	212	554	530
480	**NU1896**	IR480X511X56	8	0	480	600	56	511	39,5
	NU2896	IR480X511X72	8	2	480	600	72	511	47,5
	NU1996	IR480X525X78	9	0	480	650	78	525	72,7
	NU2996	IR480X525X100	9	2	480	650	100	525	96,8
	NU1096	IR480X536X100	0	0	480	700	100	536	134
	NU2096	IR480X533X128	0	2	480	700	128	533	170
	NU3096	IR480X539X165	0	3	480	700	165	539	216
	NU3196	IR480X547X248	1	3	480	790	248	547	500
500	**NU18/500**	IR500X534X56	8	0	500	620	56	534	37,3
	NU28/500	IR500X530X72	8	2	500	620	72	530	50
	NU38/500	IR500X534X90	8	3	500	620	90	534	61,8
	NU19/500	IR500X546X78	9	0	500	670	78	546	78,5
	NU29/500	IR500X546X100	9	2	500	670	100	546	101
	NU39/500	IR500X544X128	9	3	500	670	128	544	130
	NU10/500	IR500X556X100	0	0	500	720	100	556	141
	NU20/500	IR500X553X128	0	2	500	720	128	553	180
	NU30/500	IR500X553X167	0	3	500	720	167	553	225
	NU31/500	IR500X576X264	1	3	500	830	264	576	595
	NU12/500	IR500X603X185	2	1	500	920	185	603	585
530	**NU28/530**	IR530X560,5X72	8	2	530	650	72	560,5	52
	NU19/530	IR530X575X82	9	0	530	710	82	575	86,9
	NU29/530	IR530X577X106	9	2	530	710	106	577	118
	NU10/530	IR530X589X112	0	0	530	780	112	589	190
	NU20/530	IR530X591X145	0	2	530	780	145	591	255
	NU30/530 E	IR530X589X185	0	3	530	780	185	589	309
	NU31/530	IR530X612X272	1	3	530	870	272	612	660
560	**NU18/560**	IR560X591X56	8	0	560	680	56	591	44,5
	NU19/560	IR560X613X85	9	0	560	750	85	613	105
	NU29/560	IR560X613X112	9	2	560	750	112	613	140
	NU10/560	IR560X630X115	0	0	560	820	115	630	210
	NU20/560	IR560X626X150	0	2	560	820	150	626	290

- warehouse - order - phone

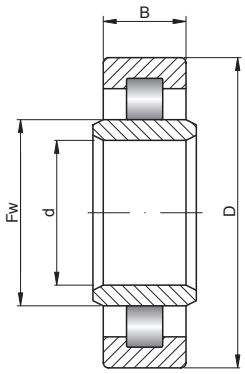

NUB..

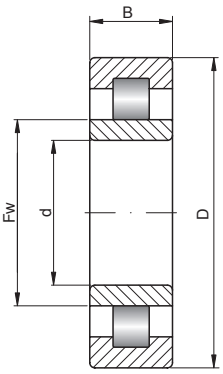

NUC..

Basic load ratings [kN]		Limiting speed [rpm]		Basic makes*									Bearing No.
dyn. C	stat. C_0	grease	oil	-	M	TV	C2	C3	C4	K	NUB	NUC	
2460	4750	900	1400	✓	✓	✓	✓	✓	✓	✓	✓	✓	**NU2084**
1380	4770	900	1400	✓	✓	✓	✓	✓	✓	✓	✓	✓	**NU3084**
4950	9000	750	1300	✓	✓	✓	✓	✓	✓	✓	✓	✓	**NU3184**
809	1900	1100	1500	✓	✓	✓	✓	✓	✓	✓	✓	✓	**NU2888**
1060	2000	1100	1400	✓	✓	✓	✓	✓	✓	✓	✓	✓	**NU1988**
1720	3600	1100	1400	✓	✓	✓	✓	✓	✓	✓	✓	✓	**NU2988**
1980	4250	900	1100	✓	✓	✓	✓	✓	✓	✓	✓	✓	**NU3988**
1490	2520	680	800	✓	✓	✓	✓	✓	✓	✓	✓	✓	**NU1088**
2550	4900	8500	1300	✓	✓	✓	✓	✓	✓	✓	✓	✓	**NU2088**
5120	9650	700	1200	✓	✓	✓	✓	✓	✓	✓	✓	✓	**NU3188**
1080	2400	1100	1400	✓	✓	✓	✓	✓	✓	✓	✓	✓	**NU2892**
1060	1990	1000	1350	✓	✓	✓	✓	✓	✓	✓	✓	✓	**NU1992**
1720	3600	1000	1300	✓	✓	✓	✓	✓	✓	✓	✓	✓	**NU2992**
1590	2730	630	750	✓	✓	✓	✓	✓	✓	✓	✓	✓	**NU1092**
2810	5400	800	1200	✓	✓	✓	✓	✓	✓	✓	✓	✓	**NU2092**
2960	6150	850	1300	✓	✓	✓	✓	✓	✓	✓	✓	✓	**NU3092**
5280	9650	670	1100	✓	✓	✓	✓	✓	✓	✓	✓	✓	**NU3192**
4180	6800	750	1100	✓	✓	✓	✓	✓	✓	✓	✓	✓	**NU1292**
5120	8650	700	1100	✓	✓	✓	✓	✓	✓	✓	✓	✓	**NU2292**
765	1630	1000	1300	✓	✓	✓	✓	✓	✓	✓	✓	✓	**NU1896**
1100	2450	1000	1300	✓	✓	✓	✓	✓	✓	✓	✓	✓	**NU2896**
1130	2200	950	1300	✓	✓	✓	✓	✓	✓	✓	✓	✓	**NU1996**
1600	3450	900	1200	✓	✓	✓	✓	✓	✓	✓	✓	✓	**NU2996**
1700	3100	600	700	✓	✓	✓	✓	✓	✓	✓	✓	✓	**NU1096**
2860	5600	750	1200	✓	✓	✓	✓	✓	✓	✓	✓	✓	**NU2096**
3030	6410	800	1200	✓	✓	✓	✓	✓	✓	✓	✓	✓	**NU3096**
5940	10800	630	1100	✓	✓	✓	✓	✓	✓	✓	✓	✓	**NU3196**
705	1560	900	1200	✓	✓	✓	✓	✓	✓	✓	✓	✓	**NU18/500**
1170	2700	950	1300	✓	✓	✓	✓	✓	✓	✓	✓	✓	**NU28/500**
1210	3140	800	1000	✓	✓	✓	✓	✓	✓	✓	✓	✓	**NU38/500**
1480	3160	900	1250	✓	✓	✓	✓	✓	✓	✓	✓	✓	**NU19/500**
1940	4500	860	1100	✓	✓	✓	✓	✓	✓	✓	✓	✓	**NU29/500**
2330	5200	800	1200	✓	✓	✓	✓	✓	✓	✓	✓	✓	**NU39/500**
2270	4440	570	650	✓	✓	✓	✓	✓	✓	✓	✓	✓	**NU10/500**
2920	5850	750	1100	✓	✓	✓	✓	✓	✓	✓	✓	✓	**NU20/500**
4020	8000	750	1100	✓	✓	✓	✓	✓	✓	✓	✓	✓	**NU30/500**
6440	12000	600	1000	✓	✓	✓	✓	✓	✓	✓	✓	✓	**NU31/500**
5280	8500	670	950	✓	✓	✓	✓	✓	✓	✓	✓	✓	**NU12/500**
1170	2750	900	1200	✓	✓	✓	✓	✓	✓	✓	✓	✓	**NU28/530**
1320	2560	870	1190	✓	✓	✓	✓	✓	✓	✓	✓	✓	**NU19/530**
2160	4850	830	1050	✓	✓	✓	✓	✓	✓	✓	✓	✓	**NU29/530**
2290	4050	800	1000	✓	✓	✓	✓	✓	✓	✓	✓	✓	**NU10/530**
3740	7350	670	1000	✓	✓	✓	✓	✓	✓	✓	✓	✓	**NU20/530**
4740	10100	700	1000	✓	✓	✓	✓	✓	✓	✓	✓	✓	**NU30/530 E**
7480	14600	560	950	✓	✓	✓	✓	✓	✓	✓	✓	✓	**NU31/530**
809	1830	850	1100	✓	✓	✓	✓	✓	✓	✓	✓	✓	**NU18/560**
1600	3260	830	1100	✓	✓	✓	✓	✓	✓	✓	✓	✓	**NU19/560**
2040	4480	780	1000	✓	✓	✓	✓	✓	✓	✓	✓	✓	**NU29/560**
2890	5630	540	600	✓	✓	✓	✓	✓	✓	✓	✓	✓	**NU10/560**
3800	7650	630	1000	✓	✓	✓	✓	✓	✓	✓	✓	✓	**NU20/560**

* Other products also available



https://nppnovoteh.com

5. CYLINDRICAL ROLLER BEARINGS

5.1. Single-row cylindrical roller bearings - types – NU, NUB, NUC



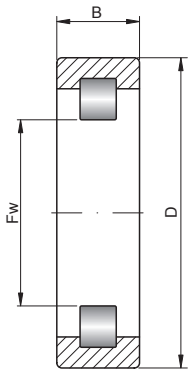

RNU..

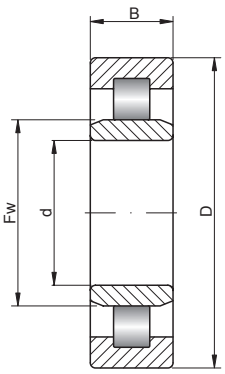

NU..

560 – 1000 mm

Shaft [mm]	Bearing No.	Inner ring IR	Series		Dimensions [mm]				Weight [kg]
			SD	SB	d	D	B	Fw	
560 cont.	**NU31/560**	IR560X648X280	1	3	560	920	280	648	745
	NU12/560	IR560X668X206	2	1	560	1030	206	668	805
600	**NU18/600**	IR600X632X60	8	0	600	730	60	632	50,5
	NU28/600	IR600X632X78	8	2	600	730	78	632	70
	NU19/600	IR600X652X90	9	0	600	800	90	652	126
	NU29/600	IR600X649X118	9	2	600	800	118	649	165
	NU10/600	IR600X661X118	0	0	600	870	118	661	245
	NU20/600	IR600X661X155	0	2	600	870	155	661	325
	NU30/600	IR600X661X200	0	3	600	870	200	661	415
	NU2/600	IR600X749X155	2	0	600	1090	155	749	710
630	**NU18/630**	IR630X667X69	8	0	630	780	69	667	75
	NU28/630	IR630X671X88	8	2	630	780	88	671	91,8
	NU19/630	IR630X689X100	9	0	630	850	100	689	165
	NU29/630	IR630X689X128	9	2	630	850	128	689	210
	NU10/630	IR630X699X128	0	0	630	920	128	699	285
	NU20/630	IR630X699X170	0	2	630	920	170	699	400
	NU30/630	IR630X699X212	0	3	630	920	212	699	490
	NU12/630	IR630X751X230	2	1	630	1150	230	751	1100
670	**NU18/670**	IR670X708X69	8	0	670	820	69	708	76,6
	NU19/670	IR670X728X103	9	0	670	900	103	728	195
	NU10/670	IR670X747X136	0	0	670	980	136	747	350
	NU20/670	IR670X747X180	0	2	670	980	180	747	480
	NU30/670	IR670X747X230	0	3	670	980	230	747	600
710	**NU18/710**	IR710X751X74	8	0	710	870	74	751	95,4
	NU19/710	IR710X774X106	9	0	710	950	106	774	215
	NU29/710	IR710X774X140	9	2	710	950	140	774	279
	NU10/710	IR710X778X140	0	0	710	1030	140	778	415
	NU20/710	IR710X778X185	0	2	710	1030	185	778	540
750	**NU18/750**	IR750X794X78	8	0	750	920	78	794	115
	NU10/750	IR750X830X150	0	0	750	1090	150	830	490
	NU20/750	IR750X830X195	0	2	750	1090	195	830	635
800	**NU18/800**	IR800X846X82	8	0	800	980	82	846	145
	NU10/800	IR800X890X155	0	0	800	1150	155	890	545
	NU20/800	IR800X882X200	0	2	800	1150	200	882	715
850	**NU28/850**	IR850X900X106	8	2	850	1030	106	900	175
	NU19/850	IR850X917X118	9	0	850	1120	118	917	310
900	**NU18/900**	IR900X949X85	8	0	900	1090	85	949	170
	NU28/900	IR900X949X112	8	2	900	1090	112	949	235
	NU19/900	IR900X969X122	9	0	900	1180	122	969	380
	NU29/900	IR900X969X165	9	2	900	1180	165	969	560
950	**NU38/950**	IR950X1002X150	8	3	950	1150	150	1002	312
	NU29/950	IR950X1024X175	9	2	950	1250	175	1024	745
1000	**NU18/1000**	IR1000X1053X100	8	0	1000	1220	100	1053	265
	NU28/1000	IR1000X1053X128	8	2	1000	1220	128	1053	345
	NU29/1000	IR1000X1082X185	9	2	1000	1320	185	1082	700

- warehouse - order - phone

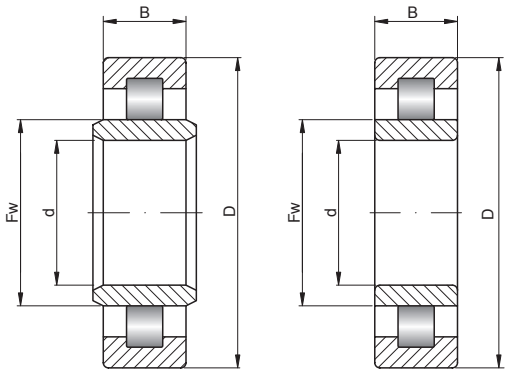

NUB.. NUC..

Basic load ratings [kN]		Limiting speed [rpm]		Basic makes*									Bearing No.
dyn. C	stat. C_0	grease	oil	-	M	TV	C2	C3	C4	K	NUB	NUC	
7420	15100	540	900	✓	✓	✓	✓	✓	✓	✓	✓	✓	**NU31/560**
7210	11200	560	800	✓	✓	✓	✓	✓	✓	✓	✓	✓	**NU12/560**
897	2040	800	1000	✓	✓	✓	✓	✓	✓	✓	✓	✓	**NU18/600**
1320	3450	750	1000	✓	✓	✓	✓	✓	✓	✓	✓	✓	**NU28/600**
1980	4170	800	1050	✓	✓	✓	✓	✓	✓	✓	✓	✓	**NU19/600**
2920	6550	750	950	✓	✓	✓	✓	✓	✓	✓	✓	✓	**NU29/600**
2750	5100	700	900	✓	✓	✓	✓	✓	✓	✓	✓	✓	**NU10/600**
4180	8000	600	900	✓	✓	✓	✓	✓	✓	✓	✓	✓	**NU20/600**
5390	11000	600	900	✓	✓	✓	✓	✓	✓	✓	✓	✓	**NU30/600**
5610	9800	480	850	✓	✓	✓	✓	✓	✓	✓	✓	✓	**NU2/600**
1100	2500	800	1000	✓	✓	✓	✓	✓	✓	✓	✓	✓	**NU18/630**
1510	3690	650	850	✓	✓	✓	✓	✓	✓	✓	✓	✓	**NU28/630**
2450	5240	700	950	✓	✓	✓	✓	✓	✓	✓	✓	✓	**NU19/630**
3100	7080	680	850	✓	✓	✓	✓	✓	✓	✓	✓	✓	**NU29/630**
3410	6200	630	850	✓	✓	✓	✓	✓	✓	✓	✓	✓	**NU10/630**
4730	9500	560	850	✓	✓	✓	✓	✓	✓	✓	✓	✓	**NU20/630**
6440	14300	530	850	✓	✓	✓	✓	✓	✓	✓	✓	✓	**NU30/630**
8580	13700	450	700	✓	✓	✓	✓	✓	✓	✓	✓	✓	**NU12/630**
1530	3750	750	950	✓	✓	✓	✓	✓	✓	✓	✓	✓	**NU18/670**
2330	4750	630	850	✓	✓	✓	✓	✓	✓	✓	✓	✓	**NU19/670**
3740	6800	600	800	✓	✓	✓	✓	✓	✓	✓	✓	✓	**NU10/670**
5390	11000	500	800	✓	✓	✓	✓	✓	✓	✓	✓	✓	**NU20/670**
6600	14000	500	800	✓	✓	✓	✓	✓	✓	✓	✓	✓	**NU30/670**
1750	4400	700	900	✓	✓	✓	✓	✓	✓	✓	✓	✓	**NU18/710**
2910	6370	570	760	✓	✓	✓	✓	✓	✓	✓	✓	✓	**NU19/710**
3650	8530	600	800	✓	✓	✓	✓	✓	✓	✓	✓	✓	**NU29/710**
4680	8500	560	750	✓	✓	✓	✓	✓	✓	✓	✓	✓	**NU10/710**
5940	12000	480	700	✓	✓	✓	✓	✓	✓	✓	✓	✓	**NU20/710**
1470	3450	600	800	✓	✓	✓	✓	✓	✓	✓	✓	✓	**NU18/750**
4730	8800	430	670	✓	✓	✓	✓	✓	✓	✓	✓	✓	**NU10/750**
7040	14600	430	670	✓	✓	✓	✓	✓	✓	✓	✓	✓	**NU20/750**
1720	4150	530	700	✓	✓	✓	✓	✓	✓	✓	✓	✓	**NU18/800**
5180	10900	510	550	✓	✓	✓	✓	✓	✓	✓	✓	✓	**NU10/800**
7040	14600	400	630	✓	✓	✓	✓	✓	✓	✓	✓	✓	**NU20/800**
2120	5960	500	700	✓	✓	✓	✓	✓	✓	✓	✓	✓	**NU28/850**
3630	8190	500	650	✓	✓	✓	✓	✓	✓	✓	✓	✓	**NU19/850**
1980	4900	450	600	✓	✓	✓	✓	✓	✓	✓	✓	✓	**NU18/900**
2700	7200	450	600	✓	✓	✓	✓	✓	✓	✓	✓	✓	**NU28/900**
4130	8800	430	560	✓	✓	✓	✓	✓	✓	✓	✓	✓	**NU19/900**
5830	14000	430	560	✓	✓	✓	✓	✓	✓	✓	✓	✓	**NU29/900**
4030	12100	400	600	✓	✓	✓	✓	✓	✓	✓	✓	✓	**NU38/950**
5830	14000	400	530	✓	✓	✓	✓	✓	✓	✓	✓	✓	**NU29/950**
2640	6550	400	530	✓	✓	✓	✓	✓	✓	✓	✓	✓	**NU18/1000**
3690	10000	400	530	✓	✓	✓	✓	✓	✓	✓	✓	✓	**NU28/1000**
7040	17300	360	480	✓	✓	✓	✓	✓	✓	✓	✓	✓	**NU29/1000**



* Other products also available

https://nppnovoteh.com

5. CYLINDRICAL ROLLER BEARINGS

5.1. Single-row cylindrical roller bearings - types – NU, NUB, NUC



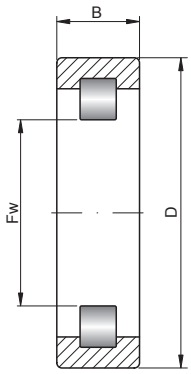

RNU..

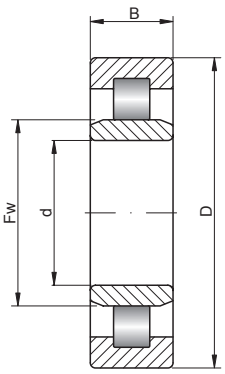

NU..

1060– 1700 mm

Shaft [mm]	Bearing No.	Inner ring IR	Series		Dimensions [mm]				Weight [kg]
			SD	SB	d	D	B	Fw	
1060	**NU29/1060**	IR1060X1146X195	9	2	1060	1400	195	1146	870
	NU39/1060	IR1060X1146X250	9	3	1060	1400	250	1146	1070
1120	**NU18/1120**	IR1120X1182X106	8	0	1120	1360	106	1182	335
	NU30/1120	IR1120X1231X345	0	3	1120	1580	345	1231	2150
1180	**NU18/1180**	IR1180X1242X106	8	0	1180	1420	106	1242	350
	NU29/1180	IR1180X1258X206	9	2	1180	1540	206	1258	1090
1320	**NU18/1320**	IR1320X1395X122	8	0	1320	1600	122	1395	530
	NU29/1320	IR1320X1420X230	9	2	1320	1720	230	1420	1500
1600	**NU18/1600**	IR1600X1694X155	8	0	1600	1950	155	1694	986
1700	**NU18/1700**	IR1700X1784X160	8	0	1700	2060	160	1784	1150

- warehouse - order - phone

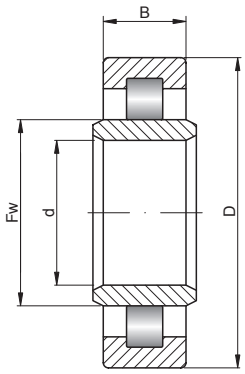

NUB..

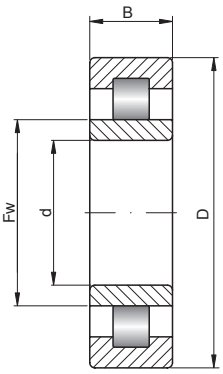

NUC..

Basic load ratings [kN]		Limiting speed [rpm]		Basic makes*									Bearing No.
dyn. C	stat. C_0	grease	oil	-	M	TV	C2	C3	C4	K	NUB	NUC	
7210	17300	280	340	✓	✓	✓	✓	✓	✓	✓	✓	✓	**NU29/1060**
9130	24000	260	320	✓	✓	✓	✓	✓	✓	✓	✓	✓	**NU39/1060**
3410	8650	280	340	✓	✓	✓	✓	✓	✓	✓	✓	✓	**NU18/1120**
15700	39000	190	240	✓	✓	✓	✓	✓	✓	✓	✓	✓	**NU30/1120**
3030	7800	260	320	✓	✓	✓	✓	✓	✓	✓	✓	✓	**NU18/1180**
8970	21600	190	240	✓	✓	✓	✓	✓	✓	✓	✓	✓	**NU29/1180**
3800	10000	260	340	✓	✓	✓	✓	✓	✓	✓	✓	✓	**NU18/1320**
11400	30500	240	320	✓	✓	✓	✓	✓	✓	✓	✓	✓	**NU29/1320**
7060	20100	200	240	✓	✓	✓	✓	✓	✓	✓	✓	✓	**NU18/1600**
7210	19300	160	200	✓	✓	✓	✓	✓	✓	✓	✓	✓	**NU18/1700**

* Other products also available



https://nppnovoteh.com

5. CYLINDRICAL ROLLER BEARINGS

5.2. Single-row cylindrical roller bearings - types - NJ, NJP



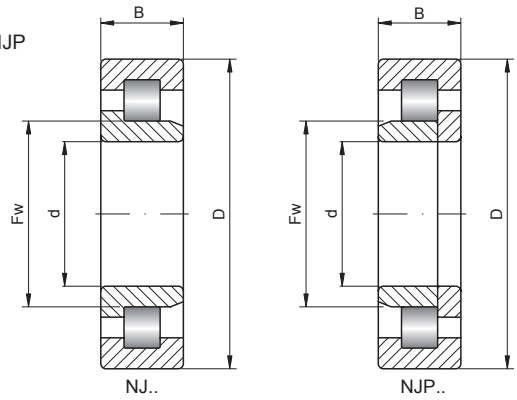

15 – 45 mm

Shaft [mm]	Bearing No.	Series		Dimensions [mm]				Weight [kg]	Basic load ratings [kN]	
		SD	SB	d	D	B	Fw		dyn. C	stat. C_0
15	**NJ202 E**	2	0	15	35	11	19,3	0,049	12,7	10,4
	NJ302 E	3	0	15	42	13	21	0,09	19,4	15,3
17	**NJ203 E**	2	0	17	40	12	22,1	0,071	17,6	14,6
	NJ2203 E	2	2	17	40	16	22,1	0,094	24	22
	NJ303 E	3	0	17	47	14	24,2	0,123	25,5	21,2
20	**NJ204 E**	2	0	20	47	14	26,5	0,115	25,7	22,6
	NJ2204 E	2	2	20	47	18	26,5	0,15	30,6	28,3
	NJ304 E	3	0	20	52	15	27,5	0,157	31,5	26,9
	NJ2304 E	3	2	20	52	21	27,5	0,221	42	38,8
25	**NJ1005**	0	0	25	47	12	30,5	0,086	14,3	13,1
	NJ205 E	2	0	25	52	15	31,5	0,142	29,3	27,7
	NJ2205 E	2	2	25	52	18	31,5	0,17	34,9	34,6
	NJ305 E	3	0	25	62	17	34	0,249	41,6	37,4
	NJ2305 E	3	2	25	62	24	34	0,359	57	56,1
30	**NJ1006**	0	0	30	55	13	36,5	0,124	18,7	18,4
	NJ206 E	2	0	30	62	16	37,5	0,214	39,1	37,4
	NJ2206 E	2	2	30	62	20	37,5	0,269	48,9	49,8
	NJ3206	2	3	30	62	23,8	38,5	0,352	42,7	46,4
	NJ306 E	3	0	30	72	19	40,5	0,37	53,1	50,2
	NJ2306 E	3	2	30	72	27	40,5	0,548	74,6	77,6
	NJ3306	3	3	30	72	30,2	42	0,667	69,1	74,3
	NJ406	4	0	30	90	23	45	0,773	62,8	55
35	**NJ1007**	0	0	35	62	14	42	0,187	22,6	23,2
	NJ207 E	2	0	35	72	17	44	0,314	50,2	50,2
	NJ2207 E	2	2	35	72	23	44	0,415	61,6	65,3
	NJ3207	2	3	35	72	27	43,8	0,538	54,8	59,1
	NJ307 E	3	0	35	80	21	46,2	0,495	66,6	65,4
	NJ2307 E	3	2	35	80	31	46,2	0,748	93,1	101
	NJ3307	3	3	35	80	34,9	46,2	0,932	81,7	89,1
	NJ407	4	0	35	100	25	53	1,047	75,2	68,9
40	**NJ1008**	0	0	40	68	15	47	0,229	24,9	25,7
	NJ208 E	2	0	40	80	18	49,5	0,394	55,7	55,4
	NJ2208 E	2	2	40	80	23	49,5	0,503	72,3	77,6
	NJ5208	2	5	40	80	30,16	49,3	0,757	57	98,1
	NJ3208	2	3	40	80	30,2	50	0,73	78,3	90,6
	NJ308 E	3	0	40	90	23	52	0,681	83,1	81,5
	NJ2308 E	3	2	40	90	33	52	0,987	114	122
	NJ3308	3	3	40	90	36,5	53,5	1,221	104	119
	NJ408	4	0	40	110	27	58	1,334	97,1	89,1
45	**NJ1009**	0	0	45	75	16	52,5	0,297	31	33,8
	NJ2009	0	2	45	75	19	52,5	0,349	52,8	64
	NJ209 E	2	0	45	85	19	54,5	0,451	63,1	66,4
	NJ2209 E	2	2	45	85	23	54,5	0,55	76,1	84,6
	NJ5209	2	5	45	85	30,16	55,5	0,818	89,1	117,7
	NJ3209	2	3	45	85	30,2	55	0,79	82,4	99
	NJ309 E	3	0	45	100	25	58,5	0,933	97,4	98,3
	NJ2309 E	3	2	45	100	36	58,5	1,355	137	153
	NJ3309	3	3	45	100	39,7	58,5	1,632	131	149
	NJ409	4	0	45	120	29	64,5	1,683	115	112

- warehouse - order - phone

Limiting speed [rpm]		Basic makes*								Bearing No.
grease	oil	-	M	TV	C2	C3	C4	K	NJP	
19000	22000	●	○	○	○	◴	◴	○	○	**NJ202 E**
16000	19000	●	○	○	○	◴	◴	○	○	**NJ302 E**
17000	20000	●	○	○	○	◴	◴	○	○	**NJ203 E**
16000	18500	●	○	○	○	◴	◴	○	○	**NJ2203 E**
14000	17000	●	○	○	○	◴	◴	○	○	**NJ303 E**
15000	18000	●	○	○	○	◴	◴	○	○	**NJ204 E**
13000	18000	●	○	○	○	◴	◴	○	○	**NJ2204 E**
12000	16000	●	○	○	○	◴	◴	○	○	**NJ304 E**
11000	16000	●	○	○	○	◴	◴	○	○	**NJ2304 E**
15000	18000	◴	○	○	○	◴	◴	○	○	**NJ1005**
13000	15000	●	○	○	○	◴	◴	○	○	**NJ205 E**
12000	15000	●	○	○	○	◴	◴	○	○	**NJ2205 E**
10000	14000	●	○	○	○	◴	◴	○	○	**NJ305 E**
9100	14000	●	○	○	○	◴	◴	○	○	**NJ2305 E**
13000	15000	◴	○	○	○	◴	◴	○	○	**NJ1006**
11000	13000	●	○	○	○	◴	◴	○	○	**NJ206 E**
9700	13000	●	○	○	○	◴	◴	○	○	**NJ2206 E**
8700	13000	○	○	○	○	○	○	○	○	**NJ3206**
8700	12000	●	○	○	○	◴	◴	○	○	**NJ306 E**
7800	12000	●	○	○	○	◴	◴	○	○	**NJ2306 E**
7700	12000	○	○	○	○	○	○	○	○	**NJ3306**
7600	10000	●	◴	○	○	◴	◴	○	○	**NJ406**
11000	13000	◴	○	○	○	◴	◴	○	○	**NJ1007**
9300	11000	●	○	○	○	◴	◴	○	○	**NJ207 E**
8300	11000	●	○	○	○	◴	◴	○	○	**NJ2207 E**
7600	11000	○	○	○	○	○	○	○	○	**NJ3207**
7700	10000	●	○	○	○	◴	◴	○	○	**NJ307 E**
6900	10000	●	○	○	○	◴	◴	○	○	**NJ2307 E**
7000	10000	○	○	○	○	○	○	○	○	**NJ3307**
6600	8800	●	◴	○	○	◴	◴	○	○	**NJ407**
10000	12000	◴	○	○	○	◴	◴	○	○	**NJ1008**
8300	9900	●	○	○	○	◴	◴	○	○	**NJ208 E**
7400	9900	●	○	○	○	◴	◴	○	○	**NJ2208 E**
7500	8900	○	○	○	○	○	○	○	○	**NJ5208**
6700	10000	○	○	○	○	○	○	○	○	**NJ3208**
6800	9100	●	○	○	○	◴	◴	○	○	**NJ308 E**
6100	9100	●	○	○	○	◴	◴	○	○	**NJ2308 E**
6100	9100	○	○	○	○	○	○	○	○	**NJ3308**
6000	8000	●	◴	○	○	◴	◴	○	○	**NJ408**
9200	11000	◴	○	○	○	◴	◴	○	○	**NJ1009**
9000	11000	○	○	○	○	○	○	○	○	**NJ2009**
7600	9200	●	○	○	○	◴	◴	○	○	**NJ209 E**
6900	9200	●	○	○	○	◴	◴	○	○	**NJ2209 E**
6700	7900	○	○	○	○	○	○	○	○	**NJ5209**
6100	9200	○	○	○	○	○	○	○	○	**NJ3209**
6100	8200	●	○	○	○	◴	◴	○	○	**NJ309 E**
5400	8200	●	○	○	○	◴	◴	○	○	**NJ2309 E**
5500	8300	○	○	○	○	○	○	○	○	**NJ3309**
5400	7200	●	◴	○	○	◴	◴	○	○	**NJ409**

* Other products also available

https://nppnovoteh.com

5. CYLINDRICAL ROLLER BEARINGS

5.2. Single-row cylindrical roller bearings - types - NJ, NJP



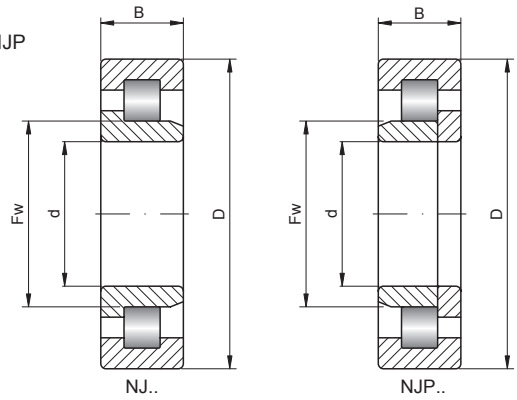

50 – 75 mm

Shaft [mm]	Bearing No.	Series		Dimensions [mm]				Weight [kg]	Basic load ratings [kN]	
		SD	SB	d	D	B	Fw		dyn. C	stat. C_0
50	**NJ1010**	0	0	50	80	16	57,5	0,314	33,6	36,8
	NJ210 E	2	0	50	90	20	59,5	0,51	66,1	71,9
	NJ2210 E	2	2	50	90	23	59,5	0,595	79,7	91,5
	NJ5210	2	5	50	90	30,16	60,4	0,9	92,6	128
	NJ3210	2	3	50	90	30,2	60,4	0,851	86,2	108
	NJ310 E	3	0	50	110	27	65	1,18	110	113
	NJ2310 E	3	2	50	110	40	65	1,806	163	187
	NJ3310	3	3	50	110	44,4	65	2,196	156	183
	NJ410	4	0	50	130	31	70,8	2,063	139	136
55	**NJ1011**	0	0	55	90	18	64,5	0,457	37,4	43,8
	NJ211 E	2	0	55	100	21	66	0,667	86,4	98,7
	NJ2211 E	2	2	55	100	25	66	0,827	101	122
	NJ3211	2	3	55	100	33,3	66,5	1,17	95,5	118
	NJ5211	2	5	55	100	33,34	66,9	1,232	119	171
	NJ311 E	3	0	55	120	29	70,5	1,539	137	143
	NJ2311 E	3	2	55	120	43	70,5	2,309	201	233
	NJ3311	3	3	55	120	49,2	70,5	2,884	188	220
	NJ411	4	0	55	140	33	77,2	2,576	142	138
60	**NJ1012**	0	0	60	95	18	69,5	0,49	42,1	50
	NJ212 E	2	0	60	110	22	72	0,852	97,7	107
	NJ2212 E	2	2	60	110	28	72	1,119	131	157
	NJ3212	2	3	60	110	36,5	73,5	1,56	128	167
	NJ5212	2	5	60	110	36,5	72,3	1,632	150	211
	NJ312 E	3	0	60	130	31	77	1,919	150	157
	NJ2312 E	3	2	60	130	46	77	2,884	223	262
	NJ3312	3	3	60	130	54	77	3,705	220	265
	NJ412	4	0	60	150	35	83	3,099	178	184
65	**NJ1013**	0	0	65	100	18	74,5	0,519	43,3	52,9
	NJ3013	0	3	65	100	26	74,5	0,72	105	146
	NJ213 E	2	0	65	120	23	78,5	1,078	108	119
	NJ2213 E	2	2	65	120	31	78,5	1,488	149	181
	NJ3213	2	3	65	120	38,1	79,6	1,95	148	197
	NJ5213	2	5	65	120	38,1	80,4	1,929	139	196
	NJ313 E	3	0	65	140	33	82,5	2,371	181	191
	NJ2313 E	3	2	65	140	48	82,5	3,45	251	287
	NJ3313	3	3	65	140	58,7	83,5	4,65	241	294
	NJ413	4	0	65	160	37	89,3	3,67	198	203
70	**NJ1014**	0	0	70	110	20	80	0,72	57,9	70,4
	NJ214 E	2	0	70	125	24	83,5	1,19	119	137
	NJ2214 E	2	2	70	125	31	83,5	1,57	156	194
	NJ5214	2	5	70	125	39,69	84,8	2,28	178	261
	NJ3214	2	3	70	125	39,7	84,5	2,14	147	198
	NJ314 E	3	0	70	150	35	89	2,88	205	222
	NJ2314 E	3	2	70	150	51	89	4,19	275	323
	NJ3314	3	3	70	150	63,5	90	5,77	283	356
	NJ414	4	0	70	180	42	100	5,4	246	257
75	**NJ1015**	0	0	75	115	20	85	0,75	63,6	78,1
	NJ215 E	2	0	75	130	25	88,5	1,32	130	156
	NJ2215 E	2	2	75	130	31	88,5	1,65	162	207
	NJ5215	2	5	75	130	41,28	89	2,47	196	299
	NJ3215	2	3	75	130	41,3	88,5	2,34	167	226

- warehouse - order - phone

Limiting speed [rpm]		Basic makes*								Bearing No.
grease	oil	-	M	TV	C2	C3	C4	K	NJP	
8400	9900	◴	◝	◝	◝	◴	◴	◝	◝	**NJ1010**
7100	8500	◓	◝	◝	◝	◴	◴	◝	◝	**NJ210 E**
6400	8500	◓	◝	◝	◝	◴	◴	◝	◝	**NJ2210 E**
6300	7500	◝	◝	◝	◝	◝	◝	◝	◝	**NJ5210**
5700	8500	◝	◝	◝	◝	◝	◝	◝	◝	**NJ3210**
5500	7400	◓	◝	◝	◝	◴	◴	◝	◝	**NJ310 E**
4900	7400	◓	◝	◝	◝	◴	◴	◝	◝	**NJ2310 E**
5000	7500	◝	◝	◝	◝	◝	◝	◝	◝	**NJ3310**
4900	6600	◓	◴	◝	◝	◴	◴	◝	◝	**NJ410**
7600	8900	◴	◝	◝	◝	◴	◴	◝	◝	**NJ1011**
6400	7700	◓	◝	◝	◝	◴	◴	◝	◝	**NJ211 E**
5800	7700	◓	◝	◝	◝	◴	◴	◝	◝	**NJ2211 E**
5100	7700	◝	◝	◝	◝	◝	◝	◝	◝	**NJ3211**
5600	6700	◝	◝	◝	◝	◝	◝	◝	◝	**NJ5211**
5100	6700	◓	◝	◝	◝	◴	◴	◝	◝	**NJ311 E**
4500	6700	◓	◝	◝	◝	◴	◴	◝	◝	**NJ2311 E**
4500	6800	◝	◝	◝	◝	◝	◝	◝	◝	**NJ3311**
4600	6100	◓	◴	◝	◝	◴	◴	◝	◝	**NJ411**
7000	8300	◴	◝	◝	◝	◴	◴	◝	◝	**NJ1012**
5800	6900	◓	◝	◝	◝	◴	◴	◝	◝	**NJ212 E**
5200	6900	◓	◝	◝	◝	◴	◴	◝	◝	**NJ2212 E**
4700	7000	◝	◝	◝	◝	◝	◝	◝	◝	**NJ3212**
5300	6300	◝	◝	◝	◝	◝	◝	◝	◝	**NJ5212**
4600	6200	◓	◝	◝	◝	◴	◴	◝	◝	**NJ312 E**
4100	6200	◓	◴	◝	◝	◴	◴	◝	◝	**NJ2312 E**
4200	6300	◝	◝	◝	◝	◝	◝	◝	◝	**NJ3312**
4200	5700	◓	◴	◝	◝	◴	◴	◝	◝	**NJ412**
6600	7800	◴	◝	◝	◝	◴	◴	◝	◝	**NJ1013**
6300	7500	◝	◝	◝	◝	◝	◝	◝	◝	**NJ3013**
5300	6400	◓	◝	◝	◝	◴	◴	◝	◝	**NJ213 E**
4800	6400	◓	◴	◝	◝	◴	◴	◝	◝	**NJ2213 E**
4300	6400	◝	◝	◝	◝	◝	◝	◝	◝	**NJ3213**
4700	5600	◝	◝	◝	◝	◝	◝	◝	◝	**NJ5213**
4300	5700	◓	◝	◝	◝	◴	◴	◝	◝	**NJ313 E**
3800	5700	◓	◴	◝	◝	◴	◴	◝	◝	**NJ2313 E**
3900	5800	◝	◝	◝	◝	◝	◝	◝	◝	**NJ3313**
4000	5300	◓	◴	◝	◝	◴	◴	◝	◝	**NJ413**
6100	7200	◴	◝	◝	◝	◴	◴	◝	◝	**NJ1014**
5000	6000	◓	◝	◝	◝	◴	◴	◝	◝	**NJ214 E**
4500	6000	◓	◴	◝	◝	◴	◴	◝	◝	**NJ2214 E**
4700	5600	◝	◝	◝	◝	◝	◝	◝	◝	**NJ5214**
4100	6100	◝	◝	◝	◝	◝	◝	◝	◝	**NJ3214**
4000	5300	◓	◴	◝	◝	◴	◴	◝	◝	**NJ314 E**
3600	5300	◓	◴	◝	◝	◴	◴	◝	◝	**NJ2314 E**
3600	5400	◝	◝	◝	◝	◝	◝	◝	◝	**NJ3314**
3500	4700	◓	◴	◝	◝	◴	◴	◝	◝	**NJ414**
5700	6800	◴	◴	◝	◝	◴	◴	◝	◝	**NJ1015**
4800	5700	◓	◴	◝	◝	◴	◴	◝	◝	**NJ215 E**
4300	5700	◓	◴	◝	◝	◴	◴	◝	◝	**NJ2215 E**
4500	5300	◝	◝	◝	◝	◝	◝	◝	◝	**NJ5215**
3900	5800	◝	◝	◝	◝	◝	◝	◝	◝	**NJ3215**

* Other products also available



https://nppnovoteh.com

5. CYLINDRICAL ROLLER BEARINGS

5.2. Single-row cylindrical roller bearings - types - NJ, NJP



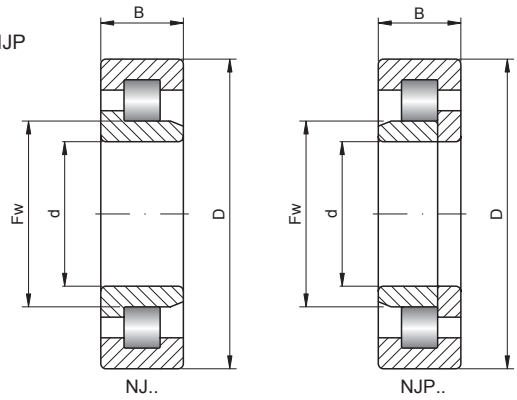

75 – 100 mm

Shaft [mm]	Bearing No.	Series		Dimensions [mm]				Weight [kg]	Basic load ratings [kN]	
		SD	SB	d	D	B	Fw		dyn. C	stat. C_0
75 cont.	**NJ315 E**	3	0	75	160	37	95	3,46	240	263
	NJ2315 E	3	2	75	160	55	95	5,13	329	395
	NJ3315	3	3	75	160	68,3	95,5	7,04	338	430
	NJ415	4	0	75	190	45	104,5	6,41	265	274
80	**NJ1016**	0	0	80	125	22	91,5	1,02	69,3	86,4
	NJ216 E	2	0	80	140	26	95,3	1,6	139	167
	NJ2216 E	2	2	80	140	33	95,3	2,08	186	243
	NJ3216	2	3	80	140	44,4	95,3	2,95	190	259
	NJ5216	2	5	80	140	44,45	95,2	2,99	185	282
	NJ316 E	3	0	80	170	39	101	4,11	259	282
	NJ2316 E	3	2	80	170	58	101	6,11	361	431
	NJ3316	3	3	80	170	68,3	103	7,92	338	436
	NJ416	4	0	80	200	48	110	7,47	302	315
85	**NJ1017**	0	0	85	130	22	96,5	1,07	71,4	91,2
	NJ217 E	2	0	85	150	28	100,5	1,99	167	199
	NJ2217 E	2	2	85	150	36	100,5	2,6	218	279
	NJ3217	2	3	85	150	49,2	101,8	3,77	215	296
	NJ5217	2	5	85	150	49,21	102	3,79	211	316
	NJ317 E	3	0	85	180	41	108	4,93	291	330
	NJ2317 E	3	2	85	180	60	108	7,16	394	485
	NJ3317	3	3	85	180	73	108	9,47	399	517
	NJ417	4	0	85	210	52	113	8,91	340	350
90	**NJ1018**	0	0	90	140	24	103	1,38	84,7	109
	NJ218 E	2	0	90	160	30	107	2,44	182	217
	NJ2218 E	2	2	90	160	40	107	3,29	242	314
	NJ3218	2	3	90	160	52,4	107	4,61	270	373
	NJ5218	2	5	90	160	52,4	107,2	4,6	237	355
	NJ318 E	3	0	90	190	43	113,5	5,61	316	355
	NJ2318 E	3	2	90	190	64	113,5	8,33	437	534
	NJ3318	3	3	90	190	73	115	10,57	428	559
	NJ418	4	0	90	225	54	123,5	10,57	374	400
95	**NJ1019**	0	0	95	145	24	108	1,44	87,2	115
	NJ219 E	2	0	95	170	32	112,5	3	221	265
	NJ2219 E	2	2	95	170	43	112,5	4,03	287	371
	NJ5219	2	5	95	170	55,56	113,5	5,8	335	511
	NJ3219	2	3	95	170	55,6	113,5	5,56	297	412
	NJ319 E	3	0	95	200	45	121,5	6,59	334	387
	NJ2319 E	3	2	95	200	67	121,5	9,64	394	496
	NJ3319	3	3	95	200	77,8	121,5	12,42	487	654
	NJ419	4	0	95	240	55	133,5	13,96	410	444
100	**NJ1920**	9	0	100	140	20	110	0,94	67,7	94,4
	NJ1020	0	0	100	150	24	113	1,5	91	120
	NJ220 E	2	0	100	180	34	119	3,61	250	306
	NJ2220 E	2	2	100	180	46	119	4,95	334	444
	NJ3220	2	3	100	180	60,3	120	6,79	327	459
	NJ100X180X60,3	-	-	100	180	60,3	-	6	350	450
	NJ5220	2	5	100	180	60,32	121	6,66	304	473
	NJ320 E	3	0	100	215	47	127,5	7,95	379	424
	NJ2320 E	3	2	100	215	73	127,5	12,42	570	717
	NJ3320	3	3	100	215	82,6	129,5	15,39	530	706
	NJ420	4	0	100	250	58	139	14,37	458	498

- warehouse - order - phone

Limiting speed [rpm]		Basic makes*								Bearing No.
grease	oil	-	M	TV	C2	C3	C4	K	NJP	
3700	5000	●	◴	◥	◥	◴	◴	◥	◥	**NJ315 E**
3300	5000	●	◴	◥	◥	◴	◴	◥	◥	**NJ2315 E**
3400	5000	◥	◥	◥	◥	◥	◥	◥	◥	**NJ3315**
3300	4400	●	◴	◥	◥	◴	◴	◥	◥	**NJ415**
5300	6300	◴	◴	◥	◥	◴	◴	◥	◥	**NJ1016**
4400	5300	●	◴	◥	◥	◴	◴	◥	◥	**NJ216 E**
4000	5300	●	◴	◥	◥	◴	◴	◥	◥	**NJ2216 E**
3600	5400	◥	◥	◥	◥	◥	◥	◥	◥	**NJ3216**
4200	5000	◥	◥	◥	◥	◥	◥	◥	◥	**NJ5216**
3500	4700	●	◴	◥	◥	◴	◴	◥	◥	**NJ316 E**
3100	4700	●	◴	◥	◥	◴	◴	◥	◥	**NJ2316 E**
3100	4700	◥	◥	◥	◥	◥	◥	◥	◥	**NJ3316**
3100	4200	●	◴	◥	◥	◴	◴	◥	◥	**NJ416**
5100	6000	◴	◴	◥	◥	◴	◴	◥	◥	**NJ1017**
4200	5000	●	◴	◥	◥	◴	◴	◥	◥	**NJ217 E**
3700	5000	●	◴	◥	◥	◴	◴	◥	◥	**NJ2217 E**
3300	5000	◥	◥	◥	◥	◥	◥	◥	◥	**NJ3217**
3800	4500	◥	◥	◥	◥	◥	◥	◥	◥	**NJ5217**
3300	4400	●	◴	◥	◥	◴	◴	◥	◥	**NJ317 E**
2900	4400	●	◴	◥	◥	◴	◴	◥	◥	**NJ2317 E**
3000	4500	◥	◥	◥	◥	◥	◥	◥	◥	**NJ3317**
3000	4000	●	◴	◥	◥	◴	◴	◥	◥	**NJ417**
4700	5600	◴	◴	◥	◥	◴	◴	◥	◥	**NJ1018**
3900	4700	●	◴	◥	◥	◴	◴	◥	◥	**NJ218 E**
3500	4700	●	◴	◥	◥	◴	◴	◥	◥	**NJ2218 E**
3100	4700	◥	◥	◥	◥	◥	◥	◥	◥	**NJ3218**
3500	4200	◥	◥	◥	◥	◥	◥	◥	◥	**NJ5218**
3100	4100	●	◴	◥	◥	◴	◴	◥	◥	**NJ318 E**
2800	4100	●	◴	◥	◥	◴	◴	◥	◥	**NJ2318 E**
2800	4200	◥	◥	◥	◥	◥	◥	◥	◥	**NJ3318**
2800	3700	●	◴	◥	◥	◴	◴	◥	◥	**NJ418**
4500	5300	◴	◴	◥	◥	◴	◴	◥	◥	**NJ1019**
3700	4400	●	◴	◥	◥	◴	◴	◥	◥	**NJ219 E**
3300	4400	●	◴	◥	◥	◴	◴	◥	◥	**NJ2219 E**
3300	4000	◥	◥	◥	◥	◥	◥	◥	◥	**NJ5219**
3000	4400	◥	◥	◥	◥	◥	◥	◥	◥	**NJ3219**
2900	3900	●	◴	◥	◥	◴	◴	◥	◥	**NJ319 E**
2600	4000	●	◴	◥	◥	◴	◴	◥	◥	**NJ2319 E**
2600	4000	◥	◥	◥	◥	◥	◥	◥	◥	**NJ3319**
2600	3400	●	◴	◥	◥	◴	◴	◥	◥	**NJ419**
4500	5300	◥	◥	◥	◥	◥	◥	◥	◥	**NJ1920**
4300	5100	◴	◴	◥	◥	◴	◴	◥	◥	**NJ1020**
3500	4200	●	◴	◥	◥	◴	◴	◥	◥	**NJ220 E**
3100	4200	●	◴	◥	◥	◴	◴	◥	◥	**NJ2220 E**
2800	4200	◥	◥	◥	◥	◥	◥	◥	◥	**NJ3220**
-	-	◴	◴	◴	◥	◥	◴	◥	◴	**NJ100X180X60,3**
3200	3800	◥	◥	◥	◥	◥	◥	◥	◥	**NJ5220**
2700	3600	●	◴	◥	◥	◴	◴	◥	◥	**NJ320 E**
2400	3600	●	◴	◥	◥	◴	◴	◥	◥	**NJ2320 E**
2500	3700	◥	◥	◥	◥	◥	◥	◥	◥	**NJ3320**
2500	3300	●	◴	◥	◥	◴	◴	◥	◥	**NJ420**

* Other products also available



https://nppnovoteh.com

5. CYLINDRICAL ROLLER BEARINGS

5.2. Single-row cylindrical roller bearings - types - NJ, NJP



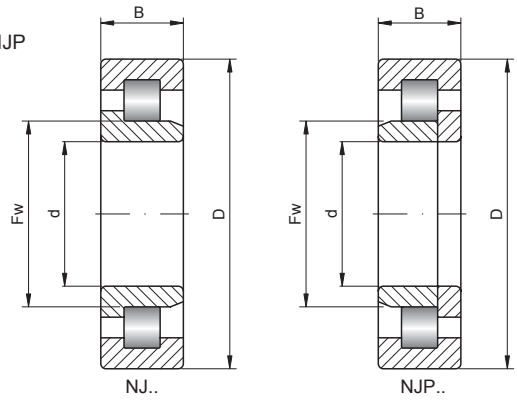

105 – 140 mm

Shaft [mm]	Bearing No.	Series		Dimensions [mm]				Weight [kg]	Basic load ratings [kN]	
		SD	SB	d	D	B	Fw		dyn. C	stat. C_0
105	**NJ1921**	9	0	105	145	20	115	0,98	71	102
	NJ1021	0	0	105	160	26	119,5	1,9	108	149
	NJ221 E	2	0	105	190	36	125,5	4,11	201	241
	NJ3221	2	3	105	190	65,1	126,8	8,21	344	482
	NJ5221	2	5	105	190	65,1	126,5	8,15	362	573
	NJ321 E	3	0	105	225	49	133	8,99	440	500
	NJ3321	3	3	105	225	87,3	135	17,86	638	871
	NJ421	4	0	105	260	60	144,5	19,6	471	510
110	**NJ1022**	0	0	110	170	28	125	2,37	134	171
	NJ222 E	2	0	110	200	38	132,5	5,03	293	365
	NJ2222 E	2	2	110	200	53	132,5	7,11	384	517
	NJ3222	2	3	110	200	69,8	132,5	9,8	427	607
	NJ5222	2	5	110	200	69,85	132,9	10,26	464	736
	NJ110X215X73	-	-	110	215	73	-	12,4	490	680
	NJ322 E	3	0	110	240	50	143	10,98	451	525
	NJ2322 E	3	2	110	240	80	143	19,29	680	880
	NJ3322	3	3	110	240	92,1	143	21,65	678	918
	NJ422	4	0	110	280	65	155	20,42	550	621
118	**NJ118X240X80**	-	-	118	240	80	-	17,1	550	740
120	**NJ2924**	9	2	120	180	27	131,5	1,77	116	188
	NJ1024	0	0	120	180	28	135	2,53	137	181
	NJ224 E	2	0	120	215	40	143,5	6	336	421
	NJ2224 E	2	2	120	215	58	143,5	8,79	452	619
	NJ3224	2	3	120	215	76	143,5	12,21	477	695
	NJ5224	2	5	120	215	76,2	145,1	12,11	482	794
	NJ120X240X80	-	-	120	240	80	-	15,8	550	740
	NJ324 E	3	0	120	260	55	154	13,75	528	610
	NJ2324 E	3	2	120	260	86	154	23,71	793	1030
	NJ3324	3	3	120	260	106	154	29,04	826	1120
	NJ424	4	0	120	310	72	170	28,74	690	770
130	**NJ1926**	9	0	130	180	24	142	1,84	112	163
	NJ2926	9	2	130	180	30	142	2,33	152	243
	NJ1026	0	0	130	200	33	148	3,87	171	238
	NJ2026	0	2	130	200	42	147	4,72	297	440
	NJ226 E	2	0	130	230	40	153,5	6,77	364	453
	NJ2226 E	2	2	130	230	64	153,5	11,49	530	737
	NJ5226	2	5	130	230	79,38	155	14,16	511	841
	NJ3226	2	3	130	230	80	156	14,47	550	857
	NJ130X240X80	-	-	130	240	80	-	16,5	540	780
	NJ130X250X80	-	-	130	250	80	-	18,9	470	600
	NJ326 E	3	0	130	280	58	167	17,14	616	736
	NJ2326 E	3	2	130	280	93	167	29,87	920	1230
	NJ3326	3	3	130	280	112	167	35,51	936	1290
	NJ426	4	0	130	340	78	185	37,05	771	876
140	**NJ1928**	9	0	140	190	24	152	1,95	117	177
	NJ2928	9	2	140	190	30	152	2,56	165	275
	NJ1028	0	0	140	210	33	158	4,11	175	250
	NJ228 E	2	0	140	250	42	169	8,72	392	514
	NJ2228 E	2	2	140	250	68	169	14,68	572	835
	NJ5228	2	5	140	250	82,55	168,4	17,55	596	981
	NJ3228	2	3	140	250	88	169	18,99	604	939

- warehouse - order - phone

Limiting speed [rpm]		Basic makes*								Bearing No.
grease	oil	-	M	TV	C2	C3	C4	K	NJP	
4100	4900	●	●	●	●	●	●	●	●	**NJ1921**
4100	4800	◴	◴	●	●	◴	◴	●	●	**NJ1021**
3300	3900	▲	◴	●	●	◴	◴	●	●	**NJ221 E**
2600	3900	●	●	●	●	●	●	●	●	**NJ3221**
3000	3500	●	●	●	●	●	●	●	●	**NJ5221**
2600	3500	▲	◴	●	●	◴	◴	●	●	**NJ321 E**
2300	3500	●	●	●	●	●	●	●	●	**NJ3321**
2400	3100	▲	◴	●	●	◴	◴	●	●	**NJ421**
3800	4500	◴	◴	●	●	◴	◴	●	●	**NJ1022**
3100	3700	▲	◴	●	●	◴	◴	●	●	**NJ222 E**
2800	3700	▲	◴	●	●	◴	◴	●	●	**NJ2222 E**
2500	3700	●	●	●	●	●	●	●	●	**NJ3222**
3000	3500	●	●	●	●	●	●	●	●	**NJ5222**
-	-	◴	◴	◴	●	●	◴	●	◴	**NJ110X215X73**
2400	3200	▲	◴	●	●	◴	◴	●	●	**NJ322 E**
2200	3200	◴	◴	●	●	◴	◴	●	●	**NJ2322 E**
2200	3300	●	●	●	●	●	●	●	●	**NJ3322**
2200	2900	▲	◴	●	●	◴	◴	●	●	**NJ422**
-	-	◴	◴	◴	●	●	◴	●	◴	**NJ118X240X80**
3700	4600	●	●	●	●	●	●	●	●	**NJ2924**
3500	4200	◴	◴	●	●	◴	◴	●	●	**NJ1024**
2800	3400	▲	◴	●	●	◴	◴	●	●	**NJ224 E**
2600	3400	▲	◴	●	●	◴	◴	●	●	**NJ2224 E**
2300	3400	●	●	●	●	●	●	●	●	**NJ3224**
2700	3200	●	●	●	●	●	●	●	●	**NJ5224**
-	-	◴	◴	◴	●	●	◴	●	◴	**NJ120X240X80**
2200	3000	▲	◴	●	●	◴	◴	●	●	**NJ324 E**
2000	3000	◴	◴	●	●	◴	◴	●	●	**NJ2324 E**
2000	3000	●	●	●	●	●	●	●	●	**NJ3324**
1900	2600	▲	◴	●	●	◴	◴	●	●	**NJ424**
3600	4600	●	●	●	●	●	●	●	●	**NJ1926**
3500	4500	●	●	●	●	●	●	●	●	**NJ2926**
3200	3800	◴	◴	●	●	◴	◴	●	●	**NJ1026**
3200	4800	●	●	●	●	●	●	●	●	**NJ2026**
2600	3200	▲	◴	●	●	◴	◴	●	●	**NJ226 E**
2400	3200	▲	◴	●	●	◴	◴	●	●	**NJ2226 E**
2500	3000	●	●	●	●	●	●	●	●	**NJ5226**
2100	3200	●	●	●	●	●	●	●	●	**NJ3226**
-	-	◴	◴	◴	●	●	◴	●	◴	**NJ130X240X80**
-	-	◴	◴	◴	●	●	◴	●	◴	**NJ130X250X80**
2000	2700	▲	◴	●	●	◴	◴	●	●	**NJ326 E**
1800	2700	◴	◴	●	●	◴	◴	●	●	**NJ2326 E**
1800	2700	●	●	●	●	●	●	●	●	**NJ3326**
1800	2300	▲	◴	●	●	◴	◴	●	●	**NJ426**
3200	4400	●	●	●	●	●	●	●	●	**NJ1928**
3250	4400	●	●	●	●	●	●	●	●	**NJ2928**
3000	3600	◴	◴	●	●	◴	◴	●	●	**NJ1028**
2400	2900	▲	◴	●	●	◴	◴	●	●	**NJ228 E**
2200	2900	◴	◴	●	●	◴	◴	●	●	**NJ2228 E**
2200	2700	●	●	●	●	●	●	●	●	**NJ5228**
1900	2900	●	●	●	●	●	●	●	●	**NJ3228**

* Other products also available



https://nppnovoteh.com

5. CYLINDRICAL ROLLER BEARINGS

5.2. Single-row cylindrical roller bearings - types - NJ, NJP



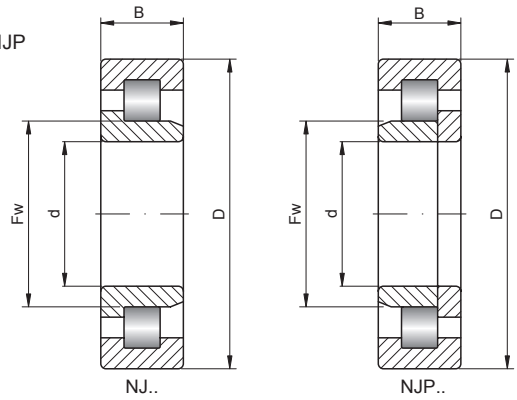

140 – 190 mm

Shaft [mm]	Bearing No.	Series		Dimensions [mm]				Weight [kg]	Basic load ratings [kN]	
		SD	SB	d	D	B	Fw		dyn. C	stat. C_0
140 cont.	**NJ328 E**	3	0	140	300	62	180	20,94	663	797
	NJ2328 E	3	2	140	300	102	180	37,77	1020	1380
	NJ3328	3	3	140	300	118	180	42,59	1090	1550
	NJ428	4	0	140	360	82	198	48,03	874	1020
150	**NJ1030**	0	0	150	225	35	169,5	4,96	201	281
	NJ3030	0	3	150	225	56	171	8,24	374	652
	NJ230 E	2	0	150	270	45	182	10,98	448	594
	NJ2230 E	2	2	150	270	73	182	19,19	662	982
	NJ5230	2	5	150	270	88,9	181,5	23,5	736	1260
	NJ3230	2	3	150	270	96	182	24,32	749	1200
	NJ330 E	3	0	150	320	65	193	27,71	757	922
	NJ2330 E	3	2	150	320	108	193	45,88	1180	1600
	NJ3330	3	3	150	320	128	193	52,75	1180	1700
	NJ430	4	0	150	380	85	213	54,7	930	1120
159	**NJ159X300X84**	-	-	159	300	84	-	29,1	850	1200
160	**NJ1932**	9	0	160	220	28	175	3,16	149	228
	NJ2932	9	2	160	220	36	175	4,16	199	330
	NJ1032	0	0	160	240	38	180	6,09	236	330
	NJ2032	0	2	160	240	48	179	8,11	418	670
	NJ3132	1	3	160	270	86	187	21,14	681	1070
	NJ232 E	2	0	160	290	48	195	15,19	498	666
	NJ2232 E	2	2	160	290	80	193	24,22	809	1190
	NJ5232	2	5	160	290	98,42	193,6	29,66	764	1310
	NJ3232	2	3	160	290	104	195	30,58	857	1390
	NJ160X300X84	-	-	160	300	84	-	28,5	850	1200
	NJ332 E	3	0	160	340	68	204	32,84	857	1050
	NJ2332 E	3	2	160	340	114	204	54,5	1310	1820
	NJ3332	3	3	160	340	136	208	63,12	1270	1890
170	**NJ1034**	0	0	170	260	42	193	8,11	276	400
	NJ2034	0	2	170	260	54	191	11,29	473	735
	NJ3034	0	3	170	260	67	196	13,34	461	824
	NJ234 E	2	0	170	310	52	207	19,09	603	802
	NJ2234 E	2	2	170	310	86	205	29,97	967	1410
	NJ5234	2	5	170	310	104,77	205,4	36,43	891	1470
	NJ3234	2	3	170	310	110	208	37,15	964	1580
	NJ2334 E	3	2	170	360	120	216	64,25	1220	1750
	NJ3334	3	3	170	360	140	220	72,66	1420	2120
	NJ334 E	3	0	170	361	73	218	39,62	809	1010
180	**NJ1036**	0	0	180	280	46	205	10,78	356	503
	NJ3036	0	3	180	280	74	207	17,75	600	1040
	NJ236 E	2	0	180	320	52	217	19,81	626	852
	NJ2236 E	2	2	180	320	86	215	31,2	1010	1510
	NJ3236	2	3	180	320	112	218	39,41	999	1680
	NJ336 E	3	0	180	380	75	231	43,72	917	1150
	NJ2336 E	3	2	180	380	126	227	74,92	1350	1940
	NJ3336	3	3	180	380	150	232	86,62	1660	2520
	NJ436	4	0	180	440	95	247	82,1	1250	1600
190	**NJ1938**	9	0	190	260	33	207,5	5,64	251	400
	NJ1038	0	0	190	290	46	215	11,19	366	530
	NJ3038	0	3	190	290	75	217	18,88	636	1140

- warehouse - order - phone

Limiting speed [rpm]		Basic makes*								Bearing No.
grease	oil	-	M	TV	C2	C3	C4	K	NJP	
1900	2500	●	◴	◝	◝	◴	◴	◝	◝	**NJ328 E**
1700	2500	◴	◴	◝	◝	◴	◴	◝	◝	**NJ2328 E**
1700	2500	◝	◝	◝	◝	◝	◝	◝	◝	**NJ3328**
1600	2200	◴	◴	◝	◝	◴	◴	◝	◝	**NJ428**
2800	3300	◴	◴	◝	◝	◴	◴	◝	◝	**NJ1030**
3000	4300	◝	◝	◝	◝	◝	◝	◝	◝	**NJ3030**
2200	2600	●	◴	◝	◝	◴	◴	◝	◝	**NJ230 E**
2000	2600	◴	◴	◝	◝	◴	◴	◝	◝	**NJ2230 E**
2000	2400	◝	◝	◝	◝	◝	◝	◝	◝	**NJ5230**
1800	2700	◝	◝	◝	◝	◝	◝	◝	◝	**NJ3230**
1700	2300	●	◴	◝	◝	◴	◴	◝	◝	**NJ330 E**
1500	2300	◴	◴	◝	◝	◴	◴	◝	◝	**NJ2330 E**
1600	2300	◝	◝	◝	◝	◝	◝	◝	◝	**NJ3330**
1500	2000	◴	◴	◝	◝	◴	◴	◝	◝	**NJ430**
-	-	◴	◴	◴	◝	◝	◴	◝	◴	**NJ159X300X84**
2900	4200	◝	◝	◝	◝	◝	◝	◝	◝	**NJ1932**
3000	4300	◝	◝	◝	◝	◝	◝	◝	◝	**NJ2932**
2600	3000	◴	◴	◝	◝	◴	◴	◝	◝	**NJ1032**
2600	4000	◝	◝	◝	◝	◝	◝	◝	◝	**NJ2032**
2500	4000	◝	◝	◝	◝	◝	◝	◝	◝	**NJ3132**
2000	2400	◴	◴	◝	◝	◴	◴	◝	◝	**NJ232 E**
1800	2400	◴	◴	◝	◝	◴	◴	◝	◝	**NJ2232 E**
1900	2200	◝	◝	◝	◝	◝	◝	◝	◝	**NJ5232**
1600	2500	◝	◝	◝	◝	◝	◝	◝	◝	**NJ3232**
-	-	◴	◴	◴	◝	◝	◴	◝	◴	**NJ160X300X84**
1600	2100	◴	◴	◝	◝	◴	◴	◝	◝	**NJ332 E**
1400	2100	◝	◝	◝	◝	◝	◝	◝	◝	**NJ2332 E**
1400	2200	◝	◝	◝	◝	◝	◝	◝	◝	**NJ3332**
2400	2800	◴	◴	◝	◝	◴	◴	◝	◝	**NJ1034**
2400	3600	◝	◝	◝	◝	◝	◝	◝	◝	**NJ2034**
2700	4000	◝	◝	◝	◝	◝	◝	◝	◝	**NJ3034**
1900	2200	◴	◴	◝	◝	◴	◴	◝	◝	**NJ234 E**
1700	2200	◴	◴	◝	◝	◴	◴	◝	◝	**NJ2234 E**
1800	2100	◝	◝	◝	◝	◝	◝	◝	◝	**NJ5234**
1500	2300	◝	◝	◝	◝	◝	◝	◝	◝	**NJ3234**
1300	2000	◝	◝	◝	◝	◝	◝	◝	◝	**NJ2334 E**
1300	2000	◝	◝	◝	◝	◝	◝	◝	◝	**NJ3334**
1500	2000	◴	◴	◝	◝	◴	◴	◝	◝	**NJ334 E**
2200	2600	◴	◴	◝	◝	◴	◴	◝	◝	**NJ1036**
2500	3800	◝	◝	◝	◝	◝	◝	◝	◝	**NJ3036**
1800	2100	◴	◴	◝	◝	◴	◴	◝	◝	**NJ236 E**
1600	2100	◴	◴	◝	◝	◴	◴	◝	◝	**NJ2236 E**
1400	2200	◝	◝	◝	◝	◝	◝	◝	◝	**NJ3236**
1400	1900	◴	◴	◝	◝	◴	◴	◝	◝	**NJ336 E**
1300	1900	◝	◝	◝	◝	◝	◝	◝	◝	**NJ2336 E**
1300	1900	◝	◝	◝	◝	◝	◝	◝	◝	**NJ3336**
1600	2400	◴	◴	◝	◝	◴	◴	◝	◝	**NJ436**
2750	4000	◝	◝	◝	◝	◝	◝	◝	◝	**NJ1938**
2100	2500	◴	◴	◝	◝	◴	◴	◝	◝	**NJ1038**
2200	3600	◝	◝	◝	◝	◝	◝	◝	◝	**NJ3038**

* Other products also available



https://nppnovoteh.com

5. CYLINDRICAL ROLLER BEARINGS

5.2. Single-row cylindrical roller bearings - types - NJ, NJP



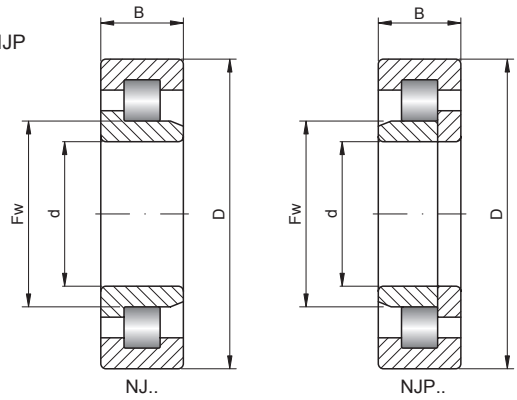

190 – 280 mm

Shaft [mm]	Bearing No.	Series		Dimensions [mm]				Weight [kg]	Basic load ratings [kN]	
		SD	SB	d	D	B	Fw		dyn. C	stat. C_0
190 cont.	**NJ3138**	1	3	190	320	104	223	35,41	942	1570
	NJ238 E	2	0	190	340	55	230	23,91	694	954
	NJ2238 E	2	2	190	340	92	228	37,97	1100	1670
	NJ3238	2	3	190	340	120	231	48,03	1310	1930
	NJ338 E	3	0	190	400	78	245	51,21	987	1260
	NJ2338 E	3	2	190	400	132	245	86,93	1520	2220
	NJ3338	3	3	190	400	155	245	99,04	1870	2910
200	**NJ2840**	8	2	200	250	30	211,5	3,64	183	345
	NJ1940	9	0	200	280	38	218	7,59	341	540
	NJ1040	0	0	200	310	51	229	14,47	388	582
	NJ3040	0	3	200	310	82	232	24,32	689	1250
	NJ240 E	2	0	200	360	58	243	27,92	766	1060
	NJ2240 E	2	2	200	360	98	241	45,57	1220	1870
	NJ3240	2	3	200	360	128	244	57,68	1200	2020
	NJ340 E	3	0	200	420	80	258	57,68	987	1270
	NJ2340 E	3	2	200	420	138	253	99,96	1520	2240
	NJ3340	3	3	200	420	165	260	115,97	1870	2930
220	**NJ1944**	9	0	220	300	38	240	8,52	336	560
	NJ2944	9	2	220	300	48	241,5	10,08	366	655
	NJ1044	0	0	220	340	56	250	18,99	507	748
	NJ3144	1	3	220	370	120	261	54,6	1230	2140
	NJ244 E	2	0	220	400	65	268	39,51	766	1080
	NJ2244 E	2	2	220	400	108	259	62,5	1130	1810
	NJ3244	2	3	220	400	144	270	80,87	1630	2880
	NJ344 E	3	0	220	460	88	282	76,36	1200	1570
	NJ2344 E	3	2	220	460	145	277	122,13	1810	2690
	NJ3344	3	3	220	460	180	284	151,89	2130	3300
240	**NJ1048**	0	0	240	360	56	270	20,63	535	822
	NJ3048	0	3	240	360	92	276	33,87	774	1450
	NJ248 E	2	0	240	440	72	293	53,47	949	1340
	NJ2248 E	2	2	240	440	120	287	84,67	1430	2320
	NJ3248	2	3	240	440	160	295	109,81	1950	3460
	NJ348 E	3	0	240	500	95	306	97,09	1430	1950
	NJ2348 E	3	2	240	500	155	303	156	2170	3320
	NJ3348	3	3	240	500	195	310	193,97	2540	4070
260	**NJ1952**	9	0	260	360	46	285	14,27	410	686
	NJ2952	9	2	260	360	60	285	18,88	558	1020
	NJ1052	0	0	260	400	65	296	29,97	651	979
	NJ3052	0	3	260	400	104	290,5	50,8	1420	2320
	NJ3152	1	3	260	440	144	308	95,14	1730	3120
	NJ252 E	2	0	260	480	80	317	70,81	1100	1580
	NJ2252 E	2	2	260	480	130	313	109,81	1790	2950
	NJ3252	2	3	260	480	174	320	142,66	2140	3680
	NJ352 E	3	0	260	540	102	337	123,16	1900	2600
	NJ2352 E	3	2	260	540	165	324	189,87	2430	3750
	NJ3352	3	3	260	540	206	336	238,1	2940	4790
280	**NJ3856**	8	3	280	350	52	298	11,8	427	968
	NJ1956	9	0	280	380	46	305	15,09	406	689
	NJ1056	0	0	280	420	65	316	36,13	669	1030
	NJ2056	0	2	280	420	82	314	41,1	1230	2160
	NJ3156	1	3	280	460	146	328	99,76	1810	3280

- warehouse - order - phone

Limiting speed [rpm]		Basic makes*								Bearing No.
grease	oil	-	M	TV	C2	C3	C4	K	NJP	
2000	3200	●	●	●	●	●	●	●	●	**NJ3138**
1700	2000	◴	◴	●	●	◴	◴	●	●	**NJ238 E**
1500	2000	◴	◴	●	●	◴	◴	●	●	**NJ2238 E**
1300	2000	●	●	●	●	●	●	●	●	**NJ3238**
1300	1800	◴	◴	●	●	◴	◴	●	●	**NJ338 E**
1200	1800	●	●	●	●	●	●	●	●	**NJ2338 E**
1200	1800	●	●	●	●	●	●	●	●	**NJ3338**
2800	3600	●	●	●	●	●	●	●	●	**NJ2840**
2600	3800	●	●	●	●	●	●	●	●	**NJ1940**
1900	2300	◴	◴	●	●	◴	◴	●	●	**NJ1040**
2000	3400	●	●	●	●	●	●	●	●	**NJ3040**
1600	1900	◴	◴	●	●	◴	◴	●	●	**NJ240 E**
1400	1900	◴	◴	●	●	◴	◴	●	●	**NJ2240 E**
1300	1900	●	●	●	●	●	●	●	●	**NJ3240**
1200	1700	◴	◴	●	●	◴	◴	●	●	**NJ340 E**
1100	1700	●	●	●	●	●	●	●	●	**NJ2340 E**
1100	1700	●	●	●	●	●	●	●	●	**NJ3340**
2400	3200	●	●	●	●	●	●	●	●	**NJ1944**
2000	3000	●	●	●	●	●	●	●	●	**NJ2944**
1700	2000	●	●	●	●	●	●	●	●	**NJ1044**
1700	2700	●	●	●	●	●	●	●	●	**NJ3144**
1400	1700	◴	◴	●	●	◴	◴	●	●	**NJ244 E**
1200	1700	◴	◴	●	●	◴	◴	●	●	**NJ2244 E**
1100	1700	●	●	●	●	●	●	●	●	**NJ3244**
1100	1500	●	●	●	●	●	●	●	●	**NJ344 E**
1000	1500	●	●	●	●	●	●	●	●	**NJ2344 E**
990	1500	●	●	●	●	●	●	●	●	**NJ3344**
1600	1900	●	●	●	●	●	●	●	●	**NJ1048**
1600	2600	●	●	●	●	●	●	●	●	**NJ3048**
1200	1500	●	●	●	●	●	●	●	●	**NJ248 E**
1100	1500	●	●	●	●	●	●	●	●	**NJ2248 E**
990	1500	●	●	●	●	●	●	●	●	**NJ3248**
990	1300	●	●	●	●	●	●	●	●	**NJ348 E**
900	1400	●	●	●	●	●	●	●	●	**NJ2348 E**
880	1300	●	●	●	●	●	●	●	●	**NJ3348**
2200	2900	●	●	●	●	●	●	●	●	**NJ1952**
1600	2400	●	●	●	●	●	●	●	●	**NJ2952**
1400	1700	●	●	●	●	●	●	●	●	**NJ1052**
1500	2400	●	●	●	●	●	●	●	●	**NJ3052**
1400	2300	●	●	●	●	●	●	●	●	**NJ3152**
1100	1300	●	●	●	●	●	●	●	●	**NJ252 E**
990	1300	●	●	●	●	●	●	●	●	**NJ2252 E**
880	1300	●	●	●	●	●	●	●	●	**NJ3252**
900	1100	●	●	●	●	●	●	●	●	**NJ352 E**
800	1200	●	●	●	●	●	●	●	●	**NJ2352 E**
790	1200	●	●	●	●	●	●	●	●	**NJ3352**
2000	3300	●	●	●	●	●	●	●	●	**NJ3856**
2000	2600	●	●	●	●	●	●	●	●	**NJ1956**
1300	1500	●	●	●	●	●	●	●	●	**NJ1056**
1400	2200	●	●	●	●	●	●	●	●	**NJ2056**
1300	2150	●	●	●	●	●	●	●	●	**NJ3156**

* Other products also available



https://nppnovoteh.com

5. CYLINDRICAL ROLLER BEARINGS

5.2. Single-row cylindrical roller bearings - types - NJ, NJP



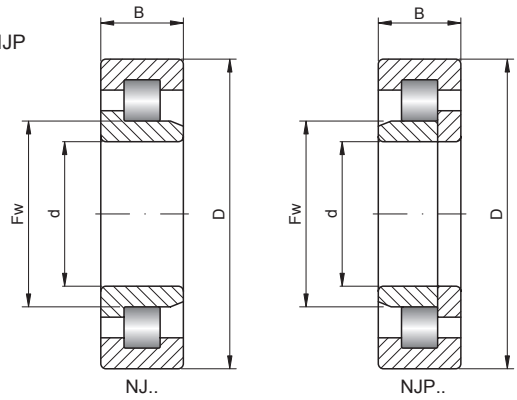

280 – 400 mm

Shaft [mm]	Bearing No.	Series		Dimensions [mm]				Weight [kg]	Basic load ratings [kN]	
		SD	SB	d	D	B	Fw		dyn. C	stat. C_0
280 cont.	**NJ256 E**	2	0	280	500	80	337	74,61	1140	1680
	NJ2256 E	2	2	280	500	130	333	117	2280	3600
	NJ356 E	3	0	280	580	108	362	148,8	2160	3000
	NJ2356 E	3	2	280	580	175	351	237,1	2750	4200
300	**NJ2860**	8	2	300	380	48	321	14,4	473	980
	NJ3860	8	3	300	380	60	322	17	543	1300
	NJ1960	9	0	300	420	56	332	23,9	507	873
	NJ1060	0	0	300	460	74	340	45,3	890	1380
	NJ2060	0	2	300	460	95	341	61,1	1510	2750
	NJ3060	0	3	300	460	118	346	73,2	1290	2470
	NJ3160	1	3	300	500	160	352	132,4	2150	3940
	NJ260 E	2	0	300	540	85	364	93,1	1350	1960
	NJ2260	2	2	300	540	140	364	141,6	2400	3800
	NJ2360	3	2	300	620	185	371	277,1	4020	5850
320	**NJ1864**	8	0	320	400	38	341	12	369	710
	NJ2864	8	2	320	400	48	341	14,9	495	1060
	NJ1964	9	0	320	440	56	350	27,7	693	1200
	NJ1064	0	0	320	480	74	360	49,7	913	1450
	NJ2064	0	2	320	480	95	360	64,1	1450	265
	NJ3064	0	3	320	480	121	366	78,4	1320	2590
	NJ3164	1	3	320	540	176	368	179,6	3140	5400
	NJ264 E	2	0	320	580	92	390	117	1540	2270
	NJ2264	2	2	320	580	150	390	176,5	3000	4100
	NJ364	3	0	320	670	112	425	204,2	2300	3200
340	**NJ2868**	8	2	340	420	48	361	15,4	512	1120
	NJ3868	8	3	340	420	60	362	18,6	624	1500
	NJ1968	9	0	340	460	56	370	26,4	605	1080
	NJ2968	9	2	340	460	72	372	35,6	800	1620
	NJ1068	0	0	340	520	82	385	65,8	1090	1750
	NJ3068	0	3	340	520	133	393	104,7	1570	3080
	NJ3168	1	3	340	580	190	399	215,5	3190	5700
	NJ2268	2	2	340	620	165	416	225,8	2640	4500
360	**NJ1872**	8	0	360	440	38	380	12	339	692
	NJ1972	9	0	360	480	56	392	28	566	1060
	NJ2972	9	2	360	480	72	393	38,2	845	1820
	NJ1072	0	0	360	540	82	405	68,9	1120	1830
	NJ2072	0	2	360	540	106	405	90,8	1940	3600
	NJ3072	0	3	360	540	134	413	113,9	1970	4180
	NJ3172	1	3	360	600	192	405	230,9	3410	5700
	NJ2272	2	2	360	650	170	437	256,6	2920	4900
	NJ2372	3	2	360	750	224	465	523,4	5010	8150
380	**NJ1876**	8	0	380	480	46	406	23,6	539	1060
	NJ3876	8	3	380	480	75	405	33,1	852	1970
	NJ1076	0	0	380	560	82	425	71,9	1150	1920
	NJ2076	0	2	380	560	106	425	94,9	1980	3750
	NJ3076	0	3	380	560	135	433	116	1690	3470
	NJ2276	2	2	380	680	175	462	282,2	3140	5500
400	**NJ1880**	8	0	400	500	46	426	20,6	456	924
	NJ3880	8	3	400	500	75	426	35,1	852	2060
	NJ1980	9	0	400	540	65	435	42,1	952	1730

- warehouse - order - phone

Limiting speed [rpm]		Basic makes*								Bearing No.
grease	oil	-	M	TV	C2	C3	C4	K	NJP	
1000	1200	✓	✓	✓	✓	✓	✓	✓	✓	**NJ256 E**
900	1250	✓	✓	✓	✓	✓	✓	✓	✓	**NJ2256 E**
800	1000	✓	✓	✓	✓	✓	✓	✓	✓	**NJ356 E**
750	1100	✓	✓	✓	✓	✓	✓	✓	✓	**NJ2356 E**
1700	1700	✓	✓	✓	✓	✓	✓	✓	✓	**NJ2860**
1800	2900	✓	✓	✓	✓	✓	✓	✓	✓	**NJ3860**
1800	2300	✓	✓	✓	✓	✓	✓	✓	✓	**NJ1960**
1200	1400	✓	✓	✓	✓	✓	✓	✓	✓	**NJ1060**
1300	2000	✓	✓	✓	✓	✓	✓	✓	✓	**NJ2060**
1400	2200	✓	✓	✓	✓	✓	✓	✓	✓	**NJ3060**
1250	1900	✓	✓	✓	✓	✓	✓	✓	✓	**NJ3160**
920	1100	✓	✓	✓	✓	✓	✓	✓	✓	**NJ260 E**
880	1200	✓	✓	✓	✓	✓	✓	✓	✓	**NJ2260**
950	1600	✓	✓	✓	✓	✓	✓	✓	✓	**NJ2360**
1600	2400	✓	✓	✓	✓	✓	✓	✓	✓	**NJ1864**
1600	2400	✓	✓	✓	✓	✓	✓	✓	✓	**NJ2864**
1700	2100	✓	✓	✓	✓	✓	✓	✓	✓	**NJ1964**
1100	1300	✓	✓	✓	✓	✓	✓	✓	✓	**NJ1064**
1200	1900	✓	✓	✓	✓	✓	✓	✓	✓	**NJ2064**
1350	2000	✓	✓	✓	✓	✓	✓	✓	✓	**NJ3064**
1000	1700	✓	✓	✓	✓	✓	✓	✓	✓	**NJ3164**
840	1000	✓	✓	✓	✓	✓	✓	✓	✓	**NJ264 E**
850	1150	✓	✓	✓	✓	✓	✓	✓	✓	**NJ2264**
750	950	✓	✓	✓	✓	✓	✓	✓	✓	**NJ364**
1500	2000	✓	✓	✓	✓	✓	✓	✓	✓	**NJ2868**
1500	2200	✓	✓	✓	✓	✓	✓	✓	✓	**NJ3868**
1600	2000	✓	✓	✓	✓	✓	✓	✓	✓	**NJ1968**
1400	1900	✓	✓	✓	✓	✓	✓	✓	✓	**NJ2968**
980	1200	✓	✓	✓	✓	✓	✓	✓	✓	**NJ1068**
1300	1900	✓	✓	✓	✓	✓	✓	✓	✓	**NJ3068**
950	1600	✓	✓	✓	✓	✓	✓	✓	✓	**NJ3168**
1000	1500	✓	✓	✓	✓	✓	✓	✓	✓	**NJ2268**
1450	2200	✓	✓	✓	✓	✓	✓	✓	✓	**NJ1872**
1400	1800	✓	✓	✓	✓	✓	✓	✓	✓	**NJ1972**
1200	1700	✓	✓	✓	✓	✓	✓	✓	✓	**NJ2972**
920	1100	✓	✓	✓	✓	✓	✓	✓	✓	**NJ1072**
1100	1600	✓	✓	✓	✓	✓	✓	✓	✓	**NJ2072**
1200	1700	✓	✓	✓	✓	✓	✓	✓	✓	**NJ3072**
900	1500	✓	✓	✓	✓	✓	✓	✓	✓	**NJ3172**
950	1400	✓	✓	✓	✓	✓	✓	✓	✓	**NJ2272**
850	1300	✓	✓	✓	✓	✓	✓	✓	✓	**NJ2372**
1300	2000	✓	✓	✓	✓	✓	✓	✓	✓	**NJ1876**
1200	1800	✓	✓	✓	✓	✓	✓	✓	✓	**NJ3876**
860	1000	✓	✓	✓	✓	✓	✓	✓	✓	**NJ1076**
1000	1600	✓	✓	✓	✓	✓	✓	✓	✓	**NJ2076**
1100	1600	✓	✓	✓	✓	✓	✓	✓	✓	**NJ3076**
900	1400	✓	✓	✓	✓	✓	✓	✓	✓	**NJ2276**
1250	1800	✓	✓	✓	✓	✓	✓	✓	✓	**NJ1880**
1100	1600	✓	✓	✓	✓	✓	✓	✓	✓	**NJ3880**
1200	1600	✓	✓	✓	✓	✓	✓	✓	✓	**NJ1980**

* Other products also available

https://nppnovoteh.com

5. CYLINDRICAL ROLLER BEARINGS

5.2. Single-row cylindrical roller bearings - types - NJ, NJP



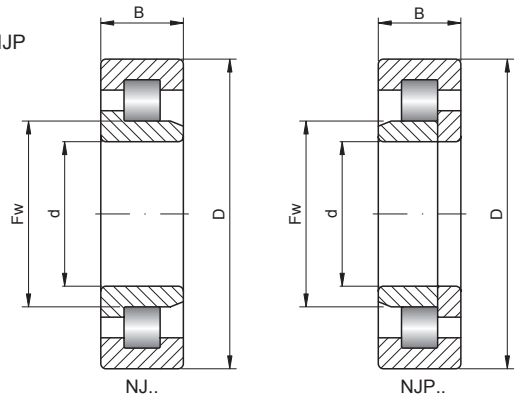

400 – 530 mm

Shaft [mm]	Bearing No.	Series		Dimensions [mm]				Weight [kg]	Basic load ratings [kN]	
		SD	SB	d	D	B	Fw		dyn. C	stat. C_0
400 cont.	**NJ1080**	0	0	400	600	90	450	93,4	1400	2310
	NJ2080	0	2	400	600	118	449	123,2	2200	4750
	NJ3080	0	3	400	600	148	450	151,9	2250	4370
420	**NJ1884**	8	0	420	520	46	447	21	550	1120
	NJ3884	8	3	420	520	75	448	36,4	882	2260
	NJ1984	9	0	420	560	65	456	43,6	800	1510
	NJ2984	9	2	420	560	82	458	60,6	1210	2550
	NJ1084	0	0	420	620	90	470	97,1	1390	2320
	NJ2084	0	2	420	620	118	469	128,3	2460	4750
	NJ3084	0	3	420	620	150	470	160,1	1380	4770
	NJ3184	1	3	420	700	224	485	390	4950	9000
440	**NJ2888**	8	2	440	540	60	464	34,9	809	1900
	NJ1988	9	0	440	600	74	482	65,7	1060	2000
	NJ2988	9	2	440	600	95	482	86,2	1720	3600
	NJ3988	9	3	440	600	118	482	107,8	1980	4250
	NJ1088	0	0	440	650	94	493	111,9	1490	2520
	NJ2088	0	2	440	650	122	487	148,8	2550	4900
	NJ3188	1	3	440	720	226	509	405,4	5120	9650
460	**NJ2892**	8	2	460	580	72	489	49,3	1080	2400
	NJ1992	9	0	460	620	74	500	62,4	1060	1990
	NJ2992	9	2	460	620	95	495	91,3	1720	3600
	NJ1092	0	0	460	680	100	516	130,3	1590	2730
	NJ2092	0	2	460	680	128	513	169,3	2810	5400
	NJ3092	0	3	460	680	163	519	211,4	2960	6150
	NJ3192	1	3	460	760	240	529,5	467	5280	9650
	NJ1292	2	1	460	830	165	554	425,9	4180	6800
	NJ2292	2	2	460	830	212	554	543,9	5120	8650
480	**NJ1896**	8	0	480	600	56	511	40,5	765	1630
	NJ2896	8	2	480	600	72	511	48,7	1100	2450
	NJ1996	9	0	480	650	78	525	74,6	1130	2200
	NJ2996	9	2	480	650	100	525	99,3	1600	3450
	NJ1096	0	0	480	700	100	536	137,5	1700	3100
	NJ2096	0	2	480	700	128	533	174,5	2860	5600
	NJ3096	0	3	480	700	165	539	221,7	3030	6410
	NJ3196	1	3	480	790	248	547	513,2	5940	10800
500	**NJ18/500**	8	0	500	620	56	534	38,3	705	1560
	NJ28/500	8	2	500	620	72	530	51,3	1170	2700
	NJ38/500	8	3	500	620	90	534	63,4	1210	3140
	NJ19/500	9	0	500	670	78	546	80,6	1480	3160
	NJ29/500	9	2	500	670	100	546	103,7	1940	4500
	NJ39/500	9	3	500	670	128	544	133,4	2330	5200
	NJ10/500	0	0	500	720	100	556	144,7	2270	4440
	NJ20/500	0	2	500	720	128	553	184,7	2920	5850
	NJ30/500	0	3	500	720	167	553	230,9	4020	8000
	NJ31/500	1	3	500	830	264	576	610,6	6440	12000
	NJ12/500	2	1	500	920	185	603	600,4	5280	8500
530	**NJ28/530**	8	2	530	650	72	560,5	53	1170	2750
	NJ19/530	9	0	530	710	82	575	89,2	1320	2560
	NJ29/530	9	2	530	710	106	577	121	2160	4850
	NJ10/530	0	0	530	780	112	589	195	2290	4050

- warehouse - order - phone

Limiting speed [rpm]		Basic makes*								Bearing No.
grease	oil	-	M	TV	C2	C3	C4	K	NJP	
780	920	✓	✓	✓	✓	✓	✓	✓	✓	**NJ1080**
950	1400	✓	✓	✓	✓	✓	✓	✓	✓	**NJ2080**
1000	1500	✓	✓	✓	✓	✓	✓	✓	✓	**NJ3080**
1200	1600	✓	✓	✓	✓	✓	✓	✓	✓	**NJ1884**
900	1100	✓	✓	✓	✓	✓	✓	✓	✓	**NJ3884**
1150	1500	✓	✓	✓	✓	✓	✓	✓	✓	**NJ1984**
1100	1500	✓	✓	✓	✓	✓	✓	✓	✓	**NJ2984**
730	860	✓	✓	✓	✓	✓	✓	✓	✓	**NJ1084**
900	1400	✓	✓	✓	✓	✓	✓	✓	✓	**NJ2084**
900	1400	✓	✓	✓	✓	✓	✓	✓	✓	**NJ3084**
750	1300	✓	✓	✓	✓	✓	✓	✓	✓	**NJ3184**
1100	1500	✓	✓	✓	✓	✓	✓	✓	✓	**NJ2888**
1100	1400	✓	✓	✓	✓	✓	✓	✓	✓	**NJ1988**
1100	1400	✓	✓	✓	✓	✓	✓	✓	✓	**NJ2988**
900	1100	✓	✓	✓	✓	✓	✓	✓	✓	**NJ3988**
680	800	✓	✓	✓	✓	✓	✓	✓	✓	**NJ1088**
8500	1300	✓	✓	✓	✓	✓	✓	✓	✓	**NJ2088**
700	1200	✓	✓	✓	✓	✓	✓	✓	✓	**NJ3188**
1100	1400	✓	✓	✓	✓	✓	✓	✓	✓	**NJ2892**
1000	1350	✓	✓	✓	✓	✓	✓	✓	✓	**NJ1992**
1000	1300	✓	✓	✓	✓	✓	✓	✓	✓	**NJ2992**
630	750	✓	✓	✓	✓	✓	✓	✓	✓	**NJ1092**
800	1200	✓	✓	✓	✓	✓	✓	✓	✓	**NJ2092**
850	1300	✓	✓	✓	✓	✓	✓	✓	✓	**NJ3092**
670	1100	✓	✓	✓	✓	✓	✓	✓	✓	**NJ3192**
750	1100	✓	✓	✓	✓	✓	✓	✓	✓	**NJ1292**
700	1100	✓	✓	✓	✓	✓	✓	✓	✓	**NJ2292**
1000	1300	✓	✓	✓	✓	✓	✓	✓	✓	**NJ1896**
1000	1300	✓	✓	✓	✓	✓	✓	✓	✓	**NJ2896**
950	1300	✓	✓	✓	✓	✓	✓	✓	✓	**NJ1996**
900	1200	✓	✓	✓	✓	✓	✓	✓	✓	**NJ2996**
600	700	✓	✓	✓	✓	✓	✓	✓	✓	**NJ1096**
750	1200	✓	✓	✓	✓	✓	✓	✓	✓	**NJ2096**
800	1200	✓	✓	✓	✓	✓	✓	✓	✓	**NJ3096**
630	1100	✓	✓	✓	✓	✓	✓	✓	✓	**NJ3196**
900	1200	✓	✓	✓	✓	✓	✓	✓	✓	**NJ18/500**
950	1300	✓	✓	✓	✓	✓	✓	✓	✓	**NJ28/500**
800	1000	✓	✓	✓	✓	✓	✓	✓	✓	**NJ38/500**
900	1250	✓	✓	✓	✓	✓	✓	✓	✓	**NJ19/500**
860	1100	✓	✓	✓	✓	✓	✓	✓	✓	**NJ29/500**
800	1200	✓	✓	✓	✓	✓	✓	✓	✓	**NJ39/500**
570	650	✓	✓	✓	✓	✓	✓	✓	✓	**NJ10/500**
750	1100	✓	✓	✓	✓	✓	✓	✓	✓	**NJ20/500**
750	1100	✓	✓	✓	✓	✓	✓	✓	✓	**NJ30/500**
600	1000	✓	✓	✓	✓	✓	✓	✓	✓	**NJ31/500**
670	950	✓	✓	✓	✓	✓	✓	✓	✓	**NJ12/500**
900	1200	✓	✓	✓	✓	✓	✓	✓	✓	**NJ28/530**
870	1190	✓	✓	✓	✓	✓	✓	✓	✓	**NJ19/530**
830	1050	✓	✓	✓	✓	✓	✓	✓	✓	**NJ29/530**
800	1000	✓	✓	✓	✓	✓	✓	✓	✓	**NJ10/530**

* Other products also available



https://nppnovoteh.com

5. CYLINDRICAL ROLLER BEARINGS

5.2. Single-row cylindrical roller bearings - types - NJ, NJP



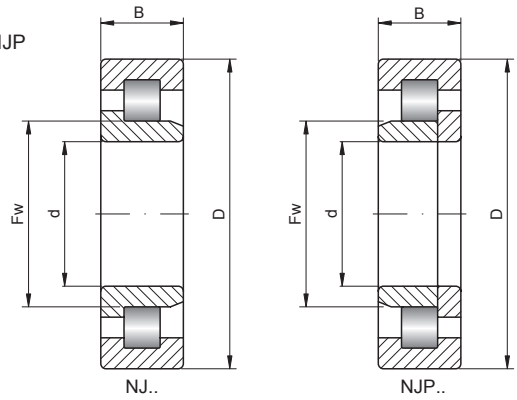

530 – 900 mm

Shaft [mm]	Bearing No.	Series		Dimensions [mm]				Weight [kg]	Basic load ratings [kN]	
		SD	SB	d	D	B	Fw		dyn. C	stat. C_0
530 cont.	**NJ20/530**	0	2	530	780	145	591	262	3740	7350
	NJ30/530 E	0	3	530	780	185	589	317	4740	10100
	NJ31/530	1	3	530	870	272	612	677	7480	14600
560	**NJ18/560**	8	0	560	680	56	591	46	809	1830
	NJ19/560	9	0	560	750	85	613	108	1600	3260
	NJ29/560	9	2	560	750	112	613	144	2040	4480
	NJ10/560	0	0	560	820	115	630	216	2890	5630
	NJ20/560	0	2	560	820	150	626	298	3800	7650
	NJ31/560	1	3	560	920	280	648	765	7420	15100
	NJ12/560	2	1	560	1030	206	668	826	7210	11200
600	**NJ18/600**	8	0	600	730	60	632	52	897	2040
	NJ28/600	8	2	600	730	78	632	72	1320	3450
	NJ19/600	9	0	600	800	90	652	129	1980	4170
	NJ29/600	9	2	600	800	118	649	169	2920	6550
	NJ10/600	0	0	600	870	118	661	251	2750	5100
	NJ20/600	0	2	600	870	155	661	334	4180	8000
	NJ30/600	0	3	600	870	200	661	426	5390	11000
	NJ2/600	2	0	600	1090	155	749	729	5610	9800
630	**NJ18/630**	8	0	630	780	69	667	77	1100	2500
	NJ28/630	8	2	630	780	88	671	94	1510	3690
	NJ19/630	9	0	630	850	100	689	169	2450	5240
	NJ29/630	9	2	630	850	128	689	216	3100	7080
	NJ10/630	0	0	630	920	128	699	292	3410	6200
	NJ20/630	0	2	630	920	170	699	411	4730	9500
	NJ30/630	0	3	630	920	212	699	503	6440	14300
	NJ12/630	2	1	630	1150	230	751	1129	8580	13700
670	**NJ18/670**	8	0	670	820	69	708	79	1530	3750
	NJ19/670	9	0	670	900	103	728	200	2330	4750
	NJ10/670	0	0	670	980	136	747	359	3740	6800
	NJ20/670	0	2	670	980	180	747	493	5390	11000
	NJ30/670	0	3	670	980	230	747	616	6600	14000
710	**NJ18/710**	8	0	710	870	74	751	98	1750	4400
	NJ19/710	9	0	710	950	106	774	221	2910	6370
	NJ29/710	9	2	710	950	140	774	286	3650	8530
	NJ10/710	0	0	710	1030	140	778	426	4680	8500
	NJ20/710	0	2	710	1030	185	778	554	5940	12000
750	**NJ18/750**	8	0	750	920	78	794	118	1470	3450
	NJ10/750	0	0	750	1090	150	830	503	4730	8800
	NJ20/750	0	2	750	1090	195	830	652	7040	14600
800	**NJ18/800**	8	0	800	980	82	846	149	1720	4150
	NJ10/800	0	0	800	1150	155	890	559	5180	10900
	NJ20/800	0	2	800	1150	200	882	734	7040	14600
850	**NJ28/850**	8	2	850	1030	106	900	180	2120	5960
	NJ19/850	9	0	850	1120	118	917	318	3630	8190
900	**NJ18/900**	8	0	900	1090	85	949	174	1980	4900
	NJ28/900	8	2	900	1090	112	949	241	2700	7200
	NJ19/900	9	0	900	1180	122	969	390	4130	8800

- warehouse - order - phone

Limiting speed [rpm]		Basic makes*								Bearing No.
grease	oil	-	M	TV	C2	C3	C4	K	NJP	
670	1000	✓	✓	✓	✓	✓	✓	✓	✓	**NJ20/530**
700	1000	✓	✓	✓	✓	✓	✓	✓	✓	**NJ30/530 E**
560	950	✓	✓	✓	✓	✓	✓	✓	✓	**NJ31/530**
850	1100	✓	✓	✓	✓	✓	✓	✓	✓	**NJ18/560**
830	1100	✓	✓	✓	✓	✓	✓	✓	✓	**NJ19/560**
780	1000	✓	✓	✓	✓	✓	✓	✓	✓	**NJ29/560**
540	600	✓	✓	✓	✓	✓	✓	✓	✓	**NJ10/560**
630	1000	✓	✓	✓	✓	✓	✓	✓	✓	**NJ20/560**
540	900	✓	✓	✓	✓	✓	✓	✓	✓	**NJ31/560**
560	800	✓	✓	✓	✓	✓	✓	✓	✓	**NJ12/560**
800	1000	✓	✓	✓	✓	✓	✓	✓	✓	**NJ18/600**
750	1000	✓	✓	✓	✓	✓	✓	✓	✓	**NJ28/600**
800	1050	✓	✓	✓	✓	✓	✓	✓	✓	**NJ19/600**
750	950	✓	✓	✓	✓	✓	✓	✓	✓	**NJ29/600**
700	900	✓	✓	✓	✓	✓	✓	✓	✓	**NJ10/600**
600	900	✓	✓	✓	✓	✓	✓	✓	✓	**NJ20/600**
600	900	✓	✓	✓	✓	✓	✓	✓	✓	**NJ30/600**
480	850	✓	✓	✓	✓	✓	✓	✓	✓	**NJ2/600**
800	1000	✓	✓	✓	✓	✓	✓	✓	✓	**NJ18/630**
650	850	✓	✓	✓	✓	✓	✓	✓	✓	**NJ28/630**
700	950	✓	✓	✓	✓	✓	✓	✓	✓	**NJ19/630**
680	850	✓	✓	✓	✓	✓	✓	✓	✓	**NJ29/630**
630	850	✓	✓	✓	✓	✓	✓	✓	✓	**NJ10/630**
560	850	✓	✓	✓	✓	✓	✓	✓	✓	**NJ20/630**
530	850	✓	✓	✓	✓	✓	✓	✓	✓	**NJ30/630**
450	700	✓	✓	✓	✓	✓	✓	✓	✓	**NJ12/630**
750	950	✓	✓	✓	✓	✓	✓	✓	✓	**NJ18/670**
630	850	✓	✓	✓	✓	✓	✓	✓	✓	**NJ19/670**
600	800	✓	✓	✓	✓	✓	✓	✓	✓	**NJ10/670**
500	800	✓	✓	✓	✓	✓	✓	✓	✓	**NJ20/670**
500	800	✓	✓	✓	✓	✓	✓	✓	✓	**NJ30/670**
700	900	✓	✓	✓	✓	✓	✓	✓	✓	**NJ18/710**
570	760	✓	✓	✓	✓	✓	✓	✓	✓	**NJ19/710**
600	800	✓	✓	✓	✓	✓	✓	✓	✓	**NJ29/710**
560	750	✓	✓	✓	✓	✓	✓	✓	✓	**NJ10/710**
480	700	✓	✓	✓	✓	✓	✓	✓	✓	**NJ20/710**
600	800	✓	✓	✓	✓	✓	✓	✓	✓	**NJ18/750**
430	670	✓	✓	✓	✓	✓	✓	✓	✓	**NJ10/750**
430	670	✓	✓	✓	✓	✓	✓	✓	✓	**NJ20/750**
530	700	✓	✓	✓	✓	✓	✓	✓	✓	**NJ18/800**
510	550	✓	✓	✓	✓	✓	✓	✓	✓	**NJ10/800**
400	630	✓	✓	✓	✓	✓	✓	✓	✓	**NJ20/800**
500	700	✓	✓	✓	✓	✓	✓	✓	✓	**NJ28/850**
500	650	✓	✓	✓	✓	✓	✓	✓	✓	**NJ19/850**
450	600	✓	✓	✓	✓	✓	✓	✓	✓	**NJ18/900**
450	600	✓	✓	✓	✓	✓	✓	✓	✓	**NJ28/900**
430	560	✓	✓	✓	✓	✓	✓	✓	✓	**NJ19/900**

* Other products also available



https://nppnovoteh.com

5. CYLINDRICAL ROLLER BEARINGS

5.2. Single-row cylindrical roller bearings - types - NJ, NJP



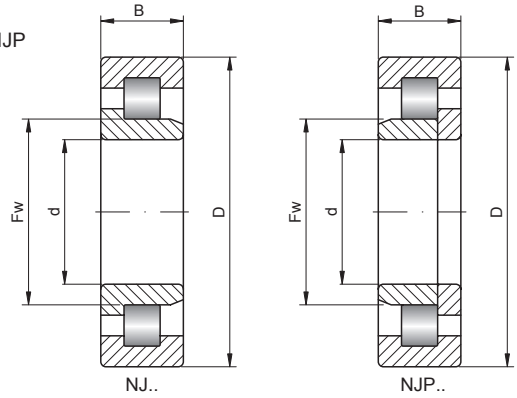

900 – 1700 mm

Shaft [mm]	Bearing No.	Series		Dimensions [mm]				Weight [kg]	Basic load ratings [kN]	
		SD	SB	d	D	B	Fw		dyn. C	stat. C_0
900 cont.	**NJ29/900**	9	2	900	1180	165	969	575	5830	14000
950	**NJ38/950**	8	3	950	1150	150	1002	320	4030	12100
	NJ29/950	9	2	950	1250	175	1024	765	5830	14000
1000	**NJ18/1000**	8	0	1000	1220	100	1053	272	2640	6550
	NJ28/1000	8	2	1000	1220	128	1053	354	3690	10000
	NJ29/1000	9	2	1000	1320	185	1082	718	7040	17300
1060	**NJ29/1060**	9	2	1060	1400	195	1146	893	7210	17300
	NJ39/1060	9	3	1060	1400	250	1146	1098	9130	24000
1120	**NJ18/1120**	8	0	1120	1360	106	1182	344	3410	8650
	NJ30/1120	0	3	1120	1580	345	1231	2207	15700	39000
1180	**NJ18/1180**	8	0	1180	1420	106	1242	359	3030	7800
	NJ29/1180	9	2	1180	1540	206	1258	1119	8970	21600
1320	**NJ18/1320**	8	0	1320	1600	122	1395	544	3800	10000
	NJ29/1320	9	2	1320	1720	230	1420	1539	11400	30500
1600	**NJ18/1600**	8	0	1600	1950	155	1694	1012	7060	20100
1700	**NJ18/1700**	8	0	1700	2060	160	1784	1180	7210	19300

- warehouse - order - phone

Limiting speed [rpm]		Basic makes*								Bearing No.
grease	oil	-	M	TV	C2	C3	C4	K	NJP	
430	560	✓	✓	✓	✓	✓	✓	✓	✓	**NJ29/900**
400	600	✓	✓	✓	✓	✓	✓	✓	✓	**NJ38/950**
400	530	✓	✓	✓	✓	✓	✓	✓	✓	**NJ29/950**
400	530	✓	✓	✓	✓	✓	✓	✓	✓	**NJ18/1000**
400	530	✓	✓	✓	✓	✓	✓	✓	✓	**NJ28/1000**
360	480	✓	✓	✓	✓	✓	✓	✓	✓	**NJ29/1000**
280	340	✓	✓	✓	✓	✓	✓	✓	✓	**NJ29/1060**
260	320	✓	✓	✓	✓	✓	✓	✓	✓	**NJ39/1060**
280	340	✓	✓	✓	✓	✓	✓	✓	✓	**NJ18/1120**
190	240	✓	✓	✓	✓	✓	✓	✓	✓	**NJ30/1120**
260	320	✓	✓	✓	✓	✓	✓	✓	✓	**NJ18/1180**
190	240	✓	✓	✓	✓	✓	✓	✓	✓	**NJ29/1180**
260	340	✓	✓	✓	✓	✓	✓	✓	✓	**NJ18/1320**
240	320	✓	✓	✓	✓	✓	✓	✓	✓	**NJ29/1320**
200	240	✓	✓	✓	✓	✓	✓	✓	✓	**NJ18/1600**
160	200	✓	✓	✓	✓	✓	✓	✓	✓	**NJ18/1700**

* Other products also available



https://nppnovoteh.com

5. CYLINDRICAL ROLLER BEARINGS

5.3. Single-row cylindrical roller bearings - types - NH, NUJ



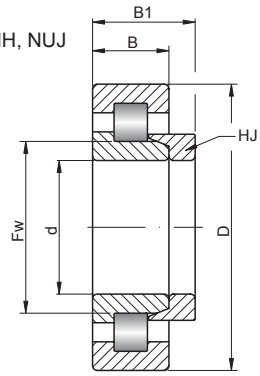

NH..

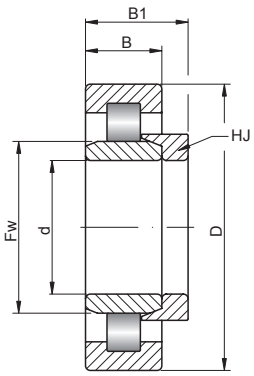

NUJ..

15 – 60 mm

Shaft [mm]	Bearing No.	Ring	Series		Dimensions [mm]						Weight [kg]	
			SD	SB	d	Fw	D	B	B1	B2	HJ...	NH...
15	**NH202 E**	HJ202 E	2	0	15	19	35	11	2,5	5	0,005	0,053
	NH302 E	HJ302 E	3	0	15	21	42	13	3	5,5	0,008	0,096
17	**NH203 E**	HJ203 E	2	0	17	22	40	12	3	5,5	0,009	0,078
	NH2203 E	HJ2203 E	2	2	17	22	40	16	3	5,5	0,012	0,104
	NH303 E	HJ303 E	3	0	17	24	47	14	3	5,5	0,011	0,131
20	**NH204 E**	HJ204 E	2	0	20	27	47	14	3	6,75	0,012	0,124
	NH2204 E	HJ2204 E	2	2	20	27	47	18	3	6,5	0,012	0,158
	NH304 E	HJ304 E	3	0	20	28	52	15	4	6,5	0,017	0,170
	NH2304 E	HJ2304 E	3	2	20	28	52	21	4	7,5	0,018	0,233
25	**NH205 E**	HJ205 E	2	0	25	32	52	15	3	6	0,014	0,152
	NH2205 E	HJ2205 E	2	2	25	32	52	18	3	6,5	0,014	0,180
	NH305 E	HJ305 E	3	0	25	34	62	17	4	7	0,025	0,268
	NH2305 E	HJ2305 E	3	2	25	34	62	24	4	8	0,026	0,376
30	**NH206 E**	HJ206 E	2	0	30	38	62	16	4	7	0,025	0,234
	NH2206 E	HJ2206 E	2	2	30	38	62	20	4	7,5	0,025	0,287
	NH306 E	HJ306 E	3	0	30	41	72	19	5	8,5	0,042	0,403
	NH2306 E	HJ2306 E	3	2	30	41	72	27	5	9,5	0,043	0,577
	NH406	HJ406	4	0	30	45	90	23	7	11,5	0,08	0,833
35	**NH207 E**	HJ207 E	2	0	35	44	72	17	4	7	0,033	0,339
	NH2207 E	HJ2207 E	2	2	35	44	72	23	4	8,5	0,035	0,439
	NH307 E	HJ307 E	3	0	35	46	80	21	6	9,5	0,06	0,542
	NH2307 E	HJ2307 E	3	2	35	46	80	31	6	11	0,062	0,791
	NH407	HJ407	4	0	35	53	100	25	8	13	0,12	1,140
40	**NH208 E**	HJ208 E	2	0	40	50	80	18	5	8,5	0,049	0,433
	NH2208 E	HJ2208 E	2	2	40	50	80	23	5	9	0,05	0,540
	NH308 E	HJ308 E	3	0	40	52	90	23	7	11	0,088	0,752
	NH2308 E	HJ2308 E	3	2	40	52	90	33	7	12,5	0,091	1,053
	NH408	HJ408	4	0	40	58	110	27	8	13	0,14	1,440
45	**NH209 E**	HJ209 E	2	0	45	55	85	19	5	8,5	0,055	0,494
	NH2209 E	HJ2209 E	2	2	45	55	85	23	5	9	0,055	0,591
	NH309 E	HJ309 E	3	0	45	59	100	25	7	11,5	0,11	1,019
	NH2309 E	HJ2309 E	3	2	45	59	100	36	7	13	0,113	1,433
	NH409	HJ409	4	0	45	65	120	29	8	13,5	0,175	1,815
50	**NH210 E**	HJ210 E	2	0	50	60	90	20	5	9	0,061	0,558
	NH2210 E	HJ2210 E	2	2	50	60	90	23	5	9	0,061	0,641
	NH310 E	HJ310 E	3	0	50	65	110	27	8	13	0,151	1,301
	NH2310 E	HJ2310 E	3	2	50	65	110	40	8	14,5	0,155	1,915
	NH410	HJ410	4	0	50	71	130	31	9	14,5	0,23	2,240
55	**NH211 E**	HJ211 E	2	0	55	66	100	21	6	9,5	0,087	0,737
	NH2211 E	HJ2211 E	2	2	55	66	100	25	6	10	0,088	0,894
	NH311 E	HJ311 E	3	0	55	71	120	29	9	14	0,195	1,695
	NH2311 E	HJ2311 E	3	2	55	71	120	43	9	15,5	0,2	2,450
	NH411	HJ411	4	0	55	77	140	33	10	16,5	0,29	2,800
60	**NH212 E**	HJ212 E	2	0	60	72	110	22	6	10	0,108	0,938
	NH2212 E	HJ2212 E	2	2	60	72	110	28	6	10	0,108	1,198
	NH312 E	HJ312 E	3	0	60	77	130	31	9	14,5	0,231	2,101

- warehouse - order - phone

Basic load ratings [kN]		Limiting speed [rpm]		Basic makes*								Bearing No.
dyn. C	stat. C_0	grease	oil	-	M	TV	C2	C3	C4	K	NUJ	
12,7	10,4	19000	22000	●	●	●	●	◴	◴	●	●	**NH202 E**
19,4	15,3	16000	19000	●	●	●	●	◴	◴	●	●	**NH302 E**
17,6	14,6	17000	20000	●	●	●	●	◴	◴	●	●	**NH203 E**
24	22	16000	18500	●	●	●	●	◴	◴	●	●	**NH2203 E**
25,5	21,2	14000	17000	●	●	●	●	◴	◴	●	●	**NH303 E**
25,7	22,6	15000	18000	●	●	●	●	◴	◴	●	●	**NH204 E**
30,6	28,3	13000	18000	●	●	●	●	◴	◴	●	●	**NH2204 E**
31,5	26,9	12000	16000	●	●	●	●	◴	◴	●	●	**NH304 E**
42	38,8	11000	16000	●	●	●	●	◴	◴	●	●	**NH2304 E**
29,3	27,7	13000	15000	●	●	●	●	◴	◴	●	●	**NH205 E**
34,9	34,6	12000	15000	●	●	●	●	◴	◴	●	●	**NH2205 E**
41,6	37,4	10000	14000	●	●	●	●	◴	◴	●	●	**NH305 E**
57	56,1	9100	14000	●	●	●	●	◴	◴	●	●	**NH2305 E**
39,1	37,4	11000	13000	●	●	●	●	◴	◴	●	●	**NH206 E**
48,9	49,8	9700	13000	●	●	●	●	◴	◴	●	●	**NH2206 E**
53,1	50,2	8700	12000	●	●	●	●	◴	◴	●	●	**NH306 E**
74,6	77,6	7800	12000	●	●	●	●	◴	◴	●	●	**NH2306 E**
62,8	55	7600	10000	●	◴	●	●	◴	◴	●	●	**NH406**
50,2	50,2	9300	11000	●	●	●	●	◴	◴	●	●	**NH207 E**
61,6	65,3	8300	11000	●	●	●	●	◴	◴	●	●	**NH2207 E**
66,6	65,4	7700	10000	●	●	●	●	◴	◴	●	●	**NH307 E**
93,1	101	6900	10000	●	●	●	●	◴	◴	●	●	**NH2307 E**
75,2	68,9	6600	8800	●	◴	●	●	◴	◴	●	●	**NH407**
55,7	55,4	8300	9900	●	●	●	●	◴	◴	●	●	**NH208 E**
72,3	77,6	7400	9900	●	●	●	●	◴	◴	●	●	**NH2208 E**
83,1	81,5	6800	9100	●	●	●	●	◴	◴	●	●	**NH308 E**
114	122	6100	9100	●	●	●	●	◴	◴	●	●	**NH2308 E**
97,1	89,1	6000	8000	●	◴	●	●	◴	◴	●	●	**NH408**
63,1	66,4	7600	9200	●	●	●	●	◴	◴	●	●	**NH209 E**
76,1	84,6	6900	9200	●	●	●	●	◴	◴	●	●	**NH2209 E**
97,4	98,3	6100	8200	●	●	●	●	◴	◴	●	●	**NH309 E**
137	153	5400	8200	●	●	●	●	◴	◴	●	●	**NH2309 E**
115	112	5400	7200	●	◴	●	●	◴	◴	●	●	**NH409**
66,1	71,9	7100	8500	●	●	●	●	◴	◴	●	●	**NH210 E**
79,7	91,5	6400	8500	●	●	●	●	◴	◴	●	●	**NH2210 E**
110	113	5500	7400	●	◴	●	●	◴	◴	●	●	**NH310 E**
163	187	4900	7400	●	◴	●	●	◴	◴	●	●	**NH2310 E**
139	136	4900	6600	●	◴	●	●	◴	◴	●	●	**NH410**
86,4	98,7	6400	7700	●	●	●	●	◴	◴	●	●	**NH211 E**
101	122	5800	7700	◴	◴	●	●	◴	◴	●	●	**NH2211 E**
137	143	5100	6700	●	◴	●	●	◴	◴	●	●	**NH311 E**
201	233	4500	6700	●	◴	●	●	◴	◴	●	●	**NH2311 E**
142	138	4600	6100	●	◴	●	●	◴	◴	●	●	**NH411**
97,7	107	5800	6900	●	◴	●	●	◴	◴	●	●	**NH212 E**
131	157	5200	6900	◴	◴	●	●	◴	◴	●	●	**NH2212 E**
150	157	4600	6200	●	◴	●	●	◴	◴	●	●	**NH312 E**

* Other products also available

https://nppnovoteh.com

5. CYLINDRICAL ROLLER BEARINGS

5.3. Single-row cylindrical roller bearings - types - NH, NUJ



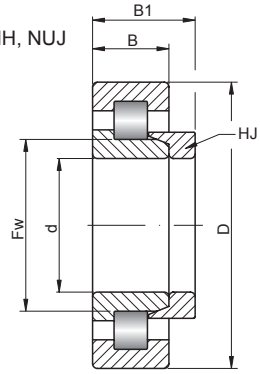

NH..

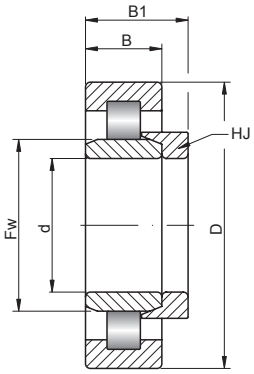

NUJ..

60 – 110 mm

Shaft [mm]	Bearing No.	Ring	Series		Dimensions [mm]						Weight [kg]	
			SD	SB	d	Fw	D	B	B1	B2	HJ...	NH...
60 cont.	**NH2312 E**	HJ2312 E	3	2	60	77	130	46	9	16	0,237	3,047
	NH412	HJ412	4	0	60	83	150	35	10	16,5	0,34	3,360
65	**NH213 E**	HJ213 E	2	0	65	79	120	23	6	10	0,129	1,179
	NH2213 E	HJ2213 E	2	2	65	79	120	31	6	10,5	0,131	1,581
	NH313 E	HJ313 E	3	0	65	83	140	33	10	15,5	0,288	2,598
	NH2313 E	HJ2313 E	3	2	65	83	140	48	10	18	0,298	3,658
	NH413	HJ413	4	0	65	89	160	37	11	18	0,42	4,000
70	**NH214 E**	HJ214 E	2	0	70	84	125	24	7	11	0,157	1,317
	NH2214 E	HJ2214 E	2	2	70	84	125	31	7	11,5	0,158	1,688
	NH314 E	HJ314 E	3	0	70	89	150	35	10	15,5	0,33	3,140
	NH2314 E	HJ2314 E	3	2	70	89	150	51	10	18,5	0,345	4,425
	NH414	HJ414	4	0	70	100	180	42	12	20	0,605	5,865
75	**NH215 E**	HJ215 E	2	0	75	89	130	25	7	11	0,166	1,456
	NH2215 E	HJ2215 E	2	2	75	89	130	31	7	11,5	0,167	1,777
	NH315 E	HJ315 E	3	0	75	95	160	37	11	16,5	0,41	3,780
	NH2315 E	HJ2315 E	3	2	75	95	160	55	11	19,5	0,43	5,430
	NH415	HJ415	4	0	75	105	190	45	13	21,5	0,71	6,960
80	**NH216 E**	HJ216 E	2	0	80	95	140	26	8	12,5	0,222	1,782
	NH2216 E	HJ2216 E	2	2	80	95	140	33	8	12,5	0,222	2,252
	NH316 E	HJ316 E	3	0	80	101	170	39	11	17	0,46	4,460
	NH2316 E	HJ2316 E	3	2	80	101	170	58	11	20	0,48	6,430
	NH416	HJ416	4	0	80	110	200	48	13	22	0,78	8,060
85	**NH217 E**	HJ217 E	2	0	85	101	150	28	8	12,5	0,25	2,190
	NH2217 E	HJ2217 E	2	2	85	101	150	36	8	13	0,252	2,782
	NH317 E	HJ317 E	3	0	85	108	180	41	12	18,5	0,575	5,375
	NH2317 E	HJ2317 E	3	2	85	108	180	60	12	22	0,595	7,575
	NH417	HJ417	4	0	85	113	210	52	14	24	0,88	9,560
90	**NH218 E**	HJ218 E	2	0	90	107	160	30	9	14	0,32	2,700
	NH2218 E	HJ2218 E	2	2	90	107	160	40	9	15	0,325	3,535
	NH318 E	HJ318 E	3	0	90	114	190	43	12	18,5	0,63	6,100
	NH2318 E	HJ2318 E	3	2	90	114	190	64	12	22	0,66	8,780
	NH418	HJ418	4	0	90	124	225	54	14	24	1,05	11,350
95	**NH219 E**	HJ219 E	2	0	95	113	170	32	9	14	0,355	3,275
	NH2219 E	HJ2219 E	2	2	95	113	170	43	9	15,5	0,365	4,295
	NH319 E	HJ319 E	3	0	95	122	200	45	13	20,5	0,785	7,205
	NH2319 E	HJ2319 E	3	2	95	122	200	67	13	26,5	0,76	10,150
	NH419	HJ419	4	0	95	134	240	55	15	25,5	1,3	14,900
100	**NH220 E**	HJ220 E	2	0	100	119	180	34	10	15	0,435	3,955
	NH2220 E	HJ2220 E	2	2	100	119	180	46	10	16	0,45	5,270
	NH320 E	HJ320 E	3	0	100	128	215	47	13	20,5	0,89	8,640
	NH2320 E	HJ2320 E	3	2	100	128	215	73	13	23,5	0,92	13,020
	NH420	HJ420	4	0	100	139	250	58	16	27	1,5	15,500
105	**NH221 E**	HJ221 E	2	0	105	126	190	36	10	16	0,51	4,510
	NH321 E	HJ321 E	3	0	105	133	225	49	13	20,5	0,97	9,730
	NH421	HJ421	4	0	105	145	260	60	16	27	1,65	20,750
110	**NH222 E**	HJ222 E	2	0	110	133	200	38	11	17	0,62	5,520

- warehouse - order - phone

Basic load ratings [kN]		Limiting speed [rpm]		Basic makes*								Bearing No.
dyn. C	stat. C_0	grease	oil	-	M	TV	C2	C3	C4	K	NUJ	
223	262	4100	6200	●	◴	●	●	◴	◴	●	●	**NH2312 E**
178	184	4200	5700	●	◴	●	●	◴	◴	●	●	**NH412**
108	119	5300	6400	●	◴	●	●	◴	◴	●	●	**NH213 E**
149	181	4800	6400	◴	◴	●	●	◴	◴	●	●	**NH2213 E**
181	191	4300	5700	●	◴	●	●	◴	◴	●	●	**NH313 E**
251	287	3800	5700	●	◴	●	●	◴	◴	●	●	**NH2313 E**
198	203	4000	5300	●	◴	●	●	◴	◴	●	●	**NH413**
119	137	5000	6000	●	◴	●	●	◴	◴	●	●	**NH214 E**
156	194	4500	6000	◴	◴	●	●	◴	◴	●	●	**NH2214 E**
205	222	4000	5300	●	◴	●	●	◴	◴	●	●	**NH314 E**
275	323	3600	5300	●	◴	●	●	◴	◴	●	●	**NH2314 E**
246	257	3500	4700	●	◴	●	●	◴	◴	●	●	**NH414**
130	156	4800	5700	●	◴	●	●	◴	◴	●	●	**NH215 E**
162	207	4300	5700	◴	◴	●	●	◴	◴	●	●	**NH2215 E**
240	263	3700	5000	●	◴	●	●	◴	◴	●	●	**NH315 E**
329	395	3300	5000	●	◴	●	●	◴	◴	●	●	**NH2315 E**
265	274	3300	4400	●	◴	●	●	◴	◴	●	●	**NH415**
139	167	4400	5300	●	◴	●	●	◴	◴	●	●	**NH216 E**
186	243	4000	5300	◴	◴	●	●	◴	◴	●	●	**NH2216 E**
259	282	3500	4700	●	◴	●	●	◴	◴	●	●	**NH316 E**
361	431	3100	4700	●	◴	●	●	◴	◴	●	●	**NH2316 E**
302	315	3100	4200	●	◴	●	●	◴	◴	●	●	**NH416**
167	199	4200	5000	●	◴	●	●	◴	◴	●	●	**NH217 E**
218	279	3700	5000	◴	◴	●	●	◴	◴	●	●	**NH2217 E**
291	330	3300	4400	●	◴	●	●	◴	◴	●	●	**NH317 E**
394	485	2900	4400	●	◴	●	●	◴	◴	●	●	**NH2317 E**
340	350	3000	4000	●	◴	●	●	◴	◴	●	●	**NH417**
182	217	3900	4700	●	◴	●	●	◴	◴	●	●	**NH218 E**
242	314	3500	4700	◴	◴	●	●	◴	◴	●	●	**NH2218 E**
316	355	3100	4100	●	◴	●	●	◴	◴	●	●	**NH318 E**
437	534	2800	4100	●	◴	●	●	◴	◴	●	●	**NH2318 E**
374	400	2800	3700	●	◴	●	●	◴	◴	●	●	**NH418**
221	265	3700	4400	●	◴	●	●	◴	◴	●	●	**NH219 E**
287	371	3300	4400	◴	◴	●	●	◴	◴	●	●	**NH2219 E**
334	387	2900	3900	●	◴	●	●	◴	◴	●	●	**NH319 E**
394	496	2600	4000	◴	◴	●	●	◴	◴	●	●	**NH2319 E**
410	444	2600	3400	●	◴	●	●	◴	◴	●	●	**NH419**
250	306	3500	4200	●	◴	●	●	◴	◴	●	●	**NH220 E**
334	444	3100	4200	◴	◴	●	●	◴	◴	●	●	**NH2220 E**
379	424	2700	3600	●	◴	●	●	◴	◴	●	●	**NH320 E**
570	717	2400	3600	◴	◴	●	●	◴	◴	●	●	**NH2320 E**
458	498	2500	3300	●	◴	●	●	◴	◴	●	●	**NH420**
201	241	3300	3900	◴	◴	●	●	◴	◴	●	●	**NH221 E**
440	500	2600	3500	◴	◴	●	●	◴	◴	●	●	**NH321 E**
471	510	2400	3100	●	◴	●	●	◴	◴	●	●	**NH421**
293	365	3100	3700	◴	◴	●	●	◴	◴	●	●	**NH222 E**

* Other products also available

https://nppnovoteh.com

5. CYLINDRICAL ROLLER BEARINGS

5.3. Single-row cylindrical roller bearings - types - NH, NUJ



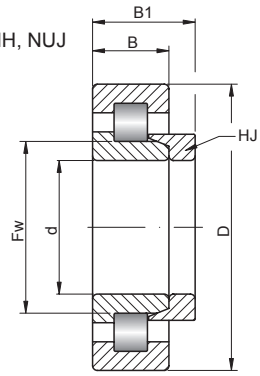

NH..

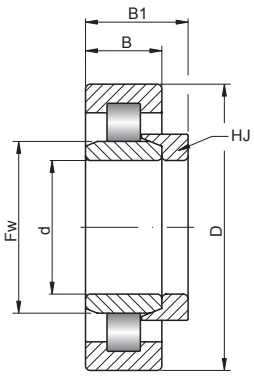

NUJ..

110 – 200 mm

Shaft [mm]	Bearing No.	Ring	Series		Dimensions [mm]						Weight [kg]	
			SD	SB	d	Fw	D	B	B1	B2	HJ...	NH...
110 cont.	**NH2222 E**	HJ2222 E	2	2	110	133	200	53	11	19,5	0,645	7,575
	NH322 E	HJ322 E	3	0	110	143	240	50	14	22	1,21	11,910
	NH2322 E	HJ2322 E	3	2	110	143	240	80	14	26,5	1,27	20,070
	NH422	HJ422	4	0	110	155	280	65	17	29,5	2,1	22,000
120	**NH224 E**	HJ224 E	2	0	120	144	215	40	11	17	0,71	6,560
	NH2224 E	HJ2224 E	2	2	120	144	215	58	11	20	0,745	9,305
	NH324 E	HJ324 E	3	0	120	154	260	55	14	22,5	1,41	14,810
	NH2324 E	HJ2324 E	3	2	120	154	260	86	14	26	1,46	24,560
	NH424	HJ424	4	0	120	170	310	72	17	30,5	2,6	30,600
130	**NH226 E**	HJ226 E	2	0	130	154	230	40	11	17	0,79	7,390
	NH2226 E	HJ2226 E	2	2	130	154	230	64	11	21	0,84	12,040
	NH326 E	HJ326 E	3	0	130	167	280	58	14	23	1,65	18,350
	NH2326 E	HJ2326 E	3	2	130	167	280	93	14	28	1,73	30,830
	NH426	HJ426	4	0	130	185	340	78	18	32	3,3	39,400
140	**NH228 E**	HJ228 E	2	0	140	169	250	42	11	18	0,99	9,490
	NH2228 E	HJ2228 E	2	2	140	169	250	68	11	23	1,07	15,370
	NH328 E	HJ328 E	3	0	140	180	300	62	15	25	2,04	22,440
	NH2328 E	HJ2328 E	3	2	140	180	300	102	15	31	2,14	38,940
	NH428	HJ428	4	0	140	198	360	82	18	33	3,75	50,550
150	**NH230 E**	HJ230 E	2	0	150	182	270	45	12	19,5	1,26	11,960
	NH2230 E	HJ2230 E	2	2	150	182	270	73	12	24,5	1,35	20,050
	NH330 E	HJ330 E	3	0	150	193	320	65	15	25	2,35	29,350
	NH2330 E	HJ2330 E	3	2	150	193	320	108	15	31,5	2,48	47,180
	NH430	HJ430	4	0	150	213	380	85	20	36,5	4,7	58,000
160	**NH232 E**	HJ232 E	2	0	160	195	290	48	12	20	1,48	16,280
	NH2232 E	HJ2232 E	2	2	160	193	290	80	12	24,5	1,55	25,150
	NH332 E	HJ332 E	3	0	160	204	340	68	15	25	2,59	34,590
	NH2332 E	HJ2332 E	3	2	160	204	340	114	15	32	2,76	55,860
170	**NH1034**	HJ1034	0	0	170	193	260	42	11	21	0,94	8,840
	NH234 E	HJ234 E	2	0	170	207	310	52	12	20	1,7	20,300
	NH2234 E	HJ2234 E	2	2	170	205	310	86	12	24	1,79	30,990
	NH2334	HJ2334	3	2	170	220	360	120	16	38,5	3,85	66,450
	NH334 E	HJ334 E	3	0	170	218	361	73	16	29,5	3,25	41,850
180	**NH1036**	HJ1036	0	0	180	205	280	46	12	22,5	1,2	11,700
	NH236 E	HJ236 E	2	0	180	217	320	52	12	20	1,79	21,090
	NH2236 E	HJ2236 E	2	2	180	215	320	86	12	24	1,88	32,280
	NH336 E	HJ336 E	3	0	180	231	380	75	17	28,5	3,85	46,450
	NH2336	HJ2336	3	2	180	232	380	126	17	40	4,6	77,600
190	**NH1038**	HJ1038	0	0	190	215	290	46	12	22,5	1,25	12,150
	NH238 E	HJ238 E	2	0	190	230	340	55	13	21,5	2,19	25,490
	NH2238 E	HJ2238 E	2	2	190	228	340	92	13	26,5	2,31	39,310
	NH338 E	HJ338 E	3	0	190	245	400	78	18	29	4,45	54,350
	NH2338 E	HJ2338 E	3	2	190	245	400	132	18	36,5	4,87	89,570
200	**NH1040**	HJ1040	0	0	200	229	310	51	13	25,5	1,65	15,750
	NH240 E	HJ240 E	2	0	200	243	360	58	14	23	2,65	29,850
	NH2240 E	HJ2240 E	2	2	200	241	360	98	14	28	2,78	47,180
	NH340 E	HJ340 E	3	0	200	258	420	80	18	30	5	61,200

- warehouse - order - phone

https://nppnovoteh.com

Basic load ratings [kN]		Limiting speed [rpm]		Basic makes*								Bearing No.
dyn. C	stat. C_0	grease	oil	-	M	TV	C2	C3	C4	K	NUJ	
384	517	2800	3700	◴	◴	◝	◝	◴	◴	◝	◝	**NH2222 E**
451	525	2400	3200	◴	◴	◝	◝	◴	◴	◝	◝	**NH322 E**
680	880	2200	3200	◴	◴	◝	◝	◴	◴	◝	◝	**NH2322 E**
550	621	2200	2900	◓	◴	◝	◝	◴	◴	◝	◝	**NH422**
336	421	2800	3400	◴	◴	◝	◝	◴	◴	◝	◝	**NH224 E**
452	619	2600	3400	◴	◴	◝	◝	◴	◴	◝	◝	**NH2224 E**
528	610	2200	3000	◴	◴	◝	◝	◴	◴	◝	◝	**NH324 E**
793	1030	2000	3000	◴	◴	◝	◝	◴	◴	◝	◝	**NH2324 E**
690	770	1900	2600	◓	◴	◝	◝	◴	◴	◝	◝	**NH424**
364	453	2600	3200	◴	◴	◝	◝	◴	◴	◝	◝	**NH226 E**
530	737	2400	3200	◝	◝	◝	◝	◝	◝	◝	◝	**NH2226 E**
616	736	2000	2700	◴	◴	◝	◝	◴	◴	◝	◝	**NH326 E**
920	1230	1800	2700	◴	◴	◝	◝	◴	◴	◝	◝	**NH2326 E**
771	876	1800	2300	◓	◴	◝	◝	◴	◴	◝	◝	**NH426**
392	514	2400	2900	◴	◴	◝	◝	◴	◴	◝	◝	**NH228 E**
572	835	2200	2900	◝	◝	◝	◝	◝	◝	◝	◝	**NH2228 E**
663	797	1900	2500	◴	◴	◝	◝	◴	◴	◝	◝	**NH328 E**
1020	1380	1700	2500	◝	◝	◝	◝	◝	◝	◝	◝	**NH2328 E**
874	1020	1600	2200	◴	◴	◝	◝	◴	◴	◝	◝	**NH428**
448	594	2200	2600	◴	◴	◝	◝	◴	◴	◝	◝	**NH230 E**
662	982	2000	2600	◝	◝	◝	◝	◝	◝	◝	◝	**NH2230 E**
757	922	1700	2300	◴	◴	◝	◝	◴	◴	◝	◝	**NH330 E**
1180	1600	1500	2300	◝	◝	◝	◝	◝	◝	◝	◝	**NH2330 E**
930	1120	1500	2000	◴	◴	◝	◝	◴	◴	◝	◝	**NH430**
498	666	2000	2400	◴	◴	◝	◝	◴	◴	◝	◝	**NH232 E**
809	1190	1800	2400	◝	◝	◝	◝	◝	◝	◝	◝	**NH2232 E**
857	1050	1600	2100	◝	◝	◝	◝	◝	◝	◝	◝	**NH332 E**
1310	1820	1400	2100	◝	◝	◝	◝	◝	◝	◝	◝	**NH2332 E**
276	400	2400	2800	◴	◴	◝	◝	◴	◴	◝	◝	**NH1034**
603	802	1900	2200	◴	◴	◝	◝	◴	◴	◝	◝	**NH234 E**
967	1410	1700	2200	◝	◝	◝	◝	◝	◝	◝	◝	**NH2234 E**
1220	1750	1300	2000	◝	◝	◝	◝	◝	◝	◝	◝	**NH2334**
809	1010	1500	2000	◝	◝	◝	◝	◝	◝	◝	◝	**NH334 E**
356	503	2200	2600	◴	◴	◝	◝	◴	◴	◝	◝	**NH1036**
626	852	1800	2100	◴	◴	◝	◝	◴	◴	◝	◝	**NH236 E**
1010	1510	1600	2100	◝	◝	◝	◝	◝	◝	◝	◝	**NH2236 E**
917	1150	1400	1900	◝	◝	◝	◝	◝	◝	◝	◝	**NH336 E**
1350	1940	1300	1900	◝	◝	◝	◝	◝	◝	◝	◝	**NH2336**
366	530	2100	2500	◴	◴	◝	◝	◴	◴	◝	◝	**NH1038**
694	954	1700	2000	◴	◴	◝	◝	◴	◴	◝	◝	**NH238 E**
1100	1670	1500	2000	◝	◝	◝	◝	◝	◝	◝	◝	**NH2238 E**
987	1260	1300	1800	◝	◝	◝	◝	◝	◝	◝	◝	**NH338 E**
1520	2220	1200	1800	◝	◝	◝	◝	◝	◝	◝	◝	**NH2338 E**
388	582	1900	2300	◴	◴	◝	◝	◴	◴	◝	◝	**NH1040**
766	1060	1600	1900	◴	◴	◝	◝	◴	◴	◝	◝	**NH240 E**
1220	1870	1400	1900	◝	◝	◝	◝	◝	◝	◝	◝	**NH2240 E**
987	1270	1200	1700	◝	◝	◝	◝	◝	◝	◝	◝	**NH340 E**

* Other products also available

https://nppnovoteh.com

5. CYLINDRICAL ROLLER BEARINGS

5.3. Single-row cylindrical roller bearings - types - NH, NUJ



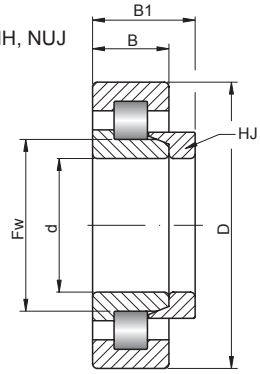

NH..

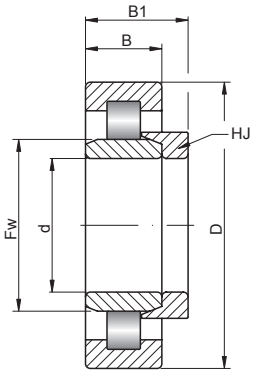

NUJ..

200 – 500 mm

Shaft [mm]	Bearing No.	Ring	Series		Dimensions [mm]						Weight [kg]	
			SD	SB	d	Fw	D	B	B1	B2	HJ...	NH...
200 cont.	**NH2340 E**	HJ2340 E	3	2	200	253	420	138	18	37	5,28	102,680
220	**NH1044**	HJ1044	0	0	220	250	340	56	14	27	2,1	20,600
	NH244 E	HJ244 E	2	0	220	268	400	65	15	25	3,55	42,050
	NH2244 E	HJ2244	2	2	220	259	400	108	15	29	3,55	64,450
	NH344	HJ344	3	0	220	284	460	88	20	36	7,05	81,450
	NH2344 E	HJ2344 E	3	2	220	275	460	145	20	40	6,8	125,800
240	**NH1048**	HJ1048	0	0	240	270	360	56	14	27	2,25	22,350
	NH248 E	HJ248 E	2	0	240	293	440	72	16	27	4,65	56,750
	NH2248	HJ2248	2	2	240	295	440	120	16	38,5	4,65	87,150
	NH348 E	HJ348 E	3	0	240	306	500	95	22	35,5	8,2	102,800
	NH2348	HJ2348	3	2	240	303	500	155	22	52	10,5	162,500
260	**NH1052**	HJ1052	0	0	260	296	400	65	16	31,5	3,3	32,500
	NH252 E	HJ252 E	2	0	260	317	480	80	18	30	6,2	75,200
	NH2252	HJ2252	2	2	260	320	480	130	16	38,5	4,65	111,650
	NH352	HJ352	3	0	260	337	540	102	18	40,5	9,8	129,800
280	**NH1056**	HJ1056	0	0	280	316	420	65	16	31,5	3,55	38,750
	NH256	HJ256	2	0	280	337	500	80	18	33	7,15	79,850
	NH2256 E	HJ2256 E	2	2	280	327	500	130	18	38	4,65	118,650
	NH356 E	HJ356 E	3	0	280	362	580	108	26	42,5	13,8	158,800
	NH2356	HJ2356	3	2	280	362	580	175	26	58,5	14	245,000
300	**NH1060**	HJ1060	0	0	300	340	460	74	19	36	5,15	49,250
	NH260	HJ260	2	0	300	364	540	85	20	34,5	7,4	98,100
	NH2260	HJ2260	2	2	300	364	540	140	16	38,5	4,65	142,650
320	**NH1064**	HJ1064	0	0	320	360	480	74	19	36	5,45	53,850
	NH264	HJ264	2	0	320	390	580	92	21	37	11,3	125,300
	NH2264	HJ2264	2	2	320	390	580	150	16	38,5	4,65	176,650
340	**NH1068**	HJ1068	0	0	340	385	520	82	21	39,5	7,2	71,300
360	**NH1072**	HJ1072	0	0	360	405	540	82	21	39,5	7,55	74,650
380	**NH1076**	HJ1076	0	0	380	425	560	82	21	39,5	7,95	78,050
400	**NH1080**	HJ1080	0	0	400	450	600	90	23	43	10,5	101,500
420	**NH1084**	HJ1084	0	0	420	470	620	90	23	43	11	105,600
440	**NH1088**	HJ1088	0	0	440	493	650	94	24	45	12	121,000
460	**NH1092**	HJ1092	0	0	460	516	680	100	25	48	14	141,000
480	**NH1096**	HJ1096	0	0	480	536	700	100	25	48	14,5	148,500
500	**NH10/500**	HJ10/500	0	0	500	556	720	100	25	48	15	156,000

- warehouse - order - phone

Basic load ratings [kN]		Limiting speed [rpm]		Basic makes*								Bearing No.
dyn. C	stat. C_0	grease	oil	-	M	TV	C2	C3	C4	K	NUJ	
1520	2240	1100	1700	●	●	●	●	●	●	●	●	**NH2340 E**
507	748	1700	2000	◴	◴	●	●	◴	◴	●	●	**NH1044**
766	1080	1400	1700	●	●	●	●	●	●	●	●	**NH244 E**
1130	1810	1200	1700	●	●	●	●	●	●	●	●	**NH2244 E**
1200	1570	1100	1500	●	●	●	●	●	●	●	●	**NH344**
1810	2690	1000	1500	●	●	●	●	●	●	●	●	**NH2344 E**
535	822	1600	1900	●	●	●	●	●	●	●	●	**NH1048**
949	1340	1200	1500	●	●	●	●	●	●	●	●	**NH248 E**
1430	2320	1100	1500	●	●	●	●	●	●	●	●	**NH2248**
1430	1950	990	1300	●	●	●	●	●	●	●	●	**NH348 E**
2170	3320	900	1400	●	●	●	●	●	●	●	●	**NH2348**
651	979	1400	1700	●	●	●	●	●	●	●	●	**NH1052**
1100	1580	1100	1300	●	●	●	●	●	●	●	●	**NH252 E**
1790	2950	990	1300	●	●	●	●	●	●	●	●	**NH2252**
1900	2600	900	1100	●	●	●	●	●	●	●	●	**NH352**
669	1030	1300	1500	●	●	●	●	●	●	●	●	**NH1056**
1140	1680	1000	1200	●	●	●	●	●	●	●	●	**NH256**
2280	3600	900	1250	●	●	●	●	●	●	●	●	**NH2256 E**
2160	3000	800	1000	●	●	●	●	●	●	●	●	**NH356 E**
2750	4200	750	1100	●	●	●	●	●	●	●	●	**NH2356**
890	1380	1200	1400	●	●	●	●	●	●	●	●	**NH1060**
1350	1960	920	1100	●	●	●	●	●	●	●	●	**NH260**
2400	3800	880	1200	●	●	●	●	●	●	●	●	**NH2260**
913	1450	1100	1300	●	●	●	●	●	●	●	●	**NH1064**
1540	2270	840	1000	●	●	●	●	●	●	●	●	**NH264**
3000	4100	850	1150	●	●	●	●	●	●	●	●	**NH2264**
1090	1750	980	1200	●	●	●	●	●	●	●	●	**NH1068**
1120	1830	920	1100	●	●	●	●	●	●	●	●	**NH1072**
1150	1920	860	1000	●	●	●	●	●	●	●	●	**NH1076**
1400	2310	780	920	●	●	●	●	●	●	●	●	**NH1080**
1390	2320	730	860	●	●	●	●	●	●	●	●	**NH1084**
1490	2520	680	800	●	●	●	●	●	●	●	●	**NH1088**
1590	2730	630	750	●	●	●	●	●	●	●	●	**NH1092**
1700	3100	600	700	●	●	●	●	●	●	●	●	**NH1096**
2270	4440	570	650	●	●	●	●	●	●	●	●	**NH10/500**

* Other products also available



https://nppnovoteh.com

5. CYLINDRICAL ROLLER BEARINGS

5.4. Angular rings for cylindrical roller bearings - HJ



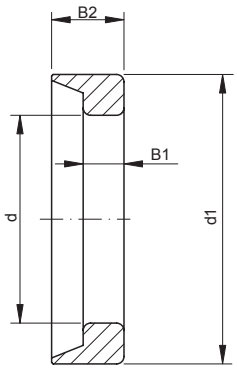

HJ..

15 – 60 mm

Shaft [mm]	Bearing No.	Series		Dimensions [mm]				Weight [kg]
		SD	SB	d	d1	B1	B2	
15	**HJ202 E**	2	0	15	21,9	2,5	5	0,005
	HJ302 E	3	0	15	24,3	3	5,5	0,008
17	**HJ203 E**	2	0	17	25	3	5,5	0,009
	HJ2203 E	2	2	17	25	3	5,5	0,012
	HJ303 E	3	0	17	27,7	3	5,5	0,011
20	**HJ204 E**	2	0	20	29,7	3	6,75	0,012
	HJ2204 E	2	2	20	29,8	3	6,5	0,012
	HJ304 E	3	0	20	31,4	4	6,5	0,017
	HJ2304 E	3	2	20	31,4	4	7,5	0,018
25	**HJ205 E**	2	0	25	34,8	3	6	0,014
	HJ2205 E	2	2	25	34,8	3	6,5	0,014
	HJ305 E	3	0	25	38,2	4	7	0,025
	HJ2305 E	3	2	25	38,2	4	8	0,026
30	**HJ206 E**	2	0	30	41,4	4	7	0,025
	HJ2206 E	2	2	30	41,4	4	7,5	0,025
	HJ306 E	3	0	30	45,1	5	8,5	0,042
	HJ2306 E	3	2	30	45,1	5	9,5	0,043
	HJ406	4	0	30	50,5	7	11,5	0,08
35	**HJ207 E**	2	0	35	48,2	4	7	0,033
	HJ2207 E	2	2	35	48,2	4	8,5	0,035
	HJ307 E	3	0	35	51,5	6	9,5	0,06
	HJ2307 E	3	2	35	51,1	6	11	0,062
	HJ407	4	0	35	59	8	13	0,12
40	**HJ208 E**	2	0	40	54,1	5	8,5	0,049
	HJ2208 E	2	2	40	54,1	5	9	0,05
	HJ308 E	3	0	40	57,7	7	11	0,088
	HJ2308 E	3	2	40	57,7	7	12,5	0,091
	HJ408	4	0	40	64,8	8	13	0,14
45	**HJ209 E**	2	0	45	59,1	5	8,5	0,055
	HJ2209 E	2	2	45	59,1	5	9	0,055
	HJ309 E	3	0	45	64,5	7	11,5	0,11
	HJ2309 E	3	2	45	64,5	7	13	0,113
	HJ409	4	0	45	71,8	8	13,5	0,175
50	**HJ210 E**	2	0	50	64,1	5	9	0,061
	HJ2210 E	2	2	50	64,1	5	9	0,061
	HJ310 E	3	0	50	71,4	8	13	0,151
	HJ2310 E	3	2	50	71,4	8	14,5	0,155
	HJ410	4	0	50	78,8	9	14,5	0,23
55	**HJ211 E**	2	0	55	70,9	6	9,5	0,087
	HJ2211 E	2	2	55	70,9	6	10	0,088
	HJ311 E	3	0	55	77,6	9	14	0,195
	HJ2311 E	3	2	55	77,6	9	15,5	0,2
	HJ411	4	0	55	85,2	10	16,5	0,29
60	**HJ212 E**	2	0	60	77,7	6	10	0,108
	HJ2212 E	2	2	60	77,7	6	10	0,108
	HJ312 E	3	0	60	84,5	9	14,5	0,231

- warehouse - order - phone

Basic makes*	Application		Bearing No.
-	NH	NUJ	
◴	NH202 E	NUJ202 E	**HJ202 E**
◴	NH302 E	NUJ302 E	**HJ302 E**
◴	NH203 E	NUJ203 E	**HJ203 E**
◴	NH2203 E	NUJ2203 E	**HJ2203 E**
◴	NH303 E	NUJ303 E	**HJ303 E**
◴	NH204 E	NUJ204 E	**HJ204 E**
◴	NH2204 E	NUJ2204 E	**HJ2204 E**
◴	NH304 E	NUJ304 E	**HJ304 E**
◴	NH2304 E	NUJ2304 E	**HJ2304 E**
◴	NH205 E	NUJ205 E	**HJ205 E**
◴	NH2205 E	NUJ2205 E	**HJ2205 E**
◴	NH305 E	NUJ305 E	**HJ305 E**
◴	NH2305 E	NUJ2305 E	**HJ2305 E**
◴	NH206 E	NUJ206 E	**HJ206 E**
◴	NH2206 E	NUJ2206 E	**HJ2206 E**
◴	NH306 E	NUJ306 E	**HJ306 E**
◴	NH2306 E	NUJ2306 E	**HJ2306 E**
◴	NH406	NUJ406	**HJ406**
◴	NH207 E	NUJ207 E	**HJ207 E**
◴	NH2207 E	NUJ2207 E	**HJ2207 E**
◴	NH307 E	NUJ307 E	**HJ307 E**
◴	NH2307 E	NUJ2307 E	**HJ2307 E**
◴	NH407	NUJ407	**HJ407**
◴	NH208 E	NUJ208 E	**HJ208 E**
◴	NH2208 E	NUJ2208 E	**HJ2208 E**
◴	NH308 E	NUJ308 E	**HJ308 E**
◴	NH2308 E	NUJ2308 E	**HJ2308 E**
◴	NH408	NUJ408	**HJ408**
◴	NH209 E	NUJ209 E	**HJ209 E**
◴	NH2209 E	NUJ2209 E	**HJ2209 E**
◴	NH309 E	NUJ309 E	**HJ309 E**
◴	NH2309 E	NUJ2309 E	**HJ2309 E**
◴	NH409	NUJ409	**HJ409**
◴	NH210 E	NUJ210 E	**HJ210 E**
◴	NH2210 E	NUJ2210 E	**HJ2210 E**
◴	NH310 E	NUJ310 E	**HJ310 E**
◴	NH2310 E	NUJ2310 E	**HJ2310 E**
◴	NH410	NUJ410	**HJ410**
◴	NH211 E	NUJ211 E	**HJ211 E**
◴	NH2211 E	NUJ2211 E	**HJ2211 E**
◴	NH311 E	NUJ311 E	**HJ311 E**
◴	NH2311 E	NUJ2311 E	**HJ2311 E**
◴	NH411	NUJ411	**HJ411**
◴	NH212 E	NUJ212 E	**HJ212 E**
◴	NH2212 E	NUJ2212 E	**HJ2212 E**
◴	NH312 E	NUJ312 E	**HJ312 E**

* Other products also available



https://nppnovoteh.com

5. CYLINDRICAL ROLLER BEARINGS

5.4. Angular rings for cylindrical roller bearings - HJ



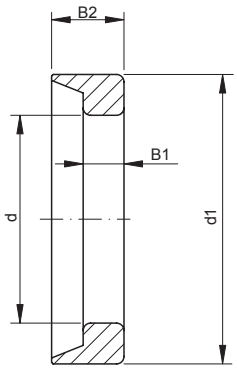

HJ..

60 – 110 mm

Shaft [mm]	Bearing No.	Series		Dimensions [mm]				Weight [kg]
		SD	SB	d	d1	B1	B2	
60 cont.	**HJ2312 E**	3	2	60	84,5	9	16	0,237
	HJ412	4	0	60	91,8	10	16,5	0,34
65	**HJ213 E**	2	0	65	84,5	6	10	0,129
	HJ2213 E	2	2	65	84,5	6	10,5	0,131
	HJ313 E	3	0	65	90,6	10	15,5	0,288
	HJ2313 E	3	2	65	90,6	10	18	0,298
	HJ413	4	0	65	98,5	11	18	0,42
70	**HJ214 E**	2	0	70	89,5	7	11	0,157
	HJ2214 E	2	2	70	89,5	7	11,5	0,158
	HJ314 E	3	0	70	97,5	10	15,5	0,33
	HJ2314 E	3	2	70	97,5	10	18,5	0,345
	HJ414	4	0	70	110,5	12	20	0,605
75	**HJ215 E**	2	0	75	94,5	7	11	0,166
	HJ2215 E	2	2	75	94,5	7	11,5	0,167
	HJ315 E	3	0	75	104,2	11	16,5	0,41
	HJ2315 E	3	2	75	104,2	11	19,5	0,43
	HJ415	4	0	75	116	13	21,5	0,71
80	**HJ216 E**	2	0	80	101,6	8	12,5	0,222
	HJ2216 E	2	2	80	101,6	8	12,5	0,222
	HJ316 E	3	0	80	110,6	11	17	0,46
	HJ2316 E	3	2	80	110,6	11	20	0,48
	HJ416	4	0	80	122	13	22	0,78
85	**HJ217 E**	2	0	85	107,6	8	12,5	0,25
	HJ2217 E	2	2	85	107,6	8	13	0,252
	HJ317 E	3	0	85	117,9	12	18,5	0,575
	HJ2317 E	3	2	85	117,9	12	22	0,595
	HJ417	4	0	85	126	14	24	0,88
90	**HJ218 E**	2	0	90	114,4	9	14	0,32
	HJ2218 E	2	2	90	114,4	9	15	0,325
	HJ318 E	3	0	90	124,2	12	18,5	0,63
	HJ2318 E	3	2	90	124,2	12	22	0,66
	HJ418	4	0	90	137	14	24	1,05
95	**HJ219 E**	2	0	95	120,6	9	14	0,355
	HJ2219 E	2	2	95	120,6	9	15,5	0,365
	HJ319 E	3	0	95	132,2	13	20,5	0,785
	HJ2319 E	3	2	95	132	13	26,5	0,76
	HJ419	4	0	95	147	15	25,5	1,3
100	**HJ220 E**	2	0	100	127,5	10	15	0,435
	HJ2220 E	2	2	100	127,5	10	16	0,45
	HJ320 E	3	0	100	139,6	13	20,5	0,89
	HJ2320 E	3	2	100	139,6	13	23,5	0,92
	HJ420	4	0	100	153,5	16	27	1,5
105	**HJ221 E**	2	0	105	134,8	10	16	0,51
	HJ321 E	3	0	105	145	13	20,5	0,97
	HJ421	4	0	105	159,5	16	27	1,65
110	**HJ222 E**	2	0	110	141,7	11	17	0,62

- warehouse - order - phone

Basic makes*	Application		Bearing No.
-	NH	NUJ	
◴	NH2312 E	NUJ2312 E	**HJ2312 E**
◴	NH412	NUJ412	**HJ412**
◴	NH213 E	NUJ213 E	**HJ213 E**
◴	NH2213 E	NUJ2213 E	**HJ2213 E**
◴	NH313 E	NUJ313 E	**HJ313 E**
◴	NH2313 E	NUJ2313 E	**HJ2313 E**
◴	NH413	NUJ413	**HJ413**
◴	NH214 E	NUJ214 E	**HJ214 E**
◴	NH2214 E	NUJ2214 E	**HJ2214 E**
◴	NH314 E	NUJ314 E	**HJ314 E**
◴	NH2314 E	NUJ2314 E	**HJ2314 E**
◴	NH414	NUJ414	**HJ414**
◴	NH215 E	NUJ215 E	**HJ215 E**
◴	NH2215 E	NUJ2215 E	**HJ2215 E**
◴	NH315 E	NUJ315 E	**HJ315 E**
◴	NH2315 E	NUJ2315 E	**HJ2315 E**
◴	NH415	NUJ415	**HJ415**
◴	NH216 E	NUJ216 E	**HJ216 E**
◴	NH2216 E	NUJ2216 E	**HJ2216 E**
◴	NH316 E	NUJ316 E	**HJ316 E**
◴	NH2316 E	NUJ2316 E	**HJ2316 E**
◴	NH416	NUJ416	**HJ416**
◴	NH217 E	NUJ217 E	**HJ217 E**
◴	NH2217 E	NUJ2217 E	**HJ2217 E**
◴	NH317 E	NUJ317 E	**HJ317 E**
◴	NH2317 E	NUJ2317 E	**HJ2317 E**
◴	NH417	NUJ417	**HJ417**
◴	NH218 E	NUJ218 E	**HJ218 E**
◴	NH2218 E	NUJ2218 E	**HJ2218 E**
◴	NH318 E	NUJ318 E	**HJ318 E**
◴	NH2318 E	NUJ2318 E	**HJ2318 E**
◴	NH418	NUJ418	**HJ418**
◴	NH219 E	NUJ219 E	**HJ219 E**
◴	NH2219 E	NUJ2219 E	**HJ2219 E**
◴	NH319 E	NUJ319 E	**HJ319 E**
◴	NH2319 E	NUJ2319 E	**HJ2319 E**
◴	NH419	NUJ419	**HJ419**
◴	NH220 E	NUJ220 E	**HJ220 E**
◴	NH2220 E	NUJ2220 E	**HJ2220 E**
◴	NH320 E	NUJ320 E	**HJ320 E**
◴	NH2320 E	NUJ2320 E	**HJ2320 E**
◴	NH420	NUJ420	**HJ420**
◴	NH221 E	NUJ221 E	**HJ221 E**
◴	NH321 E	NUJ321 E	**HJ321 E**
◴	NH421	NUJ421	**HJ421**
◴	NH222 E	NUJ222 E	**HJ222 E**

* Other products also available



https://nppnovoteh.com

5. CYLINDRICAL ROLLER BEARINGS

5.4. Angular rings for cylindrical roller bearings - HJ



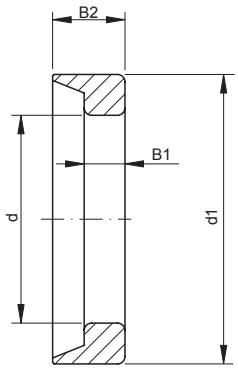

HJ..

110 – 200 mm

Shaft [mm]	Bearing No.	Series		Dimensions [mm]				Weight [kg]
		SD	SB	d	d1	B1	B2	
110 cont.	**HJ2222 E**	2	2	110	141,7	11	19,5	0,645
	HJ322 E	3	0	110	155,8	14	22	1,21
	HJ2322 E	3	2	110	155,8	14	26,5	1,27
	HJ422	4	0	110	171	17	29,5	2,1
120	**HJ224 E**	2	0	120	153,4	11	17	0,71
	HJ2224 E	2	2	120	153,4	11	20	0,745
	HJ324 E	3	0	120	168,6	14	22,5	1,41
	HJ2324 E	3	2	120	168,6	14	26	1,46
	HJ424	4	0	120	188	17	30,5	2,6
130	**HJ226 E**	2	0	130	164,2	11	17	0,79
	HJ2226 E	2	2	130	164,2	11	21	0,84
	HJ326 E	3	0	130	182,3	14	23	1,65
	HJ2326 E	3	2	130	182,3	14	28	1,73
	HJ426	4	0	130	205	18	32	3,3
140	**HJ228 E**	2	0	140	180	11	18	0,99
	HJ2228 E	2	2	140	180	11	23	1,07
	HJ328 E	3	0	140	196	15	25	2,04
	HJ2328 E	3	2	140	196	15	31	2,14
	HJ428	4	0	140	219	18	33	3,75
150	**HJ230 E**	2	0	150	193,7	12	19,5	1,26
	HJ2230 E	2	2	150	193,7	12	24,5	1,35
	HJ330 E	3	0	150	209	15	25	2,35
	HJ2330 E	3	2	150	210	15	31,5	2,48
	HJ430	4	0	150	234	20	36,5	4,7
160	**HJ232 E**	2	0	160	207,3	12	20	1,48
	HJ2232 E	2	2	160	206,1	12	24,5	1,55
	HJ332 E	3	0	160	221	15	25	2,59
	HJ2332 E	3	2	160	222,1	15	32	2,76
170	**HJ1034**	0	0	170	201	11	21	0,94
	HJ234 E	2	0	170	220,8	12	20	1,7
	HJ2234 E	2	2	170	219,5	12	24	1,79
	HJ2334	3	2	170	238	16	38,5	3,85
	HJ334 E	3	0	170	238	16	29,5	3,25
180	**HJ1036**	0	0	180	215	12	22,5	1,2
	HJ236 E	2	0	180	230,8	12	20	1,79
	HJ2236 E	2	2	180	229,5	12	24	1,88
	HJ336 E	3	0	180	250,5	17	28,5	3,85
	HJ2336	3	2	180	252	17	40	4,6
190	**HJ1038**	0	0	190	225	12	22,5	1,25
	HJ238 E	2	0	190	244,5	13	21,5	2,19
	HJ2238 E	2	2	190	243,2	13	26,5	2,31
	HJ338 E	3	0	190	264	18	29	4,45
	HJ2338 E	3	2	190	262,5	18	36,5	4,87
200	**HJ1040**	0	0	200	239	13	25,5	1,65
	HJ240 E	2	0	200	258,2	14	23	2,65
	HJ2240 E	2	2	200	256,9	14	28	2,78
	HJ340 E	3	0	200	279	18	30	5

- warehouse - order - phone

Basic makes*	Application		Bearing No.
-	NH	NUJ	
◴	NH2222 E	NUJ2222 E	**HJ2222 E**
◴	NH322 E	NUJ322 E	**HJ322 E**
◴	NH2322 E	NUJ2322 E	**HJ2322 E**
◴	NH422	NUJ422	**HJ422**
◴	NH224 E	NUJ224 E	**HJ224 E**
◴	NH2224 E	NUJ2224 E	**HJ2224 E**
◴	NH324 E	NUJ324 E	**HJ324 E**
◴	NH2324 E	NUJ2324 E	**HJ2324 E**
◴	NH424	NUJ424	**HJ424**
◴	NH226 E	NUJ226 E	**HJ226 E**
◴	NH2226 E	NUJ2226 E	**HJ2226 E**
◴	NH326 E	NUJ326 E	**HJ326 E**
◴	NH2326 E	NUJ2326 E	**HJ2326 E**
◴	NH426	NUJ426	**HJ426**
◴	NH228 E	NUJ228 E	**HJ228 E**
◴	NH2228 E	NUJ2228 E	**HJ2228 E**
◴	NH328 E	NUJ328 E	**HJ328 E**
◴	NH2328 E	NUJ2328 E	**HJ2328 E**
◴	NH428	NUJ428	**HJ428**
◴	NH230 E	NUJ230 E	**HJ230 E**
◴	NH2230 E	NUJ2230 E	**HJ2230 E**
◴	NH330 E	NUJ330 E	**HJ330 E**
◴	NH2330 E	NUJ2330 E	**HJ2330 E**
◴	NH430	NUJ430	**HJ430**
◴	NH232 E	NUJ232 E	**HJ232 E**
◴	NH2232 E	NUJ2232 E	**HJ2232 E**
◴	NH332 E	NUJ332 E	**HJ332 E**
◴	NH2332 E	NUJ2332 E	**HJ2332 E**
◴	NH1034	NUJ1034	**HJ1034**
◴	NH234 E	NUJ234 E	**HJ234 E**
◴	NH2234 E	NUJ2234 E	**HJ2234 E**
◴	NH2334	NUJ2334	**HJ2334**
◴	NH334 E	NUJ334 E	**HJ334 E**
◴	NH1036	NUJ1036	**HJ1036**
◴	NH236 E	NUJ236 E	**HJ236 E**
◴	NH2236 E	NUJ2236 E	**HJ2236 E**
◴	NH336 E	NUJ336 E	**HJ336 E**
◴	NH2336	NUJ2336	**HJ2336**
◴	NH1038	NUJ1038	**HJ1038**
◴	NH238 E	NUJ238 E	**HJ238 E**
◴	NH2238 E	NUJ2238 E	**HJ2238 E**
◴	NH338 E	NUJ338 E	**HJ338 E**
◴	NH2338 E	NUJ2338 E	**HJ2338 E**
◴	NH1040	NUJ1040	**HJ1040**
◴	NH240 E	NUJ240 E	**HJ240 E**
◴	NH2240 E	NUJ2240 E	**HJ2240 E**
◴	NH340 E	NUJ340 E	**HJ340 E**

* Other products also available



https://nppnovoteh.com

5. CYLINDRICAL ROLLER BEARINGS

5.4. Angular rings for cylindrical roller bearings - HJ



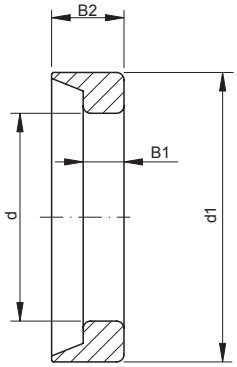

HJ..

200 – 500 mm

Shaft [mm]	Bearing No.	Series		Dimensions [mm]				Weight [kg]
		SD	SB	d	d1	B1	B2	
200 cont.	**HJ2340 E**	3	2	200	276,1	18	37	5,28
220	**HJ1044**	0	0	220	262	14	27	2,1
	HJ244 E	2	0	220	285,8	15	25	3,55
	HJ2244	2	2	220	279	15	29	3,55
	HJ344	3	0	220	307	20	36	7,05
	HJ2344 E	3	2	220	301	20	40	6,8
240	**HJ1048**	0	0	240	282	14	27	2,25
	HJ248 E	2	0	240	312,6	16	27	4,65
	HJ2248	2	2	240	313	16	38,5	4,65
	HJ348 E	3	0	240	331,3	22	35,5	8,2
	HJ2348	3	2	240	335	22	52	10,5
260	**HJ1052**	0	0	260	309	16	31,5	3,3
	HJ252 E	2	0	260	337,5	18	30	6,2
	HJ2252	2	2	260	313	16	38,5	4,65
	HJ352	3	0	260	340	18	40,5	9,8
280	**HJ1056**	0	0	280	329	16	31,5	3,55
	HJ256	2	0	280	360	18	33	7,15
	HJ2256 E	2	2	280	350	18	38	4,65
	HJ356 E	3	0	280	389,8	26	42,5	13,8
	HJ2356	3	2	280	390	26	58,5	14
300	**HJ1060**	0	0	300	356	19	36	5,15
	HJ260	2	0	300	387	20	34,5	7,4
	HJ2260	2	2	300	313	16	38,5	4,65
320	**HJ1064**	0	0	320	376	19	36	5,45
	HJ264	2	0	320	415	21	37	11,3
	HJ2264	2	2	320	313	16	38,5	4,65
340	**HJ1068**	0	0	340	403	21	39,5	7,2
360	**HJ1072**	0	0	360	423	21	39,5	7,55
380	**HJ1076**	0	0	380	443	21	39,5	7,95
400	**HJ1080**	0	0	400	470	23	43	10,5
420	**HJ1084**	0	0	420	490	23	43	11
440	**HJ1088**	0	0	440	513	24	45	12
460	**HJ1092**	0	0	460	537	25	48	14
480	**HJ1096**	0	0	480	557	25	48	14,5
500	**HJ10/500**	0	0	500	577	25	48	15

- warehouse - order - phone

https://nppnovoteh.com

Basic makes*	Application		Bearing No.
-	NH	NUJ	
	NH2340 E	NUJ2340 E	**HJ2340 E**
	NH1044	NUJ1044	**HJ1044**
	NH244 E	NUJ244 E	**HJ244 E**
	NH2244	NUJ2244	**HJ2244**
	NH344	NUJ344	**HJ344**
	NH2344 E	NUJ2344 E	**HJ2344 E**
	NH1048	NUJ1048	**HJ1048**
	NH248 E	NUJ248 E	**HJ248 E**
	NH2248	NUJ2248	**HJ2248**
	NH348 E	NUJ348 E	**HJ348 E**
	NH2348	NUJ2348	**HJ2348**
	NH1052	NUJ1052	**HJ1052**
	NH252 E	NUJ252 E	**HJ252 E**
	NH2252	NUJ2252	**HJ2252**
	NH352	NUJ352	**HJ352**
	NH1056	NUJ1056	**HJ1056**
	NH256	NUJ256	**HJ256**
	NH2256 E	NUJ2256 E	**HJ2256 E**
	NH356 E	NUJ356 E	**HJ356 E**
	NH2356	NUJ2356	**HJ2356**
	NH1060	NUJ1060	**HJ1060**
	NH260	NUJ260	**HJ260**
	NH2260	NUJ2260	**HJ2260**
	NH1064	NUJ1064	**HJ1064**
	NH264	NUJ264	**HJ264**
	NH2264	NUJ2264	**HJ2264**
	NH1068	NUJ1068	**HJ1068**
	NH1072	NUJ1072	**HJ1072**
	NH1076	NUJ1076	**HJ1076**
	NH1080	NUJ1080	**HJ1080**
	NH1084	NUJ1084	**HJ1084**
	NH1088	NUJ1088	**HJ1088**
	NH1092	NUJ1092	**HJ1092**
	NH1096	NUJ1096	**HJ1096**
	NH10/500	NUJ10/500	**HJ10/500**

* Other products also available



https://nppnovoteh.com

5. CYLINDRICAL ROLLER BEARINGS

5.5. Single-row cylindrical roller bearings - type - NUP



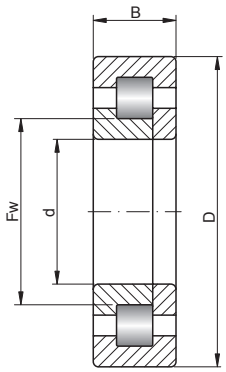

NUP..

15 – 45 mm

Shaft [mm]	Bearing No.	Series		Dimensions [mm]				Weight [kg]	Basic load ratings [kN]	
		SD	SB	d	D	B	Fw		dyn. C	stat. C_0
15	**NUP202 E**	2	0	15	35	11	19,3	0,05	12,7	10,4
	NUP302 E	3	0	15	42	13	21	0,092	19,4	15,3
17	**NUP203 E**	2	0	17	40	12	22,1	0,073	17,6	14,6
	NUP2203 E	2	2	17	40	16	22,1	0,096	24	22
	NUP303 E	3	0	17	47	14	24,2	0,126	25,5	21,2
20	**NUP204 E**	2	0	20	47	14	26,5	0,118	25,7	22,6
	NUP2204 E	2	2	20	47	18	26,5	0,154	30,6	28,3
	NUP304 E	3	0	20	52	15	27,5	0,161	31,5	26,9
	NUP2304 E	3	2	20	52	21	27,5	0,227	42	38,8
25	**NUP1005**	0	0	25	47	12	30,5	0,088	14,3	13,1
	NUP205 E	2	0	25	52	15	31,5	0,146	29,3	27,7
	NUP2205 E	2	2	25	52	18	31,5	0,174	34,9	34,6
	NUP305 E	3	0	25	62	17	34	0,255	41,6	37,4
	NUP2305 E	3	2	25	62	24	34	0,368	57	56,1
30	**NUP1006**	0	0	30	55	13	36,5	0,127	18,7	18,4
	NUP206 E	2	0	30	62	16	37,5	0,22	39,1	37,4
	NUP2206 E	2	2	30	62	20	37,5	0,276	48,9	49,8
	NUP3206	2	3	30	62	23,8	38,5	0,361	42,7	46,4
	NUP306 E	3	0	30	72	19	40,5	0,38	53,1	50,2
	NUP2306 E	3	2	30	72	27	40,5	0,562	74,6	77,6
	NUP3306	3	3	30	72	30,2	42	0,684	69,1	74,3
	NUP406	4	0	30	90	23	45	0,793	62,8	55
35	**NUP1007**	0	0	35	62	14	42	0,192	22,6	23,2
	NUP207 E	2	0	35	72	17	44	0,322	50,2	50,2
	NUP2207 E	2	2	35	72	23	44	0,426	61,6	65,3
	NUP3207	2	3	35	72	27	43,8	0,552	54,8	59,1
	NUP307 E	3	0	35	80	21	46,2	0,508	66,6	65,4
	NUP2307 E	3	2	35	80	31	46,2	0,767	93,1	101
	NUP3307	3	3	35	80	34,9	46,2	0,956	81,7	89,1
	NUP407	4	0	35	100	25	53	1,074	75,2	68,9
40	**NUP1008**	0	0	40	68	15	47	0,235	24,9	25,7
	NUP208 E	2	0	40	80	18	49,5	0,404	55,7	55,4
	NUP2208 E	2	2	40	80	23	49,5	0,516	72,3	77,6
	NUP5208	2	5	40	80	30,16	49,3	0,777	57	98,1
	NUP3208	2	3	40	80	30,2	50	0,749	78,3	90,6
	NUP308 E	3	0	40	90	23	52	0,699	83,1	91,5
	NUP2308 E	3	2	40	90	33	52	1,013	114	122
	NUP3308	3	3	40	90	36,5	53,5	1,253	104	119
	NUP408	4	0	40	110	27	58	1,369	97,1	89,1
45	**NUP1009**	0	0	45	75	16	52,5	0,305	31	33,8
	NUP2009	0	2	45	75	19	52,5	0,358	52,8	64
	NUP209 E	2	0	45	85	19	54,5	0,463	63,1	66,4
	NUP2209 E	2	2	45	85	23	54,5	0,564	76,1	84,6
	NUP5209	2	5	45	85	30,16	55,5	0,839	89,1	117,7
	NUP3209	2	3	45	85	30,2	55	0,811	82,4	99
	NUP309 E	3	0	45	100	25	58,5	0,957	97,4	98,3
	NUP2309 E	3	2	45	100	36	58,5	1,39	137	153
	NUP3309	3	3	45	100	39,7	58,5	1,674	131	149
	NUP409	4	0	45	120	29	64,5	1,727	115	112

- warehouse - order - phone

Limiting speed [rpm]		Basic makes*							Bearing No.
grease	oil	-	M	TV	C2	C3	C4	K	
19000	22000	●	◔	◔	◔	○	○	◔	**NUP202 E**
16000	19000	●	◔	◔	◔	○	○	◔	**NUP302 E**
17000	20000	●	◔	◔	◔	○	○	◔	**NUP203 E**
16000	18500	●	◔	◔	◔	○	○	◔	**NUP2203 E**
14000	17000	●	◔	◔	◔	○	○	◔	**NUP303 E**
15000	18000	●	◔	◔	◔	○	○	◔	**NUP204 E**
13000	18000	●	◔	◔	◔	○	○	◔	**NUP2204 E**
12000	16000	●	◔	◔	◔	○	○	◔	**NUP304 E**
11000	16000	●	◔	◔	◔	○	○	◔	**NUP2304 E**
15000	18000	○	◔	◔	◔	○	◔	◔	**NUP1005**
13000	15000	●	◔	◔	◔	○	○	◔	**NUP205 E**
12000	15000	●	◔	◔	◔	○	○	◔	**NUP2205 E**
10000	14000	●	◔	◔	◔	○	○	◔	**NUP305 E**
9100	14000	●	◔	◔	◔	○	○	◔	**NUP2305 E**
13000	15000	○	◔	◔	◔	○	◔	◔	**NUP1006**
11000	13000	●	◔	◔	◔	○	○	◔	**NUP206 E**
9700	13000	●	◔	◔	◔	○	○	◔	**NUP2206 E**
8700	13000	◔	◔	◔	◔	◔	◔	◔	**NUP3206**
8700	12000	●	◔	◔	◔	○	○	◔	**NUP306 E**
7800	12000	●	◔	◔	◔	○	○	◔	**NUP2306 E**
7700	12000	◔	◔	◔	◔	◔	◔	◔	**NUP3306**
7600	10000	●	○	◔	◔	○	○	◔	**NUP406**
11000	13000	○	◔	◔	◔	○	◔	◔	**NUP1007**
9300	11000	●	◔	◔	◔	○	○	◔	**NUP207 E**
8300	11000	●	◔	◔	◔	○	○	◔	**NUP2207 E**
7600	11000	◔	◔	◔	◔	◔	◔	◔	**NUP3207**
7700	10000	●	◔	◔	◔	○	○	◔	**NUP307 E**
6900	10000	●	◔	◔	◔	○	○	◔	**NUP2307 E**
7000	10000	◔	◔	◔	◔	◔	◔	◔	**NUP3307**
6600	8800	●	○	◔	◔	○	○	◔	**NUP407**
10000	12000	○	◔	◔	◔	○	◔	◔	**NUP1008**
8300	9900	●	◔	◔	◔	○	○	◔	**NUP208 E**
7400	9900	●	◔	◔	◔	○	○	◔	**NUP2208 E**
7500	8900	◔	◔	◔	◔	◔	◔	◔	**NUP5208**
6700	10000	◔	◔	◔	◔	◔	◔	◔	**NUP3208**
6800	9100	●	◔	◔	◔	○	○	◔	**NUP308 E**
6100	9100	●	◔	◔	◔	○	○	◔	**NUP2308 E**
6100	9100	◔	◔	◔	◔	◔	◔	◔	**NUP3308**
6000	8000	●	○	◔	◔	○	○	◔	**NUP408**
9200	11000	○	◔	◔	◔	○	◔	◔	**NUP1009**
9000	11000	◔	◔	◔	◔	◔	◔	◔	**NUP2009**
7600	9200	●	◔	◔	◔	○	○	◔	**NUP209 E**
6900	9200	●	◔	◔	◔	○	○	◔	**NUP2209 E**
6700	7900	◔	◔	◔	◔	◔	◔	◔	**NUP5209**
6100	9200	◔	◔	◔	◔	◔	◔	◔	**NUP3209**
6100	8200	●	◔	◔	◔	○	○	◔	**NUP309 E**
5400	8200	●	◔	◔	◔	○	○	◔	**NUP2309 E**
5500	8300	◔	◔	◔	◔	◔	◔	◔	**NUP3309**
5400	7200	●	○	◔	◔	○	○	◔	**NUP409**

* Other products also available

https://nppnovoteh.com

5. CYLINDRICAL ROLLER BEARINGS

5.5. Single-row cylindrical roller bearings - type - NUP



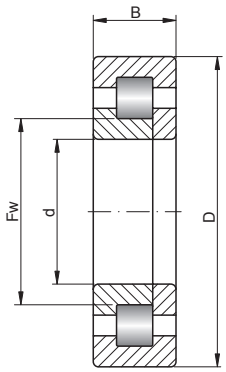

NUP..

50 – 75 mm

Shaft [mm]	Bearing No.	Series		Dimensions [mm]				Weight [kg]	Basic load ratings [kN]	
		SD	SB	d	D	B	Fw		dyn. C	stat. C_0
50	**NUP1010**	0	0	50	80	16	57,5	0,322	33,6	36,8
	NUP210 E	2	0	50	90	20	59,5	0,523	66,1	71,9
	NUP2210 E	2	2	50	90	23	59,5	0,61	79,7	91,5
	NUP5210	2	5	50	90	30,16	60,4	0,923	92,6	128
	NUP3210	2	3	50	90	30,2	60,4	0,873	86,2	108
	NUP310 E	3	0	50	110	27	65	1,211	110	113
	NUP2310 E	3	2	50	110	40	65	1,853	163	187
	NUP3310	3	3	50	110	44,4	65	2,253	156	183
	NUP410	4	0	50	130	31	70,8	2,117	139	136
55	**NUP1011**	0	0	55	90	18	64,5	0,469	37,4	43,8
	NUP211 E	2	0	55	100	21	66	0,684	86,4	98,7
	NUP2211 E	2	2	55	100	25	66	0,849	101	122
	NUP3211	2	3	55	100	33,3	66,5	1,2	95,5	118
	NUP5211	2	5	55	100	33,34	66,9	1,264	119	171
	NUP311 E	3	0	55	120	29	70,5	1,579	137	143
	NUP2311 E	3	2	55	120	43	70,5	2,369	201	233
	NUP3311	3	3	55	120	49,2	70,5	2,959	188	220
	NUP411	4	0	55	140	33	77,2	2,643	142	138
60	**NUP1012**	0	0	60	95	18	69,5	0,503	42,1	50
	NUP212 E	2	0	60	110	22	72	0,874	97,7	107
	NUP2212 E	2	2	60	110	28	72	1,148	131	157
	NUP3212	2	3	60	110	36,5	73,5	1,601	128	167
	NUP5212	2	5	60	110	36,5	72,3	1,674	150	211
	NUP312 E	3	0	60	130	31	77	1,969	150	157
	NUP2312 E	3	2	60	130	46	77	2,959	223	262
	NUP3312	3	3	60	130	54	77	3,801	220	265
	NUP412	4	0	60	150	35	83	3,18	178	184
65	**NUP1013**	0	0	65	100	18	74,5	0,532	43,3	52,9
	NUP3013	0	3	65	100	26	74,5	0,74	105	146
	NUP213 E	2	0	65	120	23	78,5	1,106	108	119
	NUP2213 E	2	2	65	120	31	78,5	1,527	149	181
	NUP3213	2	3	65	120	38,1	79,6	2,001	148	197
	NUP5213	2	5	65	120	38,1	80,4	1,979	139	196
	NUP313 E	3	0	65	140	33	82,5	2,43	181	191
	NUP2313 E	3	2	65	140	48	82,5	3,54	251	287
	NUP3313	3	3	65	140	58,7	83,5	4,77	241	294
	NUP413	4	0	65	160	37	89,3	3,77	198	203
70	**NUP1014**	0	0	70	110	20	80	0,74	57,9	70,4
	NUP214 E	2	0	70	125	24	83,5	1,22	119	137
	NUP2214 E	2	2	70	125	31	83,5	1,61	156	194
	NUP5214	2	5	70	125	39,69	84,8	2,34	178	261
	NUP3214	2	3	70	125	39,7	84,5	2,2	147	198
	NUP314 E	3	0	70	150	35	89	2,95	205	222
	NUP2314 E	3	2	70	150	51	89	4,3	275	323
	NUP3314	3	3	70	150	63,5	90	5,92	283	356
	NUP414	4	0	70	180	42	100	5,54	246	257
75	**NUP1015**	0	0	75	115	20	85	0,77	63,6	78,1
	NUP215 E	2	0	75	130	25	88,5	1,35	130	156
	NUP2215 E	2	2	75	130	31	88,5	1,69	162	207
	NUP5215	2	5	75	130	41,28	89	2,53	196	299
	NUP3215	2	3	75	130	41,3	88,5	2,4	167	226

- warehouse - order - phone

Limiting speed [rpm]		Basic makes*							Bearing No.
grease	oil	-	M	TV	C2	C3	C4	K	
8400	9900	◴	◝	◝	◝	◴	◝	◝	**NUP1010**
7100	8500	◓	◝	◝	◝	◴	◴	◝	**NUP210 E**
6400	8500	◓	◝	◝	◝	◴	◴	◝	**NUP2210 E**
6300	7500	◝	◝	◝	◝	◝	◝	◝	**NUP5210**
5700	8500	◝	◝	◝	◝	◝	◝	◝	**NUP3210**
5500	7400	◓	◝	◝	◝	◴	◴	◝	**NUP310 E**
4900	7400	◓	◝	◝	◝	◴	◴	◝	**NUP2310 E**
5000	7500	◝	◝	◝	◝	◝	◝	◝	**NUP3310**
4900	6600	◓	◴	◝	◝	◴	◴	◝	**NUP410**
7600	8900	◴	◝	◝	◝	◴	◴	◝	**NUP1011**
6400	7700	◓	◝	◝	◝	◴	◴	◝	**NUP211 E**
5800	7700	◓	◴	◝	◝	◴	◴	◝	**NUP2211 E**
5100	7700	◝	◝	◝	◝	◝	◝	◝	**NUP3211**
5600	6700	◝	◝	◝	◝	◝	◝	◝	**NUP5211**
5100	6700	◓	◴	◝	◝	◴	◴	◝	**NUP311 E**
4500	6700	◓	◴	◝	◝	◴	◴	◝	**NUP2311 E**
4500	6800	◝	◝	◝	◝	◝	◝	◝	**NUP3311**
4600	6100	◓	◴	◝	◝	◴	◴	◝	**NUP411**
7000	8300	◴	◝	◝	◝	◴	◴	◝	**NUP1012**
5800	6900	◓	◝	◝	◝	◴	◴	◝	**NUP212 E**
5200	6900	◓	◴	◝	◝	◴	◴	◝	**NUP2212 E**
4700	7000	◝	◝	◝	◝	◝	◝	◝	**NUP3212**
5300	6300	◝	◝	◝	◝	◝	◝	◝	**NUP5212**
4600	6200	◓	◴	◝	◝	◴	◴	◝	**NUP312 E**
4100	6200	◓	◴	◝	◝	◴	◴	◝	**NUP2312 E**
4200	6300	◝	◝	◝	◝	◝	◝	◝	**NUP3312**
4200	5700	◓	◴	◝	◝	◴	◴	◝	**NUP412**
6600	7800	◴	◝	◝	◝	◴	◴	◝	**NUP1013**
6300	7500	◝	◝	◝	◝	◝	◝	◝	**NUP3013**
5300	6400	◓	◝	◝	◝	◴	◴	◝	**NUP213 E**
4800	6400	◓	◴	◝	◝	◴	◴	◝	**NUP2213 E**
4300	6400	◝	◝	◝	◝	◝	◝	◝	**NUP3213**
4700	5600	◝	◝	◝	◝	◝	◝	◝	**NUP5213**
4300	5700	◓	◴	◝	◝	◴	◴	◝	**NUP313 E**
3800	5700	◓	◴	◝	◝	◴	◴	◝	**NUP2313 E**
3900	5800	◝	◝	◝	◝	◝	◝	◝	**NUP3313**
4000	5300	◓	◴	◝	◝	◴	◴	◝	**NUP413**
6100	7200	◴	◝	◝	◝	◴	◴	◝	**NUP1014**
5000	6000	◓	◝	◝	◝	◴	◴	◝	**NUP214 E**
4500	6000	◓	◴	◝	◝	◴	◴	◝	**NUP2214 E**
4700	5600	◝	◝	◝	◝	◝	◝	◝	**NUP5214**
4100	6100	◝	◝	◝	◝	◝	◝	◝	**NUP3214**
4000	5300	◓	◴	◝	◝	◴	◴	◝	**NUP314 E**
3600	5300	◓	◴	◝	◝	◴	◴	◝	**NUP2314 E**
3600	5400	◝	◝	◝	◝	◝	◝	◝	**NUP3314**
3500	4700	◓	◴	◝	◝	◴	◴	◝	**NUP414**
5700	6800	◴	◝	◝	◝	◴	◴	◝	**NUP1015**
4800	5700	◓	◴	◝	◝	◴	◴	◝	**NUP215 E**
4300	5700	◓	◴	◝	◝	◴	◴	◝	**NUP2215 E**
4500	5300	◝	◝	◝	◝	◝	◝	◝	**NUP5215**
3900	5800	◝	◝	◝	◝	◝	◝	◝	**NUP3215**

* Other products also available

https://nppnovoteh.com

5. CYLINDRICAL ROLLER BEARINGS

5.5. Single-row cylindrical roller bearings - type - NUP



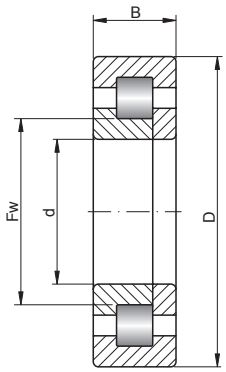

NUP..

75 – 100 mm

Shaft [mm]	Bearing No.	Series		Dimensions [mm]				Weight [kg]	Basic load ratings [kN]	
		SD	SB	d	D	B	Fw		dyn. C	stat. C_0
75 cont.	**NUP315 E**	3	0	75	160	37	95	3,55	240	263
	NUP2315 E	3	2	75	160	55	95	5,26	329	395
	NUP3315	3	3	75	160	68,3	95,5	7,22	338	430
	NUP415	4	0	75	190	45	104,5	6,58	265	274
80	**NUP1016**	0	0	80	125	22	91,5	1,05	69,3	86,4
	NUP216 E	2	0	80	140	26	95,3	1,64	139	167
	NUP2216 E	2	2	80	140	33	95,3	2,13	186	243
	NUP3216	2	3	80	140	44,4	95,3	3,03	190	259
	NUP5216	2	5	80	140	44,45	95,2	3,07	185	282
	NUP316 E	3	0	80	170	39	101	4,22	259	282
	NUP2316 E	3	2	80	170	58	101	6,27	361	431
	NUP3316	3	3	80	170	68,3	103	8,13	338	436
	NUP416	4	0	80	200	48	110	7,66	302	315
85	**NUP1017**	0	0	85	130	22	96,5	1,1	71,4	91,2
	NUP217 E	2	0	85	150	28	100,5	2,04	167	199
	NUP2217 E	2	2	85	150	36	100,5	2,67	218	279
	NUP3217	2	3	85	150	49,2	101,8	3,87	215	296
	NUP5217	2	5	85	150	49,21	102	3,89	211	316
	NUP317 E	3	0	85	180	41	108	5,06	291	330
	NUP2317 E	3	2	85	180	60	108	7,35	394	485
	NUP3317	3	3	85	180	73	108	9,72	399	517
	NUP417	4	0	85	210	52	113	9,14	340	350
90	**NUP1018**	0	0	90	140	24	103	1,42	84,7	109
	NUP218 E	2	0	90	160	30	107	2,5	182	217
	NUP2218 E	2	2	90	160	40	107	3,38	242	314
	NUP3218	2	3	90	160	52,4	107	4,73	270	373
	NUP5218	2	5	90	160	52,4	107,2	4,72	237	355
	NUP318 E	3	0	90	190	43	113,5	5,76	316	355
	NUP2318 E	3	2	90	190	64	113,5	8,55	437	534
	NUP3318	3	3	90	190	73	115	10,84	428	559
	NUP418	4	0	90	225	54	123,5	10,84	374	400
95	**NUP1019**	0	0	95	145	24	108	1,48	87,2	115
	NUP219 E	2	0	95	170	32	112,5	3,08	221	265
	NUP2219 E	2	2	95	170	43	112,5	4,13	287	371
	NUP5219	2	5	95	170	55,56	113,5	5,95	335	511
	NUP3219	2	3	95	170	55,6	113,5	5,7	297	412
	NUP319 E	3	0	95	200	45	121,5	6,76	334	387
	NUP2319 E	3	2	95	200	67	121,5	9,89	394	496
	NUP3319	3	3	95	200	77,8	121,5	12,74	487	654
	NUP419	4	0	95	240	55	133,5	14,32	410	444
100	**NUP1920**	9	0	100	140	20	110	0,96	67,7	94,4
	NUP1020	0	0	100	150	24	113	1,54	91	120
	NUP220 E	2	0	100	180	34	119	3,7	250	306
	NUP2220 E	2	2	100	180	46	119	5,08	334	444
	NUP3220	2	3	100	180	60,3	120	6,97	327	459
	NUP5220	2	5	100	180	60,32	121	6,83	304	473
	NUP320 E	3	0	100	215	47	127,5	8,16	379	424
	NUP2320 E	3	2	100	215	73	127,5	12,74	570	717
	NUP3320	3	3	100	215	82,6	129,5	15,79	530	706
	NUP420	4	0	100	250	58	139	14,74	458	498

- warehouse - order - phone

Limiting speed [rpm]		Basic makes*							Bearing No.
grease	oil	-	M	TV	C2	C3	C4	K	
3700	5000	●	◴	◝	◝	◴	◴	◝	**NUP315 E**
3300	5000	●	◴	◝	◝	◴	◴	◝	**NUP2315 E**
3400	5000	◝	◝	◝	◝	◝	◝	◝	**NUP3315**
3300	4400	●	◴	◝	◝	◴	◴	◝	**NUP415**
5300	6300	◴	◝	◝	◝	◴	◴	◝	**NUP1016**
4400	5300	●	◴	◝	◝	◴	◴	◝	**NUP216 E**
4000	5300	●	◴	◝	◝	◴	◴	◝	**NUP2216 E**
3600	5400	◝	◝	◝	◝	◝	◝	◝	**NUP3216**
4200	5000	◝	◝	◝	◝	◝	◝	◝	**NUP5216**
3500	4700	●	◴	◝	◝	◴	◴	◝	**NUP316 E**
3100	4700	●	◴	◝	◝	◴	◴	◝	**NUP2316 E**
3100	4700	◝	◝	◝	◝	◝	◝	◝	**NUP3316**
3100	4200	●	◴	◝	◝	◴	◴	◝	**NUP416**
5100	6000	◴	◝	◝	◝	◴	◴	◝	**NUP1017**
4200	5000	●	◴	◝	◝	◴	◴	◝	**NUP217 E**
3700	5000	●	◴	◝	◝	◴	◴	◝	**NUP2217 E**
3300	5000	◝	◝	◝	◝	◝	◝	◝	**NUP3217**
3800	4500	◝	◝	◝	◝	◝	◝	◝	**NUP5217**
3300	4400	●	◴	◝	◝	◴	◴	◝	**NUP317 E**
2900	4400	●	◴	◝	◝	◴	◴	◝	**NUP2317 E**
3000	4500	◝	◝	◝	◝	◝	◝	◝	**NUP3317**
3000	4000	●	◴	◝	◝	◴	◴	◝	**NUP417**
4700	5600	◴	◝	◝	◝	◴	◴	◝	**NUP1018**
3900	4700	●	◴	◝	◝	◴	◴	◝	**NUP218 E**
3500	4700	●	◴	◝	◝	◴	◴	◝	**NUP2218 E**
3100	4700	◝	◝	◝	◝	◝	◝	◝	**NUP3218**
3500	4200	◝	◝	◝	◝	◝	◝	◝	**NUP5218**
3100	4100	●	◴	◝	◝	◴	◴	◝	**NUP318 E**
2800	4100	●	◴	◝	◝	◴	◴	◝	**NUP2318 E**
2800	4200	◝	◝	◝	◝	◝	◝	◝	**NUP3318**
2800	3700	●	◴	◝	◝	◴	◴	◝	**NUP418**
4500	5300	◴	◝	◝	◝	◴	◴	◝	**NUP1019**
3700	4400	●	◴	◝	◝	◴	◴	◝	**NUP219 E**
3300	4400	●	◴	◝	◝	◴	◴	◝	**NUP2219 E**
3300	4000	◝	◝	◝	◝	◝	◝	◝	**NUP5219**
3000	4400	◝	◝	◝	◝	◝	◝	◝	**NUP3219**
2900	3900	●	◴	◝	◝	◴	◴	◝	**NUP319 E**
2600	4000	●	◴	◝	◝	◴	◴	◝	**NUP2319 E**
2600	4000	◝	◝	◝	◝	◝	◝	◝	**NUP3319**
2600	3400	●	◴	◝	◝	◴	◴	◝	**NUP419**
4500	5300	◝	◝	◝	◝	◝	◝	◝	**NUP1920**
4300	5100	◴	◴	◝	◝	◴	◴	◝	**NUP1020**
3500	4200	●	◴	◝	◝	◴	◴	◝	**NUP220 E**
3100	4200	●	◴	◝	◝	◴	◴	◝	**NUP2220 E**
2800	4200	◝	◝	◝	◝	◝	◝	◝	**NUP3220**
3200	3800	◝	◝	◝	◝	◝	◝	◝	**NUP5220**
2700	3600	●	◴	◝	◝	◴	◴	◝	**NUP320 E**
2400	3600	●	◴	◝	◝	◴	◴	◝	**NUP2320 E**
2500	3700	◝	◝	◝	◝	◝	◝	◝	**NUP3320**
2500	3300	●	◴	◝	◝	◴	◴	◝	**NUP420**

* Other products also available

https://nppnovoteh.com

5. CYLINDRICAL ROLLER BEARINGS

5.5. Single-row cylindrical roller bearings - type - NUP



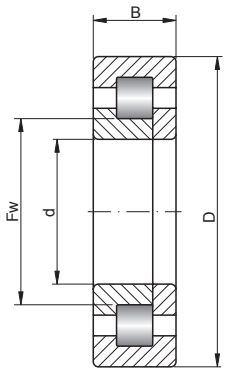

NUP..

105 – 150 mm

Shaft [mm]	Bearing No.	Series		Dimensions [mm]				Weight [kg]	Basic load ratings [kN]	
		SD	SB	d	D	B	Fw		dyn. C	stat. C_0
105	**NUP1921**	9	0	105	145	20	115	1,01	71	102
	NUP1021	0	0	105	160	26	119,5	1,95	108	149
	NUP221 E	2	0	105	190	36	125,5	4,22	201	241
	NUP3221	2	3	105	190	65,1	126,8	8,42	344	482
	NUP5221	2	5	105	190	65,1	126,5	8,36	362	573
	NUP321 E	3	0	105	225	49	133	9,22	440	500
	NUP3321	3	3	105	225	87,3	135	18,32	638	871
	NUP421	4	0	105	260	60	144,5	20,11	471	510
110	**NUP1022**	0	0	110	170	28	125	2,43	134	171
	NUP222 E	2	0	110	200	38	132,5	5,16	293	365
	NUP2222 E	2	2	110	200	53	132,5	7,29	384	517
	NUP3222	2	3	110	200	69,8	132,5	10,05	427	607
	NUP5222	2	5	110	200	69,85	132,9	10,53	464	736
	NUP322 E	3	0	110	240	50	143	11,27	451	525
	NUP2322 E	3	2	110	240	80	143	19,79	680	880
	NUP3322	3	3	110	240	92,1	143	22,21	678	918
	NUP422	4	0	110	280	65	155	20,95	550	621
120	**NUP2924**	9	2	120	180	27	131,5	1,82	116	188
	NUP1024	0	0	120	180	28	135	2,6	137	181
	NUP224 E	2	0	120	215	40	143,5	6,16	336	421
	NUP2224 E	2	2	120	215	58	143,5	9,02	452	619
	NUP3224	2	3	120	215	76	143,5	12,53	477	695
	NUP5224	2	5	120	215	76,2	145,1	12,42	482	794
	NUP324 E	3	0	120	260	55	154	14,11	528	610
	NUP2324 E	3	2	120	260	86	154	24,33	793	1030
	NUP3324	3	3	120	260	106	154	29,8	826	1120
	NUP424	4	0	120	310	72	170	29,49	690	770
130	**NUP1926**	9	0	130	180	24	142	1,89	112	163
	NUP2926	9	2	130	180	30	142	2,39	152	243
	NUP1026	0	0	130	200	33	148	3,97	171	238
	NUP2026	0	2	130	200	42	147	4,84	297	440
	NUP226 E	2	0	130	230	40	153,5	6,95	364	453
	NUP2226 E	2	2	130	230	64	153,5	11,79	530	737
	NUP5226	2	5	130	230	79,38	155	14,53	511	841
	NUP3226	2	3	130	230	80	156	14,85	550	857
	NUP326 E	3	0	130	280	58	167	17,59	616	736
	NUP2326 E	3	2	130	280	93	167	30,65	920	1230
	NUP3326	3	3	130	280	112	167	36,43	936	1290
	NUP426	4	0	130	340	78	185	38,01	771	876
140	**NUP1928**	9	0	140	190	24	152	2	117	177
	NUP2928	9	2	140	190	30	152	2,63	165	275
	NUP1028	0	0	140	210	33	158	4,22	175	250
	NUP228 E	2	0	140	250	42	169	8,95	392	514
	NUP2228 E	2	2	140	250	68	169	15,06	572	835
	NUP5228	2	5	140	250	82,55	168,4	18,01	596	981
	NUP3228	2	3	140	250	88	169	19,48	604	939
	NUP328 E	3	0	140	300	62	180	21,48	663	797
	NUP2328 E	3	2	140	300	102	180	38,75	1020	1380
	NUP3328	3	3	140	300	118	180	43,7	1090	1550
	NUP428	4	0	140	360	82	198	49,28	874	1020
150	**NUP1030**	0	0	150	225	35	169,5	5,09	201	281

- warehouse - order - phone

Limiting speed [rpm]		Basic makes*							Bearing No.
grease	oil	-	M	TV	C2	C3	C4	K	
4100	4900								NUP1921
4100	4800								NUP1021
3300	3900								NUP221 E
2600	3900								NUP3221
3000	3500								NUP5221
2600	3500								NUP321 E
2300	3500								NUP3321
2400	3100								NUP421
3800	4500								NUP1022
3100	3700								NUP222 E
2800	3700								NUP2222 E
2500	3700								NUP3222
3000	3500								NUP5222
2400	3200								NUP322 E
2200	3200								NUP2322 E
2200	3300								NUP3322
2200	2900								NUP422
3700	4600								NUP2924
3500	4200								NUP1024
2800	3400								NUP224 E
2600	3400								NUP2224 E
2300	3400								NUP3224
2700	3200								NUP5224
2200	3000								NUP324 E
2000	3000								NUP2324 E
2000	3000								NUP3324
1900	2600								NUP424
3600	4600								NUP1926
3500	4500								NUP2926
3200	3800								NUP1026
3200	4800								NUP2026
2600	3200								NUP226 E
2400	3200								NUP2226 E
2500	3000								NUP5226
2100	3200								NUP3226
2000	2700								NUP326 E
1800	2700								NUP2326 E
1800	2700								NUP3326
1800	2300								NUP426
3200	4400								NUP1928
3250	4400								NUP2928
3000	3600								NUP1028
2400	2900								NUP228 E
2200	2900								NUP2228 E
2200	2700								NUP5228
1900	2900								NUP3228
1900	2500								NUP328 E
1700	2500								NUP2328 E
1700	2500								NUP3328
1600	2200								NUP428
2800	3300								NUP1030

* Other products also available

https://nppnovoteh.com

5. CYLINDRICAL ROLLER BEARINGS

5.5. Single-row cylindrical roller bearings - type - NUP



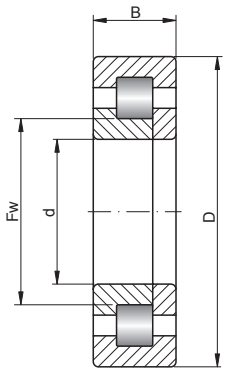

NUP..

150 – 200 mm

Shaft [mm]	Bearing No.	Series		Dimensions [mm]				Weight [kg]	Basic load ratings [kN]	
		SD	SB	d	D	B	Fw		dyn. C	stat. C_0
150 cont.	**NUP3030**	0	3	150	225	56	171	8,45	374	652
	NUP230 E	2	0	150	270	45	182	11,27	448	594
	NUP2230 E	2	2	150	270	73	182	19,69	662	982
	NUP5230	2	5	150	270	88,9	181,5	24,11	736	1260
	NUP3230	2	3	150	270	96	182	24,95	749	1200
	NUP330 E	3	0	150	320	65	193	28,43	757	922
	NUP2330 E	3	2	150	320	108	193	47,07	1180	1600
	NUP3330	3	3	150	320	128	193	54,12	1180	1700
	NUP430	4	0	150	380	85	213	56,12	930	1120
160	**NUP1932**	9	0	160	220	28	175	3,24	149	228
	NUP2932	9	2	160	220	36	175	4,27	199	330
	NUP1032	0	0	160	240	38	180	6,25	236	330
	NUP2032	0	2	160	240	48	179	8,32	418	670
	NUP3132	1	3	160	270	86	187	21,69	681	1070
	NUP232 E	2	0	160	290	48	195	15,58	498	666
	NUP2232 E	2	2	160	290	80	193	24,85	809	1190
	NUP5232	2	5	160	290	98,42	193,6	30,43	764	1310
	NUP3232	2	3	160	290	104	195	31,38	857	1390
	NUP332 E	3	0	160	340	68	204	33,69	857	1050
	NUP2332 E	3	2	160	340	114	204	55,92	1310	1820
	NUP3332	3	3	160	340	136	208	64,76	1270	1890
170	**NUP1034**	0	0	170	260	42	193	8,32	276	400
	NUP2034	0	2	170	260	54	191	11,58	473	735
	NUP3034	0	3	170	260	67	196	13,69	461	824
	NUP234 E	2	0	170	310	52	207	19,59	603	802
	NUP2234 E	2	2	170	310	86	205	30,75	967	1410
	NUP5234	2	5	170	310	104,77	205,4	37,38	891	1470
	NUP3234	2	3	170	310	110	208	38,12	964	1580
	NUP2334 E	3	2	170	360	120	216	65,92	1220	1750
	NUP3334	3	3	170	360	140	220	74,55	1420	2120
	NUP334 E	3	0	170	361	73	218	40,65	809	1010
180	**NUP1036**	0	0	180	280	46	205	11,06	356	503
	NUP3036	0	3	180	280	74	207	18,21	600	1040
	NUP236 E	2	0	180	320	52	217	20,33	626	852
	NUP2236 E	2	2	180	320	86	215	32,01	1010	1510
	NUP3236	2	3	180	320	112	218	40,43	999	1680
	NUP336 E	3	0	180	380	75	231	44,86	917	1150
	NUP2336 E	3	2	180	380	126	227	76,87	1350	1940
	NUP3336	3	3	180	380	150	232	88,87	1660	2520
	NUP436	4	0	180	440	95	247	84,23	1250	1600
190	**NUP1938**	9	0	190	260	33	207,5	5,79	251	400
	NUP1038	0	0	190	290	46	215	11,48	366	530
	NUP3038	0	3	190	290	75	217	19,37	636	1140
	NUP3138	1	3	190	320	104	223	36,33	942	1570
	NUP238 E	2	0	190	340	55	230	24,53	694	954
	NUP2238 E	2	2	190	340	92	228	38,96	1100	1670
	NUP3238	2	3	190	340	120	231	49,28	1310	1930
	NUP338 E	3	0	190	400	78	245	52,54	987	1260
	NUP2338 E	3	2	190	400	132	245	89,19	1520	2220
	NUP3338	3	3	190	400	155	245	101,62	1870	2910
200	**NUP2840**	8	2	200	250	30	211,5	3,73	183	345

- warehouse - order - phone

Limiting speed [rpm]		Basic makes*							Bearing No.
grease	oil	-	M	TV	C2	C3	C4	K	
3000	4300	●	●	●	●	●	●	●	**NUP3030**
2200	2600	■	◴	●	●	◴	◴	●	**NUP230 E**
2000	2600	■	◴	●	●	◴	◴	●	**NUP2230 E**
2000	2400	●	●	●	●	●	●	●	**NUP5230**
1800	2700	●	●	●	●	●	●	●	**NUP3230**
1700	2300	■	◴	●	●	◴	◴	●	**NUP330 E**
1500	2300	◴	◴	●	●	◴	◴	●	**NUP2330 E**
1600	2300	●	●	●	●	●	●	●	**NUP3330**
1500	2000	◴	◴	●	●	◴	◴	●	**NUP430**
2900	4200	●	●	●	●	●	●	●	**NUP1932**
3000	4300	●	●	●	●	●	●	●	**NUP2932**
2600	3000	◴	◴	●	●	◴	◴	●	**NUP1032**
2600	4000	●	●	●	●	●	●	●	**NUP2032**
2500	4000	●	●	●	●	●	●	●	**NUP3132**
2000	2400	◴	◴	●	●	◴	◴	●	**NUP232 E**
1800	2400	◴	◴	●	●	◴	◴	●	**NUP2232 E**
1900	2200	●	●	●	●	●	●	●	**NUP5232**
1600	2500	●	●	●	●	●	●	●	**NUP3232**
1600	2100	◴	◴	●	●	◴	◴	●	**NUP332 E**
1400	2100	◴	◴	●	●	◴	◴	●	**NUP2332 E**
1400	2200	●	●	●	●	●	●	●	**NUP3332**
2400	2800	◴	◴	●	●	◴	◴	●	**NUP1034**
2400	3600	●	●	●	●	●	●	●	**NUP2034**
2700	4000	●	●	●	●	●	●	●	**NUP3034**
1900	2200	◴	◴	●	●	◴	◴	●	**NUP234 E**
1700	2200	◴	◴	●	●	◴	◴	●	**NUP2234 E**
1800	2100	●	●	●	●	●	●	●	**NUP5234**
1500	2300	●	●	●	●	●	●	●	**NUP3234**
1300	2000	◴	◴	●	●	◴	◴	●	**NUP2334 E**
1300	2000	●	●	●	●	●	●	●	**NUP3334**
1500	2000	◴	◴	●	●	◴	◴	●	**NUP334 E**
2200	2600	◴	◴	●	●	◴	◴	●	**NUP1036**
2500	3800	●	●	●	●	●	●	●	**NUP3036**
1800	2100	◴	◴	●	●	◴	◴	●	**NUP236 E**
1600	2100	◴	◴	●	●	◴	◴	●	**NUP2236 E**
1400	2200	●	●	●	●	●	●	●	**NUP3236**
1400	1900	◴	◴	●	●	◴	◴	●	**NUP336 E**
1300	1900	◴	◴	●	●	◴	◴	●	**NUP2336 E**
1300	1900	●	●	●	●	●	●	●	**NUP3336**
1600	2400	◴	◴	●	●	◴	◴	●	**NUP436**
2750	4000	●	●	●	●	●	●	●	**NUP1938**
2100	2500	◴	◴	●	●	◴	◴	●	**NUP1038**
2200	3600	●	●	●	●	●	●	●	**NUP3038**
2000	3200	●	●	●	●	●	●	●	**NUP3138**
1700	2000	◴	◴	●	●	◴	◴	●	**NUP238 E**
1500	2000	◴	◴	●	●	◴	◴	●	**NUP2238 E**
1300	2000	●	●	●	●	●	●	●	**NUP3238**
1300	1800	◴	◴	●	●	◴	◴	●	**NUP338 E**
1200	1800	◴	◴	●	●	◴	◴	●	**NUP2338 E**
1200	1800	●	●	●	●	●	●	●	**NUP3338**
2800	3600	●	●	●	●	●	●	●	**NUP2840**

* Other products also available

https://nppnovoteh.com

5. CYLINDRICAL ROLLER BEARINGS

5.5. Single-row cylindrical roller bearings - type - NUP



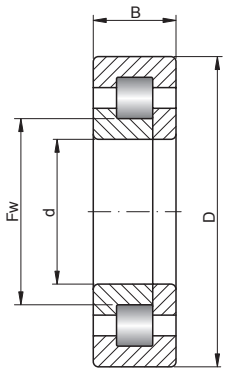

NUP..

200 – 300 mm

Shaft [mm]	Bearing No.	Series		Dimensions [mm]				Weight [kg]	Basic load ratings [kN]	
		SD	SB	d	D	B	Fw		dyn. C	stat. C_0
200 cont.	**NUP1940**	9	0	200	280	38	218	7,79	341	540
	NUP1040	0	0	200	310	51	229	14,85	388	582
	NUP3040	0	3	200	310	82	232	24,95	689	1250
	NUP240 E	2	0	200	360	58	243	28,65	766	1060
	NUP2240 E	2	2	200	360	98	241	46,75	1220	1870
	NUP3240	2	3	200	360	128	244	59,18	1200	2020
	NUP340 E	3	0	200	420	80	258	59,18	987	1270
	NUP2340 E	3	2	200	420	138	253	102,56	1520	2240
	NUP3340	3	3	200	420	165	260	118,99	1870	2930
220	**NUP1944**	9	0	220	300	38	240	8,74	336	560
	NUP2944	9	2	220	300	48	241,5	10,34	366	655
	NUP1044	0	0	220	340	56	250	19,48	507	748
	NUP3144	1	3	220	370	120	261	56,02	1230	2140
	NUP244 E	2	0	220	400	65	268	40,54	766	1080
	NUP2244 E	2	2	220	400	108	259	64,13	1130	1810
	NUP3244	2	3	220	400	144	270	82,97	1630	2880
	NUP344 E	3	0	220	460	88	282	78,35	1200	1570
	NUP2344 E	3	2	220	460	145	277	125,31	1810	2690
	NUP3344	3	3	220	460	180	284	155,84	2130	3300
240	**NUP1048**	0	0	240	360	56	270	21,17	535	822
	NUP3048	0	3	240	360	92	276	34,75	774	1450
	NUP248 E	2	0	240	440	72	293	54,86	949	1340
	NUP2248 E	2	2	240	440	120	287	86,87	1430	2320
	NUP3248	2	3	240	440	160	295	112,67	1950	3460
	NUP348 E	3	0	240	500	95	306	99,61	1430	1950
	NUP2348 E	3	2	240	500	155	303	160,06	2170	3320
	NUP3348	3	3	240	500	195	310	199,01	2540	4070
260	**NUP1952**	9	0	260	360	46	285	14,64	410	686
	NUP2952	9	2	260	360	60	285	19,37	558	1020
	NUP1052	0	0	260	400	65	296	30,75	651	979
	NUP3052	0	3	260	400	104	290,5	52,12	1420	2320
	NUP3152	1	3	260	440	144	308	97,61	1730	3120
	NUP252 E	2	0	260	480	80	317	72,65	1100	1580
	NUP2252 E	2	2	260	480	130	313	112,67	1790	2950
	NUP3252	2	3	260	480	174	320	146,37	2140	3680
	NUP352 E	3	0	260	540	102	337	126,36	1900	2600
	NUP2352 E	3	2	260	540	165	324	194,81	2430	3750
	NUP3352	3	3	260	540	206	336	244,29	2940	4790
280	**NUP3856**	8	3	280	350	52	298	12,11	427	968
	NUP1956	9	0	280	380	46	305	15,48	406	689
	NUP1056	0	0	280	420	65	316	37,07	669	1030
	NUP2056	0	2	280	420	82	314	42,2	1230	2160
	NUP3156	1	3	280	460	146	328	102,35	1810	3280
	NUP256 E	2	0	280	500	80	337	76,55	1140	1680
	NUP2256 E	2	2	280	500	130	333	120,04	2280	3600
	NUP356 E	3	0	280	580	108	362	152,7	2160	3000
	NUP2356 E	3	2	280	580	175	351	243,3	2750	4200
300	**NUP2860**	8	2	300	380	48	321	14,8	473	980
	NUP3860	8	3	300	380	60	322	17,4	543	1300
	NUP1960	9	0	300	420	56	332	24,5	507	873
	NUP1060	0	0	300	460	74	340	46,5	890	1380

- warehouse - order - phone

Limiting speed [rpm]		Basic makes*							Bearing No.
grease	oil	-	M	TV	C2	C3	C4	K	
2600	3800	↻	↻	↻	↻	↻	↻	↻	**NUP1940**
1900	2300	↻	↻	↻	↻	↻	↻	↻	**NUP1040**
2000	3400	↻	↻	↻	↻	↻	↻	↻	**NUP3040**
1600	1900	◴	◴	↻	↻	◴	◴	↻	**NUP240 E**
1400	1900	◴	↻	↻	↻	◴	◴	↻	**NUP2240 E**
1300	1900	↻	↻	↻	↻	↻	↻	↻	**NUP3240**
1200	1700	◴	◴	↻	↻	◴	◴	↻	**NUP340 E**
1100	1700	◴	◴	↻	↻	◴	◴	↻	**NUP2340 E**
1100	1700	↻	↻	↻	↻	↻	↻	↻	**NUP3340**
2400	3200	↻	↻	↻	↻	↻	↻	↻	**NUP1944**
2000	3000	↻	↻	↻	↻	↻	↻	↻	**NUP2944**
1700	2000	↻	↻	↻	↻	↻	↻	↻	**NUP1044**
1700	2700	↻	↻	↻	↻	↻	↻	↻	**NUP3144**
1400	1700	◴	◴	↻	↻	◴	◴	↻	**NUP244 E**
1200	1700	↻	↻	↻	↻	↻	↻	↻	**NUP2244 E**
1100	1700	↻	↻	↻	↻	↻	↻	↻	**NUP3244**
1100	1500	◴	◴	↻	↻	◴	◴	↻	**NUP344 E**
1000	1500	◴	◴	↻	↻	◴	◴	↻	**NUP2344 E**
990	1500	↻	↻	↻	↻	↻	↻	↻	**NUP3344**
1600	1900	↻	↻	↻	↻	↻	↻	↻	**NUP1048**
1600	2600	↻	↻	↻	↻	↻	↻	↻	**NUP3048**
1200	1500	◴	◴	↻	↻	◴	◴	↻	**NUP248 E**
1100	1500	↻	↻	↻	↻	↻	↻	↻	**NUP2248 E**
990	1500	↻	↻	↻	↻	↻	↻	↻	**NUP3248**
990	1300	↻	↻	↻	↻	↻	↻	↻	**NUP348 E**
900	1400	↻	↻	↻	↻	↻	↻	↻	**NUP2348 E**
880	1300	↻	↻	↻	↻	↻	↻	↻	**NUP3348**
2200	2900	↻	↻	↻	↻	↻	↻	↻	**NUP1952**
1600	2400	↻	↻	↻	↻	↻	↻	↻	**NUP2952**
1400	1700	↻	↻	↻	↻	↻	↻	↻	**NUP1052**
1500	2400	↻	↻	↻	↻	↻	↻	↻	**NUP3052**
1400	2300	↻	↻	↻	↻	↻	↻	↻	**NUP3152**
1100	1300	◴	◴	↻	↻	◴	◴	↻	**NUP252 E**
990	1300	↻	↻	↻	↻	↻	↻	↻	**NUP2252 E**
880	1300	↻	↻	↻	↻	↻	↻	↻	**NUP3252**
900	1100	↻	↻	↻	↻	↻	↻	↻	**NUP352 E**
800	1200	↻	↻	↻	↻	↻	↻	↻	**NUP2352 E**
790	1200	↻	↻	↻	↻	↻	↻	↻	**NUP3352**
2000	3300	↻	↻	↻	↻	↻	↻	↻	**NUP3856**
2000	2600	↻	↻	↻	↻	↻	↻	↻	**NUP1956**
1300	1500	↻	↻	↻	↻	↻	↻	↻	**NUP1056**
1400	2200	↻	↻	↻	↻	↻	↻	↻	**NUP2056**
1300	2150	↻	↻	↻	↻	↻	↻	↻	**NUP3156**
1000	1200	◴	◴	↻	↻	◴	◴	↻	**NUP256 E**
900	1250	↻	↻	↻	↻	↻	↻	↻	**NUP2256 E**
800	1000	↻	↻	↻	↻	↻	↻	↻	**NUP356 E**
750	1100	↻	↻	↻	↻	↻	↻	↻	**NUP2356 E**
1700	1700	↻	↻	↻	↻	↻	↻	↻	**NUP2860**
1800	2900	↻	↻	↻	↻	↻	↻	↻	**NUP3860**
1800	2300	↻	↻	↻	↻	↻	↻	↻	**NUP1960**
1200	1400	↻	↻	↻	↻	↻	↻	↻	**NUP1060**

* Other products also available

https://nppnovoteh.com

5. CYLINDRICAL ROLLER BEARINGS

5.5. Single-row cylindrical roller bearings - type - NUP



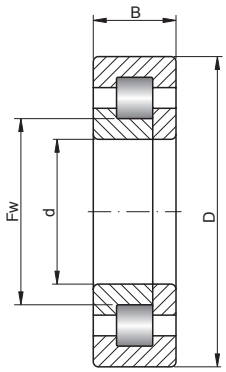

NUP..

300 – 420 mm

Shaft [mm]	Bearing No.	Series		Dimensions [mm]				Weight [kg]	Basic load ratings [kN]	
		SD	SB	d	D	B	Fw		dyn. C	stat. C_0
300 cont.	**NUP2060**	0	2	300	460	95	341	62,7	1510	2750
	NUP3060	0	3	300	460	118	346	75,1	1290	2470
	NUP3160	1	3	300	500	160	352	135,8	2150	3940
	NUP260 E	2	0	300	540	85	364	95,5	1350	1960
	NUP2260	2	2	300	540	140	364	145,3	2400	3800
	NUP2360	3	2	300	620	185	371	284,3	4020	5850
320	**NUP1864**	8	0	320	400	38	341	12,3	369	710
	NUP2864	8	2	320	400	48	341	15,3	495	1060
	NUP1964	9	0	320	440	56	350	28,4	693	1200
	NUP1064	0	0	320	480	74	360	51	913	1450
	NUP2064	0	2	320	480	95	360	65,8	1450	265
	NUP3064	0	3	320	480	121	366	80,4	1320	2590
	NUP3164	1	3	320	540	176	368	184,3	3140	5400
	NUP264 E	2	0	320	580	92	390	120	1540	2270
	NUP2264	2	2	320	580	150	390	181,1	3000	4100
	NUP364	3	0	320	670	112	425	209,5	2300	3200
340	**NUP2868**	8	2	340	420	48	361	15,8	512	1120
	NUP3868	8	3	340	420	60	362	19,1	624	1500
	NUP1968	9	0	340	460	56	370	27,1	605	1080
	NUP2968	9	2	340	460	72	372	36,5	800	1620
	NUP1068	0	0	340	520	82	385	67,5	1090	1750
	NUP3068	0	3	340	520	133	393	107,4	1570	3080
	NUP3168	1	3	340	580	190	399	221,1	3190	5700
	NUP2268	2	2	340	620	165	416	231,7	2640	4500
360	**NUP1872**	8	0	360	440	38	380	12,3	339	692
	NUP1972	9	0	360	480	56	392	28,7	566	1060
	NUP2972	9	2	360	480	72	393	39,2	845	1820
	NUP1072	0	0	360	540	82	405	70,7	1120	1830
	NUP2072	0	2	360	540	106	405	93,2	1940	3600
	NUP3072	0	3	360	540	134	413	116,9	1970	4180
	NUP3172	1	3	360	600	192	405	236,9	3410	5700
	NUP2272	2	2	360	650	170	437	263,3	2920	4900
	NUP2372	3	2	360	750	224	465	537	5010	8150
380	**NUP1876**	8	0	380	480	46	406	24,2	539	1060
	NUP3876	8	3	380	480	75	405	34	852	1970
	NUP1076	0	0	380	560	82	425	73,8	1150	1920
	NUP2076	0	2	380	560	106	425	97,4	1980	3750
	NUP3076	0	3	380	560	135	433	119	1690	3470
	NUP2276	2	2	380	680	175	462	289,5	3140	5500
400	**NUP1880**	8	0	400	500	46	426	21,1	456	924
	NUP3880	8	3	400	500	75	426	36	852	2060
	NUP1980	9	0	400	540	65	435	43,2	952	1730
	NUP1080	0	0	400	600	90	450	95,8	1400	2310
	NUP2080	0	2	400	600	118	449	126,4	2200	4750
	NUP3080	0	3	400	600	148	450	155,8	2250	4370
420	**NUP1884**	8	0	420	520	46	447	21,5	550	1120
	NUP3884	8	3	420	520	75	448	37,3	882	2260
	NUP1984	9	0	420	560	65	456	44,7	800	1510
	NUP2984	9	2	420	560	82	458	62,2	1210	2550
	NUP1084	0	0	420	620	90	470	99,6	1390	2320

- warehouse - order - phone

Limiting speed [rpm]		Basic makes*							Bearing No.
grease	oil	-	M	TV	C2	C3	C4	K	
1300	2000	●	●	●	●	●	●	●	**NUP2060**
1400	2200	●	●	●	●	●	●	●	**NUP3060**
1250	1900	●	●	●	●	●	●	●	**NUP3160**
920	1100	◴	◴	●	●	◴	◴	●	**NUP260 E**
880	1200	●	●	●	●	●	●	●	**NUP2260**
950	1600	●	●	●	●	●	●	●	**NUP2360**
1600	2400	●	●	●	●	●	●	●	**NUP1864**
1600	2400	●	●	●	●	●	●	●	**NUP2864**
1700	2100	●	●	●	●	●	●	●	**NUP1964**
1100	1300	●	●	●	●	●	●	●	**NUP1064**
1200	1900	●	●	●	●	●	●	●	**NUP2064**
1350	2000	●	●	●	●	●	●	●	**NUP3064**
1000	1700	●	●	●	●	●	●	●	**NUP3164**
840	1000	◴	◴	●	●	◴	◴	●	**NUP264 E**
850	1150	●	●	●	●	●	●	●	**NUP2264**
750	950	●	●	●	●	●	●	●	**NUP364**
1500	2000	●	●	●	●	●	●	●	**NUP2868**
1500	2200	●	●	●	●	●	●	●	**NUP3868**
1600	2000	●	●	●	●	●	●	●	**NUP1968**
1400	1900	●	●	●	●	●	●	●	**NUP2968**
980	1200	●	●	●	●	●	●	●	**NUP1068**
1300	1900	●	●	●	●	●	●	●	**NUP3068**
950	1600	●	●	●	●	●	●	●	**NUP3168**
1000	1500	●	●	●	●	●	●	●	**NUP2268**
1450	2200	●	●	●	●	●	●	●	**NUP1872**
1400	1800	●	●	●	●	●	●	●	**NUP1972**
1200	1700	●	●	●	●	●	●	●	**NUP2972**
920	1100	●	●	●	●	●	●	●	**NUP1072**
1100	1600	●	●	●	●	●	●	●	**NUP2072**
1200	1700	●	●	●	●	●	●	●	**NUP3072**
900	1500	●	●	●	●	●	●	●	**NUP3172**
950	1400	●	●	●	●	●	●	●	**NUP2272**
850	1300	●	●	●	●	●	●	●	**NUP2372**
1300	2000	●	●	●	●	●	●	●	**NUP1876**
1200	1800	●	●	●	●	●	●	●	**NUP3876**
860	1000	●	●	●	●	●	●	●	**NUP1076**
1000	1600	●	●	●	●	●	●	●	**NUP2076**
1100	1600	●	●	●	●	●	●	●	**NUP3076**
900	1400	●	●	●	●	●	●	●	**NUP2276**
1250	1800	●	●	●	●	●	●	●	**NUP1880**
1100	1600	●	●	●	●	●	●	●	**NUP3880**
1200	1600	●	●	●	●	●	●	●	**NUP1980**
780	920	●	●	●	●	●	●	●	**NUP1080**
950	1400	●	●	●	●	●	●	●	**NUP2080**
1000	1500	●	●	●	●	●	●	●	**NUP3080**
1200	1600	●	●	●	●	●	●	●	**NUP1884**
900	1100	●	●	●	●	●	●	●	**NUP3884**
1150	1500	●	●	●	●	●	●	●	**NUP1984**
1100	1500	●	●	●	●	●	●	●	**NUP2984**
730	860	●	●	●	●	●	●	●	**NUP1084**

* Other products also available

https://nppnovoteh.com

5. CYLINDRICAL ROLLER BEARINGS

5.5. Single-row cylindrical roller bearings - type - NUP



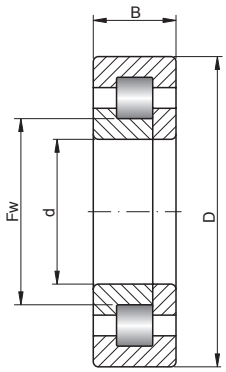

NUP..

420 – 560 mm

Shaft [mm]	Bearing No.	Series		Dimensions [mm]				Weight [kg]	Basic load ratings [kN]	
		SD	SB	d	D	B	Fw		dyn. C	stat. C_0
420 cont.	**NUP2084**	0	2	420	620	118	469	131,6	2460	4750
	NUP3084	0	3	420	620	150	470	164,3	1380	4770
	NUP3184	1	3	420	700	224	485	400,1	4950	9000
440	**NUP2888**	8	2	440	540	60	464	35,8	809	1900
	NUP1988	9	0	440	600	74	482	67,4	1060	2000
	NUP2988	9	2	440	600	95	482	88,4	1720	3600
	NUP3988	9	3	440	600	118	482	110,6	1980	4250
	NUP1088	0	0	440	650	94	493	114,8	1490	2520
	NUP2088	0	2	440	650	122	487	152,7	2550	4900
	NUP3188	1	3	440	720	226	509	415,9	5120	9650
460	**NUP2892**	8	2	460	580	72	489	50,6	1080	2400
	NUP1992	9	0	460	620	74	500	64	1060	1990
	NUP2992	9	2	460	620	95	495	93,7	1720	3600
	NUP1092	0	0	460	680	100	516	133,7	1590	2730
	NUP2092	0	2	460	680	128	513	173,7	2810	5400
	NUP3092	0	3	460	680	163	519	216,9	2960	6150
	NUP3192	1	3	460	760	240	529,5	479,1	5280	9650
	NUP1292	2	0	460	830	165	554	437	4180	6800
	NUP2292	2	2	460	830	212	554	558	5120	8650
480	**NUP1896**	8	0	480	600	56	511	41,6	765	1630
	NUP2896	8	2	480	600	72	511	50	1100	2450
	NUP1996	9	0	480	650	78	525	76,5	1130	2200
	NUP2996	9	2	480	650	100	525	101,9	1600	3450
	NUP1096	0	0	480	700	100	536	141,1	1700	3100
	NUP2096	0	2	480	700	128	533	179	2860	5600
	NUP3096	0	3	480	700	165	539	227,5	3030	6410
	NUP3196	1	3	480	790	248	547	526,5	5940	10800
500	**NUP18/500**	8	0	500	620	56	534	39,3	705	1560
	NUP28/500	8	2	500	620	72	530	52,6	1170	2700
	NUP38/500	8	3	500	620	90	534	65	1210	3140
	NUP19/500	9	0	500	670	78	546	82,7	1480	3160
	NUP29/500	9	2	500	670	100	546	106,4	1940	4500
	NUP39/500	9	3	500	670	128	544	136,9	2330	5200
	NUP10/500	0	0	500	720	100	556	148,5	2270	4440
	NUP20/500	0	2	500	720	128	553	189,5	2920	5850
	NUP30/500	0	3	500	720	167	553	236,9	4020	8000
	NUP31/500	1	3	500	830	264	576	626,5	6440	12000
	NUP12/500	2	0	500	920	185	603	616	5280	8500
530	**NUP28/530**	8	2	530	650	72	560,5	54	1170	2750
	NUP19/530	9	0	530	710	82	575	92	1320	2560
	NUP29/530	9	2	530	710	106	577	124	2160	4850
	NUP10/530	0	0	530	780	112	589	200	2290	4050
	NUP20/530	0	2	530	780	145	591	269	3740	7350
	NUP30/530 E	0	3	530	780	185	589	325	4740	10100
	NUP31/530	1	3	530	870	272	612	695	7480	14600
560	**NUP18/560**	8	0	560	680	56	591	47	809	1830
	NUP19/560	9	0	560	750	85	613	111	1600	3260
	NUP29/560	9	2	560	750	112	613	148	2040	4480
	NUP10/560	0	0	560	820	115	630	222	2890	5630
	NUP20/560	0	2	560	820	150	626	306	3800	7650

- warehouse - order - phone

Limiting speed [rpm]		Basic makes*							Bearing No.
grease	oil	-	M	TV	C2	C3	C4	K	
900	1400								**NUP2084**
900	1400								**NUP3084**
750	1300								**NUP3184**
1100	1500								**NUP2888**
1100	1400								**NUP1988**
1100	1400								**NUP2988**
900	1100								**NUP3988**
680	800								**NUP1088**
8500	1300								**NUP2088**
700	1200								**NUP3188**
1100	1400								**NUP2892**
1000	1350								**NUP1992**
1000	1300								**NUP2992**
630	750								**NUP1092**
800	1200								**NUP2092**
850	1300								**NUP3092**
670	1100								**NUP3192**
750	1100								**NUP1292**
700	1100								**NUP2292**
1000	1300								**NUP1896**
1000	1300								**NUP2896**
950	1300								**NUP1996**
900	1200								**NUP2996**
600	700								**NUP1096**
750	1200								**NUP2096**
800	1200								**NUP3096**
630	1100								**NUP3196**
900	1200								**NUP18/500**
950	1300								**NUP28/500**
800	1000								**NUP38/500**
900	1250								**NUP19/500**
860	1100								**NUP29/500**
800	1200								**NUP39/500**
570	650								**NUP10/500**
750	1100								**NUP20/500**
750	1100								**NUP30/500**
600	1000								**NUP31/500**
670	950								**NUP12/500**
900	1200								**NUP28/530**
870	1190								**NUP19/530**
830	1050								**NUP29/530**
800	1000								**NUP10/530**
670	1000								**NUP20/530**
700	1000								**NUP30/530 E**
560	950								**NUP31/530**
850	1100								**NUP18/560**
830	1100								**NUP19/560**
780	1000								**NUP29/560**
540	600								**NUP10/560**
630	1000								**NUP20/560**

* Other products also available

https://nppnovoteh.com

5. CYLINDRICAL ROLLER BEARINGS

5.5. Single-row cylindrical roller bearings - type - NUP



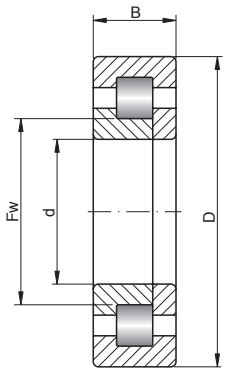

NUP..

560 – 1000 mm

Shaft [mm]	Bearing No.	Series		Dimensions [mm]				Weight [kg]	Basic load ratings [kN]	
		SD	SB	d	D	B	Fw		dyn. C	stat. C_0
560 cont.	**NUP31/560**	1	3	560	920	280	648	785	7420	15100
	NUP12/560	2	0	560	1030	206	668	847	7210	11200
600	**NUP18/600**	8	0	600	730	60	632	53	897	2040
	NUP28/600	8	2	600	730	78	632	74	1320	3450
	NUP19/600	9	0	600	800	90	652	132	1980	4170
	NUP29/600	9	2	600	800	118	649	173	2920	6550
	NUP10/600	0	0	600	870	118	661	258	2750	5100
	NUP20/600	0	2	600	870	155	661	343	4180	8000
	NUP30/600	0	3	600	870	200	661	437	5390	11000
	NUP2/600	2	0	600	1090	155	749	748	5610	9800
630	**NUP18/630**	8	0	630	780	69	667	79	1100	2500
	NUP28/630	8	2	630	780	88	671	96	1510	3690
	NUP19/630	9	0	630	850	100	689	173	2450	5240
	NUP29/630	9	2	630	850	128	689	222	3100	7080
	NUP10/630	0	0	630	920	128	699	300	3410	6200
	NUP20/630	0	2	630	920	170	699	422	4730	9500
	NUP30/630	0	3	630	920	212	699	516	6440	14300
	NUP12/630	2	0	630	1150	230	751	1158	8580	13700
670	**NUP18/670**	8	0	670	820	69	708	81	1530	3750
	NUP19/670	9	0	670	900	103	728	205	2330	4750
	NUP10/670	0	0	670	980	136	747	368	3740	6800
	NUP20/670	0	2	670	980	180	747	506	5390	11000
	NUP30/670	0	3	670	980	230	747	632	6600	14000
710	**NUP18/710**	8	0	710	870	74	751	101	1750	4400
	NUP19/710	9	0	710	950	106	774	227	2910	6370
	NUP29/710	9	2	710	950	140	774	293	3650	8530
	NUP10/710	0	0	710	1030	140	778	437	4680	8500
	NUP20/710	0	2	710	1030	185	778	568	5940	12000
750	**NUP18/750**	8	0	750	920	78	794	121	1470	3450
	NUP10/750	0	0	750	1090	150	830	516	4730	8800
	NUP20/750	0	2	750	1090	195	830	669	7040	14600
800	**NUP18/800**	8	0	800	980	82	846	153	1720	4150
	NUP10/800	0	0	800	1150	155	890	574	5180	10900
	NUP20/800	0	2	800	1150	200	882	753	7040	14600
850	**NUP28/850**	8	2	850	1030	106	900	185	2120	5960
	NUP19/850	9	0	850	1120	118	917	326	3630	8190
900	**NUP18/900**	8	0	900	1090	85	949	179	1980	4900
	NUP28/900	8	2	900	1090	112	949	247	2700	7200
	NUP19/900	9	0	900	1180	122	969	400	4130	8800
	NUP29/900	9	2	900	1180	165	969	590	5830	14000
950	**NUP38/950**	8	3	950	1150	150	1002	328	4030	12100
	NUP29/950	9	2	950	1250	175	1024	785	5830	14000
1000	**NUP18/1000**	8	0	1000	1220	100	1053	279	2640	6550
	NUP28/1000	8	2	1000	1220	128	1053	363	3690	10000
	NUP29/1000	9	2	1000	1320	185	1082	737	7040	17300

- warehouse - order - phone

Limiting speed [rpm]		Basic makes*							Bearing No.
grease	oil	-	M	TV	C2	C3	C4	K	
540	900								**NUP31/560**
560	800								**NUP12/560**
800	1000								**NUP18/600**
750	1000								**NUP28/600**
800	1050								**NUP19/600**
750	950								**NUP29/600**
700	900								**NUP10/600**
600	900								**NUP20/600**
600	900								**NUP30/600**
480	850								**NUP2/600**
800	1000								**NUP18/630**
650	850								**NUP28/630**
700	950								**NUP19/630**
680	850								**NUP29/630**
630	850								**NUP10/630**
560	850								**NUP20/630**
530	850								**NUP30/630**
450	700								**NUP12/630**
750	950								**NUP18/670**
630	850								**NUP19/670**
600	800								**NUP10/670**
500	800								**NUP20/670**
500	800								**NUP30/670**
700	900								**NUP18/710**
570	760								**NUP19/710**
600	800								**NUP29/710**
560	750								**NUP10/710**
480	700								**NUP20/710**
600	800								**NUP18/750**
430	670								**NUP10/750**
430	670								**NUP20/750**
530	700								**NUP18/800**
510	550								**NUP10/800**
400	630								**NUP20/800**
500	700								**NUP28/850**
500	650								**NUP19/850**
450	600								**NUP18/900**
450	600								**NUP28/900**
430	560								**NUP19/900**
430	560								**NUP29/900**
400	600								**NUP38/950**
400	530								**NUP29/950**
400	530								**NUP18/1000**
400	530								**NUP28/1000**
360	480								**NUP29/1000**

* Other products also available

https://nppnovoteh.com

5. CYLINDRICAL ROLLER BEARINGS

5.5. Single-row cylindrical roller bearings - type - NUP



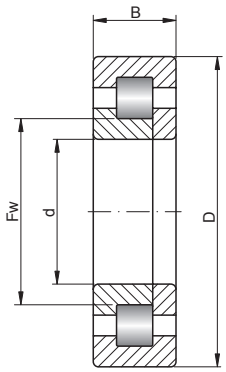

NUP..

1060– 1700 mm

Shaft [mm]	Bearing No.	Series		Dimensions [mm]				Weight [kg]	Basic load ratings [kN]	
		SD	SB	d	D	B	Fw		dyn. C	stat. C_0
1060	**NUP29/1060**	9	2	1060	1400	195	1146	916	7210	17300
	NUP39/1060	9	3	1060	1400	250	1146	1127	9130	24000
1120	**NUP18/1120**	8	0	1120	1360	106	1182	353	3410	8650
	NUP30/1120	0	3	1120	1580	345	1231	2264	15700	39000
1180	**NUP18/1180**	8	0	1180	1420	106	1242	368	3030	7800
	NUP29/1180	9	2	1180	1540	206	1258	1148	8970	21600
1320	**NUP18/1320**	8	0	1320	1600	122	1395	558	3800	10000
	NUP29/1320	9	2	1320	1720	230	1420	1579	11400	30500
1600	**NUP18/1600**	8	0	1600	1950	155	1694	1038	7060	20100
1700	**NUP18/1700**	8	0	1700	2060	160	1784	1211	7210	19300

- warehouse - order - phone

Limiting speed [rpm]		Basic makes*							Bearing No.
grease	oil	-	M	TV	C2	C3	C4	K	
280	340	✓	✓	✓	✓	✓	✓	✓	**NUP29/1060**
260	320	✓	✓	✓	✓	✓	✓	✓	**NUP39/1060**
280	340	✓	✓	✓	✓	✓	✓	✓	**NUP18/1120**
190	240	✓	✓	✓	✓	✓	✓	✓	**NUP30/1120**
260	320	✓	✓	✓	✓	✓	✓	✓	**NUP18/1180**
190	240	✓	✓	✓	✓	✓	✓	✓	**NUP29/1180**
260	340	✓	✓	✓	✓	✓	✓	✓	**NUP18/1320**
240	320	✓	✓	✓	✓	✓	✓	✓	**NUP29/1320**
200	240	✓	✓	✓	✓	✓	✓	✓	**NUP18/1600**
160	200	✓	✓	✓	✓	✓	✓	✓	**NUP18/1700**

* Other products also available

https://nppnovoteh.com

5. CYLINDRICAL ROLLER BEARINGS

5.6. Single-row cylindrical roller bearings - types - N, NF, NP



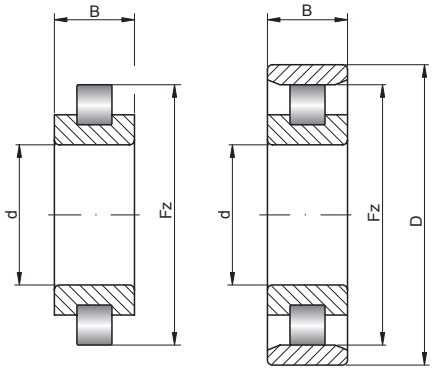

15 – 45 mm

Shaft [mm]	Bearing No.	Series		Dimensions [mm]				Weight [kg]	Basic load ratings [kN]	
		SD	SB	d	D	B	Fz		dyn. C	stat. C_0
15	**N202 E**	2	0	15	35	11	30,3	0,047	13,5	11,6
	NF202 E	2	0	15	35	11	30,3	0,051	13,5	11,6
	NP202 E	2	0	15	35	11	30,3	0,053	13,5	11,6
17	**N203 E**	2	0	17	40	12	35,1	0,067	14,8	12,1
	NF203 E	2	0	17	40	12	35,1	0,072	14,8	12,1
	NP203 E	2	0	17	40	12	35,1	0,075	14,8	12,1
20	**N204 E**	2	0	20	47	14	41,5	0,108	15,4	12,7
	NF204 E	2	0	20	47	14	41,5	0,117	15,4	12,7
	NP204 E	2	0	20	47	14	41,5	0,122	15,4	12,7
	N304 E	3	0	20	52	15	45,5	0,147	23,1	19,2
	NF304 E	3	0	20	52	15	45,5	0,158	23,1	19,2
	NP304 E	3	0	20	52	15	45,5	0,165	23,1	19,2
25	**N205 E**	2	0	25	52	15	46,5	0,132	17,7	15,7
	NF205 E	2	0	25	52	15	46,5	0,142	17,7	15,7
	NP205 E	2	0	25	52	15	46,5	0,148	17,7	15,7
	N305 E	3	0	25	62	17	54	0,241	29,3	25,2
	NF305 E	3	0	25	62	17	54	0,26	29,3	25,2
	NP305 E	3	0	25	62	17	54	0,271	29,3	25,2
30	**N206 E**	2	0	30	62	16	55,5	0,2	23,5	21,5
	NF206 E	2	0	30	62	16	55,5	0,216	23,5	21,5
	NP206 E	2	0	30	62	16	55,5	0,225	23,5	21,5
	N306 E	3	0	30	72	19	62,5	0,358	38,6	35,2
	NF306 E	3	0	30	72	19	62,5	0,387	38,6	35,2
	NP306 E	3	0	30	72	19	62,5	0,403	38,6	35,2
	N406	4	0	30	90	23	73	0,753	62,8	55
	NF406	4	0	30	90	23	73	0,812	62,8	55
	NP406	4	0	30	90	23	73	0,846	62,8	55
35	**N207 E**	2	0	35	72	17	64	0,293	33,6	31,5
	NF207 E	2	0	35	72	17	64	0,317	33,6	31,5
	NP207 E	2	0	35	72	17	64	0,33	33,6	31,5
	N307 E	3	0	35	80	21	70,2	0,477	49,6	46,9
	NF307 E	3	0	35	80	21	70,2	0,515	49,6	46,9
	NP307 E	3	0	35	80	21	70,2	0,536	49,6	46,9
	N407	4	0	35	100	25	83	1,02	75,2	68,9
	NF407	4	0	35	100	25	83	1,1	75,2	68,9
	NP407	4	0	35	100	25	83	1,146	75,2	68,9
40	**N208 E**	2	0	40	80	18	71,5	0,366	43,8	42,9
	NF208 E	2	0	40	80	18	71,5	0,395	43,8	42,9
	NP208 E	2	0	40	80	18	71,5	0,411	43,8	42,9
	N308 E	3	0	40	90	23	80	0,657	58,6	56,9
	NF308 E	3	0	40	90	23	80	0,709	58,6	56,9
	NP308 E	3	0	40	90	23	80	0,739	58,6	56,9
	N408	4	0	40	110	27	92	1,3	97,1	89,1
	NF408	4	0	40	110	27	92	1,403	97,1	89,1
	NP408	4	0	40	110	27	92	1,461	97,1	89,1
45	**N209 E**	2	0	45	85	19	76,5	0,427	46,1	46,9
	NF209 E	2	0	45	85	19	76,5	0,461	46,1	46,9
	NP209 E	2	0	45	85	19	76,5	0,48	46,1	46,9
	N309 E	3	0	45	100	25	88,5	0,87	78,8	77,5

- warehouse - order - phone

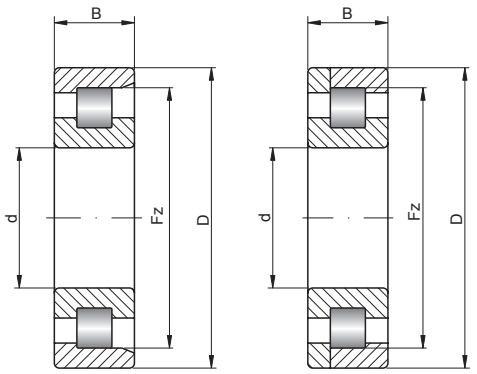

Limiting speed [rpm]		Basic makes*							Bearing No.
grease	oil	-	M	TV	C2	C3	C4	K	
20000	23000	●	○	○	○	○	○	○	**N202 E**
20000	23000	○	○	○	○	○	○	○	**NF202 E**
20000	23000	○	○	○	○	○	○	○	**NP202 E**
18000	21000	●	○	○	○	○	○	○	**N203 E**
18000	21000	○	○	○	○	○	○	○	**NF203 E**
18000	21000	○	○	○	○	○	○	○	**NP203 E**
15000	18000	●	○	○	○	○	○	○	**N204 E**
15000	18000	○	○	○	○	○	○	○	**NF204 E**
15000	18000	○	○	○	○	○	○	○	**NP204 E**
12000	16000	●	○	○	○	◴	◴	○	**N304 E**
12000	16000	○	○	○	○	○	○	○	**NF304 E**
12000	16000	○	○	○	○	○	○	○	**NP304 E**
13000	16000	●	○	○	○	◴	◴	○	**N205 E**
13000	16000	○	○	○	○	○	○	○	**NF205 E**
13000	16000	○	○	○	○	○	○	○	**NP205 E**
10000	14000	●	○	○	○	◴	◴	○	**N305 E**
10000	14000	○	○	○	○	○	○	○	**NF305 E**
10000	14000	○	○	○	○	○	○	○	**NP305 E**
11000	13000	●	○	○	○	◴	◴	○	**N206 E**
11000	13000	○	○	○	○	○	○	○	**NF206 E**
11000	13000	○	○	○	○	○	○	○	**NP206 E**
8700	12000	●	○	○	○	◴	◴	○	**N306 E**
8700	12000	○	○	○	○	○	○	○	**NF306 E**
8700	12000	○	○	○	○	○	○	○	**NP306 E**
7600	10000	◴	○	○	○	○	○	○	**N406**
7600	10000	○	○	○	○	○	○	○	**NF406**
7600	10000	○	○	○	○	○	○	○	**NP406**
9500	11000	●	○	○	○	◴	◴	○	**N207 E**
9500	11000	○	○	○	○	○	○	○	**NF207 E**
9500	11000	○	○	○	○	○	○	○	**NP207 E**
7900	10000	●	○	○	○	◴	◴	○	**N307 E**
7900	10000	○	○	○	○	○	○	○	**NF307 E**
7900	10000	○	○	○	○	○	○	○	**NP307 E**
6600	8800	◴	○	○	○	○	○	○	**N407**
6600	8800	○	○	○	○	○	○	○	**NF407**
6600	8800	○	○	○	○	○	○	○	**NP407**
8300	10000	●	○	○	○	◴	◴	○	**N208 E**
8300	10000	○	○	○	○	○	○	○	**NF208 E**
8300	10000	○	○	○	○	○	○	○	**NP208 E**
6900	9100	●	○	○	○	◴	◴	○	**N308 E**
6900	9100	○	○	○	○	○	○	○	**NF308 E**
6900	9100	○	○	○	○	○	○	○	**NP308 E**
6000	8000	◴	○	○	○	○	○	○	**N408**
6000	8000	○	○	○	○	○	○	○	**NF408**
6000	8000	○	○	○	○	○	○	○	**NP408**
7700	9200	●	○	○	○	◴	◴	○	**N209 E**
7700	9200	○	○	○	○	○	○	○	**NF209 E**
7700	9200	○	○	○	○	○	○	○	**NP209 E**
6200	8300	●	○	○	○	◴	◴	○	**N309 E**

* Other products also available

https://nppnovoteh.com

5. CYLINDRICAL ROLLER BEARINGS

5.6. Single-row cylindrical roller bearings - types - N, NF, NP



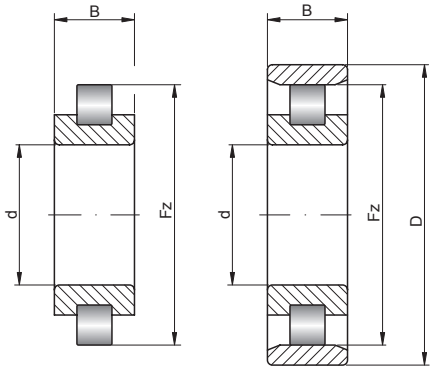

45 – 70 mm

Shaft [mm]	Bearing No.	Series		Dimensions [mm]				Weight [kg]	Basic load ratings [kN]	
		SD	SB	d	D	B	Fz		dyn. C	stat. C_0
45 cont.	**NF309 E**	3	0	45	100	25	88,5	0,938	78,8	77,5
	NP309 E	3	0	45	100	25	88,5	0,977	78,8	77,5
	N409	4	0	45	120	29	100,5	1,64	115	112
	NF409	4	0	45	120	29	100,5	1,769	115	112
	NP409	4	0	45	120	29	100,5	1,843	115	112
50	**N210 E**	2	0	50	90	20	81,5	0,479	48,2	51
	NF210 E	2	0	50	90	20	81,5	0,517	48,2	51
	NP210 E	2	0	50	90	20	81,5	0,539	48,2	51
	N310 E	3	0	50	110	27	97	1,15	92,2	93,4
	NF310 E	3	0	50	110	27	97	1,241	92,2	93,4
	NP310 E	3	0	50	110	27	97	1,293	92,2	93,4
	N410	4	0	50	130	31	110,8	2,01	139	136
	NF410	4	0	50	130	31	110,8	2,169	139	136
	NP410	4	0	50	130	31	110,8	2,259	139	136
55	**N211 E**	2	0	55	100	21	90	0,64	58	62,3
	NF211 E	2	0	55	100	21	90	0,69	58	62,3
	NP211 E	2	0	55	100	21	90	0,719	58	62,3
	N311 E	3	0	55	120	29	106,5	1,44	111	111
	NF311 E	3	0	55	120	29	106,5	1,553	111	111
	NP311 E	3	0	55	120	29	106,5	1,618	111	111
	N411	4	0	55	140	33	117,2	2,51	142	138
	NF411	4	0	55	140	33	117,2	2,707	142	138
	NP411	4	0	55	140	33	117,2	2,82	142	138
60	**N212 E**	2	0	60	110	22	100	0,823	71,9	79,9
	NF212 E	2	0	60	110	22	100	0,888	71,9	79,9
	NP212 E	2	0	60	110	22	100	0,925	71,9	79,9
	N312 E	3	0	60	130	31	115	1,83	124	126
	NF312 E	3	0	60	130	31	115	1,974	124	126
	NP312 E	3	0	60	130	31	115	2,056	124	126
	N412	4	0	60	150	35	127	3,02	178	184
	NF412	4	0	60	150	35	127	3,258	178	184
	NP412	4	0	60	150	35	127	3,394	178	184
65	**N213 E**	2	0	65	120	23	108,5	1,05	83,8	94,4
	NF213 E	2	0	65	120	23	108,5	1,132	83,8	94,4
	NP213 E	2	0	65	120	23	108,5	1,179	83,8	94,4
	N313 E	3	0	65	140	33	124,5	2,24	137	139
	NF313 E	3	0	65	140	33	124,5	2,416	137	139
	NP313 E	3	0	65	140	33	124,5	2,517	137	139
	N413	4	0	65	160	37	135,3	3,58	198	203
	NF413	4	0	65	160	37	135,3	3,861	198	203
	NP413	4	0	65	160	37	135,3	4,022	198	203
70	**N214 E**	2	0	70	125	24	113,5	1,15	83,3	95,2
	NF214 E	2	0	70	125	24	113,5	1,241	83,3	95,2
	NP214 E	2	0	70	125	24	113,5	1,293	83,3	95,2
	N314 E	3	0	70	150	35	133	2,73	162	168
	NF314 E	3	0	70	150	35	133	2,944	162	168
	NP314 E	3	0	70	150	35	133	3,067	162	168
	N414	4	0	70	180	42	152	5,26	246	257
	NF414	4	0	70	180	42	152	5,674	246	257
	NP414	4	0	70	180	42	152	5,91	246	257

- warehouse - order - phone

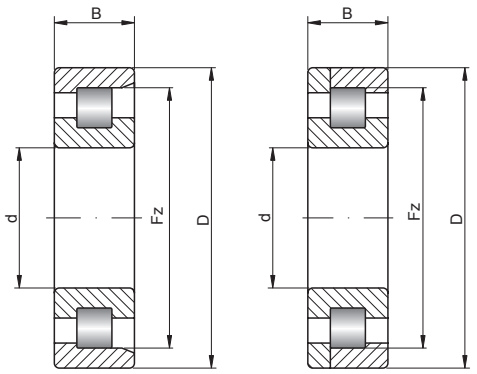

Limiting speed [rpm]		Basic makes*							Bearing No.
grease	oil	-	M	TV	C2	C3	C4	K	
6200	8300								**NF309 E**
6200	8300								**NP309 E**
5400	7200								**N409**
5400	7200								**NF409**
5400	7200								**NP409**
7100	8500								**N210 E**
7100	8500								**NF210 E**
7100	8500								**NP210 E**
5600	7500								**N310 E**
5600	7500								**NF310 E**
5600	7500								**NP310 E**
4900	6600								**N410**
4900	6600								**NF410**
4900	6600								**NP410**
6400	7700								**N211 E**
6400	7700								**NF211 E**
6400	7700								**NP211 E**
5100	6800								**N311 E**
5100	6800								**NF311 E**
5100	6800								**NP311 E**
4600	6100								**N411**
4600	6100								**NF411**
4600	6100								**NP411**
5800	7000								**N212 E**
5800	7000								**NF212 E**
5800	7000								**NP212 E**
4700	6300								**N312 E**
4700	6300								**NF312 E**
4700	6300								**NP312 E**
4200	5700								**N412**
4200	5700								**NF412**
4200	5700								**NP412**
5400	6400								**N213 E**
5400	6400								**NF213 E**
5400	6400								**NP213 E**
4300	5800								**N313 E**
4300	5800								**NF313 E**
4300	5800								**NP313 E**
4000	5300								**N413**
4000	5300								**NF413**
4000	5300								**NP413**
5100	6100								**N214 E**
5100	6100								**NF214 E**
5100	6100								**NP214 E**
4000	5400								**N314 E**
4000	5400								**NF314 E**
4000	5400								**NP314 E**
3500	4700								**N414**
3500	4700								**NF414**
3500	4700								**NP414**

* Other products also available

https://nppnovoteh.com

5. CYLINDRICAL ROLLER BEARINGS

5.6. Single-row cylindrical roller bearings - types - N, NF, NP



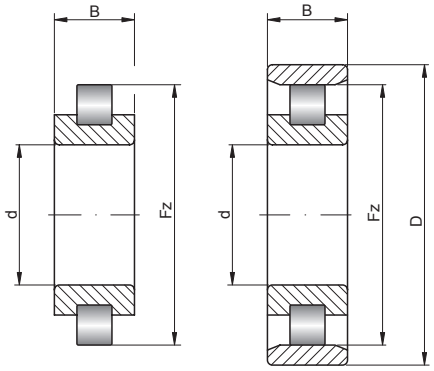

75 – 100 mm

Shaft [mm]	Bearing No.	Series		Dimensions [mm]				Weight [kg]	Basic load ratings [kN]	
		SD	SB	d	D	B	Fz		dyn. C	stat. C_0
75	**N215 E**	2	0	75	130	25	118,5	1,24	101	118
	NF215 E	2	0	75	130	25	118,5	1,338	101	118
	NP215 E	2	0	75	130	25	118,5	1,394	101	118
	N315 E	3	0	75	160	37	143	3,24	194	205
	NF315 E	3	0	75	160	37	143	3,495	194	205
	NP315 E	3	0	75	160	37	143	3,641	194	205
	N415	4	0	75	190	45	160,5	6,25	265	274
	NF415	4	0	75	190	45	160,5	6,742	265	274
	NP415	4	0	75	190	45	160,5	7,023	265	274
80	**N216 E**	2	0	80	140	26	127,3	1,51	106	122
	NF216 E	2	0	80	140	26	127,3	1,628	106	122
	NP216 E	2	0	80	140	26	127,3	1,696	106	122
	N316 E	3	0	80	170	39	151	3,92	194	207
	NF316 E	3	0	80	170	39	151	4,23	194	207
	NP316 E	3	0	80	170	39	151	4,404	194	207
	N416	4	0	80	200	48	170	7,28	302	315
	NF416	4	0	80	200	48	170	7,85	302	315
	NP416	4	0	80	200	48	170	8,18	302	315
85	**N217 E**	2	0	85	150	28	136,5	1,9	121	140
	NF217 E	2	0	85	150	28	136,5	2,05	121	140
	NP217 E	2	0	85	150	28	136,5	2,135	121	140
	N317 E	3	0	85	180	41	160	4,52	225	247
	NF317 E	3	0	85	180	41	160	4,88	225	247
	NP317 E	3	0	85	180	41	160	5,079	225	247
	N417	4	0	85	210	52	177	8,68	340	350
	NF417	4	0	85	210	52	177	9,36	340	350
	NP417	4	0	85	210	52	177	9,753	340	350
90	**N218 E**	2	0	90	160	30	145	2,28	152	178
	NF218 E	2	0	90	160	30	145	2,46	152	178
	NP218 E	2	0	90	160	30	145	2,56	152	178
	N318 E	3	0	90	190	43	169,5	5,38	243	265
	NF318 E	3	0	90	190	43	169,5	5,81	243	265
	NP318 E	3	0	90	190	43	169,5	6,05	243	265
	N418	4	0	90	225	54	191,5	10,3	374	400
	NF418	4	0	90	225	54	191,5	11,11	374	400
	NP418	4	0	90	225	54	191,5	11,57	374	400
95	**N219 E**	2	0	95	170	32	154,5	2,8	165	195
	NF219 E	2	0	95	170	32	154,5	3,02	165	195
	NP219 E	2	0	95	170	32	154,5	3,15	165	195
	N319 E	3	0	95	200	45	177,5	6,2	277	311
	NF319 E	3	0	95	200	45	177,5	6,69	277	311
	NP319 E	3	0	95	200	45	177,5	6,97	277	311
	N419	4	0	95	240	55	201,5	13,6	410	444
	NF419	4	0	95	240	55	201,5	14,67	410	444
	NP419	4	0	95	240	55	201,5	15,28	410	444
100	**N1920**	9	0	100	140	20	130	0,912	67,7	94,4
	NF1920	9	0	100	140	20	130	0,98	67,7	94,4
	NP1920	9	0	100	140	20	130	1,02	67,7	94,4
	N220 E	2	0	100	180	34	163	3,38	183	217
	NF220 E	2	0	100	180	34	163	3,65	183	217
	NP220 E	2	0	100	180	34	163	3,8	183	217

- warehouse - order - phone

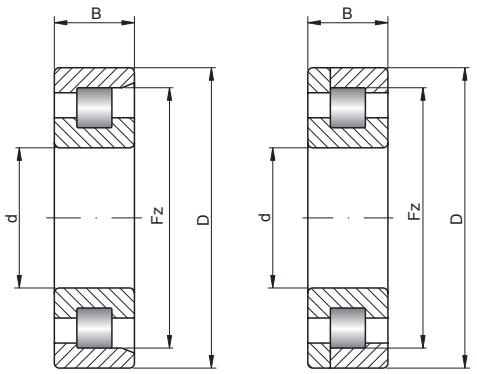

Limiting speed [rpm]		Basic makes*							Bearing No.
grease	oil	-	M	TV	C2	C3	C4	K	
4800	5800	●	◴	◝	◝	◴	◴	◝	**N215 E**
4800	5800	◝	◝	◝	◝	◝	◝	◝	**NF215 E**
4800	5800	◝	◝	◝	◝	◝	◝	◝	**NP215 E**
3800	5000	●	◴	◝	◝	◴	◴	◝	**N315 E**
3800	5000	◝	◝	◝	◝	◝	◝	◝	**NF315 E**
3800	5000	◝	◝	◝	◝	◝	◝	◝	**NP315 E**
3300	4400	◝	◝	◝	◝	◝	◝	◝	**N415**
3300	4400	◝	◝	◝	◝	◝	◝	◝	**NF415**
3300	4400	◝	◝	◝	◝	◝	◝	◝	**NP415**
4500	5400	●	◴	◝	◝	◴	◴	◝	**N216 E**
4500	5400	◝	◝	◝	◝	◝	◝	◝	**NF216 E**
4500	5400	◝	◝	◝	◝	◝	◝	◝	**NP216 E**
3500	4700	●	◴	◝	◝	◴	◴	◝	**N316 E**
3500	4700	◝	◝	◝	◝	◝	◝	◝	**NF316 E**
3500	4700	◝	◝	◝	◝	◝	◝	◝	**NP316 E**
3100	4200	◝	◝	◝	◝	◝	◝	◝	**N416**
3100	4200	◝	◝	◝	◝	◝	◝	◝	**NF416**
3100	4200	◝	◝	◝	◝	◝	◝	◝	**NP416**
4200	5000	●	◴	◝	◝	◴	◴	◝	**N217 E**
4200	5000	◝	◝	◝	◝	◝	◝	◝	**NF217 E**
4200	5000	◝	◝	◝	◝	◝	◝	◝	**NP217 E**
3300	4500	●	◴	◝	◝	◴	◴	◝	**N317 E**
3300	4500	◝	◝	◝	◝	◝	◝	◝	**NF317 E**
3300	4500	◝	◝	◝	◝	◝	◝	◝	**NP317 E**
3000	4000	◝	◝	◝	◝	◝	◝	◝	**N417**
3000	4000	◝	◝	◝	◝	◝	◝	◝	**NF417**
3000	4000	◝	◝	◝	◝	◝	◝	◝	**NP417**
3900	4700	●	◴	◝	◝	◴	◴	◝	**N218 E**
3900	4700	◝	◝	◝	◝	◝	◝	◝	**NF218 E**
3900	4700	◝	◝	◝	◝	◝	◝	◝	**NP218 E**
3100	4200	●	◴	◝	◝	◴	◴	◝	**N318 E**
3100	4200	◝	◝	◝	◝	◝	◝	◝	**NF318 E**
3100	4200	◝	◝	◝	◝	◝	◝	◝	**NP318 E**
2800	3700	◝	◝	◝	◝	◝	◝	◝	**N418**
2800	3700	◝	◝	◝	◝	◝	◝	◝	**NF418**
2800	3700	◝	◝	◝	◝	◝	◝	◝	**NP418**
3700	4400	●	◴	◝	◝	◴	◴	◝	**N219 E**
3700	4400	◝	◝	◝	◝	◝	◝	◝	**NF219 E**
3700	4400	◝	◝	◝	◝	◝	◝	◝	**NP219 E**
3000	4000	●	◴	◝	◝	◴	◴	◝	**N319 E**
3000	4000	◝	◝	◝	◝	◝	◝	◝	**NF319 E**
3000	4000	◝	◝	◝	◝	◝	◝	◝	**NP319 E**
2600	3400	◝	◝	◝	◝	◝	◝	◝	**N419**
2600	3400	◝	◝	◝	◝	◝	◝	◝	**NF419**
2600	3400	◝	◝	◝	◝	◝	◝	◝	**NP419**
5100	6000	◝	◝	◝	◝	◝	◝	◝	**N1920**
5100	6000	◝	◝	◝	◝	◝	◝	◝	**NF1920**
5100	6000	◝	◝	◝	◝	◝	◝	◝	**NP1920**
3500	4200	●	◴	◝	◝	◴	◴	◝	**N220 E**
3500	4200	◝	◝	◝	◝	◝	◝	◝	**NF220 E**
3500	4200	◝	◝	◝	◝	◝	◝	◝	**NP220 E**

* Other products also available

https://nppnovoteh.com

5. CYLINDRICAL ROLLER BEARINGS

5.6. Single-row cylindrical roller bearings - types - N, NF, NP



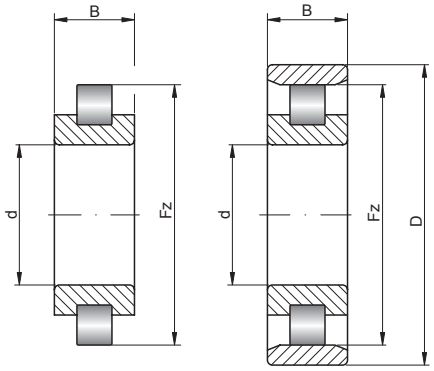

100 – 120 mm

Shaft [mm]	Bearing No.	Series		Dimensions [mm]				Weight [kg]	Basic load ratings [kN]	
		SD	SB	d	D	B	Fz		dyn. C	stat. C_0
100 cont.	**N2220 E**	2	2	100	180	46	163	4,82	334	444
	NF2220 E	2	2	100	180	46	163	5,2	334	444
	NP2220 E	2	2	100	180	46	163	5,42	334	444
	N3220	2	3	100	180	60,3	160	6,62	327	459
	NF3220	2	3	100	180	60,3	160	7,14	327	459
	NP3220	2	3	100	180	60,3	160	7,44	327	459
	N320 E	3	0	100	215	47	191,5	7,7	323	337
	NF320 E	3	0	100	215	47	191,5	8,3	323	337
	NP320 E	3	0	100	215	47	191,5	8,65	323	337
	N2320 E	3	2	100	215	73	191,5	12,1	570	717
	NF2320 E	3	2	100	215	73	191,5	13,06	570	717
	NP2320 E	3	2	100	215	73	191,5	13,6	570	717
	N3320	3	3	100	215	82,6	185,5	15	530	706
	NF3320	3	3	100	215	82,6	185,5	16,18	530	706
	NP3320	3	3	100	215	82,6	185,5	16,85	530	706
	N420	4	0	100	250	58	211	14	458	498
	NF420	4	0	100	250	58	211	15,1	458	498
	NP420	4	0	100	250	58	211	15,73	458	498
105	**N1921**	9	0	105	145	20	135	0,951	71	102
	NF1921	9	0	105	145	20	135	1,03	71	102
	NP1921	9	0	105	145	20	135	1,07	71	102
	N221 E	2	0	105	190	36	171,5	4	201	241
	NF221 E	2	0	105	190	36	171,5	4,31	201	241
	NP221 E	2	0	105	190	36	171,5	4,49	201	241
	N3221	2	3	105	190	65,1	168,8	8	344	482
	NF3221	2	3	105	190	65,1	168,8	8,63	344	482
	NP3221	2	3	105	190	65,1	168,8	8,99	344	482
	N321 E	3	0	105	225	49	195	8,76	366	417
	NF321 E	3	0	105	225	49	195	9,46	366	417
	NP321 E	3	0	105	225	49	195	9,85	366	417
	N2321	3	2	105	225	77	195	15,6	568	750
	NF2321	3	2	105	225	77	195	16,83	568	750
	NP2321	3	2	105	225	77	195	17,53	568	750
	N421	4	0	105	260	60	220,5	19,1	471	510
	NF421	4	0	105	260	60	220,5	20,61	471	510
	NP421	4	0	105	260	60	220,5	21,47	471	510
110	**N222 E**	2	0	110	200	38	180,5	4,65	241	290
	NF222 E	2	0	110	200	38	180,5	5,01	241	290
	NP222 E	2	0	110	200	38	180,5	5,22	241	290
	N2222 E	2	2	110	200	53	180,5	6,93	384	517
	NF2222 E	2	2	110	200	53	180,5	7,48	384	517
	NP2222 E	2	2	110	200	53	180,5	7,79	384	517
	N3222	2	3	110	200	69,8	178,5	9,55	427	607
	NF3222	2	3	110	200	69,8	178,5	10,3	427	607
	NP3222	2	3	110	200	69,8	178,5	10,73	427	607
	N322 E	3	0	110	240	50	211	10,4	411	467
	NF322 E	3	0	110	240	50	211	11,22	411	467
	NP322 E	3	0	110	240	50	211	11,69	411	467
	N422	4	0	110	280	65	235	19,9	550	621
	NF422	4	0	110	280	65	235	21,47	550	621
	NP422	4	0	110	280	65	235	22,36	550	621
120	**N2322 E**	3	2	120	165	80	211	18,8	680	880
	NF2322 E	3	2	120	165	80	211	20,28	680	880

- warehouse - order - phone

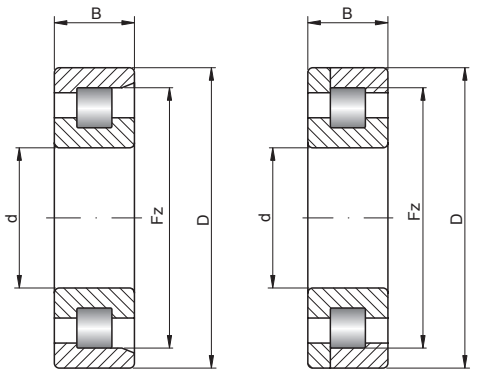

Limiting speed [rpm]		Basic makes*							Bearing No.
grease	oil	-	M	TV	C2	C3	C4	K	
3100	4200								**N2220 E**
3100	4200								**NF2220 E**
3100	4200								**NP2220 E**
2800	4200								**N3220**
2800	4200								**NF3220**
2800	4200								**NP3220**
2800	3700								**N320 E**
2800	3700								**NF320 E**
2800	3700								**NP320 E**
2400	3600								**N2320 E**
2400	3600								**NF2320 E**
2400	3600								**NP2320 E**
2500	3700								**N3320**
2500	3700								**NF3320**
2500	3700								**NP3320**
2500	3300								**N420**
2500	3300								**NF420**
2500	3300								**NP420**
4700	5600								**N1921**
4700	5600								**NF1921**
4700	5600								**NP1921**
3300	3900								**N221 E**
3300	3900								**NF221 E**
3300	3900								**NP221 E**
2600	3900								**N3221**
2600	3900								**NF3221**
2600	3900								**NP3221**
2600	3500								**N321 E**
2600	3500								**NF321 E**
2600	3500								**NP321 E**
2200	3200								**N2321**
2200	3200								**NF2321**
2200	3200								**NP2321**
2400	3100								**N421**
2400	3100								**NF421**
2400	3100								**NP421**
3100	3700								**N222 E**
3100	3700								**NF222 E**
3100	3700								**NP222 E**
2800	3700								**N2222 E**
2800	3700								**NF2222 E**
2800	3700								**NP2222 E**
2500	3700								**N3222**
2500	3700								**NF3222**
2500	3700								**NP3222**
2500	3300								**N322 E**
2500	3300								**NF322 E**
2500	3300								**NP322 E**
2200	2900								**N422**
2200	2900								**NF422**
2200	2900								**NP422**
2000	3000								**N2322 E**
2000	3000								**NF2322 E**

* Other products also available

https://nppnovoteh.com

5. CYLINDRICAL ROLLER BEARINGS

5.6. Single-row cylindrical roller bearings - types - N, NF, NP



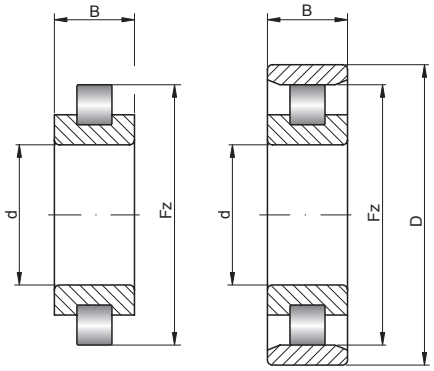

120 – 140 mm

Shaft [mm]	Bearing No.	Series		Dimensions [mm]				Weight [kg]	Basic load ratings [kN]	
		SD	SB	d	D	B	Fz		dyn. C	stat. C_0
120 cont.	**NP2322 E**	3	2	120	165	80	211	21,13	680	880
	N2924	9	2	120	180	27	153,5	1,72	116	188
	NF2924	9	2	120	180	27	153,5	1,86	116	188
	NP2924	9	2	120	180	27	153,5	1,94	116	188
	N224 E	2	0	120	215	40	195,5	5,65	260	318
	NF224 E	2	0	120	215	40	195,5	6,09	260	318
	NP224 E	2	0	120	215	40	195,5	6,34	260	318
	N2224 E	2	2	120	215	58	195,5	8,56	452	619
	NF2224 E	2	2	120	215	58	195,5	9,24	452	619
	NP2224 E	2	2	120	215	58	195,5	9,62	452	619
	N3224	2	3	120	215	76	191,5	11,9	477	695
	NF3224	2	3	120	215	76	191,5	12,84	477	695
	NP3224	2	3	120	215	76	191,5	13,37	477	695
	N324 E	3	0	120	260	55	230	13,1	485	551
	NF324 E	3	0	120	260	55	230	14,13	485	551
	NP324 E	3	0	120	260	55	230	14,72	485	551
	N2324 E	3	2	120	260	86	230	23,1	793	1030
	NF2324 E	3	2	120	260	86	230	24,92	793	1030
	NP2324 E	3	2	120	260	86	230	25,96	793	1030
	N424	4	0	120	310	72	260	28	690	770
	NF424	4	0	120	310	72	260	30,16	690	770
	NP424	4	0	120	310	72	260	31,42	690	770
130	**N1926**	9	0	130	180	24	168	1,79	112	163
	NF1926	9	0	130	180	24	168	2	112	163
	NP1926	9	0	130	180	24	168	2,06	112	163
	N2926	9	2	130	180	30	168	2,27	152	243
	NF2926	9	2	130	180	30	168	2,5	152	243
	NP2926	9	2	130	180	30	168	2,6	152	243
	N226 E	2	0	130	230	40	209,5	6,49	282	362
	NF226 E	2	0	130	230	40	209,5	7	282	362
	NP226 E	2	0	130	230	40	209,5	7,3	282	362
	N2226 E	2	2	130	230	64	209,5	11,2	530	737
	NF2226 E	2	2	130	230	64	209,5	12,1	530	737
	NP2226 E	2	2	130	230	64	209,5	12,6	530	737
	N3226	2	3	130	230	80	204	14,1	550	857
	NF3226	2	3	130	230	80	204	15,3	550	857
	NP3226	2	3	130	230	80	204	15,9	550	857
	N326 E	3	0	130	280	58	247	16,4	564	667
	NF326 E	3	0	130	280	58	247	17,7	564	667
	NP326 E	3	0	130	280	58	247	18,4	564	667
	N2326 E	3	2	130	280	93	247	29,1	920	1230
	NF2326 E	3	2	130	280	93	247	31,4	920	1230
	NP2326 E	3	2	130	280	93	247	32,7	920	1230
	N3326	3	3	130	280	112	243	34,6	936	1290
	NF3326	3	3	130	280	112	243	37,2	936	1290
	NP3326	3	3	130	280	112	243	38,8	936	1290
	N426	4	0	130	340	78	285	36,1	771	876
	NF426	4	0	130	340	78	285	39	771	876
	NP426	4	0	130	340	78	285	40,6	771	876
140	**N1928**	9	0	140	190	24	187	1,9	117	177
	NF1928	9	0	140	190	24	187	2,1	117	177
	NP1928	9	0	140	190	24	187	2,2	117	177
	N2928	9	2	140	190	30	187	2,49	165	275
	NF2928	9	2	140	190	30	187	2,7	165	275

- warehouse - order - phone

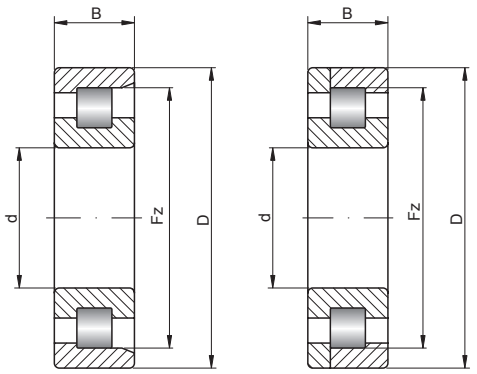

Limiting speed [rpm]		Basic makes*							Bearing No.
grease	oil	-	M	TV	C2	C3	C4	K	
2000	3000	●	●	●	●	●	●	●	**NP2322 E**
3700	4600	●	●	●	●	●	●	●	**N2924**
3700	4600	●	●	●	●	●	●	●	**NF2924**
3700	4600	●	●	●	●	●	●	●	**NP2924**
2900	3400	◴	◴	●	●	◴	◴	●	**N224 E**
2900	3400	●	●	●	●	●	●	●	**NF224 E**
2900	3400	●	●	●	●	●	●	●	**NP224 E**
2600	3400	●	●	●	●	●	●	●	**N2224 E**
2600	3400	●	●	●	●	●	●	●	**NF2224 E**
2600	3400	●	●	●	●	●	●	●	**NP2224 E**
2300	3400	●	●	●	●	●	●	●	**N3224**
2300	3400	●	●	●	●	●	●	●	**NF3224**
2300	3400	●	●	●	●	●	●	●	**NP3224**
2200	3000	◴	◴	●	●	◴	◴	●	**N324 E**
2200	3000	●	●	●	●	●	●	●	**NF324 E**
2200	3000	●	●	●	●	●	●	●	**NP324 E**
1800	2700	●	●	●	●	●	●	●	**N2324 E**
1800	2700	●	●	●	●	●	●	●	**NF2324 E**
1800	2700	●	●	●	●	●	●	●	**NP2324 E**
1900	2600	●	●	●	●	●	●	●	**N424**
1900	2600	●	●	●	●	●	●	●	**NF424**
1900	2600	●	●	●	●	●	●	●	**NP424**
3800	4500	●	●	●	●	●	●	●	**N1926**
3800	4500	●	●	●	●	●	●	●	**NF1926**
3800	4500	●	●	●	●	●	●	●	**NP1926**
3500	4500	●	●	●	●	●	●	●	**N2926**
3500	4500	●	●	●	●	●	●	●	**NF2926**
3500	4500	●	●	●	●	●	●	●	**NP2926**
2700	3200	◴	◴	●	●	◴	◴	●	**N226 E**
2700	3200	●	●	●	●	●	●	●	**NF226 E**
2700	3200	●	●	●	●	●	●	●	**NP226 E**
2400	3200	●	●	●	●	●	●	●	**N2226 E**
2400	3200	●	●	●	●	●	●	●	**NF2226 E**
2400	3200	●	●	●	●	●	●	●	**NP2226 E**
2100	3200	●	●	●	●	●	●	●	**N3226**
2100	3200	●	●	●	●	●	●	●	**NF3226**
2100	3200	●	●	●	●	●	●	●	**NP3226**
2100	2700	◴	◴	●	●	◴	◴	●	**N326 E**
2100	2700	●	●	●	●	●	●	●	**NF326 E**
2100	2700	●	●	●	●	●	●	●	**NP326 E**
1700	2500	●	●	●	●	●	●	●	**N2326 E**
1700	2500	●	●	●	●	●	●	●	**NF2326 E**
1700	2500	●	●	●	●	●	●	●	**NP2326 E**
1800	2700	●	●	●	●	●	●	●	**N3326**
1800	2700	●	●	●	●	●	●	●	**NF3326**
1800	2700	●	●	●	●	●	●	●	**NP3326**
1800	2300	●	●	●	●	●	●	●	**N426**
1800	2300	●	●	●	●	●	●	●	**NF426**
1800	2300	●	●	●	●	●	●	●	**NP426**
3500	4200	●	●	●	●	●	●	●	**N1928**
3500	4200	●	●	●	●	●	●	●	**NF1928**
3500	4200	●	●	●	●	●	●	●	**NP1928**
3250	4400	●	●	●	●	●	●	●	**N2928**
3250	4400	●	●	●	●	●	●	●	**NF2928**

* Other products also available

https://nppnovoteh.com

5. CYLINDRICAL ROLLER BEARINGS

5.6. Single-row cylindrical roller bearings - types - N, NF, NP



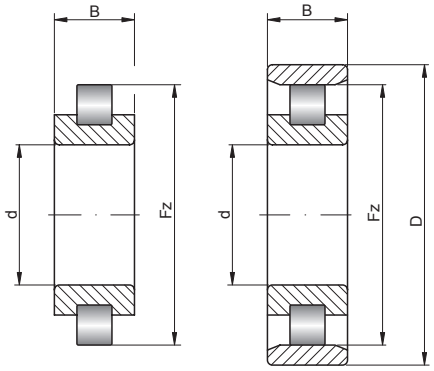

140 – 160 mm

Shaft [mm]	Bearing No.	Series		Dimensions [mm]				Weight [kg]	Basic load ratings [kN]	
		SD	SB	d	D	B	Fz		dyn. C	stat. C_0
140 cont.	**NP2928**	9	2	140	190	30	187	2,8	165	275
	N228 E	2	0	140	250	42	225	8,27	324	421
	NF228 E	2	0	140	250	42	225	8,9	324	421
	NP228 E	2	0	140	250	42	225	9,3	324	421
	N2228 E	2	2	140	250	68	225	14,3	572	835
	NF2228 E	2	2	140	250	68	225	15,5	572	835
	NP2228 E	2	2	140	250	68	225	16,1	572	835
	N3228	2	3	140	250	88	221	18,5	604	939
	NF3228	2	3	140	250	88	221	20	604	939
	NP3228	2	3	140	250	88	221	20,8	604	939
	N328 E	3	0	140	300	62	264	20,1	623	746
	NF328 E	3	0	140	300	62	264	21,7	623	746
	NP328 E	3	0	140	300	62	264	22,6	623	746
	N2328 E	3	2	140	300	102	264	36,8	1020	1380
	NF2328 E	3	2	140	300	102	264	39,6	1020	1380
	NP2328 E	3	2	140	300	102	264	41,3	1020	1380
	N428	4	0	140	360	82	302	46,8	874	1020
	NF428	4	0	140	360	82	302	50,5	874	1020
	NP428	4	0	140	360	82	302	52,6	874	1020
150	**N3030**	0	3	150	225	56	207	8,03	374	652
	NF3030	0	3	150	225	56	207	8,7	374	652
	NP3030	0	3	150	225	56	207	9,1	374	652
	N230 E	2	0	150	270	45	242	10,3	374	492
	NF230 E	2	0	150	270	45	242	11	374	492
	NP230 E	2	0	150	270	45	242	11,5	374	492
	N2230 E	2	2	150	270	73	242	18,7	662	982
	NF2230 E	2	2	150	270	73	242	20,2	662	982
	NP2230 E	2	2	150	270	73	242	21	662	982
	N330 E	3	0	150	320	65	283	26,4	663	807
	NF330 E	3	0	150	320	65	283	28,5	663	807
	NP330 E	3	0	150	320	65	283	29,7	663	807
	N2330 E	3	2	150	320	108	283	44,7	1180	1600
	NF2330 E	3	2	150	320	108	283	48,3	1180	1600
	NP2330 E	3	2	150	320	108	283	50,3	1180	1600
	N3330	3	3	150	320	128	277	51,4	1180	1700
	NF3330	3	3	150	320	128	277	55,5	1180	1700
	NP3330	3	3	150	320	128	277	57,8	1180	1700
	N430	4	0	150	380	85	317	53,3	930	1120
	NF430	4	0	150	380	85	317	57,4	930	1120
	NP430	4	0	150	380	85	317	59,8	930	1120
160	**N1932**	9	0	160	220	28	205	3,08	149	228
	NF1932	9	0	160	220	28	205	3,4	149	228
	NP1932	9	0	160	220	28	205	3,5	149	228
	N2932	9	2	160	220	36	205	4,05	199	330
	NF2932	9	2	160	220	36	205	4,3	199	330
	NP2932	9	2	160	220	36	205	4,5	199	330
	N3132	1	3	160	270	86	243	20,6	681	1070
	NF3132	1	3	160	270	86	243	22,3	681	1070
	NP3132	1	3	160	270	86	243	23,2	681	1070
	N232 E	2	0	160	290	48	259	14,4	427	568
	NF232 E	2	0	160	290	48	259	15,6	427	568
	NP232 E	2	0	160	290	48	259	16,2	427	568
	N2232 E	2	2	160	290	80	261	23,6	809	1190
	NF2232 E	2	2	160	290	80	261	25,4	809	1190

- warehouse - order - phone

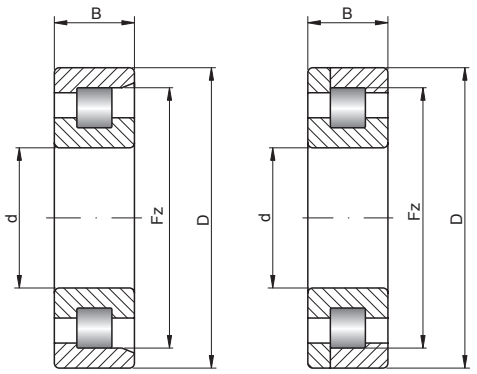

Limiting speed [rpm]		Basic makes*							Bearing No.
grease	oil	-	M	TV	C2	C3	C4	K	
3250	4400	✓	✓	✓	✓	✓	✓	✓	**NP2928**
2400	2900	◴	◴	✓	✓	◴	◴	✓	**N228 E**
2400	2900	✓	✓	✓	✓	✓	✓	✓	**NF228 E**
2400	2900	✓	✓	✓	✓	✓	✓	✓	**NP228 E**
2200	2900	✓	✓	✓	✓	✓	✓	✓	**N2228 E**
2200	2900	✓	✓	✓	✓	✓	✓	✓	**NF2228 E**
2200	2900	✓	✓	✓	✓	✓	✓	✓	**NP2228 E**
1900	2900	✓	✓	✓	✓	✓	✓	✓	**N3228**
1900	2900	✓	✓	✓	✓	✓	✓	✓	**NF3228**
1900	2900	✓	✓	✓	✓	✓	✓	✓	**NP3228**
1900	2500	✓	✓	✓	✓	✓	✓	✓	**N328 E**
1900	2500	✓	✓	✓	✓	✓	✓	✓	**NF328 E**
1900	2500	✓	✓	✓	✓	✓	✓	✓	**NP328 E**
1500	2300	✓	✓	✓	✓	✓	✓	✓	**N2328 E**
1500	2300	✓	✓	✓	✓	✓	✓	✓	**NF2328 E**
1500	2300	✓	✓	✓	✓	✓	✓	✓	**NP2328 E**
1600	2200	✓	✓	✓	✓	✓	✓	✓	**N428**
1600	2200	✓	✓	✓	✓	✓	✓	✓	**NF428**
1600	2200	✓	✓	✓	✓	✓	✓	✓	**NP428**
3000	4300	✓	✓	✓	✓	✓	✓	✓	**N3030**
3000	4300	✓	✓	✓	✓	✓	✓	✓	**NF3030**
3000	4300	✓	✓	✓	✓	✓	✓	✓	**NP3030**
2200	2700	◴	◴	✓	✓	◴	◴	✓	**N230 E**
2200	2700	✓	✓	✓	✓	✓	✓	✓	**NF230 E**
2200	2700	✓	✓	✓	✓	✓	✓	✓	**NP230 E**
2000	2600	✓	✓	✓	✓	✓	✓	✓	**N2230 E**
2000	2600	✓	✓	✓	✓	✓	✓	✓	**NF2230 E**
2000	2600	✓	✓	✓	✓	✓	✓	✓	**NP2230 E**
1800	2300	✓	✓	✓	✓	✓	✓	✓	**N330 E**
1800	2300	✓	✓	✓	✓	✓	✓	✓	**NF330 E**
1800	2300	✓	✓	✓	✓	✓	✓	✓	**NP330 E**
1400	2100	✓	✓	✓	✓	✓	✓	✓	**N2330 E**
1400	2100	✓	✓	✓	✓	✓	✓	✓	**NF2330 E**
1400	2100	✓	✓	✓	✓	✓	✓	✓	**NP2330 E**
1600	2300	✓	✓	✓	✓	✓	✓	✓	**N3330**
1600	2300	✓	✓	✓	✓	✓	✓	✓	**NF3330**
1600	2300	✓	✓	✓	✓	✓	✓	✓	**NP3330**
1500	2000	✓	✓	✓	✓	✓	✓	✓	**N430**
1500	2000	✓	✓	✓	✓	✓	✓	✓	**NF430**
1500	2000	✓	✓	✓	✓	✓	✓	✓	**NP430**
3200	3800	✓	✓	✓	✓	✓	✓	✓	**N1932**
3200	3800	✓	✓	✓	✓	✓	✓	✓	**NF1932**
3200	3800	✓	✓	✓	✓	✓	✓	✓	**NP1932**
3000	4300	✓	✓	✓	✓	✓	✓	✓	**N2932**
3000	4300	✓	✓	✓	✓	✓	✓	✓	**NF2932**
3000	4300	✓	✓	✓	✓	✓	✓	✓	**NP2932**
2500	4000	✓	✓	✓	✓	✓	✓	✓	**N3132**
2500	4000	✓	✓	✓	✓	✓	✓	✓	**NF3132**
2500	4000	✓	✓	✓	✓	✓	✓	✓	**NP3132**
2100	2500	✓	✓	✓	✓	✓	✓	✓	**N232 E**
2100	2500	✓	✓	✓	✓	✓	✓	✓	**NF232 E**
2100	2500	✓	✓	✓	✓	✓	✓	✓	**NP232 E**
1800	2400	✓	✓	✓	✓	✓	✓	✓	**N2232 E**
1800	2400	✓	✓	✓	✓	✓	✓	✓	**NF2232 E**

* Other products also available

https://nppnovoteh.com

5. CYLINDRICAL ROLLER BEARINGS

5.6. Single-row cylindrical roller bearings - types - N, NF, NP



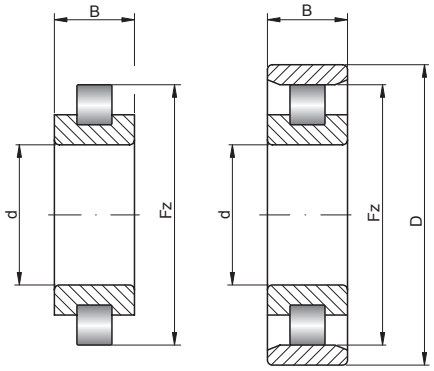

160 – 190 mm

Shaft [mm]	Bearing No.	Series		Dimensions [mm]				Weight [kg]	Basic load ratings [kN]	
		SD	SB	d	D	B	Fz		dyn. C	stat. C_0
160 cont.	**NP2232 E**	2	2	160	290	80	261	26,5	809	1190
	N332 E	3	0	160	340	68	300	31,7	698	876
	NF332 E	3	0	160	340	68	300	34,2	698	876
	NP332 E	3	0	160	340	68	300	35,6	698	876
	N2332 E	3	2	160	340	114	300	53,1	1310	1820
	NF2332 E	3	2	160	340	114	300	57,2	1310	1820
	NP2332 E	3	2	160	340	114	300	59,6	1310	1820
	N3332	3	3	160	340	136	292	61,5	1270	1890
	NF3332	3	3	160	340	136	292	66,3	1270	1890
	NP3332	3	3	160	340	136	292	69,1	1270	1890
170	**N3034**	0	3	170	260	67	236	13	461	824
	NF3034	0	3	170	260	67	236	14	461	824
	NP3034	0	3	170	260	67	236	14,6	461	824
	N234 E	2	0	170	310	52	279	18,4	475	637
	NF234 E	2	0	170	310	52	279	19,9	475	637
	NP234 E	2	0	170	310	52	279	20,7	475	637
	N2234 E	2	2	170	310	86	281	29,2	967	1410
	NF2234 E	2	2	170	310	86	281	31,6	967	1410
	NP2234 E	2	2	170	310	86	281	32,9	967	1410
	N334 E	3	0	170	360	72	318	38,6	809	1010
	NF334 E	3	0	170	360	72	318	41,7	809	1010
	NP334 E	3	0	170	360	72	318	43,4	809	1010
	N2334	3	2	170	360	120	310	62,6	1220	1750
	NF2334	3	2	170	360	120	310	67,5	1220	1750
	NP2334	3	2	170	360	120	310	70,3	1220	1750
180	**N3036**	0	3	180	280	74	255	17,3	600	1040
	NF3036	0	3	180	280	74	255	18,7	600	1040
	NP3036	0	3	180	280	74	255	19,5	600	1040
	N236 E	2	0	180	320	52	289	19,3	492	677
	NF236 E	2	0	180	320	52	289	20,8	492	677
	NP236 E	2	0	180	320	52	289	21,7	492	677
	N2236 E	2	2	180	320	86	291	30,4	1010	1510
	NF2236 E	2	2	180	320	86	291	32,8	1010	1510
	NP2236 E	2	2	180	320	86	291	34,2	1010	1510
	N3236	2	3	180	320	112	282	38,4	999	1680
	NF3236	2	3	180	320	112	282	41,5	999	1680
	NP3236	2	3	180	320	112	282	43,2	999	1680
	N336 E	3	0	180	380	75	335	42,6	917	1150
	NF336 E	3	0	180	380	75	335	46	917	1150
	NP336 E	3	0	180	380	75	335	47,9	917	1150
	N2336	3	2	180	380	126	328	73	1350	1940
	NF2336	3	2	180	380	126	328	78,7	1350	1940
	NP2336	3	2	180	380	126	328	82	1350	1940
	N3336	3	3	180	380	150	328	84,4	1660	2520
	NF3336	3	3	180	380	150	328	91,1	1660	2520
	NP3336	3	3	180	380	150	328	94,9	1660	2520
190	**N3038**	0	3	190	290	75	265	18,4	636	1140
	NF3038	0	3	190	290	75	265	19,9	636	1140
	NP3038	0	3	190	290	75	265	20,7	636	1140
	N3138	1	3	190	320	104	287	34,5	942	1570
	NF3138	1	3	190	320	104	287	37,2	942	1570
	NP3138	1	3	190	320	104	287	38,7	942	1570
	N238 E	2	0	190	340	55	306	23,2	554	768

- warehouse - order - phone

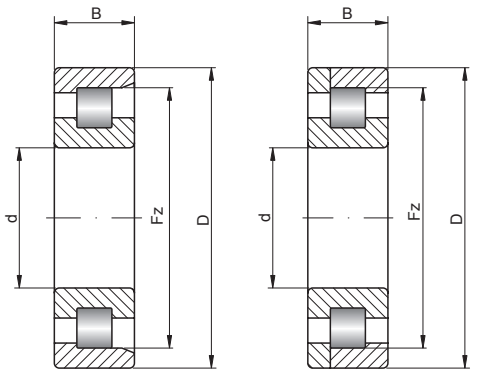

Limiting speed [rpm]		Basic makes*							Bearing No.
grease	oil	-	M	TV	C2	C3	C4	K	
1800	2400	✓	✓	✓	✓	✓	✓	✓	**NP2232 E**
1600	2200	✓	✓	✓	✓	✓	✓	✓	**N332 E**
1600	2200	✓	✓	✓	✓	✓	✓	✓	**NF332 E**
1600	2200	✓	✓	✓	✓	✓	✓	✓	**NP332 E**
1300	2000	✓	✓	✓	✓	✓	✓	✓	**N2332 E**
1300	2000	✓	✓	✓	✓	✓	✓	✓	**NF2332 E**
1300	2000	✓	✓	✓	✓	✓	✓	✓	**NP2332 E**
1400	2200	✓	✓	✓	✓	✓	✓	✓	**N3332**
1400	2200	✓	✓	✓	✓	✓	✓	✓	**NF3332**
1400	2200	✓	✓	✓	✓	✓	✓	✓	**NP3332**
2700	4000	✓	✓	✓	✓	✓	✓	✓	**N3034**
2700	4000	✓	✓	✓	✓	✓	✓	✓	**NF3034**
2700	4000	✓	✓	✓	✓	✓	✓	✓	**NP3034**
1900	2300	✓	✓	✓	✓	✓	✓	✓	**N234 E**
1900	2300	✓	✓	✓	✓	✓	✓	✓	**NF234 E**
1900	2300	✓	✓	✓	✓	✓	✓	✓	**NP234 E**
1700	2200	✓	✓	✓	✓	✓	✓	✓	**N2234 E**
1700	2200	✓	✓	✓	✓	✓	✓	✓	**NF2234 E**
1700	2200	✓	✓	✓	✓	✓	✓	✓	**NP2234 E**
1500	2000	✓	✓	✓	✓	✓	✓	✓	**N334 E**
1500	2000	✓	✓	✓	✓	✓	✓	✓	**NF334 E**
1500	2000	✓	✓	✓	✓	✓	✓	✓	**NP334 E**
1300	1900	✓	✓	✓	✓	✓	✓	✓	**N2334**
1300	1900	✓	✓	✓	✓	✓	✓	✓	**NF2334**
1300	1900	✓	✓	✓	✓	✓	✓	✓	**NP2334**
2500	3800	✓	✓	✓	✓	✓	✓	✓	**N3036**
2500	3800	✓	✓	✓	✓	✓	✓	✓	**NF3036**
2500	3800	✓	✓	✓	✓	✓	✓	✓	**NP3036**
1800	2200	✓	✓	✓	✓	✓	✓	✓	**N236 E**
1800	2200	✓	✓	✓	✓	✓	✓	✓	**NF236 E**
1800	2200	✓	✓	✓	✓	✓	✓	✓	**NP236 E**
1600	2100	✓	✓	✓	✓	✓	✓	✓	**N2236 E**
1600	2100	✓	✓	✓	✓	✓	✓	✓	**NF2236 E**
1600	2100	✓	✓	✓	✓	✓	✓	✓	**NP2236 E**
1400	2200	✓	✓	✓	✓	✓	✓	✓	**N3236**
1400	2200	✓	✓	✓	✓	✓	✓	✓	**NF3236**
1400	2200	✓	✓	✓	✓	✓	✓	✓	**NP3236**
1400	1900	✓	✓	✓	✓	✓	✓	✓	**N336 E**
1400	1900	✓	✓	✓	✓	✓	✓	✓	**NF336 E**
1400	1900	✓	✓	✓	✓	✓	✓	✓	**NP336 E**
1200	1800	✓	✓	✓	✓	✓	✓	✓	**N2336**
1200	1800	✓	✓	✓	✓	✓	✓	✓	**NF2336**
1200	1800	✓	✓	✓	✓	✓	✓	✓	**NP2336**
1300	1900	✓	✓	✓	✓	✓	✓	✓	**N3336**
1300	1900	✓	✓	✓	✓	✓	✓	✓	**NF3336**
1300	1900	✓	✓	✓	✓	✓	✓	✓	**NP3336**
2200	3600	✓	✓	✓	✓	✓	✓	✓	**N3038**
2200	3600	✓	✓	✓	✓	✓	✓	✓	**NF3038**
2200	3600	✓	✓	✓	✓	✓	✓	✓	**NP3038**
2000	3200	✓	✓	✓	✓	✓	✓	✓	**N3138**
2000	3200	✓	✓	✓	✓	✓	✓	✓	**NF3138**
2000	3200	✓	✓	✓	✓	✓	✓	✓	**NP3138**
1700	2000	✓	✓	✓	✓	✓	✓	✓	**N238 E**

* Other products also available

https://nppnovoteh.com

5. CYLINDRICAL ROLLER BEARINGS

5.6. Single-row cylindrical roller bearings - types - N, NF, NP



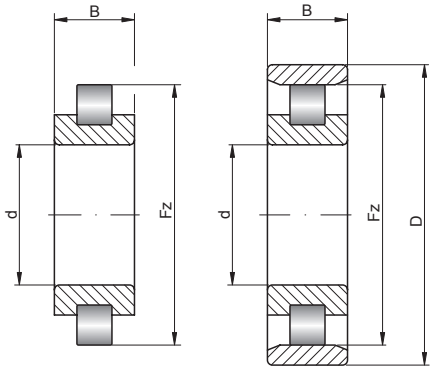

190 – 220 mm

Shaft [mm]	Bearing No.	Series		Dimensions [mm]				Weight [kg]	Basic load ratings [kN]	
		SD	SB	d	D	B	Fz		dyn. C	stat. C_0
190 cont.	**NF238 E**	2	0	190	340	55	306	25,1	554	768
	NP238 E	2	0	190	340	55	306	26,1	554	768
	N2238	2	2	190	340	92	299	37	828	1290
	NF2238	2	2	190	340	92	299	39,9	828	1290
	NP2238	2	2	190	340	92	299	41,6	828	1290
	N3238	2	3	190	340	120	299	46,8	1310	1930
	NF3238	2	3	190	340	120	299	50,5	1310	1930
	NP3238	2	3	190	340	120	299	52,6	1310	1930
	N338 E	3	0	190	400	78	353	49,9	987	1260
	NF338 E	3	0	190	400	78	353	53,8	987	1260
	NP338 E	3	0	190	400	78	353	56	987	1260
	N2338	3	2	190	400	132	345	84,7	1520	2220
	NF2338	3	2	190	400	132	345	91,4	1520	2220
	NP2338	3	2	190	400	132	345	95,2	1520	2220
	N3338	3	3	190	400	155	345	96,5	1870	2910
	NF3338	3	3	190	400	155	345	104,2	1870	2910
	NP3338	3	3	190	400	155	345	108,5	1870	2910
200	**N3040**	0	3	200	310	82	282	23,7	689	1250
	NF3040	0	3	200	310	82	282	25,6	689	1250
	NP3040	0	3	200	310	82	282	26,7	689	1250
	N240 E	2	0	200	360	58	323	26,8	618	865
	NF240 E	2	0	200	360	58	323	28,9	618	865
	NP240 E	2	0	200	360	58	323	30,1	618	865
	N2240	2	2	200	360	98	316	44,4	946	1490
	NF2240	2	2	200	360	98	316	47,9	946	1490
	NP2240	2	2	200	360	98	316	49,9	946	1490
	N3240	2	3	200	360	128	316	56,2	1200	2020
	NF3240	2	3	200	360	128	316	60,6	1200	2020
	NP3240	2	3	200	360	128	316	63,1	1200	2020
	N340 E	3	0	200	420	80	370	56,2	987	1270
	NF340 E	3	0	200	420	80	370	60,6	987	1270
	NP340 E	3	0	200	420	80	370	63,1	987	1270
	N2340	3	2	200	420	138	360	97,4	1520	2240
	NF2340	3	2	200	420	138	360	105	1520	2240
	NP2340	3	2	200	420	138	360	109,5	1520	2240
220	**N2944**	9	2	220	300	48	281,5	9,82	366	655
	NF2944	9	2	220	300	48	281,5	11	366	655
	NP2944	9	2	220	300	48	281,5	11	366	655
	N3144	1	3	220	370	120	333	53,2	1230	2140
	NF3144	1	3	220	370	120	333	57	1230	2140
	NP3144	1	3	220	370	120	333	59,7	1230	2140
	N244 E	2	0	220	400	65	358	38,5	766	1080
	NF244 E	2	0	220	400	65	358	42	766	1080
	NP244 E	2	0	220	400	65	358	43,3	766	1080
	N2244	2	2	220	400	108	355	60,9	1130	1810
	NF2244	2	2	220	400	108	355	66	1130	1810
	NP2244	2	2	220	400	108	355	68,4	1130	1810
	N3244	2	3	220	400	144	350	78,8	1630	2880
	NF3244	2	3	220	400	144	350	85	1630	2880
	NP3244	2	3	220	400	144	350	88,6	1630	2880
	N3340	3	3	220	420	165	360	113	1870	2930
	NF3340	3	3	220	420	165	360	122	1870	2930
	NP3340	3	3	220	420	165	360	127	1870	2930
	N344 E	3	0	220	460	88	406	74,4	1200	1570

- warehouse - order - phone

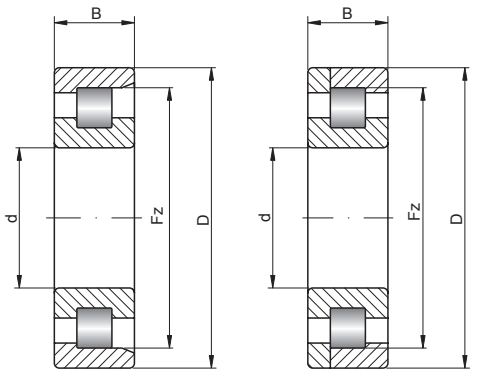

Limiting speed [rpm]		Basic makes*							Bearing No.
grease	oil	-	M	TV	C2	C3	C4	K	
1700	2000	✓	✓	✓	✓	✓	✓	✓	**NF238 E**
1700	2000	✓	✓	✓	✓	✓	✓	✓	**NP238 E**
1500	2000	✓	✓	✓	✓	✓	✓	✓	**N2238**
1500	2000	✓	✓	✓	✓	✓	✓	✓	**NF2238**
1500	2000	✓	✓	✓	✓	✓	✓	✓	**NP2238**
1300	2000	✓	✓	✓	✓	✓	✓	✓	**N3238**
1300	2000	✓	✓	✓	✓	✓	✓	✓	**NF3238**
1300	2000	✓	✓	✓	✓	✓	✓	✓	**NP3238**
1300	1800	✓	✓	✓	✓	✓	✓	✓	**N338 E**
1300	1800	✓	✓	✓	✓	✓	✓	✓	**NF338 E**
1300	1800	✓	✓	✓	✓	✓	✓	✓	**NP338 E**
1100	1700	✓	✓	✓	✓	✓	✓	✓	**N2338**
1100	1700	✓	✓	✓	✓	✓	✓	✓	**NF2338**
1100	1700	✓	✓	✓	✓	✓	✓	✓	**NP2338**
1200	1800	✓	✓	✓	✓	✓	✓	✓	**N3338**
1200	1800	✓	✓	✓	✓	✓	✓	✓	**NF3338**
1200	1800	✓	✓	✓	✓	✓	✓	✓	**NP3338**
2000	3400	✓	✓	✓	✓	✓	✓	✓	**N3040**
2000	3400	✓	✓	✓	✓	✓	✓	✓	**NF3040**
2000	3400	✓	✓	✓	✓	✓	✓	✓	**NP3040**
1600	1900	✓	✓	✓	✓	✓	✓	✓	**N240 E**
1600	1900	✓	✓	✓	✓	✓	✓	✓	**NF240 E**
1600	1900	✓	✓	✓	✓	✓	✓	✓	**NP240 E**
1400	1900	✓	✓	✓	✓	✓	✓	✓	**N2240**
1400	1900	✓	✓	✓	✓	✓	✓	✓	**NF2240**
1400	1900	✓	✓	✓	✓	✓	✓	✓	**NP2240**
1300	1900	✓	✓	✓	✓	✓	✓	✓	**N3240**
1300	1900	✓	✓	✓	✓	✓	✓	✓	**NF3240**
1300	1900	✓	✓	✓	✓	✓	✓	✓	**NP3240**
1200	1700	✓	✓	✓	✓	✓	✓	✓	**N340 E**
1200	1700	✓	✓	✓	✓	✓	✓	✓	**NF340 E**
1200	1700	✓	✓	✓	✓	✓	✓	✓	**NP340 E**
1000	1500	✓	✓	✓	✓	✓	✓	✓	**N2340**
1000	1500	✓	✓	✓	✓	✓	✓	✓	**NF2340**
1000	1500	✓	✓	✓	✓	✓	✓	✓	**NP2340**
2000	3000	✓	✓	✓	✓	✓	✓	✓	**N2944**
2000	3000	✓	✓	✓	✓	✓	✓	✓	**NF2944**
2000	3000	✓	✓	✓	✓	✓	✓	✓	**NP2944**
1700	2700	✓	✓	✓	✓	✓	✓	✓	**N3144**
1700	2700	✓	✓	✓	✓	✓	✓	✓	**NF3144**
1700	2700	✓	✓	✓	✓	✓	✓	✓	**NP3144**
1400	1700	✓	✓	✓	✓	✓	✓	✓	**N244 E**
1400	1700	✓	✓	✓	✓	✓	✓	✓	**NF244 E**
1400	1700	✓	✓	✓	✓	✓	✓	✓	**NP244 E**
1200	1700	✓	✓	✓	✓	✓	✓	✓	**N2244**
1200	1700	✓	✓	✓	✓	✓	✓	✓	**NF2244**
1200	1700	✓	✓	✓	✓	✓	✓	✓	**NP2244**
1100	1700	✓	✓	✓	✓	✓	✓	✓	**N3244**
1100	1700	✓	✓	✓	✓	✓	✓	✓	**NF3244**
1100	1700	✓	✓	✓	✓	✓	✓	✓	**NP3244**
1100	1700	✓	✓	✓	✓	✓	✓	✓	**N3340**
1100	1700	✓	✓	✓	✓	✓	✓	✓	**NF3340**
1100	1700	✓	✓	✓	✓	✓	✓	✓	**NP3340**
1100	1500	✓	✓	✓	✓	✓	✓	✓	**N344 E**

* Other products also available

https://nppnovoteh.com

5. CYLINDRICAL ROLLER BEARINGS

5.6. Single-row cylindrical roller bearings - types - N, NF, NP



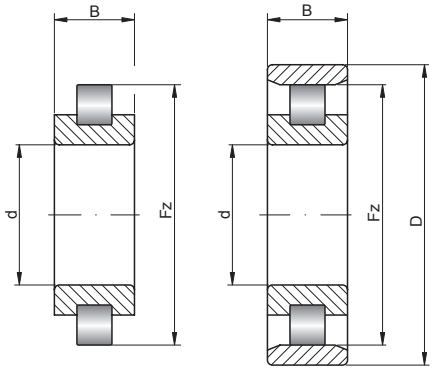

220 – 280 mm

Shaft [mm]	Bearing No.	Series		Dimensions [mm]				Weight [kg]	Basic load ratings [kN]	
		SD	SB	d	D	B	Fz		dyn. C	stat. C_0
220 cont.	**NF344 E**	3	0	220	460	88	406	80	1200	1570
	NP344 E	3	0	220	460	88	406	83,6	1200	1570
	N2344	3	2	220	460	145	396	119	1810	2690
	NF2344	3	2	220	460	145	396	128	1810	2690
	NP2344	3	2	220	460	145	396	133,7	1810	2690
	N3344	3	3	220	460	180	396	148	2130	3300
	NF3344	3	3	220	460	180	396	160	2130	3300
	NP3344	3	3	220	460	180	396	166,3	2130	3300
240	**N3048**	0	3	240	360	92	330	33	774	1450
	NF3048	0	3	240	360	92	330	36	774	1450
	NP3048	0	3	240	360	92	330	37,1	774	1450
	N248 E	2	0	240	440	72	393	52,1	949	1340
	NF248 E	2	0	240	440	72	393	56	949	1340
	NP248 E	2	0	240	440	72	393	58,5	949	1340
	N2248	2	2	240	440	120	385	82,5	1430	2320
	NF2248	2	2	240	440	120	385	89	1430	2320
	NP2248	2	2	240	440	120	385	92,7	1430	2320
	N3248	2	3	240	440	160	385	107	1950	3460
	NF3248	2	3	240	440	160	385	115	1950	3460
	NP3248	2	3	240	440	160	385	120,2	1950	3460
	N348 E	3	0	240	500	95	442	94,6	1430	1950
	NF348 E	3	0	240	500	95	442	102	1430	1950
	NP348 E	3	0	240	500	95	442	106,3	1430	1950
	N2348	3	2	240	500	155	430	152	2170	3320
	NF2348	3	2	240	500	155	430	164	2170	3320
	NP2348	3	2	240	500	155	430	170,8	2170	3320
260	**N1952**	9	0	260	360	46	335	13,9	410	686
	NF1952	9	0	260	360	46	335	15	410	686
	NP1952	9	0	260	360	46	335	15,7	410	686
	N2952	9	2	260	360	60	335	18,4	558	1020
	NF2952	9	2	260	360	60	335	20	558	1020
	NP2952	9	2	260	360	60	335	20,7	558	1020
	N3152	1	3	260	440	144	392	92,7	1730	3120
	NF3152	1	3	260	440	144	392	100	1730	3120
	NP3152	1	3	260	440	144	392	104,1	1730	3120
	N252 E	2	0	260	480	80	429	69	1100	1580
	NF252 E	2	0	260	480	80	429	74	1100	1580
	NP252 E	2	0	260	480	80	429	77	1100	1580
	N2252	2	2	260	480	130	420	107	1790	2950
	NF2252	2	2	260	480	130	420	116	1790	2950
	NP2252	2	2	260	480	130	420	121	1790	2950
	N3252	2	3	260	480	174	420	139	2140	3680
	NF3252	2	3	260	480	174	420	151	2140	3680
	NP3252	2	3	260	480	174	420	157	2140	3680
	N2352	3	2	260	540	165	464	185	2430	3750
	NF2352	3	2	260	540	165	464	200	2430	3750
	NP2352	3	2	260	540	165	464	208	2430	3750
	N3352	3	3	260	540	206	464	232	2940	4790
	NF3352	3	3	260	540	206	464	251	2940	4790
	NP3352	3	3	260	540	206	464	261	2940	4790
280	**N3856**	8	3	280	350	52	332	11,5	427	968
	NF3856	8	3	280	350	52	332	12	427	968
	NP3856	8	3	280	350	52	332	13	427	968

- warehouse - order - phone

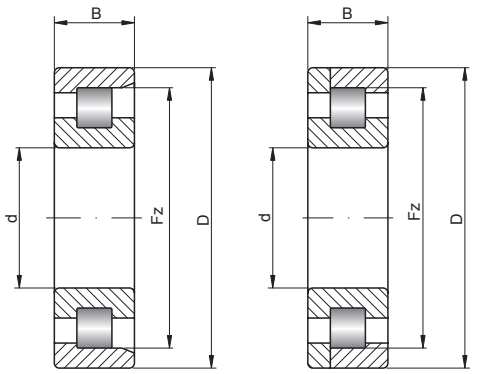

Limiting speed [rpm]		Basic makes*							Bearing No.
grease	oil	-	M	TV	C2	C3	C4	K	
1100	1500	✓	✓	✓	✓	✓	✓	✓	**NF344 E**
1100	1500	✓	✓	✓	✓	✓	✓	✓	**NP344 E**
900	1400	✓	✓	✓	✓	✓	✓	✓	**N2344**
900	1400	✓	✓	✓	✓	✓	✓	✓	**NF2344**
900	1400	✓	✓	✓	✓	✓	✓	✓	**NP2344**
990	1500	✓	✓	✓	✓	✓	✓	✓	**N3344**
990	1500	✓	✓	✓	✓	✓	✓	✓	**NF3344**
990	1500	✓	✓	✓	✓	✓	✓	✓	**NP3344**
1600	2600	✓	✓	✓	✓	✓	✓	✓	**N3048**
1600	2600	✓	✓	✓	✓	✓	✓	✓	**NF3048**
1600	2600	✓	✓	✓	✓	✓	✓	✓	**NP3048**
1200	1500	✓	✓	✓	✓	✓	✓	✓	**N248 E**
1200	1500	✓	✓	✓	✓	✓	✓	✓	**NF248 E**
1200	1500	✓	✓	✓	✓	✓	✓	✓	**NP248 E**
1100	1500	✓	✓	✓	✓	✓	✓	✓	**N2248**
1100	1500	✓	✓	✓	✓	✓	✓	✓	**NF2248**
1100	1500	✓	✓	✓	✓	✓	✓	✓	**NP2248**
990	1500	✓	✓	✓	✓	✓	✓	✓	**N3248**
990	1500	✓	✓	✓	✓	✓	✓	✓	**NF3248**
990	1500	✓	✓	✓	✓	✓	✓	✓	**NP3248**
990	1300	✓	✓	✓	✓	✓	✓	✓	**N348 E**
990	1300	✓	✓	✓	✓	✓	✓	✓	**NF348 E**
990	1300	✓	✓	✓	✓	✓	✓	✓	**NP348 E**
800	1200	✓	✓	✓	✓	✓	✓	✓	**N2348**
800	1200	✓	✓	✓	✓	✓	✓	✓	**NF2348**
800	1200	✓	✓	✓	✓	✓	✓	✓	**NP2348**
1900	2300	✓	✓	✓	✓	✓	✓	✓	**N1952**
1900	2300	✓	✓	✓	✓	✓	✓	✓	**NF1952**
1900	2300	✓	✓	✓	✓	✓	✓	✓	**NP1952**
1600	2400	✓	✓	✓	✓	✓	✓	✓	**N2952**
1600	2400	✓	✓	✓	✓	✓	✓	✓	**NF2952**
1600	2400	✓	✓	✓	✓	✓	✓	✓	**NP2952**
1400	2300	✓	✓	✓	✓	✓	✓	✓	**N3152**
1400	2300	✓	✓	✓	✓	✓	✓	✓	**NF3152**
1400	2300	✓	✓	✓	✓	✓	✓	✓	**NP3152**
1100	1300	✓	✓	✓	✓	✓	✓	✓	**N252 E**
1100	1300	✓	✓	✓	✓	✓	✓	✓	**NF252 E**
1100	1300	✓	✓	✓	✓	✓	✓	✓	**NP252 E**
990	1300	✓	✓	✓	✓	✓	✓	✓	**N2252**
990	1300	✓	✓	✓	✓	✓	✓	✓	**NF2252**
990	1300	✓	✓	✓	✓	✓	✓	✓	**NP2252**
880	1300	✓	✓	✓	✓	✓	✓	✓	**N3252**
880	1300	✓	✓	✓	✓	✓	✓	✓	**NF3252**
880	1300	✓	✓	✓	✓	✓	✓	✓	**NP3252**
750	1100	✓	✓	✓	✓	✓	✓	✓	**N2352**
750	1100	✓	✓	✓	✓	✓	✓	✓	**NF2352**
750	1100	✓	✓	✓	✓	✓	✓	✓	**NP2352**
790	1200	✓	✓	✓	✓	✓	✓	✓	**N3352**
790	1200	✓	✓	✓	✓	✓	✓	✓	**NF3352**
790	1200	✓	✓	✓	✓	✓	✓	✓	**NP3352**
2000	3300	✓	✓	✓	✓	✓	✓	✓	**N3856**
2000	3300	✓	✓	✓	✓	✓	✓	✓	**NF3856**
2000	3300	✓	✓	✓	✓	✓	✓	✓	**NP3856**

* Other products also available

https://nppnovoteh.com

5. CYLINDRICAL ROLLER BEARINGS

5.6. Single-row cylindrical roller bearings - types - N, NF, NP



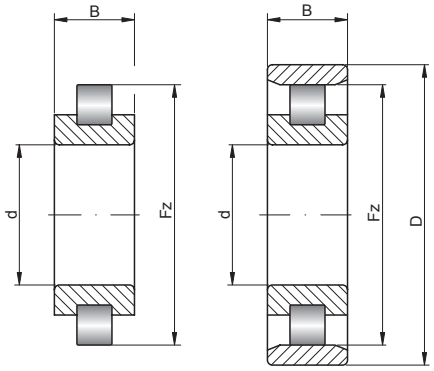

RN.. N..

280 – 360 mm

Shaft [mm]	Bearing No.	Series		Dimensions [mm]				Weight [kg]	Basic load ratings [kN]	
		SD	SB	d	D	B	Fz		dyn. C	stat. C_0
280 cont.	**N1956**	9	0	280	380	46	335	14,7	406	689
	NF1956	9	0	280	380	46	335	15	406	689
	NP1956	9	0	280	380	46	335	16	406	689
	N3156	1	3	280	460	146	416	97,2	1810	3280
	NF3156	1	3	280	460	146	416	105	1810	3280
	NP3156	1	3	280	460	146	416	109	1810	3280
	N256 E	2	0	280	500	80	449	72,7	1140	1680
	NF256 E	2	0	280	500	80	449	78	1140	1680
	NP256 E	2	0	280	500	80	449	81	1140	1680
300	**N3860**	8	3	300	380	60	358	16,6	543	1300
	NF3860	8	3	300	380	60	358	18	543	1300
	NP3860	8	3	300	380	60	358	19	543	1300
	N1960	9	0	300	420	56	388	23,3	507	873
	NF1960	9	0	300	420	56	388	25	507	873
	NP1960	9	0	300	420	56	388	26	507	873
	N3060	0	3	300	460	118	418	71,3	1290	2470
	NF3060	0	3	300	460	118	418	77	1290	2470
	NP3060	0	3	300	460	118	418	80	1290	2470
	N3160	1	3	300	500	160	448	129	2150	3940
	NF3160	1	3	300	500	160	448	139	2150	3940
	NP3160	1	3	300	500	160	448	145	2150	3940
	N260 E	2	0	300	540	85	484	90,7	1350	1960
	NF260 E	2	0	300	540	85	484	98	1350	1960
	NP260 E	2	0	300	540	85	484	102	1350	1960
320	**N3064**	0	3	320	480	121	438	76,4	1320	2590
	NF3064	0	3	320	480	121	438	82	1320	2590
	NP3064	0	3	320	480	121	438	85	1320	2590
	N264 E	2	0	320	580	92	520	114	1540	2270
	NF264 E	2	0	320	580	92	520	123	1540	2270
	NP264 E	2	0	320	580	92	520	128	1540	2270
340	**N3868**	8	3	340	420	60	402	18,1	624	1500
	NF3868	8	3	340	420	60	402	20	624	1500
	NP3868	8	3	340	420	60	402	21	624	1500
	N1968	9	0	340	460	56	430	25,7	605	1080
	NF1968	9	0	340	460	56	430	28	605	1080
	NP1968	9	0	340	460	56	430	29	605	1080
	N2968	9	2	340	460	72	428	34,7	800	1620
	NF2968	9	2	340	460	72	428	37	800	1620
	NP2968	9	2	340	460	72	428	39	800	1620
	N3068	0	3	340	520	133	473	102	1570	3080
	NF3068	0	3	340	520	133	473	109	1570	3080
	NP3068	0	3	340	520	133	473	114	1570	3080
360	**N1872**	8	0	360	440	38	420	11,7	339	692
	NF1872	8	0	360	440	38	420	12	339	692
	NP1872	8	0	360	440	38	420	13	339	692
	N1972	9	0	360	480	56	448	27,3	566	1060
	NF1972	9	0	360	480	56	448	30	566	1060
	NP1972	9	0	360	480	56	448	31	566	1060
	N2972	9	2	360	480	72	447	37,2	845	1820
	NF2972	9	2	360	480	72	447	40	845	1820
	NP2972	9	2	360	480	72	447	42	845	1820
	N3072	0	3	360	540	134	493	111	1970	4180

- warehouse - order - phone

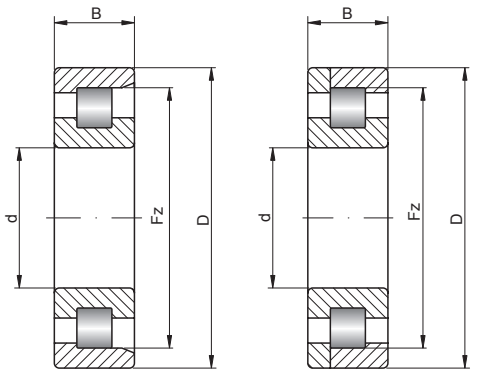

Limiting speed [rpm]		Basic makes*							Bearing No.
grease	oil	-	M	TV	C2	C3	C4	K	
1700	2000	✓	✓	✓	✓	✓	✓	✓	**N1956**
1700	2000	✓	✓	✓	✓	✓	✓	✓	**NF1956**
1700	2000	✓	✓	✓	✓	✓	✓	✓	**NP1956**
1300	2150	✓	✓	✓	✓	✓	✓	✓	**N3156**
1300	2150	✓	✓	✓	✓	✓	✓	✓	**NF3156**
1300	2150	✓	✓	✓	✓	✓	✓	✓	**NP3156**
1000	1200	✓	✓	✓	✓	✓	✓	✓	**N256 E**
1000	1200	✓	✓	✓	✓	✓	✓	✓	**NF256 E**
1000	1200	✓	✓	✓	✓	✓	✓	✓	**NP256 E**
1800	2900	✓	✓	✓	✓	✓	✓	✓	**N3860**
1800	2900	✓	✓	✓	✓	✓	✓	✓	**NF3860**
1800	2900	✓	✓	✓	✓	✓	✓	✓	**NP3860**
1600	1900	✓	✓	✓	✓	✓	✓	✓	**N1960**
1600	1900	✓	✓	✓	✓	✓	✓	✓	**NF1960**
1600	1900	✓	✓	✓	✓	✓	✓	✓	**NP1960**
1400	2200	✓	✓	✓	✓	✓	✓	✓	**N3060**
1400	2200	✓	✓	✓	✓	✓	✓	✓	**NF3060**
1400	2200	✓	✓	✓	✓	✓	✓	✓	**NP3060**
1250	1900	✓	✓	✓	✓	✓	✓	✓	**N3160**
1250	1900	✓	✓	✓	✓	✓	✓	✓	**NF3160**
1250	1900	✓	✓	✓	✓	✓	✓	✓	**NP3160**
920	1100	✓	✓	✓	✓	✓	✓	✓	**N260 E**
920	1100	✓	✓	✓	✓	✓	✓	✓	**NF260 E**
920	1100	✓	✓	✓	✓	✓	✓	✓	**NP260 E**
1350	2000	✓	✓	✓	✓	✓	✓	✓	**N3064**
1350	2000	✓	✓	✓	✓	✓	✓	✓	**NF3064**
1350	2000	✓	✓	✓	✓	✓	✓	✓	**NP3064**
840	1000	✓	✓	✓	✓	✓	✓	✓	**N264 E**
840	1000	✓	✓	✓	✓	✓	✓	✓	**NF264 E**
840	1000	✓	✓	✓	✓	✓	✓	✓	**NP264 E**
1500	2200	✓	✓	✓	✓	✓	✓	✓	**N3868**
1500	2200	✓	✓	✓	✓	✓	✓	✓	**NF3868**
1500	2200	✓	✓	✓	✓	✓	✓	✓	**NP3868**
1400	1700	✓	✓	✓	✓	✓	✓	✓	**N1968**
1400	1700	✓	✓	✓	✓	✓	✓	✓	**NF1968**
1400	1700	✓	✓	✓	✓	✓	✓	✓	**NP1968**
1400	1900	✓	✓	✓	✓	✓	✓	✓	**N2968**
1400	1900	✓	✓	✓	✓	✓	✓	✓	**NF2968**
1400	1900	✓	✓	✓	✓	✓	✓	✓	**NP2968**
1300	1900	✓	✓	✓	✓	✓	✓	✓	**N3068**
1300	1900	✓	✓	✓	✓	✓	✓	✓	**NF3068**
1300	1900	✓	✓	✓	✓	✓	✓	✓	**NP3068**
1500	2000	✓	✓	✓	✓	✓	✓	✓	**N1872**
1500	2000	✓	✓	✓	✓	✓	✓	✓	**NF1872**
1500	2000	✓	✓	✓	✓	✓	✓	✓	**NP1872**
1300	1500	✓	✓	✓	✓	✓	✓	✓	**N1972**
1300	1500	✓	✓	✓	✓	✓	✓	✓	**NF1972**
1300	1500	✓	✓	✓	✓	✓	✓	✓	**NP1972**
1200	1700	✓	✓	✓	✓	✓	✓	✓	**N2972**
1200	1700	✓	✓	✓	✓	✓	✓	✓	**NF2972**
1200	1700	✓	✓	✓	✓	✓	✓	✓	**NP2972**
1200	1700	✓	✓	✓	✓	✓	✓	✓	**N3072**

* Other products also available

https://nppnovoteh.com

5. CYLINDRICAL ROLLER BEARINGS

5.6. Single-row cylindrical roller bearings - types - N, NF, NP



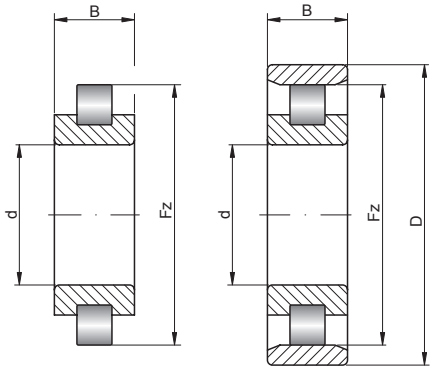

360 – 500 mm

Shaft [mm]	Bearing No.	Series		Dimensions [mm]				Weight [kg]	Basic load ratings [kN]	
		SD	SB	d	D	B	Fz		dyn. C	stat. C_0
360 cont.	**NF3072**	0	3	360	540	134	493	120	1970	4180
	NP3072	0	3	360	540	134	493	125	1970	4180
380	**N3876**	8	3	380	480	75	455	32,3	852	1970
	NF3876	8	3	380	480	75	455	35	852	1970
	NP3876	8	3	380	480	75	455	36	852	1970
	N3076	0	3	380	560	135	513	113	1690	3470
	NF3076	0	3	380	560	135	513	122	1690	3470
	NP3076	0	3	380	560	135	513	127	1690	3470
400	**N1880**	8	0	400	500	46	474	20,1	456	924
	NF1880	8	0	400	500	46	474	22	456	924
	NP1880	8	0	400	500	46	474	23	456	924
	N3880	8	3	400	500	75	474	34,2	852	2060
	NF3880	8	3	400	500	75	474	36	852	2060
	NP3880	8	3	400	500	75	474	38	852	2060
	N3080	0	3	400	600	148	550	148	2250	4370
	NF3080	0	3	400	600	148	550	159	2250	4370
	NP3080	0	3	400	600	148	550	166	2250	4370
420	**N3884**	8	3	420	520	75	494	35,5	882	2260
	NF3884	8	3	420	520	75	494	38	882	2260
	NP3884	8	3	420	520	75	494	40	882	2260
	N1984	9	0	420	560	65	524	42,5	800	1510
	NF1984	9	0	420	560	65	524	45	800	1510
	NP1984	9	0	420	560	65	524	47	800	1510
	N3084	0	3	420	620	150	570	156	1380	4770
	NF3084	0	3	420	620	150	570	168	1380	4770
	NP3084	0	3	420	620	150	570	175	1380	4770
460	**N1992**	9	0	460	620	74	580	60,8	1060	1990
	NF1992	9	0	460	620	74	580	65	1060	1990
	NP1992	9	0	460	620	74	580	68	1060	1990
	N3092	0	3	460	680	163	627	206	2960	6150
	NF3092	0	3	460	680	163	627	223	2960	6150
	NP3092	0	3	460	680	163	627	232	2960	6150
	N1892	8	0	460	580	56	550	37	825	1700
	NF1892	8	0	460	580	56	550	39	825	1700
	NP1892	8	0	460	580	56	550	41	825	1700
480	**N1996**	9	0	480	650	78	605	72,7	1130	2200
	NF1996	9	0	480	650	78	605	78	1130	2200
	NP1996	9	0	480	650	78	605	81	1130	2200
	N2996	9	2	480	650	100	605	96,8	1600	3450
	NF2996	9	2	480	650	100	605	105	1600	3450
	NP2996	9	2	480	650	100	605	109	1600	3450
	N3096	0	3	480	700	165	647	216	3030	6410
	NF3096	0	3	480	700	165	647	233	3030	6410
	NP3096	0	3	480	700	165	647	243	3030	6410
500	**N18/500**	8	0	500	620	56	590	37,3	705	1560
	NF18/500	8	0	500	620	56	590	40	705	1560
	NP18/500	8	0	500	620	56	590	42	705	1560
	N38/500	8	3	500	620	90	590	61,8	1210	3140
	NF38/500	8	3	500	620	90	590	66	1210	3140
	NP38/500	8	3	500	620	90	590	69	1210	3140

- warehouse - order - phone

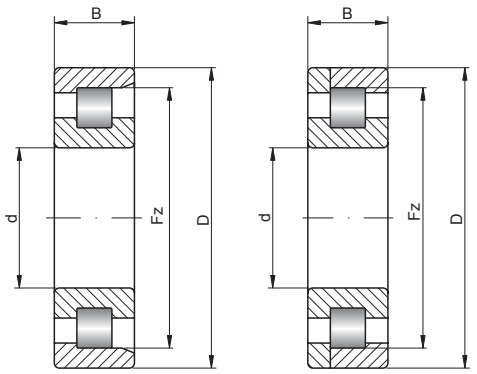

Limiting speed [rpm]		Basic makes*							Bearing No.
grease	oil	-	M	TV	C2	C3	C4	K	
1200	1700	✓	✓	✓	✓	✓	✓	✓	**NF3072**
1200	1700	✓	✓	✓	✓	✓	✓	✓	**NP3072**
1200	1800	✓	✓	✓	✓	✓	✓	✓	**N3876**
1200	1800	✓	✓	✓	✓	✓	✓	✓	**NF3876**
1200	1800	✓	✓	✓	✓	✓	✓	✓	**NP3876**
1100	1600	✓	✓	✓	✓	✓	✓	✓	**N3076**
1100	1600	✓	✓	✓	✓	✓	✓	✓	**NF3076**
1100	1600	✓	✓	✓	✓	✓	✓	✓	**NP3076**
1300	1700	✓	✓	✓	✓	✓	✓	✓	**N1880**
1300	1700	✓	✓	✓	✓	✓	✓	✓	**NF1880**
1300	1700	✓	✓	✓	✓	✓	✓	✓	**NP1880**
1100	1600	✓	✓	✓	✓	✓	✓	✓	**N3880**
1100	1600	✓	✓	✓	✓	✓	✓	✓	**NF3880**
1100	1600	✓	✓	✓	✓	✓	✓	✓	**NP3880**
1000	1500	✓	✓	✓	✓	✓	✓	✓	**N3080**
1000	1500	✓	✓	✓	✓	✓	✓	✓	**NF3080**
1000	1500	✓	✓	✓	✓	✓	✓	✓	**NP3080**
900	1100	✓	✓	✓	✓	✓	✓	✓	**N3884**
900	1100	✓	✓	✓	✓	✓	✓	✓	**NF3884**
900	1100	✓	✓	✓	✓	✓	✓	✓	**NP3884**
860	1000	✓	✓	✓	✓	✓	✓	✓	**N1984**
860	1000	✓	✓	✓	✓	✓	✓	✓	**NF1984**
860	1000	✓	✓	✓	✓	✓	✓	✓	**NP1984**
900	1400	✓	✓	✓	✓	✓	✓	✓	**N3084**
900	1400	✓	✓	✓	✓	✓	✓	✓	**NF3084**
900	1400	✓	✓	✓	✓	✓	✓	✓	**NP3084**
780	920	✓	✓	✓	✓	✓	✓	✓	**N1992**
780	920	✓	✓	✓	✓	✓	✓	✓	**NF1992**
780	920	✓	✓	✓	✓	✓	✓	✓	**NP1992**
850	1300	✓	✓	✓	✓	✓	✓	✓	**N3092**
850	1300	✓	✓	✓	✓	✓	✓	✓	**NF3092**
850	1300	✓	✓	✓	✓	✓	✓	✓	**NP3092**
1100	1400	✓	✓	✓	✓	✓	✓	✓	**N1892**
1100	1400	✓	✓	✓	✓	✓	✓	✓	**NF1892**
1100	1400	✓	✓	✓	✓	✓	✓	✓	**NP1892**
750	860	✓	✓	✓	✓	✓	✓	✓	**N1996**
750	860	✓	✓	✓	✓	✓	✓	✓	**NF1996**
750	860	✓	✓	✓	✓	✓	✓	✓	**NP1996**
900	1200	✓	✓	✓	✓	✓	✓	✓	**N2996**
900	1200	✓	✓	✓	✓	✓	✓	✓	**NF2996**
900	1200	✓	✓	✓	✓	✓	✓	✓	**NP2996**
800	1200	✓	✓	✓	✓	✓	✓	✓	**N3096**
800	1200	✓	✓	✓	✓	✓	✓	✓	**NF3096**
800	1200	✓	✓	✓	✓	✓	✓	✓	**NP3096**
1000	1300	✓	✓	✓	✓	✓	✓	✓	**N18/500**
1000	1300	✓	✓	✓	✓	✓	✓	✓	**NF18/500**
1000	1300	✓	✓	✓	✓	✓	✓	✓	**NP18/500**
800	1000	✓	✓	✓	✓	✓	✓	✓	**N38/500**
800	1000	✓	✓	✓	✓	✓	✓	✓	**NF38/500**
800	1000	✓	✓	✓	✓	✓	✓	✓	**NP38/500**

* Other products also available

https://nppnovoteh.com

5. CYLINDRICAL ROLLER BEARINGS

5.6. Single-row cylindrical roller bearings - types - N, NF, NP



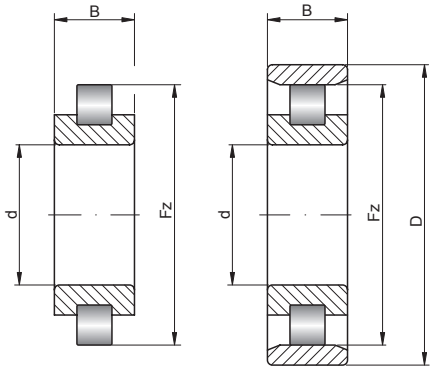

500 – 670 mm

Shaft [mm]	Bearing No.	Series		Dimensions [mm]				Weight [kg]	Basic load ratings [kN]	
		SD	SB	d	D	B	Fz		dyn. C	stat. C_0
500 cont.	**N19/500**	9	0	500	670	78	626	78,5	1480	3160
	NF19/500	9	0	500	670	78	626	85	1480	3160
	NP19/500	9	0	500	670	78	626	89	1480	3160
	N29/500	9	2	500	670	100	626	101	1940	4500
	NF29/500	9	2	500	670	100	626	108	1940	4500
	NP29/500	9	2	500	670	100	626	113	1940	4500
	N10/500	0	0	500	720	100	666	141	2270	4440
	NF10/500	0	0	500	720	100	666	153	2270	4440
	NP10/500	0	0	500	720	100	666	159	2270	4440
	N39/500	9	3	500	670	128	626	130	2330	5200
	NF39/500	9	3	500	670	128	626	140	2330	5200
	NP39/500	9	3	500	670	128	626	146	2330	5200
530	**N19/530**	9	0	530	710	82	665	86,9	1320	2560
	NF19/530	9	0	530	710	82	665	94	1320	2560
	NP19/530	9	0	530	710	82	665	98	1320	2560
	N29/530	9	2	530	710	106	667	118	2160	4850
	NF29/530	9	2	530	710	106	667	128	2160	4850
	NP29/530	9	2	530	710	106	667	133	2160	4850
	N30/530 E	0	3	530	780	185	725	309	4740	10100
	NF30/530 E	0	3	530	780	185	725	333	4740	10100
	NP30/530 E	0	3	530	780	185	725	347	4740	10100
560	**N19/560**	9	0	560	750	85	705	105	1600	3260
	NF19/560	9	0	560	750	85	705	113	1600	3260
	NP19/560	9	0	560	750	85	705	118	1600	3260
	N29/560	9	2	560	750	112	705	140	2040	4480
	NF29/560	9	2	560	750	112	705	152	2040	4480
	NP29/560	9	2	560	750	112	705	158	2040	4480
	N10/560	0	0	560	820	115	760	210	2890	5630
	NF10/560	0	0	560	820	115	760	227	2890	5630
	NP10/560	0	0	560	820	115	760	236	2890	5630
	N31/560	1	3	560	920	280	832	745	7420	15100
	NF31/560	1	3	560	920	280	832	804	7420	15100
	NP31/560	1	3	560	920	280	832	837	7420	15100
600	**N19/600**	9	0	600	800	90	752	126	1980	4170
	NF19/600	9	0	600	800	90	752	135	1980	4170
	NP19/600	9	0	600	800	90	752	141	1980	4170
630	**N28/630**	8	2	630	780	88	745	91,8	1510	3690
	NF28/630	8	2	630	780	88	745	99	1510	3690
	NP28/630	8	2	630	780	88	745	103	1510	3690
	N19/630	9	0	630	850	100	799	165	2450	5240
	NF19/630	9	0	630	850	100	799	178	2450	5240
	NP19/630	9	0	630	850	100	799	185	2450	5240
	N29/630	9	2	630	850	128	799	210	3100	7080
	NF29/630	9	2	630	850	128	799	227	3100	7080
	NP29/630	9	2	630	850	128	799	236	3100	7080
	N38/630	8	3	630	780	112	745	125	2200	5700
	NF38/630	8	3	630	780	112	745	134	2200	5700
	NP38/630	8	3	630	780	112	745	140	2200	5700
670	**N18/670**	8	0	670	820	69	784	76,6	1530	3750
	NF18/670	8	0	670	820	69	784	84	1530	3750
	NP18/670	8	0	670	820	69	784	87	1530	3750

- warehouse - order - phone

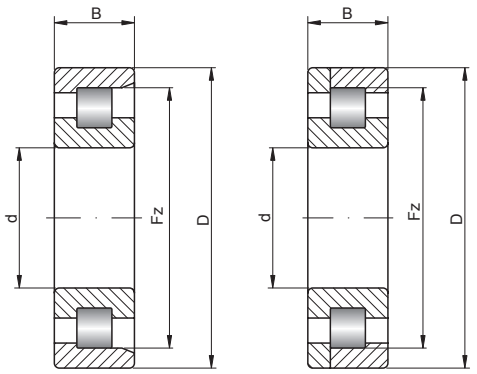

Limiting speed [rpm]		Basic makes*							Bearing No.
grease	oil	-	M	TV	C2	C3	C4	K	
720	840								**N19/500**
720	840								**NF19/500**
720	840								**NP19/500**
860	1100								**N29/500**
860	1100								**NF29/500**
860	1100								**NP29/500**
1100	1500								**N10/500**
1100	1500								**NF10/500**
1100	1500								**NP10/500**
800	1200								**N39/500**
800	1200								**NF39/500**
800	1200								**NP39/500**
700	820								**N19/530**
700	820								**NF19/530**
700	820								**NP19/530**
830	1050								**N29/530**
830	1050								**NF29/530**
830	1050								**NP29/530**
700	1000								**N30/530 E**
700	1000								**NF30/530 E**
700	1000								**NP30/530 E**
680	800								**N19/560**
680	800								**NF19/560**
680	800								**NP19/560**
780	1000								**N29/560**
780	1000								**NF29/560**
780	1000								**NP29/560**
1000	1300								**N10/560**
1000	1300								**NF10/560**
1000	1300								**NP10/560**
540	900								**N31/560**
540	900								**NF31/560**
540	900								**NP31/560**
650	770								**N19/600**
650	770								**NF19/600**
650	770								**NP19/600**
950	1600								**N28/630**
950	1600								**NF28/630**
950	1600								**NP28/630**
620	750								**N19/630**
620	750								**NF19/630**
620	750								**NP19/630**
680	850								**N29/630**
680	850								**NF29/630**
680	850								**NP29/630**
670	670								**N38/630**
670	670								**NF38/630**
670	670								**NP38/630**
900	1100								**N18/670**
900	1100								**NF18/670**
900	1100								**NP18/670**

* Other products also available

https://nppnovoteh.com

5. CYLINDRICAL ROLLER BEARINGS

5.6. Single-row cylindrical roller bearings - types - N, NF, NP



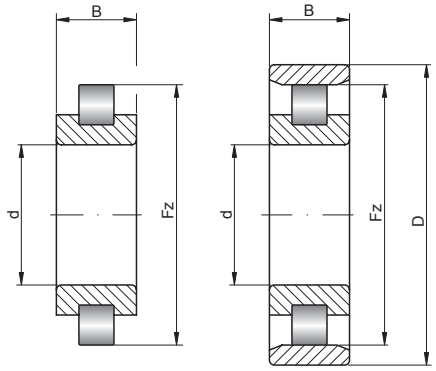

710 – 1250 mm

Shaft [mm]	Bearing No.	Series		Dimensions [mm]				Weight [kg]	Basic load ratings [kN]	
		SD	SB	d	D	B	Fz		dyn. C	stat. C_0
710	**N18/710**	8	0	710	870	74	831	95,4	1750	4400
	NF18/710	8	0	710	870	74	831	103	1750	4400
	NP18/710	8	0	710	870	74	831	107	1750	4400
	N19/710	9	0	710	950	106	894	215	2910	6370
	NF19/710	9	0	710	950	106	894	232	2910	6370
	NP19/710	9	0	710	950	106	894	242	2910	6370
	N29/710	9	2	710	950	140	894	279	3650	8530
	NF29/710	9	2	710	950	140	894	300	3650	8530
	NP29/710	9	2	710	950	140	894	313	3650	8530
	N28/710	8	2	710	870	95	831	130	1940	5000
	NF28/710	8	2	710	870	95	831	140	1940	5000
	NP28/710	8	2	710	870	95	831	146	1940	5000
750	**N19/750**	9	0	750	1000	112	943	265	2810	5850
	NF19/750	9	0	750	1000	112	943	286	2810	5850
	NP19/750	9	0	750	1000	112	943	298	2810	5850
	N10/800	0	0	800	1150	155	1062	545	5180	10900
	NF10/800	0	0	800	1150	155	1062	588	5180	10900
	NP10/800	0	0	800	1150	155	1062	613	5180	10900
850	**N28/850**	8	2	850	1030	106	980	175	2120	5960
	NF28/850	8	2	850	1030	106	980	189	2120	5960
	NP28/850	8	2	850	1030	106	980	197	2120	5960
	N19/850	9	0	850	1120	118	1053	310	3630	8190
	NF19/850	9	0	850	1120	118	1053	334	3630	8190
	NP19/850	9	0	850	1120	118	1053	348	3630	8190
	N29/850	9	2	850	1120	155	1053	430	4680	11200
	NF29/850	9	2	850	1120	155	1053	464	4680	11200
	NP29/850	9	2	850	1120	155	1053	483	4680	11200
900	**N28/900**	8	2	900	1090	112	1045	240	2700	7200
	NF28/900	8	2	900	1090	112	1045	259	2700	7200
	NP28/900	8	2	900	1090	112	1045	270	2700	7200
950	**N38/950**	8	3	950	1150	150	1102	312	4030	12100
	NF38/950	8	3	950	1150	150	1102	336	4030	12100
	NP38/950	8	3	950	1150	150	1102	350	4030	12100
1000	**N28/1000**	8	2	1000	1220	128	1165	350	3690	10000
	NF28/1000	8	2	1000	1220	128	1165	377	3690	10000
	NP28/1000	8	2	1000	1220	128	1165	393	3690	10000
1060	**N28/1060**	8	2	1060	1280	128	1225	360	3580	10400
	NF28/1060	8	2	1060	1280	128	1225	389	3580	10400
	NP28/1060	8	2	1060	1280	128	1225	405	3580	10400
	N30/1060	0	3	1060	1500	325	1390	1900	13000	32500
	NF30/1060	0	3	1060	1500	325	1390	2050	13000	32500
	NP30/1060	0	3	1060	1500	325	1390	2135	13000	32500
1180	**N39/1180**	9	3	1180	1540	272	1466	1400	11200	29000
	NF39/1180	9	3	1180	1540	272	1466	1510	11200	29000
	NP39/1180	9	3	1180	1540	272	1466	1573	11200	29000
1250	**N20/1250**	0	2	1250	1750	290	1635	2320	12800	30500
	NF20/1250	0	2	1250	1750	290	1635	2503	12800	30500

- warehouse - order - phone

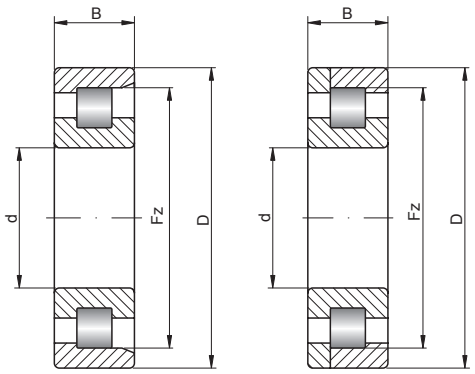

Limiting speed [rpm]		Basic makes*							Bearing No.
grease	oil	-	M	TV	C2	C3	C4	K	
800	1000	✓	✓	✓	✓	✓	✓	✓	**N18/710**
800	1000	✓	✓	✓	✓	✓	✓	✓	**NF18/710**
800	1000	✓	✓	✓	✓	✓	✓	✓	**NP18/710**
590	730	✓	✓	✓	✓	✓	✓	✓	**N19/710**
590	730	✓	✓	✓	✓	✓	✓	✓	**NF19/710**
590	730	✓	✓	✓	✓	✓	✓	✓	**NP19/710**
600	800	✓	✓	✓	✓	✓	✓	✓	**N29/710**
600	800	✓	✓	✓	✓	✓	✓	✓	**NF29/710**
600	800	✓	✓	✓	✓	✓	✓	✓	**NP29/710**
630	850	✓	✓	✓	✓	✓	✓	✓	**N28/710**
630	850	✓	✓	✓	✓	✓	✓	✓	**NF28/710**
630	850	✓	✓	✓	✓	✓	✓	✓	**NP28/710**
560	700	✓	✓	✓	✓	✓	✓	✓	**N19/750**
560	700	✓	✓	✓	✓	✓	✓	✓	**NF19/750**
560	700	✓	✓	✓	✓	✓	✓	✓	**NP19/750**
800	1000	✓	✓	✓	✓	✓	✓	✓	**N10/800**
800	1000	✓	✓	✓	✓	✓	✓	✓	**NF10/800**
800	1000	✓	✓	✓	✓	✓	✓	✓	**NP10/800**
500	700	✓	✓	✓	✓	✓	✓	✓	**N28/850**
500	700	✓	✓	✓	✓	✓	✓	✓	**NF28/850**
500	700	✓	✓	✓	✓	✓	✓	✓	**NP28/850**
450	600	✓	✓	✓	✓	✓	✓	✓	**N19/850**
450	600	✓	✓	✓	✓	✓	✓	✓	**NF19/850**
450	600	✓	✓	✓	✓	✓	✓	✓	**NP19/850**
480	600	✓	✓	✓	✓	✓	✓	✓	**N29/850**
480	600	✓	✓	✓	✓	✓	✓	✓	**NF29/850**
480	600	✓	✓	✓	✓	✓	✓	✓	**NP29/850**
450	600	✓	✓	✓	✓	✓	✓	✓	**N28/900**
450	600	✓	✓	✓	✓	✓	✓	✓	**NF28/900**
450	600	✓	✓	✓	✓	✓	✓	✓	**NP28/900**
400	600	✓	✓	✓	✓	✓	✓	✓	**N38/950**
400	600	✓	✓	✓	✓	✓	✓	✓	**NF38/950**
400	600	✓	✓	✓	✓	✓	✓	✓	**NP38/950**
400	530	✓	✓	✓	✓	✓	✓	✓	**N28/1000**
400	530	✓	✓	✓	✓	✓	✓	✓	**NF28/1000**
400	530	✓	✓	✓	✓	✓	✓	✓	**NP28/1000**
300	360	✓	✓	✓	✓	✓	✓	✓	**N28/1060**
300	360	✓	✓	✓	✓	✓	✓	✓	**NF28/1060**
300	360	✓	✓	✓	✓	✓	✓	✓	**NP28/1060**
220	280	✓	✓	✓	✓	✓	✓	✓	**N30/1060**
220	280	✓	✓	✓	✓	✓	✓	✓	**NF30/1060**
220	280	✓	✓	✓	✓	✓	✓	✓	**NP30/1060**
200	260	✓	✓	✓	✓	✓	✓	✓	**N39/1180**
200	260	✓	✓	✓	✓	✓	✓	✓	**NF39/1180**
200	260	✓	✓	✓	✓	✓	✓	✓	**NP39/1180**
170	200	✓	✓	✓	✓	✓	✓	✓	**N20/1250**
170	200	✓	✓	✓	✓	✓	✓	✓	**NF20/1250**

* Other products also available

https://nppnovoteh.com

5. CYLINDRICAL ROLLER BEARINGS

5.6. Single-row cylindrical roller bearings - types - N, NF, NP



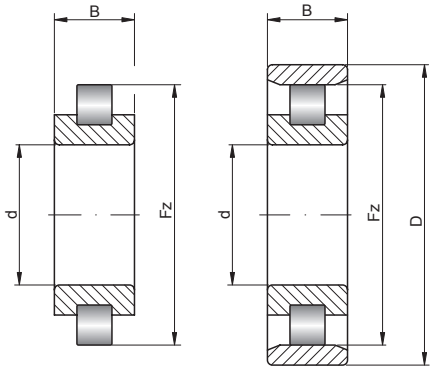

RN.. N..

1250 – 1600 mm

Shaft [mm]	Bearing No.	Series		Dimensions [mm]				Weight [kg]	Basic load ratings [kN]	
		SD	SB	d	D	B	Fz		dyn. C	stat. C_0
1250 cont.	**NP20/1250**	0	2	1250	1750	290	1635	2607	12800	30500
1320	**N39/1320**	9	3	1320	1720	300	1640	1900	13200	34000
	NF39/1320	9	3	1320	1720	300	1640	2050	13200	34000
	NP39/1320	9	3	1320	1720	300	1640	2135	13200	34000
	N30/1320	0	3	1320	1850	400	1737	3550	21600	55000
	NF30/1320	0	3	1320	1850	400	1737	3829	21600	55000
	NP30/1320	0	3	1320	1850	400	1737	3989	21600	55000
1400	**N28/1400**	8	2	1400	1700	175	1637	860	6600	18300
	NF28/1400	8	2	1400	1700	175	1637	927	6600	18300
	NP28/1400	8	2	1400	1700	175	1637	966	6600	18300
1600	**N18/1600**	8	0	1600	1950	155	1866	986	7060	20100
	NF18/1600	8	0	1600	1950	155	1866	1064	7060	20100
	NP18/1600	8	0	1600	1950	155	1866	1108	7060	20100

- warehouse - order - phone

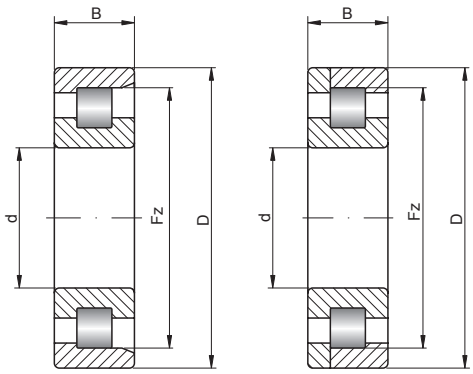

NF.. NP..

Limiting speed [rpm]		Basic makes*							Bearing No.
grease	oil	-	M	TV	C2	C3	C4	K	
170	200	✓	✓	✓	✓	✓	✓	✓	**NP20/1250**
220	320	✓	✓	✓	✓	✓	✓	✓	**N39/1320**
220	320	✓	✓	✓	✓	✓	✓	✓	**NF39/1320**
220	320	✓	✓	✓	✓	✓	✓	✓	**NP39/1320**
190	240	✓	✓	✓	✓	✓	✓	✓	**N30/1320**
190	240	✓	✓	✓	✓	✓	✓	✓	**NF30/1320**
190	240	✓	✓	✓	✓	✓	✓	✓	**NP30/1320**
220	280	✓	✓	✓	✓	✓	✓	✓	**N28/1400**
220	280	✓	✓	✓	✓	✓	✓	✓	**NF28/1400**
220	280	✓	✓	✓	✓	✓	✓	✓	**NP28/1400**
400	700	✓	✓	✓	✓	✓	✓	✓	**N18/1600**
400	700	✓	✓	✓	✓	✓	✓	✓	**NF18/1600**
400	700	✓	✓	✓	✓	✓	✓	✓	**NP18/1600**

* Other products also available



https://nppnovoteh.com

5. CYLINDRICAL ROLLER BEARINGS

5.7. Multi-row cylindrical roller bearings
- types - NN, NN..K



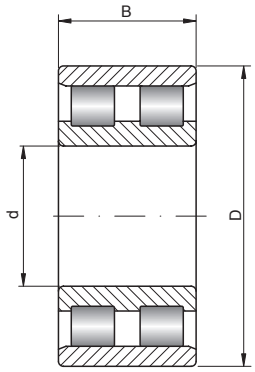

NN..

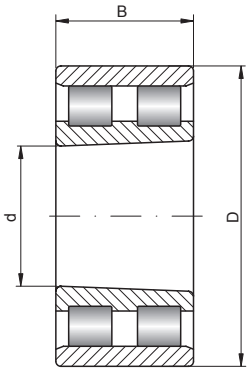

NN.. K

25 – 105 mm

Shaft [mm]	Bearing No.	Series		Dimensions [mm]			Weight [kg]	Basic load ratings [kN]	
		SD	SB	d	D	B		dyn. C	stat. C_0
25	**NN3005 K**	0	3	25	47	16	0,121	25,8	30
	NN3005	0	3	25	47	16	0,124	25,8	30
30	**NN3006 K**	0	3	30	55	19	0,193	31	37
	NN3006	0	3	30	55	19	0,199	31	37
35	**NN3007 K**	0	3	35	62	20	0,235	38	47,5
	NN3007	0	3	35	62	20	0,242	38	47,5
40	**NN3008 K**	0	3	40	68	21	0,303	43,5	55,5
	NN3008	0	3	40	68	21	0,312	43,5	55,5
45	**NN3009 K**	0	3	45	75	23	0,393	52	68,5
	NN3009	0	3	45	75	23	0,405	52	68,5
50	**NN3010 K**	0	3	50	80	23	0,419	53	72,5
	NN3010	0	3	50	80	23	0,433	53	72,5
55	**NN3011 K**	0	3	55	90	26	0,631	69,5	96,5
	NN3011	0	3	55	90	26	0,651	69,5	96,5
60	**NN3012 K**	0	3	60	95	26	0,683	71	102
	NN3012	0	3	60	95	26	0,704	71	102
65	**NN3013 K**	0	3	65	100	26	0,735	75	111
	NN3013	0	3	65	100	26	0,758	75	111
70	**NN3014 K**	0	3	70	110	30	1,01	94,5	143
	NN3014	0	3	70	110	30	1,04	94,5	143
75	**NN3015 K**	0	3	75	115	30	1,11	96,5	149
	NN3015	0	3	75	115	30	1,14	96,5	149
80	**NN3016 K**	0	3	80	125	34	1,47	116	179
	NN3016	0	3	80	125	34	1,52	116	179
85	**NN3017 K**	0	3	85	130	34	1,56	122	194
	NN3017	0	3	85	130	34	1,61	122	194
90	**NN3018 K**	0	3	90	140	37	2,01	143	228
	NN3018	0	3	90	140	37	2,07	143	228
95	**NN3019 K**	0	3	95	145	37	2,1	146	238
	NN3019	0	3	95	145	37	2,17	146	238
100	**NN4920**	9	4	100	140	40	1,75	131	260
	NN4920 K	9	4	100	140	40	1,7	131	260
	NN3020 K	0	3	100	150	37	2,19	153	256
	NN3020	0	3	100	150	37	2,26	153	256
	NN3120	1	3	100	165	52	4,41	230	354
	NN3120 K	1	3	100	165	52	4,28	230	354
105	**NN4921**	9	4	105	145	40	1,82	133	268
	NN4921 K	9	4	105	145	40	1,8	133	268
	NN3021 K	0	3	105	160	41	2,8	198	320
	NN3021	0	3	105	160	41	2,89	198	320

- warehouse - order - phone

Limiting speed [rpm]		Basic makes*					Bearing No.
grease	oil	-	M	TV	P51	P41	
14000	17000	●	◔	◔	◴	●	**NN3005 K**
14000	17000	◔	◔	◔	◔	◔	**NN3005**
12000	15000	●	◔	◔	◴	●	**NN3006 K**
12000	15000	◔	◔	◔	◔	◔	**NN3006**
11000	13000	●	◔	◔	◴	●	**NN3007 K**
11000	13000	◔	◔	◔	◔	◔	**NN3007**
9700	11000	●	◔	◔	◴	●	**NN3008 K**
9700	11000	◔	◔	◔	◔	◔	**NN3008**
8800	10000	●	◔	◔	◴	●	**NN3009 K**
8800	10000	◔	◔	◔	◔	◔	**NN3009**
8000	9400	●	◔	◔	◴	●	**NN3010 K**
8000	9400	◔	◔	◔	◔	◔	**NN3010**
7300	8600	●	◴	◔	◴	●	**NN3011 K**
7300	8600	◔	◔	◔	◔	◔	**NN3011**
6700	7900	●	◴	◔	◴	●	**NN3012 K**
6700	7900	◔	◔	◔	◔	◔	**NN3012**
6200	7300	●	◴	◔	◴	●	**NN3013 K**
6200	7300	◔	◔	◔	◔	◔	**NN3013**
5800	6800	●	◴	◔	◴	●	**NN3014 K**
5800	6800	◔	◔	◔	◔	◔	**NN3014**
5400	6300	●	◴	◔	◴	●	**NN3015 K**
5400	6300	◔	◔	◔	◔	◔	**NN3015**
5100	5900	●	◴	◔	◴	●	**NN3016 K**
5100	5900	◔	◔	◔	◔	◔	**NN3016**
4800	5600	●	◴	◔	◴	●	**NN3017 K**
4800	5600	◔	◔	◔	◔	◔	**NN3017**
4500	5300	●	●	◔	◴	●	**NN3018 K**
4500	5300	◔	◔	◔	◔	◔	**NN3018**
4300	5000	●	●	◔	◴	●	**NN3019 K**
4300	5000	◔	◔	◔	◔	◔	**NN3019**
4300	5100	◔	◔	◔	◔	◔	**NN4920**
4300	5100	◔	◔	◔	◔	◔	**NN4920 K**
4000	4800	●	●	◔	◴	●	**NN3020 K**
4000	4800	◔	◔	◔	◔	◔	**NN3020**
-	-	◔	◔	◔	◔	◔	**NN3120**
-	-	◔	◔	◔	◔	◔	**NN3120 K**
4100	4800	◔	◔	◔	◔	◔	**NN4921**
4100	4800	◔	◔	◔	◔	◔	**NN4921 K**
3800	4500	●	●	◔	◴	●	**NN3021 K**
3800	4500	◔	◔	◔	◔	◔	**NN3021**

* Other products also available



https://nppnovoteh.com

5. CYLINDRICAL ROLLER BEARINGS

5.7. Multi-row cylindrical roller bearings
- types - NN, NN..K



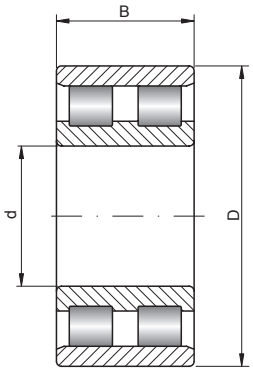

NN..

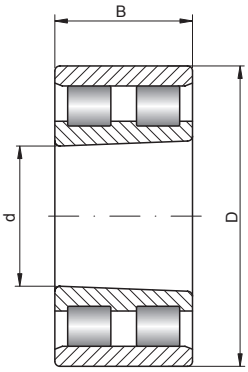

NN.. K

110 – 180 mm

Shaft [mm]	Bearing No.	Series		Dimensions [mm]			Weight [kg]	Basic load ratings [kN]	
		SD	SB	d	D	B		dyn. C	stat. C_0
110	**NN4922**	9	4	110	150	40	1,9	137	284
	NN4922 K	9	4	110	150	40	1,8	137	284
	NN3022 K	0	3	110	170	45	3,56	229	375
	NN3022	0	3	110	170	45	3,69	229	375
	NN4022	0	4	110	170	60	5	297	527
	NN4022 K	0	4	110	170	60	4,86	297	527
	NN3122	1	3	110	180	56	5,63	254	397
	NN3122 K	1	3	110	180	56	5,47	254	397
120	**NN4924**	9	4	120	165	45	2,63	183	360
	NN4924 K	9	4	120	165	45	2,6	183	360
	NN3024 K	0	3	120	180	46	3,83	233	390
	NN3024	0	3	120	180	46	3,98	233	390
	NN4024	0	4	120	180	60	5,35	312	573
	NN4024 K	0	4	120	180	60	5,19	312	573
	NN3124	1	3	120	200	62	7,72	320	508
	NN3124 K	1	3	120	200	62	7,5	320	508
130	**NN4926**	9	4	130	180	50	3,52	220	440
	NN4926 K	9	4	130	180	50	3,4	220	440
	NN3026 K	0	3	130	200	52	5,71	284	475
	NN3026	0	3	130	200	52	5,92	284	475
	NN3126	1	3	130	210	64	8,65	328	535
	NN3126 K	1	3	130	210	64	8,4	328	535
140	**NN4928**	9	4	140	190	50	3,76	227	470
	NN4928 K	9	4	140	190	50	3,7	227	470
	NN3028 K	0	3	140	210	53	6,21	298	515
	NN3028	0	3	140	210	53	6,44	298	515
	NN3128	1	3	140	225	68	10,2	368	612
	NN3128 K	1	3	140	225	68	9,9	368	612
150	**NN4930**	9	4	150	210	60	5,9	345	690
	NN4930 K	9	4	150	210	60	5,7	345	690
	NN3030 K	0	3	150	225	56	7,53	335	585
	NN3030	0	3	150	225	56	7,81	335	585
160	**NN4932**	9	4	160	220	60	6,24	355	740
	NN4932 K	9	4	160	220	60	6,1	355	740
	NN3032 K	0	3	160	240	60	8,59	375	660
	NN3032	0	3	160	240	60	8,92	375	660
	NN3132	1	3	160	270	86	20,1	606	1010
	NN3132 K	1	3	160	270	86	19,5	606	1010
170	**NN4934**	9	4	170	230	60	6,56	360	765
	NN4934 K	9	4	170	230	60	6,4	360	765
	NN3034 K	0	3	170	260	67	12,2	440	775
	NN3034	0	3	170	260	67	12,6	440	775
	NN3134	1	3	170	280	88	21,3	623	1060
	NN3134 K	1	3	170	280	88	20,7	623	1060
180	**NN4836**	8	4	180	225	45	4,09	228	544
	NN4836 K	8	4	180	225	45	3,97	228	544
	NN4936	9	4	180	250	69	9,46	460	965
	NN4936 K	9	4	180	250	69	9,2	460	965
	NN3036 K	0	3	180	280	74	16	565	995

- warehouse - order - phone

Limiting speed [rpm]		Basic makes*					Bearing No.
grease	oil	-	M	TV	P51	P41	
3900	4600						NN4922
3900	4600						NN4922 K
3600	4300						NN3022 K
3600	4300						NN3022
-	-						NN4022
-	-						NN4022 K
-	-						NN3122
-	-						NN3122 K
3600	4200						NN4924
3600	4200						NN4924 K
3300	3900						NN3024 K
3300	3900						NN3024
-	-						NN4024
-	-						NN4024 K
-	-						NN3124
-	-						NN3124 K
3300	3900						NN4926
3300	3900						NN4926 K
3100	3600						NN3026 K
3100	3600						NN3026
-	-						NN3126
-	-						NN3126 K
3000	3600						NN4928
3000	3600						NN4928 K
2800	3300						NN3028 K
2800	3300						NN3028
-	-						NN3128
-	-						NN3128 K
2800	3300						NN4930
2800	3300						NN4930 K
2600	3100						NN3030 K
2600	3100						NN3030
2600	3100						NN4932
2600	3100						NN4932 K
2500	2900						NN3032 K
2500	2900						NN3032
-	-						NN3132
-	-						NN3132 K
2500	2900						NN4934
2500	2900						NN4934 K
2300	2700						NN3034 K
2300	2700						NN3034
-	-						NN3134
-	-						NN3134 K
-	-						NN4836
-	-						NN4836 K
2300	2700						NN4936
2300	2700						NN4936 K
2200	2600						NN3036 K

* Other products also available



https://nppnovoteh.com

5. CYLINDRICAL ROLLER BEARINGS

5.7. Multi-row cylindrical roller bearings
- types - NN, NN..K



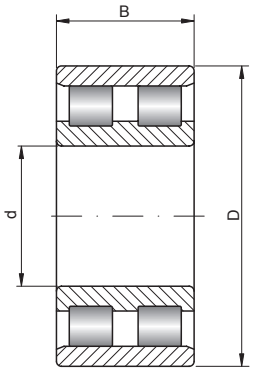

NN..

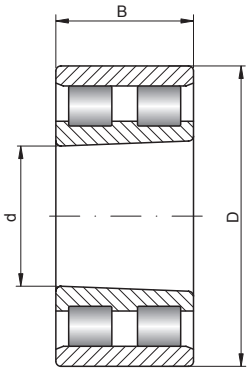

NN.. K

180 – 320 mm

Shaft [mm]	Bearing No.	Series		Dimensions [mm]			Weight [kg]	Basic load ratings [kN]	
		SD	SB	d	D	B		dyn. C	stat. C_0
180 cont.	**NN3036**	0	3	180	280	74	16,6	565	995
	NN3136	1	3	180	300	96	27,6	742	1280
	NN3136 K	1	3	180	300	96	26,8	742	1280
190	**NN4938**	9	4	190	260	69	9,93	475	1030
	NN4938 K	9	4	190	260	69	9,6	475	1030
	NN3038 K	0	3	190	290	75	17,4	580	1040
	NN3038	0	3	190	290	75	18	580	1040
	NN3138	1	3	190	320	104	33,9	897	1550
	NN3138 K	1	3	190	320	104	32,9	897	1550
200	**NN4940**	9	4	200	280	80	14	555	1180
	NN4940 K	9	4	200	280	80	13,6	555	1180
	NN3040 K	0	3	200	310	82	20,8	655	1170
	NN3040	0	3	200	310	82	21,6	655	1170
	NN3140	1	3	200	340	112	41,3	960	1640
	NN3140 K	1	3	200	340	112	40,1	960	1640
220	**NN4944**	9	4	220	300	80	15,2	585	1300
	NN4944 K	9	4	220	300	80	14,8	585	1300
	NN3044 K	0	3	220	340	90	28,2	815	1480
	NN3044	0	3	220	340	90	29,3	815	1480
	NN3144	1	3	220	370	120	52,2	1110	1950
	NN3144 K	1	3	220	370	120	50,7	1110	1950
240	**NN4948**	9	4	240	320	80	16,4	610	1410
	NN4948 K	9	4	240	320	80	15,9	610	1410
	NN3048 K	0	3	240	360	92	31,6	855	1600
	NN3048	0	3	240	360	92	32,8	855	1600
	NN3148	1	3	240	400	128	64,6	1270	2290
	NN3148 K	1	3	240	400	128	62,7	1270	2290
260	**NN4952**	9	4	260	360	100	28,3	900	2070
	NN4952 K	9	4	260	360	100	27,5	900	2070
	NN3052 K	0	3	260	400	104	45,8	1060	1990
	NN3052	0	3	260	400	104	47,4	1060	1990
	NN4052	0	4	260	400	140	62,6	1420	2720
	NN4052 K	0	4	260	400	140	60,8	1420	2720
280	**NN4956**	9	4	280	380	100	30,2	925	2200
	NN4956 K	9	4	280	380	100	29,3	925	2200
	NN3056 K	0	3	280	420	106	49,4	1080	2080
	NN3056	0	3	280	420	106	51,1	1080	2080
	NN3156	1	3	280	460	146	96,7	1700	3250
	NN3156 K	1	3	280	460	146	93,9	1700	3250
300	**NN4960**	9	4	300	420	118	46,4	1200	2800
	NN4960 K	9	4	300	420	118	45	1200	2800
	NN3060 K	0	3	300	460	118	68,7	1330	2560
	NN3060	0	3	300	460	118	70,8	1330	2560
	NN3160	1	3	300	500	160	126	2060	3840
	NN3160 K	1	3	300	500	160	122	2060	3840
320	**NN4964**	9	4	320	440	118	49	1240	2970
	NN4964 K	9	4	320	440	118	47,6	1240	2970
	NN3064 K	0	3	320	480	121	74	1350	2670

- warehouse - order - phone

https://nppnovoteh.com

Limiting speed [rpm]		Basic makes*					Bearing No.
grease	oil	-	M	TV	P51	P41	
2200	2600	✓	✓	✓	✓	✓	**NN3036**
-	-	✓	✓	✓	✓	✓	**NN3136**
-	-	✓	✓	✓	✓	✓	**NN3136 K**
2200	2600	✓	✓	✓	✓	✓	**NN4938**
2200	2600	✓	✓	✓	✓	✓	**NN4938 K**
2000	2400	✓	✓	✓	✓	✓	**NN3038 K**
2000	2400	✓	✓	✓	✓	✓	**NN3038**
-	-	✓	✓	✓	✓	✓	**NN3138**
-	-	✓	✓	✓	✓	✓	**NN3138 K**
2100	2400	✓	✓	✓	✓	✓	**NN4940**
2100	2400	✓	✓	✓	✓	✓	**NN4940 K**
1900	2300	✓	✓	✓	✓	✓	**NN3040 K**
1900	2300	✓	✓	✓	✓	✓	**NN3040**
-	-	✓	✓	✓	✓	✓	**NN3140**
-	-	✓	✓	✓	✓	✓	**NN3140 K**
1900	2200	✓	✓	✓	✓	✓	**NN4944**
1900	2200	✓	✓	✓	✓	✓	**NN4944 K**
1700	2100	✓	✓	✓	✓	✓	**NN3044 K**
1700	2100	✓	✓	✓	✓	✓	**NN3044**
-	-	✓	✓	✓	✓	✓	**NN3144**
-	-	✓	✓	✓	✓	✓	**NN3144 K**
1700	2000	✓	✓	✓	✓	✓	**NN4948**
1700	2000	✓	✓	✓	✓	✓	**NN4948 K**
1600	1900	✓	✓	✓	✓	✓	**NN3048 K**
1600	1900	✓	✓	✓	✓	✓	**NN3048**
-	-	✓	✓	✓	✓	✓	**NN3148**
-	-	✓	✓	✓	✓	✓	**NN3148 K**
1600	1800	✓	✓	✓	✓	✓	**NN4952**
1600	1800	✓	✓	✓	✓	✓	**NN4952 K**
1500	1700	✓	✓	✓	✓	✓	**NN3052 K**
1500	1700	✓	✓	✓	✓	✓	**NN3052**
-	-	✓	✓	✓	✓	✓	**NN4052**
-	-	✓	✓	✓	✓	✓	**NN4052 K**
1400	1700	✓	✓	✓	✓	✓	**NN4956**
1400	1700	✓	✓	✓	✓	✓	**NN4956 K**
1300	1600	✓	✓	✓	✓	✓	**NN3056 K**
1300	1600	✓	✓	✓	✓	✓	**NN3056**
-	-	✓	✓	✓	✓	✓	**NN3156**
-	-	✓	✓	✓	✓	✓	**NN3156 K**
1300	1500	✓	✓	✓	✓	✓	**NN4960**
1300	1500	✓	✓	✓	✓	✓	**NN4960 K**
1200	1500	✓	✓	✓	✓	✓	**NN3060 K**
1200	1500	✓	✓	✓	✓	✓	**NN3060**
-	-	✓	✓	✓	✓	✓	**NN3160**
-	-	✓	✓	✓	✓	✓	**NN3160 K**
1200	1400	✓	✓	✓	✓	✓	**NN4964**
1200	1400	✓	✓	✓	✓	✓	**NN4964 K**
1100	1300	✓	✓	✓	✓	✓	**NN3064 K**

* Other products also available



https://nppnovoteh.com

5. CYLINDRICAL ROLLER BEARINGS

5.7. Multi-row cylindrical roller bearings
- types - NN, NN..K



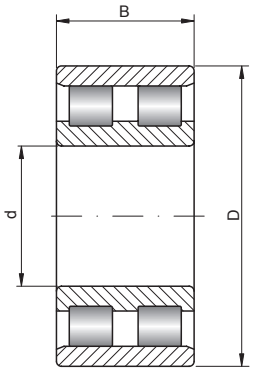

NN..

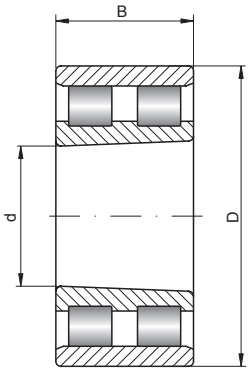

NN.. K

320 – 600 mm

Shaft [mm]	Bearing No.	Series		Dimensions [mm]			Weight [kg]	Basic load ratings [kN]	
		SD	SB	d	D	B		dyn. C	stat. C_0
320 cont.	**NN3064**	0	3	320	480	121	76,4	1350	2670
	NN3164	1	3	320	540	176	165	2420	4580
	NN3164 K	1	3	320	540	176	160	2420	4580
340	**NN3068 K**	0	3	340	520	133	98,5	1620	3200
	NN3068	0	3	340	520	133	102	1620	3200
360	**NN4872**	8	4	360	440	80	25,5	724	1990
	NN4872 K	8	4	360	440	80	24,8	724	1990
	NN3972	9	3	360	480	90	44,7	933	2080
	NN3972 K	9	3	360	480	90	43,4	933	2080
	NN3072 K	0	3	360	540	134	103	1650	3300
	NN3072	0	3	360	540	134	107	1650	3300
	NN3172	1	3	360	600	192	218	2820	5400
	NN3172 K	1	3	360	600	192	212	2820	5400
380	**NN3076 K**	0	3	380	560	135	109	1690	3450
	NN3076	0	3	380	560	135	113	1690	3450
	NN3176	1	3	380	650	194	230	2900	5690
	NN3176 K	1	3	380	650	194	223	2900	5690
400	**NN3980**	9	3	400	540	106	68	1240	2740
	NN3980 K	9	3	400	540	106	66	1240	2740
	NN3080 K	0	3	400	600	148	141	2040	4150
	NN3080	0	3	400	600	148	146	2040	4150
420	**NN3984**	9	3	420	560	106	71,1	1280	2900
	NN3984 K	9	3	420	560	106	69	1280	2900
	NN3084 K	0	3	420	620	150	148	2080	4300
	NN3084	0	3	420	620	150	154	2080	4300
	NN3184	1	3	420	700	220	341	3810	7440
	NN3184 K	1	3	420	700	220	331	3810	7440
440	**NN3088 K**	0	3	440	650	157	172	2420	5100
	NN3088	0	3	440	650	157	178	2420	5100
460	**NN4992**	9	4	460	620	160	135	2250	5440
	NN4992 K	9	4	460	620	160	131	2250	5440
	NN3092 K	0	3	460	680	163	195	2550	5350
	NN3092	0	3	460	680	163	202	2550	5350
480	**NN3096 K**	0	3	480	700	165	204	2770	5710
	NN3096	0	3	480	700	165	211	2770	5710
	NN3196	1	3	480	790	248	483	4410	8430
	NN3196 K	1	3	480	790	248	469	4410	8430
500	**NN30/500 K**	0	3	500	720	167	210	2970	6160
	NN30/500	0	3	500	720	167	217	2970	6160
560	**NN49/560**	9	4	560	750	190	231	3190	7940
	NN49/560 K	9	4	560	750	190	224	3190	7940
600	**NN30/600 K**	0	3	600	870	200	377	3940	8450
	NN30/600	0	3	600	870	200	388	3940	8450

- warehouse - order - phone

Limiting speed [rpm]		Basic makes*					Bearing No.
grease	oil	-	M	TV	P51	P41	
1100	1300	✓	✓	✓	✓	✓	**NN3064**
-	-	✓	✓	✓	✓	✓	**NN3164**
-	-	✓	✓	✓	✓	✓	**NN3164 K**
1100	1300	✓	✓	✓	✓	✓	**NN3068 K**
1100	1300	✓	✓	✓	✓	✓	**NN3068**
-	-	✓	✓	✓	✓	✓	**NN4872**
-	-	✓	✓	✓	✓	✓	**NN4872 K**
-	-	✓	✓	✓	✓	✓	**NN3972**
-	-	✓	✓	✓	✓	✓	**NN3972 K**
1000	1200	✓	✓	✓	✓	✓	**NN3072 K**
1000	1200	✓	✓	✓	✓	✓	**NN3072**
-	-	✓	✓	✓	✓	✓	**NN3172**
-	-	✓	✓	✓	✓	✓	**NN3172 K**
940	1100	✓	✓	✓	✓	✓	**NN3076 K**
940	1100	✓	✓	✓	✓	✓	**NN3076**
-	-	✓	✓	✓	✓	✓	**NN3176**
-	-	✓	✓	✓	✓	✓	**NN3176 K**
-	-	✓	✓	✓	✓	✓	**NN3980**
-	-	✓	✓	✓	✓	✓	**NN3980 K**
880	1000	✓	✓	✓	✓	✓	**NN3080 K**
880	1000	✓	✓	✓	✓	✓	**NN3080**
-	-	✓	✓	✓	✓	✓	**NN3984**
-	-	✓	✓	✓	✓	✓	**NN3984 K**
840	990	✓	✓	✓	✓	✓	**NN3084 K**
840	990	✓	✓	✓	✓	✓	**NN3084**
-	-	✓	✓	✓	✓	✓	**NN3184**
-	-	✓	✓	✓	✓	✓	**NN3184 K**
800	940	✓	✓	✓	✓	✓	**NN3088 K**
800	940	✓	✓	✓	✓	✓	**NN3088**
-	-	✓	✓	✓	✓	✓	**NN4992**
-	-	✓	✓	✓	✓	✓	**NN4992 K**
750	890	✓	✓	✓	✓	✓	**NN3092 K**
750	890	✓	✓	✓	✓	✓	**NN3092**
540	650	✓	✓	✓	✓	✓	**NN3096 K**
540	650	✓	✓	✓	✓	✓	**NN3096**
-	-	✓	✓	✓	✓	✓	**NN3196**
-	-	✓	✓	✓	✓	✓	**NN3196 K**
-	-	✓	✓	✓	✓	✓	**NN30/500 K**
-	-	✓	✓	✓	✓	✓	**NN30/500**
-	-	✓	✓	✓	✓	✓	**NN49/560**
-	-	✓	✓	✓	✓	✓	**NN49/560 K**
-	-	✓	✓	✓	✓	✓	**NN30/600 K**
-	-	✓	✓	✓	✓	✓	**NN30/600**



* Other products also available

https://nppnovoteh.com

5. CYLINDRICAL ROLLER BEARINGS

5.8. Multi-row cylindrical roller bearings
- types - NNU, NNU..K



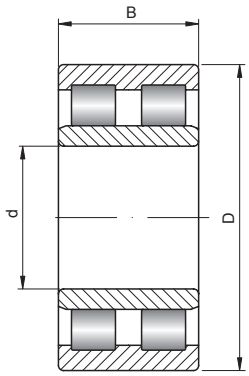

NNU..

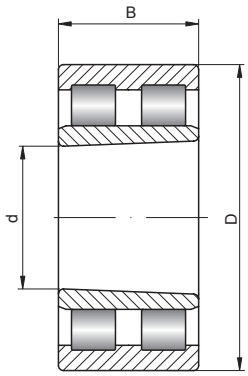

NNU.. K

60 – 130 mm

Shaft [mm]	Bearing No.	Series		Dimensions [mm]			Weight [kg]	Basic load ratings [kN]	
		SD	SB	d	D	B		dyn. C	stat. C_0
60	**NNU6012**	0	6	60	95	63	1,81	122	240
	NNU6012 V	0	6	60	95	63	1,86	189	425
65	**NNU6013**	0	6	65	100	63	1,93	127,5	258
	NNU6013 V	0	6	65	100	63	1,98	196	450
70	**NNU6014**	0	6	70	110	71	2,77	159,5	331
	NNU6014 V	0	6	70	110	71	2,83	244	570
75	**NNU6015**	0	6	75	115	71	2,89	168	360
	NNU6015 V	0	6	75	115	71	2,95	250	610
80	**NNU6016**	0	6	80	125	80	3,95	209	380
	NNU6016 V	0	6	80	125	80	4,03	312	760
85	**NNU6017**	0	6	85	130	80	4,16	212	460
	NNU6017 V	0	6	85	130	80	4,24	319	775
90	**NNU6018**	0	6	90	140	90	5,54	255	550
	NNU6018 V	0	6	90	140	90	5,65	358	950
95	**NNU6019**	0	6	95	145	90	5,79	265	560
	NNU6019 V	0	6	95	145	90	6,14	388	975
100	**NNU4920**	9	4	100	140	40	1.83	131	260
	NNU4920 K	9	4	100	140	40	1.75	131	260
	NNU4920 KV	9	4	100	140	40	1,78	192	434
	NNU4920 V	9	4	100	140	40	1,86	192	434
	NNU6020	0	6	100	150	90	6,04	269	610
	NNU6020 V	0	6	100	150	90	6,14	404	1020
105	**NNU4921**	9	4	105	145	40	1.91	133	268
	NNU4921 K	9	4	105	145	40	1.82	133	268
	NNU4921 KV	9	4	105	145	40	1,85	195	448
	NNU4921 V	9	4	105	145	40	1,94	195	448
	NNU6021	0	6	105	160	100	7,81	308	680
	NNU6021 V	0	6	105	160	100	7,96	458	1150
110	**NNU4922**	9	4	110	150	40	1.99	137	284
	NNU4922 K	9	4	110	150	40	1.9	137	284
	NNU4922 KV	9	4	110	150	40	1,93	201	474
	NNU4922 V	9	4	110	150	40	2,02	201	474
	NNU6022	0	6	110	170	109	9,86	356	790
	NNU6022 V	0	6	110	170	109	10,00	528	1320
120	**NNU4924**	9	4	120	165	45	2.75	183	360
	NNU4924 K	9	4	120	165	45	2.63	183	360
	NNU4924 KV	9	4	120	165	45	2,67	268	601
	NNU4924 V	9	4	120	165	45	2,79	268	601
	NNU6024	0	6	120	180	109	10,50	372	850
	NNU6024 V	0	6	120	180	109	10,70	555	1430
130	**NNU4926**	9	4	130	180	50	3.69	220	440
	NNU4926 K	9	4	130	180	50	3.52	220	440
	NNU4926 KV	9	4	130	180	50	3,57	322	735
	NNU4926 V	9	4	130	180	50	3,75	322	735

- warehouse - order - phone

Limiting speed [rpm]		Basic makes*					Bearing No.
grease	oil	-	M	TV	C2	C3	
-	-	✓	✓	✓	✓	✓	**NNU6012**
-	-	✓	✓	✓	✓	✓	**NNU6012 V**
-	-	✓	✓	✓	✓	✓	**NNU6013**
-	-	✓	✓	✓	✓	✓	**NNU6013 V**
-	-	✓	✓	✓	✓	✓	**NNU6014**
-	-	✓	✓	✓	✓	✓	**NNU6014 V**
-	-	✓	✓	✓	✓	✓	**NNU6015**
-	-	✓	✓	✓	✓	✓	**NNU6015 V**
-	-	✓	✓	✓	✓	✓	**NNU6016**
-	-	✓	✓	✓	✓	✓	**NNU6016 V**
-	-	✓	✓	✓	✓	✓	**NNU6017**
-	-	✓	✓	✓	✓	✓	**NNU6017 V**
-	-	✓	✓	✓	✓	✓	**NNU6018**
-	-	✓	✓	✓	✓	✓	**NNU6018 V**
-	-	✓	✓	✓	✓	✓	**NNU6019**
-	-	✓	✓	✓	✓	✓	**NNU6019 V**
4300	5100	◴	◴	✓	◴	◴	**NNU4920**
4300	5100	◴	◴	✓	◴	◴	**NNU4920 K**
-	-	◴	◴	✓	◴	◴	**NNU4920 KV**
-	-	◴	◴	✓	◴	◴	**NNU4920 V**
-	-	✓	✓	✓	✓	✓	**NNU6020**
-	-	✓	✓	✓	✓	✓	**NNU6020 V**
4100	4800	◴	◴	✓	◴	◴	**NNU4921**
4100	4800	◴	◴	✓	◴	◴	**NNU4921 K**
-	-	◴	◴	✓	◴	◴	**NNU4921 KV**
-	-	◴	◴	✓	◴	◴	**NNU4921 V**
-	-	✓	✓	✓	✓	✓	**NNU6021**
-	-	✓	✓	✓	✓	✓	**NNU6021 V**
3900	4600	◴	◴	✓	◴	◴	**NNU4922**
3900	4600	◴	◴	✓	◴	◴	**NNU4922 K**
-	-	◴	◴	✓	◴	◴	**NNU4922 KV**
-	-	◴	◴	✓	◴	◴	**NNU4922 V**
-	-	✓	✓	✓	✓	✓	**NNU6022**
-	-	✓	✓	✓	✓	✓	**NNU6022 V**
3600	4200	◴	◴	✓	◴	◴	**NNU4924**
3600	4200	◴	◴	✓	◴	◴	**NNU4924 K**
-	-	◴	◴	✓	◴	◴	**NNU4924 KV**
-	-	◴	◴	✓	◴	◴	**NNU4924 V**
-	-	✓	✓	✓	✓	✓	**NNU6024**
-	-	✓	✓	✓	✓	✓	**NNU6024 V**
3300	3900	◴	◴	✓	◴	◴	**NNU4926**
3300	3900	◴	◴	✓	◴	◴	**NNU4926 K**
-	-	◴	◴	✓	◴	◴	**NNU4926 KV**
-	-	◴	◴	✓	◴	◴	**NNU4926 V**

* Other products also available



https://nppnovoteh.com

5. CYLINDRICAL ROLLER BEARINGS

5.8. Multi-row cylindrical roller bearings
- types - NNU, NNU..K



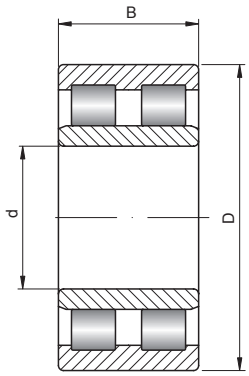

NNU..

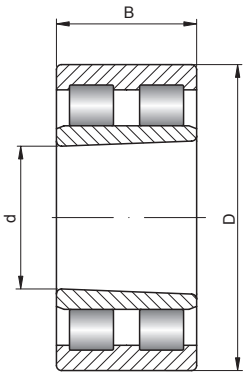

NNU.. K

130 – 220 mm

Shaft [mm]	Bearing No.	Series		Dimensions [mm]			Weight [kg]	Basic load ratings [kN]	
		SD	SB	d	D	B		dyn. C	stat. C_0
130 cont.	**NNU6026**	0	6	130	200	125	15,60	490	1100
	NNU6026 V	0	6	130	200	125	15,80	726	1870
140	**NNU4928**	9	4	140	190	50	3.94	227	470
	NNU4928 K	9	4	140	190	50	3.76	227	470
	NNU4928 KV	9	4	140	190	50	3,82	332	785
	NNU4928 V	9	4	140	190	50	4,00	332	785
	NNU6028	0	6	140	210	125	16,60	517	1210
	NNU6028 V	0	6	140	210	125	16,80	748	1990
150	**NNU4930**	9	4	150	210	60	6.18	345	690
	NNU4930 K	9	4	150	210	60	5.9	345	690
	NNU4930 KV	9	4	150	210	60	5,99	505	1153
	NNU4930 V	9	4	150	210	60	6,27	505	1153
	NNU6030	0	6	150	225	136	20,70	587	1400
	NNU6030 V	0	6	150	225	136	20,90	850	2290
160	**NNU4932**	9	4	160	220	60	6.53	355	740
	NNU4932 K	9	4	160	220	60	6.23	355	740
	NNU4932 KV	9	4	160	220	60	6,32	520	1236
	NNU4932 V	9	4	160	220	60	6,63	520	1236
	NNU6032	0	6	160	240	145	25,10	669	1610
	NNU6032 V	0	6	160	240	145	25,40	968	2630
170	**NNU4934**	9	4	170	230	60	6.87	360	765
	NNU4934 K	9	4	170	230	60	6.55	360	765
	NNU4934 KV	9	4	170	230	60	6,65	527	1278
	NNU4934 V	9	4	170	230	60	6,97	527	1278
	NNU6034	0	6	170	260	160	33,70	797	1900
	NNU6034 V	0	6	170	260	160	34,10	1150	3110
180	**NNU4936**	9	4	180	250	69	2	460	965
	NNU4936 K	9	4	180	250	69	9.9	460	965
	NNU4936 KV	9	4	180	250	69	10,05	674	1612
	NNU4936 V	9	4	180	250	69	2,03	674	1612
	NNU6036	0	6	180	280	180	44,80	968	2360
	NNU6036 V	0	6	180	280	180	45,40	1380	3790
190	**NNU4938**	9	4	190	260	69	10.4	475	1030
	NNU4938 K	9	4	190	260	69	9.94	475	1030
	NNU4938 KV	9	4	190	260	69	10,09	696	1720
	NNU4938 V	9	4	190	260	69	10,56	696	1720
	NNU6038	0	6	190	290	180	46,80	990	2450
	NNU6038 V	0	6	190	290	180	47,30	1440	3990
200	**NNU4940**	9	4	200	280	80	14.7	555	1180
	NNU4940 K	9	4	200	280	80	14	555	1180
	NNU4940 KV	9	4	200	280	80	14,21	813	1971
	NNU4940 V	9	4	200	280	80	14,92	813	1971
	NNU6040	0	6	200	310	200	61,00	1180	2890
	NNU6040 V	0	6	200	310	200	61,20	1670	4640
220	**NNU4944**	9	4	220	300	80	15.9	585	1300
	NNU4944 K	9	4	220	300	80	15.2	585	1300
	NNU4944 KV	9	4	220	300	80	15,43	857	2171
	NNU4944 V	9	4	220	300	80	16,14	857	2171

- warehouse - order - phone

Limiting speed [rpm]		Basic makes*					Bearing No.
grease	oil	-	M	TV	C2	C3	
-	-	●	●	●	●	●	**NNU6026**
-	-	●	●	●	●	●	**NNU6026 V**
3000	3600	◴	◴	●	◴	◴	**NNU4928**
3000	3600	◴	◴	●	◴	◴	**NNU4928 K**
-	-	◴	◴	●	◴	◴	**NNU4928 KV**
-	-	◴	◴	●	◴	◴	**NNU4928 V**
-	-	●	●	●	●	●	**NNU6028**
-	-	●	●	●	●	●	**NNU6028 V**
2800	3300	◴	◴	●	◴	◴	**NNU4930**
2800	3300	◴	◴	●	◴	◴	**NNU4930 K**
-	-	◴	◴	●	◴	◴	**NNU4930 KV**
-	-	◴	◴	●	◴	◴	**NNU4930 V**
-	-	●	●	●	●	●	**NNU6030**
-	-	●	●	●	●	●	**NNU6030 V**
2600	3100	◴	◴	●	◴	◴	**NNU4932**
2600	3100	◴	◴	●	◴	◴	**NNU4932 K**
-	-	◴	◴	●	◴	◴	**NNU4932 KV**
-	-	◴	◴	●	◴	◴	**NNU4932 V**
-	-	●	●	●	●	●	**NNU6032**
-	-	●	●	●	●	●	**NNU6032 V**
2500	2900	◴	◴	●	◴	◴	**NNU4934**
2500	2900	◴	◴	●	◴	◴	**NNU4934 K**
-	-	◴	◴	●	◴	◴	**NNU4934 KV**
-	-	◴	◴	●	◴	◴	**NNU4934 V**
-	-	●	●	●	●	●	**NNU6034**
-	-	●	●	●	●	●	**NNU6034 V**
2300	2700	◴	◴	●	◴	◴	**NNU4936**
2300	2700	◴	◴	●	◴	◴	**NNU4936 K**
-	-	◴	◴	●	◴	◴	**NNU4936 KV**
-	-	◴	◴	●	◴	◴	**NNU4936 V**
-	-	●	●	●	●	●	**NNU6036**
-	-	●	●	●	●	●	**NNU6036 V**
2200	2600	◴	◴	●	◴	◴	**NNU4938**
2200	2600	◴	◴	●	◴	◴	**NNU4938 K**
-	-	◴	◴	●	◴	◴	**NNU4938 KV**
-	-	◴	◴	●	◴	◴	**NNU4938 V**
-	-	●	●	●	●	●	**NNU6038**
-	-	●	●	●	●	●	**NNU6038 V**
2100	2400	◴	◴	●	◴	◴	**NNU4940**
2100	2400	◴	◴	●	◴	◴	**NNU4940 K**
-	-	◴	◴	●	◴	◴	**NNU4940 KV**
-	-	◴	◴	●	◴	◴	**NNU4940 V**
-	-	●	●	●	●	●	**NNU6040**
-	-	●	●	●	●	●	**NNU6040 V**
1900	2200	●	●	●	●	●	**NNU4944**
1900	2200	●	●	●	●	●	**NNU4944 K**
-	-	●	●	●	●	●	**NNU4944 KV**
-	-	●	●	●	●	●	**NNU4944 V**

* Other products also available



https://nppnovoteh.com

5. CYLINDRICAL ROLLER BEARINGS

5.8. Multi-row cylindrical roller bearings
- types - NNU, NNU..K



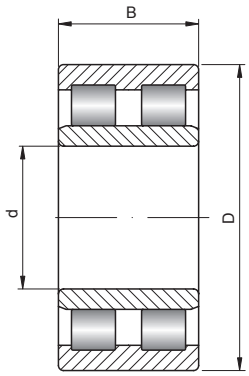

NNU..

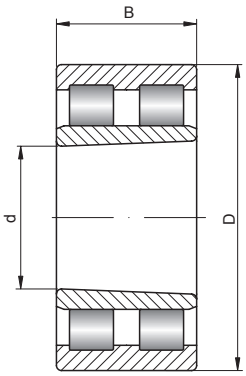

NNU.. K

220 – 400 mm

Shaft [mm]	Bearing No.	Series		Dimensions [mm]			Weight [kg]	Basic load ratings [kN]	
		SD	SB	d	D	B		dyn. C	stat. C_0
220 cont.	**NNU6044**	0	6	220	340	218	79,90	1380	3480
	NNU6044 V	0	6	220	340	218	80,40	1980	5570
240	**NNU4948**	9	4	240	320	80	17.2	610	1410
	NNU4948 K	9	4	240	320	80	16.4	610	1410
	NNU4948 KV	9	4	240	320	80	16,65	893	2355
	NNU4948 V	9	4	240	320	80	17,46	893	2355
	NNU6048	0	6	240	360	218	85,40	1430	3720
	NNU6048 V	0	6	240	360	218	86,10	2090	6070
260	**NNU4952**	9	4	260	360	100	29.6	900	2070
	NNU4952 K	9	4	260	360	100	28.3	900	2070
	NNU4952 KV	9	4	260	360	100	28,73	1318	3458
	NNU4952 V	9	4	260	360	100	30,05	1318	3458
	NNU6052	0	6	260	400	250	126,00	1850	4760
	NNU6052 V	0	6	260	400	250	127,00	2630	7580
280	**NNU4956**	9	4	280	380	100	31.6	925	2200
	NNU4956 K	9	4	280	380	100	30.2	925	2200
	NNU4956 KV	9	4	280	380	100	30,66	1355	3675
	NNU4956 V	9	4	280	380	100	32,08	1355	3675
	NNU6056	0	6	280	420	250	134,00	1920	5100
	NNU6056 V	0	6	280	420	250	134,00	2730	8000
300	**NNU4960**	9	4	300	420	118	48.6	1200	2800
	NNU4960 K	9	4	300	420	118	46.4	1200	2800
	NNU4960 KV	9	4	300	420	118	47,10	1757	4677
	NNU4960 V	9	4	300	420	118	49,33	1757	4677
	NNU6060	0	6	300	460	290	193,00	2390	6320
	NNU6060 V	0	6	300	460	290	193,00	3400	10000
320	**NNU4964**	9	4	320	440	118	51.4	1240	2970
	NNU4964 K	9	4	320	440	118	49.1	1240	2970
	NNU4964 KV	9	4	320	440	118	49,84	1816	4961
	NNU4964 V	9	4	320	440	118	52,18	1816	4961
	NNU6064	0	6	320	480	290	203,00	2500	6730
	NNU6064 V	0	6	320	480	290	203,00	3540	10500
340	**NNU4968**	9	4	340	460	118	54.2	1280	3150
	NNU4968 K	9	4	340	460	118	51.7	1280	3150
	NNU4968 KV	9	4	340	460	118	52,48	1874	5261
	NNU4968 V	9	4	340	460	118	55,02	1874	5261
360	**NNU4972**	9	4	360	480	118	57,00	1290	3250
	NNU4972 K	9	4	360	480	118	54.4	1290	3250
	NNU4972 KV	9	4	360	480	118	55,22	1889	5428
	NNU4972 V	9	4	360	480	118	57,86	1889	5428
380	**NNU4976**	9	4	380	520	140	84.5	1630	4050
	NNU4976 K	9	4	380	520	140	80.6	1630	4050
	NNU4976 KV	9	4	380	520	140	81,82	2387	6765
	NNU4976 V	9	4	380	520	140	85,78	2387	6765
400	**NNU4980**	9	4	400	540	140	88.2	1690	4300
	NNU4980 K	9	4	400	540	140	84.1	1690	4300
	NNU4980 KV	9	4	400	540	140	85,37	2475	7182

- warehouse - order - phone

Limiting speed [rpm]		Basic makes*					Bearing No.
grease	oil	-	M	TV	C2	C3	
-	-	✓	✓	✓	✓	✓	**NNU6044**
-	-	✓	✓	✓	✓	✓	**NNU6044 V**
1700	2000	✓	✓	✓	✓	✓	**NNU4948**
1700	2000	✓	✓	✓	✓	✓	**NNU4948 K**
-	-	✓	✓	✓	✓	✓	**NNU4948 KV**
-	-	✓	✓	✓	✓	✓	**NNU4948 V**
-	-	✓	✓	✓	✓	✓	**NNU6048**
-	-	✓	✓	✓	✓	✓	**NNU6048 V**
1600	1800	✓	✓	✓	✓	✓	**NNU4952**
1600	1800	✓	✓	✓	✓	✓	**NNU4952 K**
-	-	✓	✓	✓	✓	✓	**NNU4952 KV**
-	-	✓	✓	✓	✓	✓	**NNU4952 V**
-	-	✓	✓	✓	✓	✓	**NNU6052**
-	-	✓	✓	✓	✓	✓	**NNU6052 V**
1400	1700	✓	✓	✓	✓	✓	**NNU4956**
1400	1700	✓	✓	✓	✓	✓	**NNU4956 K**
-	-	✓	✓	✓	✓	✓	**NNU4956 KV**
-	-	✓	✓	✓	✓	✓	**NNU4956 V**
-	-	✓	✓	✓	✓	✓	**NNU6056**
-	-	✓	✓	✓	✓	✓	**NNU6056 V**
1300	1500	✓	✓	✓	✓	✓	**NNU4960**
1300	1500	✓	✓	✓	✓	✓	**NNU4960 K**
-	-	✓	✓	✓	✓	✓	**NNU4960 KV**
-	-	✓	✓	✓	✓	✓	**NNU4960 V**
-	-	✓	✓	✓	✓	✓	**NNU6060**
-	-	✓	✓	✓	✓	✓	**NNU6060 V**
1200	1400	✓	✓	✓	✓	✓	**NNU4964**
1200	1400	✓	✓	✓	✓	✓	**NNU4964 K**
-	-	✓	✓	✓	✓	✓	**NNU4964 KV**
-	-	✓	✓	✓	✓	✓	**NNU4964 V**
-	-	✓	✓	✓	✓	✓	**NNU6064**
-	-	✓	✓	✓	✓	✓	**NNU6064 V**
1100	1300	✓	✓	✓	✓	✓	**NNU4968**
1100	1300	✓	✓	✓	✓	✓	**NNU4968 K**
-	-	✓	✓	✓	✓	✓	**NNU4968 KV**
-	-	✓	✓	✓	✓	✓	**NNU4968 V**
1100	1300	✓	✓	✓	✓	✓	**NNU4972**
1100	1300	✓	✓	✓	✓	✓	**NNU4972 K**
-	-	✓	✓	✓	✓	✓	**NNU4972 KV**
-	-	✓	✓	✓	✓	✓	**NNU4972 V**
1000	1200	✓	✓	✓	✓	✓	**NNU4976**
1000	1200	✓	✓	✓	✓	✓	**NNU4976 K**
-	-	✓	✓	✓	✓	✓	**NNU4976 KV**
-	-	✓	✓	✓	✓	✓	**NNU4976 V**
940	1100	✓	✓	✓	✓	✓	**NNU4980**
940	1100	✓	✓	✓	✓	✓	**NNU4980 K**
-	-	✓	✓	✓	✓	✓	**NNU4980 KV**

* Other products also available



https://nppnovoteh.com

5. CYLINDRICAL ROLLER BEARINGS

5.8. Multi-row cylindrical roller bearings
- types - NNU, NNU..K



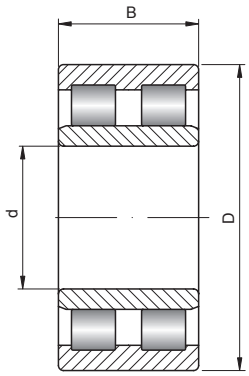

NNU..

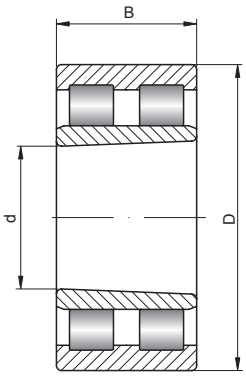

NNU.. K

400 – 500 mm

Shaft [mm]	Bearing No.	Series		Dimensions [mm]			Weight [kg]	Basic load ratings [kN]	
		SD	SB	d	D	B		dyn. C	stat. C_0
400 cont.	**NNU4980 V**	9	4	400	540	140	89,53	2475	7182
420	**NNU4984**	9	4	420	560	140	92,00	1740	4500
	NNU4984 K	9	4	420	560	140	87.7	1740	4500
	NNU4984 KV	9	4	420	560	140	89,03	2548	7516
	NNU4984 V	9	4	420	560	140	93,39	2548	7516
	NNU4184	1	4	420	700	280	406,99	6700	9800
440	**NNU4988**	9	4	440	600	160	127,00	2150	5550
	NNU4988 K	9	4	440	600	160	121,00	2150	5550
	NNU4988 KV	9	4	440	600	160	122,83	3148	9270
	NNU4988 V	9	4	440	600	160	128,92	3148	9270
460	**NNU4992**	9	4	460	620	160	132,00	2220	5850
	NNU4992 K	9	4	460	620	160	126,00	2220	5850
	NNU4992 KV	9	4	460	620	160	127,90	3251	9771
	NNU4992 V	9	4	460	620	160	133,99	3251	9771
480	**NNU4996**	9	4	480	650	170	156,00	2280	5900
	NNU4996 K	9	4	480	650	170	149,00	2280	5900
	NNU4996 KV	9	4	480	650	170	151,25	3339	9855
	NNU4996 V	9	4	480	650	170	158,36	3339	9855
500	**NNU49/500**	9	4	500	670	170	162,00	2360	6200
	NNU49/500 K	9	4	500	670	170	162,00	2360	6200
	NNU49/500 KV	9	4	500	670	170	164,45	3456	10356
	NNU49/500 V	9	4	500	670	170	164,45	3456	10356

- warehouse - order - phone

Limiting speed [rpm]		Basic makes*					Bearing No.
grease	oil	-	M	TV	C2	C3	
-	-	✓	✓	✓	✓	✓	**NNU4980 V**
900	1100	✓	✓	✓	✓	✓	**NNU4984**
900	1100	✓	✓	✓	✓	✓	**NNU4984 K**
-	-	✓	✓	✓	✓	✓	**NNU4984 KV**
-	-	✓	✓	✓	✓	✓	**NNU4984 V**
-	-	✓	✓	✓	✓	✓	**NNU4184**
850	1000	✓	✓	✓	✓	✓	**NNU4988**
850	1000	✓	✓	✓	✓	✓	**NNU4988 K**
-	-	✓	✓	✓	✓	✓	**NNU4988 KV**
-	-	✓	✓	✓	✓	✓	**NNU4988 V**
800	950	✓	✓	✓	✓	✓	**NNU4992**
800	950	✓	✓	✓	✓	✓	**NNU4992 K**
-	-	✓	✓	✓	✓	✓	**NNU4992 KV**
-	-	✓	✓	✓	✓	✓	**NNU4992 V**
770	910	✓	✓	✓	✓	✓	**NNU4996**
770	910	✓	✓	✓	✓	✓	**NNU4996 K**
-	-	✓	✓	✓	✓	✓	**NNU4996 KV**
-	-	✓	✓	✓	✓	✓	**NNU4996 V**
730	860	✓	✓	✓	✓	✓	**NNU49/500**
730	860	✓	✓	✓	✓	✓	**NNU49/500 K**
-	-	✓	✓	✓	✓	✓	**NNU49/500 KV**
-	-	✓	✓	✓	✓	✓	**NNU49/500 V**

* Other products also available



https://nppnovoteh.com

5. CYLINDRICAL ROLLER BEARINGS

5.9. Cageless cylindrical roller bearings
- types - NCF, NJF, NNC, NNCF, NNCL, NNF



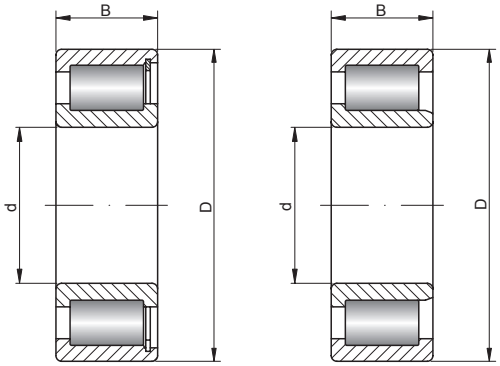

20 – 60 mm

Shaft [mm]	Bearing No.	Series		Dimensions [mm]			Weight [kg]	Basic load ratings [kN]	
		SD	SB	d	D	B		dyn. C	stat. C_0
20	**NCF3004 V**	0	3	20	42	16	0,1100	27,5	26,5
	NNCF5004 V	0	5	20	42	30	0,2000	47,5	53
	NNF5004 V	0	5	20	42	30	0,2000	40,5	49
	NCF2204 V	2	2	20	47	18	0,1600	41	37,5
25	**NCF3005 V**	0	3	25	47	16	0,1200	31,5	32,5
	NNCF5005 V	0	5	25	47	30	0,2300	54	65
	NNF5005 V	0	5	25	47	30	0,2400	44,5	58
	NCF2205 V	2	2	25	52	18	0,1800	46	45
	NJF2305 V	3	2	25	62	24	0,3700	65	60
30	**NCF3006 V**	0	3	30	55	19	0,2000	40,5	43
	NNCF5006 V	0	5	30	55	34	0,3500	70	86
	NNF5006 V	0	5	30	55	34	0,3700	50	67
	NCF2206 V	2	2	30	62	20	0,3000	63	65
	NJF2306 V	3	2	30	72	27	0,5600	89	88
35	**NCF3007 V**	0	3	35	62	20	0,2600	49,5	55
	NNCF5007 V	0	5	35	62	36	0,4600	85	109
	NNF5007 V	0	5	35	62	36	0,4800	63	88
	NCF2207 V	2	2	35	72	23	0,4400	79	79
	NJF2307 V	3	2	35	80	31	0,7400	113	112
40	**NCF3008 V**	0	3	40	68	21	0,3100	59	68
	NNCF5008 V	0	5	40	68	38	0,5600	101	136
	NNF5008 V	0	5	40	68	38	0,5600	76	103
	NCF2208 V	2	2	40	80	23	0,5500	87	83
	NJF2308 V	3	2	40	90	33	1,0100	152	156
45	**NCF3009 V**	0	3	45	75	23	0,4000	63	76
	NNCF5009 V	0	5	45	75	40	0,7100	108	151
	NNF5009 V	0	5	45	75	40	0,7000	92	130
	NCF2209 V	2	2	45	85	23	0,5900	90	99
	NJF2309 V	3	2	45	100	36	1,3700	162	172
50	**NCF3010 V**	0	3	50	80	23	0,4300	79	96
	NNCF5010 V	0	5	50	80	40	0,7600	135	191
	NNF5010 V	0	5	50	80	40	0,7600	97	142
	NCF2210 V	2	2	50	90	23	0,6400	97	113
	NJF2310 V	3	2	50	110	40	1,8100	208	219
55	**NCF3011 V**	0	3	55	90	26	0,6400	107	138
	NNCF5011 V	0	5	55	90	46	1,1600	184	275
	NNF5011 V	0	5	55	90	46	1,1800	115	175
	NCF2211 V	2	2	55	100	25	0,8700	125	150
	NJF2311 V	3	2	55	120	43	2,2800	242	255
60	**NCF2912 V**	9	2	60	85	16	0,2900	57	78
	NNC4912 V	9	4	60	85	25	0,4900	71	125
	NNCL4912 V	9	4	60	85	25	0,4700	71	125
	NCF3012 V	0	3	60	95	26	0,6900	110	145
	NNCF5012 V	0	5	60	95	46	1,2400	189	290
	NNF5012 V	0	5	60	95	46	1,2600	120	189
	NCF2212 V	2	2	60	110	28	1,1800	152	180
	NJF2312 V	3	2	60	130	46	2,8800	260	280

- warehouse - order - phone

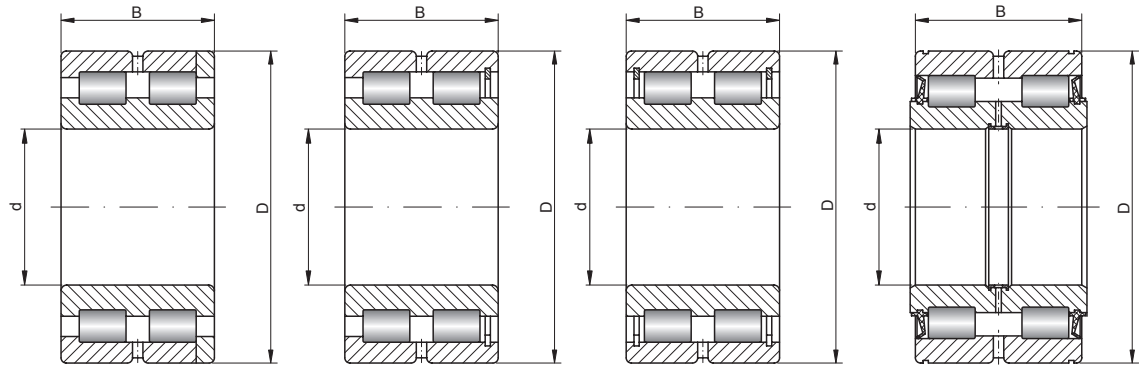

NNC.. NNCF.. NNCL.. NNF..

Rotational speed [rpm]		Equivalent	Basic makes*			Bearing No.
reference	limiting		-	MSP	MUP	
9000	10000	SL183004				**NCF3004 V**
9000	10000	SL185004				**NNCF5004 V**
2400	4000	SL045004				**NNF5004 V**
8000	9500	SL182204				**NCF2204 V**
7000	9000	SL183005				**NCF3005 V**
7000	9000	SL185005				**NNCF5005 V**
2160	3600	SL045005				**NNF5005 V**
6500	8500	SL182205				**NCF2205 V**
5500	7500	SL192305				**NJF2305 V**
6500	7500	SL183006				**NCF3006 V**
6500	7500	SL185006				**NNCF5006 V**
1800	3000	SL045006				**NNF5006 V**
5500	7000	SL182206				**NCF2206 V**
4900	6500	SL192306				**NJF2306 V**
6000	6500	SL183007				**NCF3007 V**
5500	6500	SL185007				**NNCF5007 V**
1560	2600	SL045007				**NNF5007 V**
5000	6000	SL182207				**NCF2207 V**
4300	5500	SL192307				**NJF2307 V**
5000	6000	SL183008				**NCF3008 V**
5000	6000	SL185008				**NNCF5008 V**
1440	2400	SL045008				**NNF5008 V**
4400	5500	SL182208				**NCF2208 V**
3600	5000	SL192308				**NJF2308 V**
5000	5500	SL183009				**NCF3009 V**
4700	5500	SL185009				**NNCF5009 V**
1320	2200	SL045009				**NNF5009 V**
4200	5000	SL182209				**NCF2209 V**
3700	4500	SL192309				**NJF2309 V**
4500	5000	SL183010				**NCF3010 V**
4200	5000	SL185010				**NNCF5010 V**
1200	2000	SL045010				**NNF5010 V**
3600	4600	SL182210				**NCF2210 V**
3400	4100	SL192310				**NJF2310 V**
3800	4500	SL183011				**NCF3011 V**
3600	4500	SL185011				**NNCF5011 V**
1080	1800	SL045011				**NNF5011 V**
3300	4200	SL182211				**NCF2211 V**
3100	3700	SL192311				**NJF2311 V**
3500	4500	SL182912				**NCF2912 V**
3200	4500	SL014912				**NNC4912 V**
3200	4500	SL024912				**NNCL4912 V**
3600	4200	SL183012				**NCF3012 V**
3400	4200	SL185012				**NNCF5012 V**
1020	1700	SL045012				**NNF5012 V**
3100	3800	SL182212				**NCF2212 V**
2900	3400	SL192312				**NJF2312 V**

https://nppnovoteh.com

5. CYLINDRICAL ROLLER BEARINGS

5.9. Cageless cylindrical roller bearings
- types - NCF, NJF, NNC, NNCF, NNCL, NNF



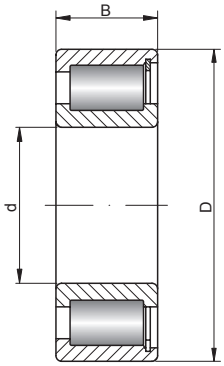

NCF..

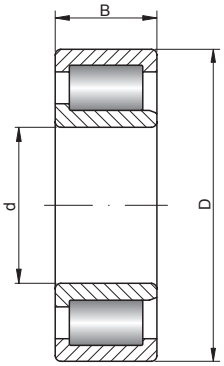

NJF..

65 – 100 mm

Shaft [mm]	Bearing No.	Series		Dimensions [mm]			Weight [kg]	Basic load ratings [kN]	
		SD	SB	d	D	B		dyn. C	stat. C_0
65	**NCF2913 V**	9	2	65	90	16	0,3100	60	86
	NCF3013 V	0	3	65	100	26	0,7300	116	159
	NNCF5013 V	0	5	65	100	46	1,3200	199	320
	NNF5013 V	0	5	65	100	46	1,3300	125	203
	NCF2213 V	2	2	65	120	31	1,5700	178	214
	NJF2313 V	3	2	65	140	48	3,5200	315	355
70	**NCF2914 V**	9	2	70	100	19	0,4900	79	114
	NNC4914 V	9	4	70	100	30	0,7800	108	189
	NNCL4914 V	9	4	70	100	30	0,7500	108	189
	NCF3014 V	0	3	70	110	30	1,0200	137	176
	NNCF5014 V	0	5	70	110	54	1,8500	235	355
	NNF5014 V	0	5	70	110	54	1,8700	168	265
	NCF2214 V	2	2	70	125	31	1,6600	184	227
	NJF2314 V	3	2	70	150	51	4,3300	345	390
75	**NCF2915 V**	9	2	75	105	19	0,5200	81	121
	NCF3015 V	0	3	75	115	30	1,0600	145	194
	NNCF5015 V	0	5	75	115	54	1,9300	248	390
	NNF5015 V	0	5	75	115	54	1,9600	194	300
	NCF2215 V	2	2	75	130	31	1,7500	190	241
	NJF2315 V	3	2	75	160	55	5,3000	410	475
80	**NCF2916 V**	9	2	80	110	19	0,5500	84	129
	NNC4916 V	9	4	80	110	30	0,8800	115	211
	NNCL4916 V	9	4	80	110	30	0,8500	115	211
	NCF3016 V	0	3	80	125	34	1,4300	173	225
	NNCF5016 V	0	5	80	125	60	2,5900	295	450
	NNF5016 V	0	5	80	125	60	2,7100	203	325
	NCF2216 V	2	2	80	140	33	2,1500	226	285
	NJF2316 V	3	2	80	170	58	6,3200	480	560
85	**NCF2917 V**	9	2	85	120	22	0,8100	105	162
	NCF3017 V	0	3	85	130	34	1,5100	178	237
	NNCF5017 V	0	5	85	130	60	2,7200	305	475
	NNF5017 V	0	5	85	130	60	2,8300	211	350
	NCF2217 V	2	2	85	150	36	2,7400	255	325
	NJF2317 V	3	2	85	180	60	7,3400	510	620
90	**NCF2918 V**	9	2	90	125	22	0,8400	109	172
	NNC4918 V	9	4	90	125	35	1,3500	155	295
	NNCL4918 V	9	4	90	125	35	1,3000	155	295
	NCF3018 V	0	3	90	140	37	1,9700	208	280
	NNCF5018 V	0	5	90	140	67	3,6200	355	560
	NNF5018 V	0	5	90	140	67	3,7100	305	510
	NCF2218 V	2	2	90	160	40	3,4800	290	370
	NJF2318 V	3	2	90	190	64	8,8300	560	660
95	**NCF2919 V**	9	2	95	130	22	0,8600	118	179
	NNF5019 V	0	5	95	145	67	3,8800	315	530
	NCF2219 V	2	2	95	170	43	4,1700	340	435
	NJF2319 V	3	2	95	200	67	10,2000	580	720
100	**NCF2920 V**	9	2	100	140	24	1,1400	136	206
	NNC4920 V	9	4	100	140	40	1,9500	196	380
	NNCL4920 V	9	4	100	140	40	1,9000	196	380

- warehouse - order - phone

https://nppnovoteh.com

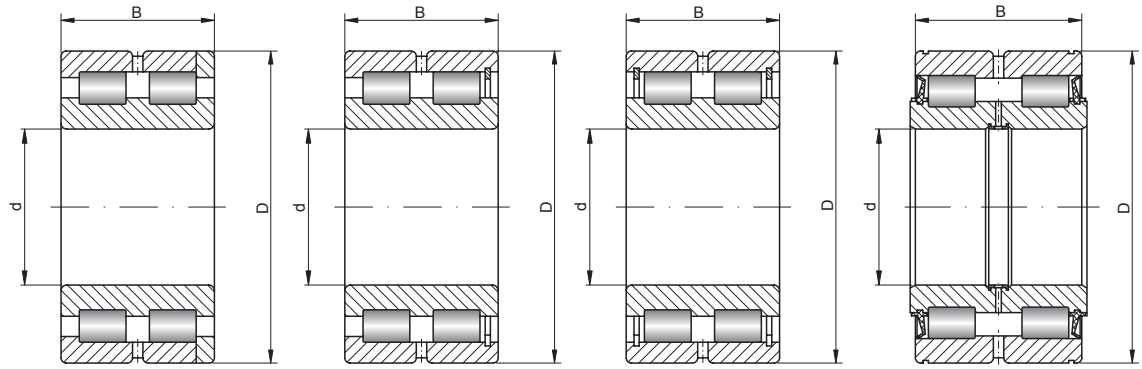

NNC.. NNCF.. NNCL.. NNF..

Rotational speed [rpm]		Equivalent	Basic makes*			Bearing No.
reference	limiting		-	MSP	MUP	
3100	4200	SL182913				**NCF2913 V**
3300	3900	SL183013				**NCF3013 V**
3100	3900	SL185013				**NNCF5013 V**
960	1600	SL045013				**NNF5013 V**
3000	3500	SL182213				**NCF2213 V**
2500	3200	SL192313				**NJF2313 V**
3100	3800	SL182914				**NCF2914 V**
2800	3800	SL014914				**NNC4914 V**
2800	3800	SL024914				**NNCL4914 V**
3400	3600	SL183014				**NCF3014 V**
3100	3600	SL185014				**NNCF5014 V**
840	1400	SL045014				**NNF5014 V**
2800	3300	SL182214				**NCF2214 V**
2400	2900	SL192314				**NJF2314 V**
2900	3600	SL182915				**NCF2915 V**
3000	3400	SL183015				**NCF3015 V**
2700	3400	SL185015				**NNCF5015 V**
840	1400	SL045015				**NNF5015 V**
2700	3200	SL182215				**NCF2215 V**
2100	2800	SL192315				**NJF2315 V**
2700	3400	SL182916				**NCF2916 V**
2500	3400	SL014916				**NNC4916 V**
2500	3400	SL024916				**NNCL4916 V**
3000	3200	SL183016				**NCF3016 V**
2500	3200	SL185016				**NNCF5016 V**
780	1300	SL045016				**NNF5016 V**
2500	2900	SL182216				**NCF2216 V**
1900	2600	SL192316				**NJF2316 V**
2700	3200	SL182917				**NCF2917 V**
2800	3000	SL183017				**NCF3017 V**
2400	3000	SL185017				**NNCF5017 V**
720	1200	SL045017				**NNF5017 V**
2400	2800	SL182217				**NCF2217 V**
1700	2400	SL192317				**NJF2317 V**
2500	3000	SL182918				**NCF2918 V**
2300	3000	SL014918				**NNC4918 V**
2300	3000	SL024918				**NNCL4918 V**
2700	2800	SL183018				**NCF3018 V**
2200	2800	SL185018				**NNCF5018 V**
660	1100	SL045018				**NNF5018 V**
2100	2600	SL182218				**NCF2218 V**
1800	2300	SL192318				**NJF2318 V**
2400	2900	SL182919				**NCF2919 V**
660	1100	SL045019				**NNF5019 V**
2000	2400	SL182219				**NCF2219 V**
1700	2200	SL192319				**NJF2319 V**
2300	2700	SL182920				**NCF2920 V**
2000	2700	SL014920				**NNC4920 V**
2000	2700	SL024920				**NNCL4920 V**

https://nppnovoteh.com

5. CYLINDRICAL ROLLER BEARINGS

5.9. Cageless cylindrical roller bearings
- types - NCF, NJF, NNC, NNCF, NNCL, NNF



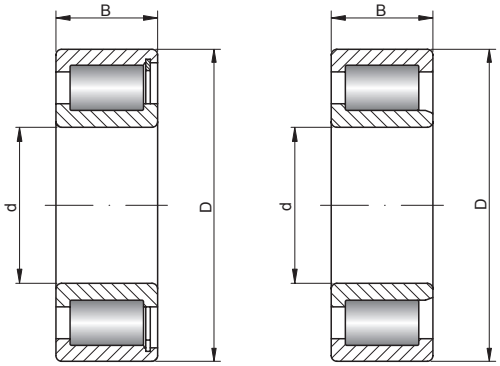

100 – 160 mm

Shaft [mm]	Bearing No.	Series		Dimensions [mm]			Weight [kg]	Basic load ratings [kN]	
		SD	SB	d	D	B		dyn. C	stat. C_0
100 cont.	**NCF3020 V**	0	3	100	150	37	2,1500	219	310
	NNCF5020 V	0	5	100	150	67	3,9400	375	620
	NNF5020 V	0	5	100	150	67	3,9500	330	550
	NCF2220 V	2	2	100	180	46	5,1300	395	520
	NJF2320 V	3	2	100	215	73	13,0000	710	860
110	**NCF2922 V**	9	2	110	150	24	1,2300	140	220
	NNC4922 V	9	4	110	150	40	2,1500	204	410
	NNCL4922 V	9	4	110	150	40	2,1000	204	410
	NCF3022 V	0	3	110	170	45	3,5000	285	395
	NNCF5022 V	0	5	110	170	80	6,3200	490	790
	NNF5022 V	0	5	110	170	80	6,5700	395	680
	NCF2222 V	2	2	110	200	53	7,2400	455	590
	NJF2322 V	3	2	110	240	80	17,0000	850	980
120	**NCF2924 V**	9	2	120	165	27	1,7300	180	295
	NNC4924 V	9	4	120	165	45	2,9500	228	455
	NNCL4924 V	9	4	120	165	45	2,8500	228	455
	NCF3024 V	0	3	120	180	46	3,8000	300	435
	NNCF5024 V	0	5	120	180	80	6,7700	520	870
	NNF5024 V	0	5	120	180	80	7,0400	410	740
	NCF2224 V	2	2	120	215	58	9,0800	540	730
	NJF2324 V	3	2	120	260	86	22,3000	1000	1240
130	**NCF2926 V**	9	2	130	180	30	2,3300	214	355
	NNC4926 V	9	4	130	180	50	3,9500	265	530
	NNCL4926 V	9	4	130	180	50	3,8000	265	530
	NNF5026 XV	0	5	130	190	80	7,5000	430	790
	NCF3026 V	0	3	130	200	52	5,6500	435	620
	NNCF5026 V	0	5	130	200	95	10,2000	740	1230
	NNF5026 V	0	5	130	200	95	10,5000	540	960
	NCF2226 V	2	2	130	230	64	11,2500	630	860
140	**NCF2928 V**	9	2	140	190	30	2,4200	232	385
	NNC4928 V	9	4	140	190	50	4,2000	275	570
	NNCL4928 V	9	4	140	190	50	4,1000	275	570
	NNF5028 XV	0	5	140	200	80	8,0000	445	840
	NCF3028 V	0	3	140	210	53	6,0400	455	680
	NNCF5028 V	0	5	140	210	95	11,1000	780	1360
	NNF5028 V	0	5	140	210	95	11,1000	610	1100
	NCF2228 V	2	2	140	250	68	14,4700	720	1020
150	**NNC4830 V**	8	4	150	190	40	2,9000	237	550
	NNCL4830 V	8	4	150	190	40	2,8000	237	550
	NCF2930 V	9	2	150	210	36	3,7700	305	490
	NNC4930 V	9	4	150	210	60	6,6500	415	840
	NNCL4930 V	9	4	150	210	60	6,4500	415	840
	NNF5030 XV	0	5	150	210	80	8,4000	465	920
	NCF3030 V	0	3	150	225	56	7,3300	480	710
	NNCF5030 V	0	5	150	225	100	13,3000	820	1420
	NNF5030 V	0	5	150	225	100	13,3000	710	1260
	NCF2230 V	2	2	150	270	73	18,4300	830	1180
160	**NNC4832 V**	8	4	160	200	40	3,1000	243	580
	NNCL4832 V	8	4	160	200	40	3,0000	243	580
	NCF2932 V	9	2	160	220	36	4,0000	320	520

- warehouse - order - phone

https://nppnovoteh.com

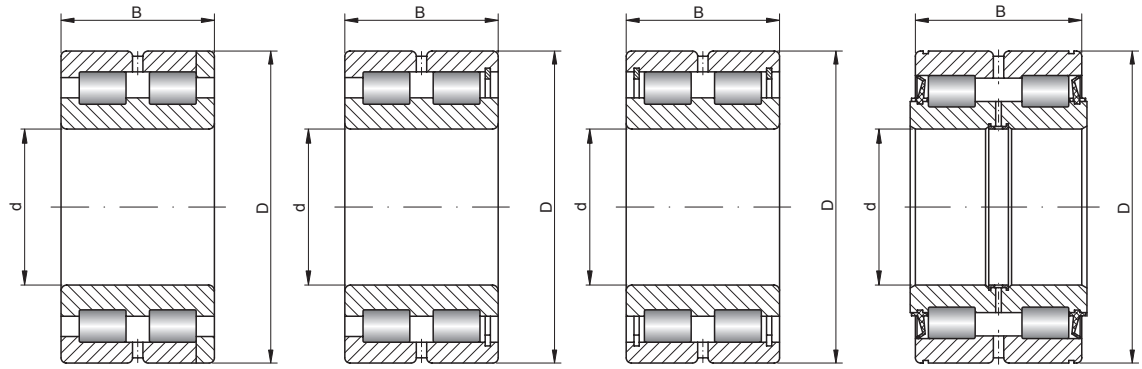

NNC.. NNCF.. NNCL.. NNF..

Rotational speed [rpm]		Equivalent	Basic makes*			Bearing No.
reference	limiting		-	MSP	MUP	
2400	2600	SL183020				**NCF3020 V**
2000	2600	SL185020				**NNCF5020 V**
600	1000	SL045020				**NNF5020 V**
1800	2300	SL182220				**NCF2220 V**
1500	2100	SL192320				**NJF2320 V**
2100	2500	SL182922				**NCF2922 V**
1800	2500	SL014922				**NNC4922 V**
1800	2500	SL024922				**NNCL4922 V**
2200	2300	SL183022				**NCF3022 V**
1800	2300	SL185022				**NNCF5022 V**
540	900	SL045022				**NNF5022 V**
1800	2100	SL182222				**NCF2222 V**
1300	1900	SL192322				**NJF2322 V**
1900	2300	SL182924				**NCF2924 V**
1700	2300	SL014924				**NNC4924 V**
1700	2300	SL024924				**NNCL4924 V**
1900	2200	SL183024				**NCF3024 V**
1600	2200	SL185024				**NNCF5024 V**
540	900	SL045024				**NNF5024 V**
1500	1900	SL182224				**NCF2224 V**
1200	1700	SL192324				**NJF2324 V**
1800	2100	SL182926				**NCF2926 V**
1500	2100	SL014926				**NNC4926 V**
1500	2100	SL024926				**NNCL4926 V**
480	800	SL04130				**NNF5026 XV**
1700	2000	SL183026				**NCF3026 V**
1400	2000	SL185026				**NNCF5026 V**
480	800	SL045026				**NNF5026 V**
1400	1800	SL182226				**NCF2226 V**
1600	2000	SL182928				**NCF2928 V**
1400	2000	SL014928				**NNC4928 V**
1400	2000	SL024928				**NNCL4928 V**
450	750	SL04140				**NNF5028 XV**
1500	1900	SL183028				**NCF3028 V**
1200	1900	SL185028				**NNCF5028 V**
450	750	SL045028				**NNF5028 V**
1300	1700	SL182228				**NCF2228 V**
1300	1900	SL014830				**NNC4830 V**
1300	1900	SL024830				**NNCL4830 V**
1500	1800	SL182930				**NCF2930 V**
1200	1800	SL014930				**NNC4930 V**
1200	1800	SL024930				**NNCL4930 V**
420	700	SL04150				**NNF5030 XV**
1500	1700	SL183030				**NCF3030 V**
1200	1700	SL185030				**NNCF5030 V**
420	700	SL045030				**NNF5030 V**
1200	1500	SL182230				**NCF2230 V**
1300	1800	SL014832				**NNC4832 V**
1300	1800	SL024832				**NNCL4832 V**
1300	1700	SL182932				**NCF2932 V**

https://nppnovoteh.com

5. CYLINDRICAL ROLLER BEARINGS

5.9. Cageless cylindrical roller bearings
- types - NCF, NJF, NNC, NNCF, NNCL, NNF



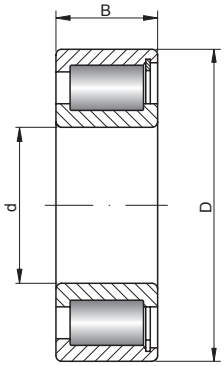

NCF..

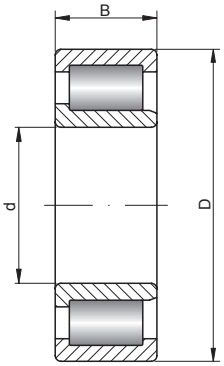

NJF..

160 – 220 mm

Shaft [mm]	Bearing No.	Series		Dimensions [mm]			Weight [kg]	Basic load ratings [kN]	
		SD	SB	d	D	B		dyn. C	stat. C_0
160 cont.	**NNC4932 V**	9	4	160	220	60	7,0000	435	900
	NNCL4932 V	9	4	160	220	60	6,8000	435	900
	NNF5032 XV	0	5	160	220	80	8,8000	480	970
	NCF3032 V	0	3	160	240	60	8,8000	550	820
	NNF5032 V	0	5	160	240	109	16,6000	740	1360
	NCF2232 V	2	2	160	290	80	23,0000	1030	1490
170	**NNC4834 V**	8	4	170	215	45	4,1000	265	620
	NNCL4834 V	8	4	170	215	45	3,9500	265	620
	NCF2934 V	9	2	170	230	36	4,3000	330	560
	NNC4934 V	9	4	170	230	60	7,3500	445	950
	NNCL4934 V	9	4	170	230	60	7,1000	445	950
	NNF5034 XV	0	5	170	230	80	9,3000	490	1030
	NCF3034 V	0	3	170	260	67	12,2000	710	1070
	NNF5034 V	0	5	170	260	122	22,6000	960	1750
	NCF2234 V	2	2	170	310	86	28,6500	1150	1680
180	**NNC4836 V**	8	4	180	225	45	4,3000	275	660
	NNCL4836 V	8	4	180	225	45	4,1500	275	660
	NNF5036 XV	0	5	180	240	80	9,8000	500	1080
	NCF2936 V	9	2	180	250	42	6,2000	410	690
	NNC4936 V	9	4	180	250	69	10,8000	580	1230
	NNCL4936 V	9	4	180	250	69	10,5000	580	1230
	NCF3036 V	0	3	180	280	74	16,1000	820	1260
	NNF5036 V	0	5	180	280	136	30,1000	1140	2130
	NCF2236 V	2	2	180	320	86	29,8000	1190	1780
190	**NNC4838 V**	8	4	190	240	50	5,6500	315	750
	NNCL4838 V	8	4	190	240	50	5,4500	315	750
	NCF2938 V	9	2	190	260	42	6,5000	455	790
	NNC4938 V	9	4	190	260	69	11,2000	590	1290
	NNCL4938 V	9	4	190	260	69	10,9000	590	1290
	NNF5038 XV	0	5	190	260	80	12,7000	520	1130
	NCF3038 V	0	3	190	290	75	17,0000	840	1320
	NNF5038 V	0	5	190	290	136	31,5000	1160	2210
	NCF2238 V	2	2	190	340	92	35,6500	1310	1920
200	**NCF1840 V**	8	1	200	250	24	2,5700	183	330
	NNC4840 V	8	4	200	250	50	5,9000	325	790
	NNCL4840 V	8	4	200	250	50	5,7000	325	790
	NNF5040 XV	0	5	200	270	80	13,2000	540	1210
	NCF2940 V	9	2	200	280	48	9,1000	550	960
	NNC4940 V	9	4	200	280	80	15,8000	690	1480
	NNCL4940 V	9	4	200	280	80	15,3000	690	1480
	NCF3040 V	0	3	200	310	82	21,8000	960	1530
	NNF5040 V	0	5	200	310	150	40,8000	1350	2600
	NCF2240 V	2	2	200	360	98	43,1200	1420	2040
220	**NCF1844 V**	8	1	220	270	24	2,8000	192	365
	NNC4844 V	8	4	220	270	50	6,4000	340	870
	NNCL4844 V	8	4	220	270	50	6,2000	340	870
	NCF2944 V	9	2	220	300	48	9,9000	580	1050
	NNC4944 V	9	4	220	300	80	17,2000	720	1590
	NNCL4944 V	9	4	220	300	80	16,7000	720	1590
	NNF5044 XV	0	5	220	300	95	19,5000	700	1550
	NCF3044 V	0	3	220	340	90	28,4000	1160	1840

- warehouse - order - phone

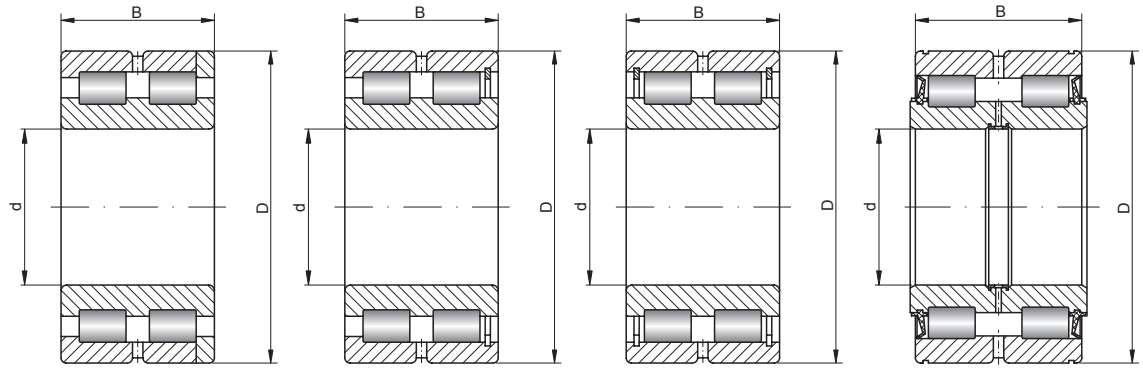

NNC.. NNCF.. NNCL.. NNF..

Rotational speed [rpm]		Equivalent	Basic makes*			Bearing No.
reference	limiting		-	MSP	MUP	
1100	1700	SL014932	↷	↷	↷	**NNC4932 V**
1100	1700	SL024932	↷	↷	↷	**NNCL4932 V**
420	700	SL04160	↷	↷	↷	**NNF5032 XV**
1300	1600	SL183032	↷	↷	↷	**NCF3032 V**
390	650	SL045032	↷	↷	↷	**NNF5032 V**
950	1400	SL182232	↷	↷	↷	**NCF2232 V**
1200	1700	SL014834	↷	↷	↷	**NNC4834 V**
1200	1700	SL024834	↷	↷	↷	**NNCL4834 V**
1200	1600	SL182934	↷	↷	↷	**NCF2934 V**
1000	1600	SL014934	↷	↷	↷	**NNC4934 V**
1000	1600	SL024934	↷	↷	↷	**NNCL4934 V**
390	650	SL04170	↷	↷	↷	**NNF5034 XV**
1100	1500	SL183034	↷	↷	↷	**NCF3034 V**
360	600	SL045034	↷	↷	↷	**NNF5034 V**
900	1400	SL182234	↷	↷	↷	**NCF2234 V**
1100	1600	SL014836	↷	↷	↷	**NNC4836 V**
1100	1600	SL024836	↷	↷	↷	**NNCL4836 V**
360	600	SL04180	↷	↷	↷	**NNF5036 XV**
1200	1500	SL182936	↷	↷	↷	**NCF2936 V**
950	1500	SL014936	↷	↷	↷	**NNC4936 V**
950	1500	SL024936	↷	↷	↷	**NNCL4936 V**
1000	1400	SL183036	↷	↷	↷	**NCF3036 V**
330	550	SL045036	↷	↷	↷	**NNF5036 V**
850	1300	SL182236	↷	↷	↷	**NCF2236 V**
1100	1500	SL014838	↷	↷	↷	**NNC4838 V**
1100	1500	SL024838	↷	↷	↷	**NNCL4838 V**
1100	1400	SL182938	↷	↷	↷	**NCF2938 V**
900	1400	SL014938	↷	↷	↷	**NNC4938 V**
900	1400	SL024938	↷	↷	↷	**NNCL4938 V**
330	550	SL04190	↷	↷	↷	**NNF5038 XV**
1000	1400	SL183038	↷	↷	↷	**NCF3038 XV**
330	550	SL045038	↷	↷	↷	**NNF5038 V**
800	1200	SL182238	↷	↷	↷	**NCF2238 V**
1200	1400	SL181840	↷	↷	↷	**NCF1840 V**
1000	1400	SL014840	↷	↷	↷	**NNC4840 V**
1000	1400	SL024840	↷	↷	↷	**NNCL4840 V**
330	550	SL04200	↷	↷	↷	**NNF5040 XV**
1000	1400	SL182940	↷	↷	↷	**NCF2940 V**
850	1400	SL014940	↷	↷	↷	**NNC4940 V**
850	1400	SL024940	↷	↷	↷	**NNCL4940 V**
900	1300	SL183040	↷	↷	↷	**NCF3040 V**
300	500	SL045040	↷	↷	↷	**NNF5040 V**
800	1200	SL182240	↷	↷	↷	**NCF2240 V**
1000	1300	SL181844	↷	↷	↷	**NCF1844 V**
850	1300	SL014844	↷	↷	↷	**NNC4844 V**
850	1300	SL024844	↷	↷	↷	**NNCL4844 V**
850	1200	SL182944	↷	↷	↷	**NCF2944 V**
750	1200	SL014944	↷	↷	↷	**NNC4944 V**
750	1200	SL024944	↷	↷	↷	**NNCL4944 V**
288	480	SL04220	↷	↷	↷	**NNF5044 XV**
850	1200	SL183044	↷	↷	↷	**NCF3044 V**

https://nppnovoteh.com

5. CYLINDRICAL ROLLER BEARINGS

5.9. Cageless cylindrical roller bearings
- types - NCF, NJF, NNC, NNCF, NNCL, NNF



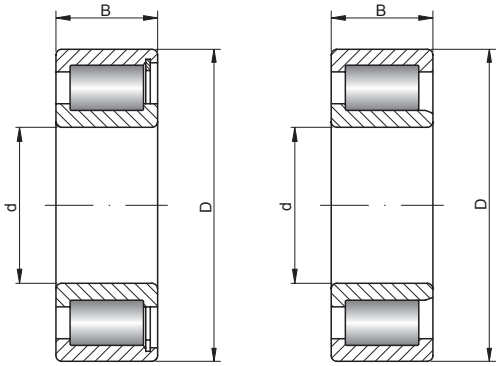

220 – 340 mm

Shaft [mm]	Bearing No.	Series		Dimensions [mm]			Weight [kg]	Basic load ratings [kN]	
		SD	SB	d	D	B		dyn. C	stat. C_0
220 cont.	**NNF5044 V**	0	5	220	340	160	52,5000	1570	3050
240	**NCF1848 V**	8	1	240	300	28	4,4000	224	435
	NNC4848 V	8	4	240	300	60	10,0000	520	1290
	NNCL4848 V	8	4	240	300	60	9,9000	520	1290
	NCF2948 V	9	2	240	320	48	10,6000	610	1140
	NNC4948 V	9	4	240	320	80	18,5000	750	1740
	NNCL4948 V	9	4	240	320	80	17,9000	750	1740
	NNF5048 XV	0	5	240	320	95	21,0000	740	1700
	NCF3048 V	0	3	240	360	92	30,9000	1220	2010
	NNF5048 V	0	5	240	360	160	56,0000	1630	3300
260	**NCF1852 V**	8	1	260	320	28	4,7100	234	475
	NNC4852 V	8	4	260	320	60	11,0000	540	1400
	NNCL4852 V	8	4	260	320	60	10,6000	540	1400
	NNF5052 XV	0	5	260	340	95	22,5000	840	1990
	NCF2952 V	9	2	260	360	60	18,5000	790	1470
	NNC4952 V	9	4	260	360	100	32,0000	1120	2500
	NNCL4952 V	9	4	260	360	100	31,2000	1120	2500
	NCF3052 V	0	3	260	400	104	44,5000	1620	2550
	NNF5052 V	0	5	260	400	190	84,5000	2380	4700
280	**NCF1856 V**	8	1	280	350	33	7,0000	315	620
	NNC4856 V	8	4	280	350	69	16,0000	710	1860
	NNCL4856 V	8	4	280	350	69	15,6000	710	1860
	NCF2956 V	9	2	280	380	60	19,7000	920	1740
	NNC4956 V	9	4	280	380	100	34,0000	1170	2700
	NNCL4956 V	9	4	280	380	100	33,1000	1170	2700
	NCF3056 V	0	3	280	420	106	48,0000	1670	2700
	NNF5056 V	0	5	280	420	190	90,0000	2600	5200
300	**NCF1860 V**	8	1	300	380	38	10,0000	380	750
	NNC4860 V	8	4	300	380	80	23,0000	830	2120
	NNCL4860 V	8	4	300	380	80	22,0000	830	2120
	NNF5060 XV	0	5	300	380	95	25,5000	900	2250
	NCF2960 V	9	2	300	420	72	31,2000	1180	2230
	NNC4960 V	9	4	300	420	118	53,0000	1650	3800
	NNCL4960 V	9	4	300	420	118	51,9000	1650	3800
	NCF3060 V	0	3	300	460	118	66,6000	2040	3350
	NNF5060 V	0	5	300	460	218	126,0000	3000	5800
320	**NCF1864 V**	8	1	320	400	38	10,6000	390	800
	NNC4864 V	8	4	320	400	80	24,0000	860	2280
	NNCL4864 V	8	4	320	400	80	23,5000	860	2280
	NCF2964 V	9	2	320	440	72	32,9000	1220	2370
	NNC4964 V	9	4	320	440	118	56,0000	1720	4100
	NNCL4964 V	9	4	320	440	118	54,9000	1720	4100
	NCF3064 V	0	3	320	480	121	71,7000	2100	3500
340	**NCF1868 V**	8	1	340	420	38	11,2000	405	840
	NNC4868 V	8	4	340	420	80	25,5000	880	2390
	NNCL4868 V	8	4	340	420	80	25,0000	880	2390
	NCF2968 V	9	2	340	460	72	34,7000	1260	2500
	NNC4968 V	9	4	340	460	118	59,0000	1770	4300
	NNCL4968 V	9	4	340	460	118	57,8000	1770	4300
	NCF3068 V	0	3	340	520	133	95,8000	2500	4150

- warehouse - order - phone

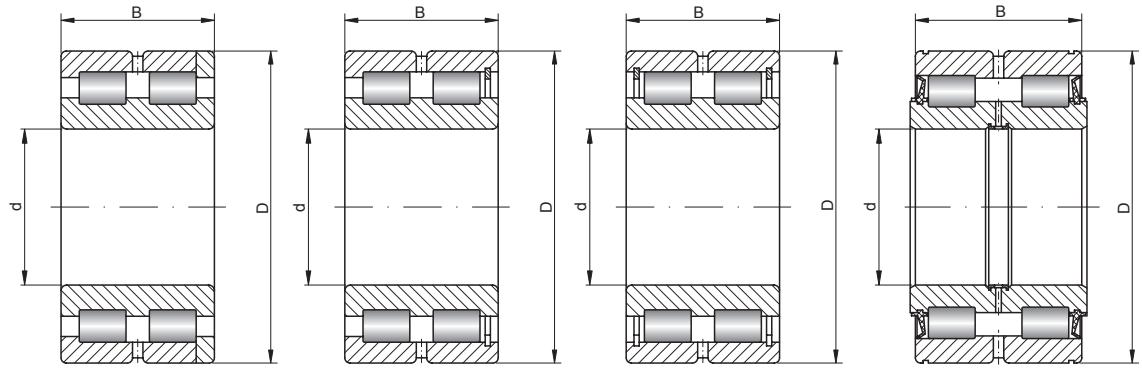

NNC.. NNCF.. NNCL.. NNF..

Rotational speed [rpm]		Equivalent	Basic makes*			Bearing No.
reference	limiting		-	MSP	MUP	
288	480	SL045044	↷	↷	↷	**NNF5044 V**
950	1200	SL181848	↷	↷	↷	**NCF1848 V**
750	1200	SL014848	↷	↷	↷	**NNC4848 V**
750	1200	SL024848	↷	↷	↷	**NNCL4848 V**
750	1200	SL182948	↷	↷	↷	**NCF2948 V**
700	1200	SL014948	↷	↷	↷	**NNC4948 V**
700	1200	SL024948	↷	↷	↷	**NNCL4948 V**
288	480	SL04240	↷	↷	↷	**NNF5048 XV**
750	1100	SL183048	↷	↷	↷	**NCF3048 V**
264	440	SL045048	↷	↷	↷	**NNF5048 V**
850	1100	SL181852	↷	↷	↷	**NCF1852 V**
700	1100	SL014852	↷	↷	↷	**NNC4852 V**
700	1100	SL024852	↷	↷	↷	**NNCL4852 V**
264	440	SL04260	↷	↷	↷	**NNF5052 XV**
700	1000	SL182952	↷	↷	↷	**NCF2952 V**
600	1000	SL014952	↷	↷	↷	**NNC4952 V**
600	1000	SL024952	↷	↷	↷	**NNCL4952 V**
650	1000	SL183052	↷	↷	↷	**NCF3052 V**
240	400	SL045052	↷	↷	↷	**NNF5052 V**
800	1000	SL181856	↷	↷	↷	**NCF1856 V**
600	1000	SL014856	↷	↷	↷	**NNC4856 V**
600	1000	SL024856	↷	↷	↷	**NNCL4856 V**
600	1000	SL182956	↷	↷	↷	**NCF2956 V**
550	1000	SL014956	↷	↷	↷	**NNC4956 V**
550	1000	SL024956	↷	↷	↷	**NNCL4956 V**
600	950	SL183056	↷	↷	↷	**NCF3056 V**
228	380	SL045056	↷	↷	↷	**NNF5056 V**
700	950	SL181860	↷	↷	↷	**NCF1860 V**
550	950	SL014860	↷	↷	↷	**NNC4860 V**
550	950	SL024860	↷	↷	↷	**NNCL4860 V**
228	380	SL04300	↷	↷	↷	**NNF5060 XV**
550	900	SL182960	↷	↷	↷	**NCF2960 V**
460	900	SL014960	↷	↷	↷	**NNC4960 V**
460	900	SL024960	↷	↷	↷	**NNCL4960 V**
500	850	SL183060	↷	↷	↷	**NCF3060 V**
204	340	SL045060	↷	↷	↷	**NNF5060 V**
650	900	SL181864	↷	↷	↷	**NCF1864 V**
500	900	SL014864	↷	↷	↷	**NNC4864 V**
500	900	SL024864	↷	↷	↷	**NNCL4864 V**
500	850	SL182964	↷	↷	↷	**NCF2964 V**
410	850	SL014964	↷	↷	↷	**NNC4964 V**
410	850	SL024964	↷	↷	↷	**NNCL4964 V**
500	800	SL183064	↷	↷	↷	**NCF3064 V**
650	850	SL181868	↷	↷	↷	**NCF1868 V**
480	850	SL014868	↷	↷	↷	**NNC4868 V**
480	850	SL024868	↷	↷	↷	**NNCL4868 V**
480	800	SL182968	↷	↷	↷	**NCF2968 V**
390	800	SL014968	↷	↷	↷	**NNC4968 V**
390	800	SL024968	↷	↷	↷	**NNCL4968 V**
450	750	SL183068	↷	↷	↷	**NCF3068 V**

https://nppnovoteh.com

5. CYLINDRICAL ROLLER BEARINGS

5.9. Cageless cylindrical roller bearings
- types - NCF, NJF, NNC, NNCF, NNCL, NNF



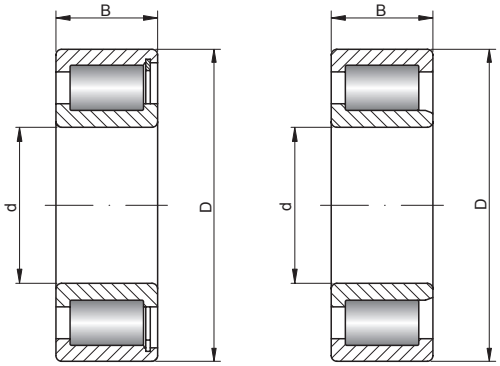

360 – 500 mm

Shaft [mm]	Bearing No.	Series		Dimensions [mm]			Weight [kg]	Basic load ratings [kN]	
		SD	SB	d	D	B		dyn. C	stat. C_0
360	**NCF1872 V**	8	1	360	440	38	11,7000	426	890
	NNC4872 V	8	4	360	440	80	27,0000	910	2550
	NNCL4872 V	8	4	360	440	80	26,0000	910	2550
	NCF2972 V	9	2	360	480	72	36,4000	1290	2650
	NNC4972 V	9	4	360	480	118	62,1000	910	2550
	NNCL4972 V	9	4	360	480	118	60,8000	910	2550
	NCF3072 V	0	3	360	540	134	101,0000	2550	4350
380	**NCF1876 V**	8	1	380	480	46	19,2000	590	1190
	NNC4876 V	8	4	380	480	100	45,5000	1330	3550
	NNCL4876 V	8	4	380	480	100	44,0000	1330	3550
	NCF2976 V	9	2	380	520	82	52,1000	1670	3350
	NNC4976 V	9	4	380	520	140	92,4000	2280	5600
	NNCL4976 V	9	4	380	520	140	90,5000	2280	5600
	NCF3076 V	0	3	380	560	135	106,0000	2600	4500
400	**NCF1880 V**	8	1	400	500	46	20,0000	600	1260
	NNC4880 V	8	4	400	500	100	46,5000	1360	3700
	NNCL4880 V	8	4	400	500	100	45,8000	1360	3700
	NCF2980 V	9	2	400	540	82	54,3000	1730	3560
	NNC4980 V	9	4	400	540	140	96,5000	2340	5900
	NNCL4980 V	9	4	400	540	140	94,6000	2340	5900
	NCF3080 V	0	3	400	600	148	140,0000	3100	5400
420	**NCF1884 V**	8	1	420	520	46	20,9000	620	1310
	NCF2984 V	9	2	420	560	82	56,9000	1750	3600
440	**NCF1888 V**	8	1	440	540	46	21,8000	630	1380
	NCF2988 V	9	2	440	600	95	78,1000	2110	4150
460	**NCF1892 V**	8	1	460	580	56	33,9000	790	1680
	NCF2992 V	9	2	460	620	95	81,1000	2140	4300
480	**NCF1896 V**	8	1	480	600	56	35,2000	810	1740
	NCF2996 V	9	2	480	650	100	94,7000	2410	4850
500	**NCF18/500 V**	8	1	500	620	56	36,5000	830	1830
	NCF29/500 V	9	2	500	670	100	98,3000	2450	5000

- warehouse - order - phone

https://nppnovoteh.com

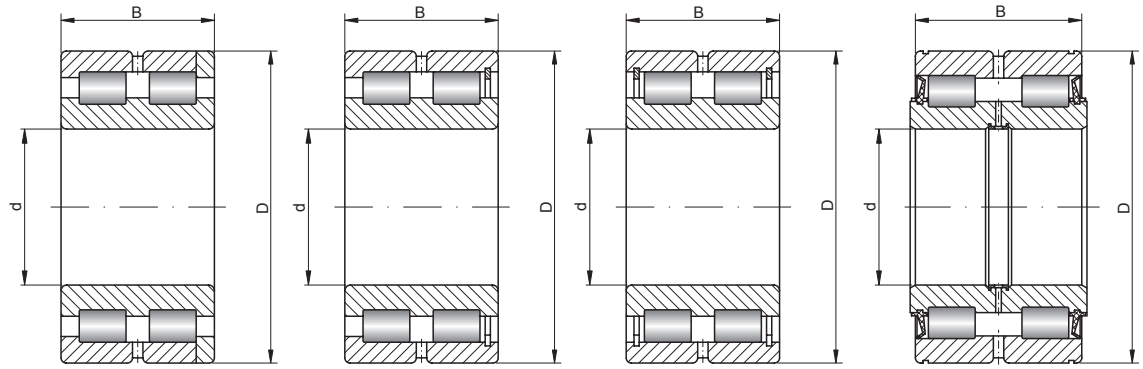

NNC.. NNCF.. NNCL.. NNF..

Rotational speed [rpm]		Equivalent	Basic makes*			Bearing No.
reference	limiting		-	MSP	MUP	
550	800	SL181872				**NCF1872 V**
440	800	SL014872				**NNC4872 V**
440	800	SL024872				**NNCL4872 V**
440	750	SL182972				**NCF2972 V**
440	800	SL014972				**NNC4972 V**
440	800	SL024972				**NNCL4972 V**
430	700	SL183072				**NCF3072 V**
550	750	SL181876				**NCF1876 V**
400	750	SL014876				**NNC4876 V**
400	750	SL024876				**NNCL4876 V**
400	700	SL182976				**NCF2976 V**
340	700	SL014976				**NNC4976 V**
340	700	SL024976				**NNCL4976 V**
410	700	SL183076				**NCF3076 V**
490	700	SL181880				**NCF1880 V**
380	700	SL014880				**NNC4880 V**
380	700	SL024880				**NNCL4880 V**
370	700	SL182980				**NCF2980 V**
310	700	SL014980				**NNC4980 V**
310	700	SL024980				**NNCL4980 V**
360	650	SL183080				**NCF3080 V**
470	700	SL181884				**NCF1884 V**
360	650	SL182984				**NCF2984 V**
440	650	SL181888				**NCF1888 V**
330	600	SL182988				**NCF2988 V**
420	600	SL181892				**NCF1892 V**
320	600	SL182992				**NCF2992 V**
400	600	SL181896				**NCF1896 V**
290	550	SL182996				**NCF2996 V**
380	600	SL1818/500				**NCF18/500 V**
280	550	SL1829/500				**NCF29/500 V**

https://nppnovoteh.com

6. NEEDLE ROLLER BEARINGS AND RELATED BEARINGS



ROLLING BEARINGS

ŁOZYSKA TOCZNE



ZLAGER





CUSCINETTI

SKA TOCZ

ŁOZYSKA TOC

https://nppnovoteh.com

TABLES:

6.	NEEDLE ROLLER BEARINGS AND RELATED BEARINGS
6.1.	Solid needle roller bearings – types – NA, NKI, NAO
6.2.	Thin-walled needle roller bearings – types – HK, BK
6.3.	Needle roller and cage assemblies – types K, KK
6.4.	Needle roller and cage assemblies – types KBK, KZK
6.5.	Adjustable needle roller bearings – type – PNA
6.6.	Combined needle roller bearings – type – NX
6.7.	Combined needle roller bearings – type – NKIA, NKIB
6.8.	Combined needle roller bearings – type – NKX
6.9.	Combined needle roller bearings – type – NKXR
6.10.	One-way clutches – type – HF
6.11.	Internal rings for needle and cylindrical roller bearings – typ – IR

INTRODUCTION:

6. Needle bearings and related bearings

Introduction

Needle bearings represent a variant of cylindrical roller bearings, in which the roller length is at least six times its diameter. As far as the structure, size and variety of types as well as application possibilities are concerned they represent unquestionably the largest group of rolling bearings. Each variant has individual features, but generally needle bearings demonstrate high load capacity at relatively small sizes. It helps obtain a compact bearing-closed pairs construction, and wide variety of sizes and types makes it possible for designers to use new technological solutions. The contact line of tracks and needles is modified (needles are profiled on their ends), what not only eliminates harmful end stresses but also enables minimal misalignment between the shaft and the bearing mounting. Bearings are equipped with steel cages or cages made of steel sheet. In smaller-sized bearings cages made of polyamide strengthened with glass fiber are also in use.

6.1. Single-row and double-row needle roller bearings with an open-end ring or without ring in the uncovered and sealed version

6.1.1. Dimension series

- **NA48.. NA49.. NA59.. NA69.. NA40.. NA22..**
  - with inner ring
- **RNA48.. RNA49.. RNA59.. RNA69.. RNA40.. RNA22..**
  - without inner ring (versions with rubber seals – RS or 2RS designation behind the symbol)
- **NKI.. NKIS..** - with inner ring (S means seal)
- **NK.. NKS..** - without inner ring (S means seal)



Fig.23 Single-row, massive needle roller bearing

6.1.2. Structure and dimensions

The bearing consists of the outer ring, which is functionally connected with the cage containing needles and the detachable inner ring. Bearings with outside diameter above 19 mm have a ring groove and a lubricating hole on the outer ring. NA69-series, 55mm in diameter and above, has two rows of needles. For sealed versions the inner ring has been slightly lengthened, what substantially improves parameters of the bearing tightness.

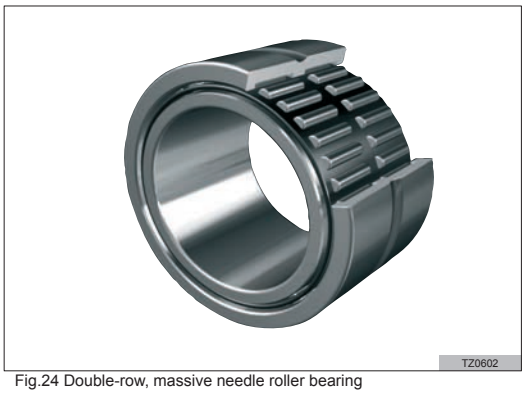

Fig.24 Double-row, massive needle roller bearing

As far as the structure is concerned both series differ from each other in nothing, but NA-series dimensions are consistent with ISO standards, whereas NKI-series dimensions are not standardized but in practice are widely accepted. The latter comprise in their designation, one by one, the inner diameter size in mm, the "/"-mark and the width size in mm, e.g. NKI 28/20, but for series without the inner ring one provides (in spite of the inner diameter) the rated diameter of the inscribed circle of the cage with needles – Fw, e.g. NK 25/25.

6.1.3. Features and application

Among other needle bearings these series are characterized by a high load capacity at high rotational parameters. Needle bearings with inner ring are applied as often as needle bearings without it, but the bearings without the inner ring can be applied under the condition that, surface--hardening (at least 60HRC) and grinding is applied to the tracks on the shafts. Important feature of these bearings is

https://nppnovoteh.com

the possibility of axial shift, especially of bearings without inner ring or with specially extended ring. On account of the features mentioned above the application of these bearings is very wide, especially wherever bearing-closed pairs are required to have small cross-section and little dead weight. NA-series bearings in the sealed version have slightly extended inner ring.

6.2. Needle roller bearings without lips on the outer ring

6.2.1. Dimension series

- **NAO..** - both single-row and double-row with inner ring
- **RNAO..** - both single-row and double-row with inner ring.

6.2.2. Structure and dimensions

In terms of structure they correspond to the NA- and NKI-series bearings, but their outer ring has no lips and as a result is detachable – an open-end ring. Narrow bearings with one row of needles in contrast to wider bearings with two rows do not have a groove or a lubricating hole on the outer ring. Dimensioning of the NAO-series with inner ring consists in providing three dimensions in mm behind the symbol:

d – inside diameter,
D – outside diameter,
B – width, divided by the “x” sign.

Designation of the RNAO-series without inner ring provides the rated diameter of the inscribed circle of the cage with needles (Fw) in spite of the size of the inside diameter d.

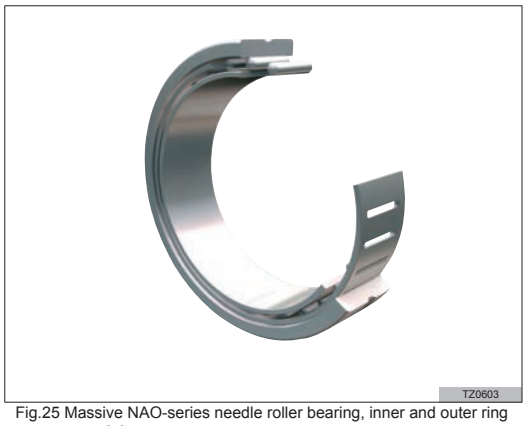

Fig.25 Massive NAO-series needle roller bearing, inner and outer ring are open-end rings

6.2.3. Features and application

The open-end outer ring represents the key feature of these bearings, what in turn enables an easy axial shift in relation to both rings. Double detachability enables individual assembly of all elements. These bearings are above all applied in the printing industry, textile industry, aircraft industry as well as machine-building industry – machine tools.

6.3. Adjustable needle roller bearings

6.3.1. Dimension series

- **PNA..** - with inner ring
- **RPNA..** - without inner ring.

6.3.2. Structure and dimensions

In appearance and dimensions these bearings correspond to the NKI-series but their internal structure is quite different. There is a special spherical ring – having a decisive effect on adjusting possibilities of the bearing – between the outer ring, which has neither a groove nor a lubricating hole, and the cage with needles.

Dimensioning rules are the same as in case of NKI- and NK-series bearings.

6.3.3. Features and application

Thanks to this structure the PNA- and RPNA-series bearings obtain features of adjustable bearings additionally to features that are typical for needle bearings.

The possibility of the shaft axis displacement in relation to the housing axis is in the range between 0° and 3°. The PNA- and RPNA-series bearings as typical adjustable bearings, make also possible the compensation of errors of alignment and feature considerable resistance to shaft deflection. These bearings are implemented especially in construction solutions where on the one hand the size of the housing of the bearing and its load carrying capacity require the use of the needle bearing and on the other hand the operating conditions show the necessity for application of the adjustable bearing.

The PNA- and RPNA-series bearings as the adjustable bearings are very often assembled in bearing mountings.

6.4. Thin-walled needle roller bearings without inner ring, open-end bearings and closed-end bearings

6.4.1. Dimension series

- **HK..** - open-end bearings
- **BK..** - closed-end bearings.

6.4.2. Structure and dimensions

The most diversified group of needle bearings as far as dimensions are concerned is represented by thin-walled



Fig.26 Thin-walled needle roller bearing, open-end version



Fig.27 Thin-walled needle roller bearing, closed-end version

needle roller bearings. In contrast to other needle bearings, the thin-walled needle roller bearings have a very thin outer ring, stamped from steel sheet. The bearings in the basic--make have no inner ring. They are usually single-row bearings, except for wide 1622, 2030, 2538, 3038 bearings, which comprise two adjacent rows of needles and the lubricating hole in the outer ring (other bearings can have this hole, too). Open-end bearings are opened from both sides and closed-end bearings are closed from one side and are suited to be mounted on shaft ends. The outer ring stamped from hardened steel sheet, cage and needles form the inseparable whole. Special versions with contact seal made of polyurethane or synthetic rubber are also produced – RS or 2RS marking behind the bearing symbol. Dimensions of HK- and BK-series bearings are standardized and consistent with ISO standards. In their designation the dimensions in mm are provided in the following order: d-inside diameter, B-width, and for bearings with other dimensions one puts D-outside diameter between “d” and “B”, e.g. HK1210-standardized dimensions d=12mm B=10mm, HK071108-not standardized dimensions d=7mm d=11mm B=8mm

6.4.3. Features and application

The key feature of thin-walled needle roller bearings is a very small cross-sectional height and high ability to accommodate loads. They are used above all wherever the holes in the bearing mounting cannot be used as tracks for needle roller and cage assemblies and at the same time one wants to obtain economical and compact place for bearing system. Thin-walled needle roller bearings must be tightly seated in a hole of the bearing mounting and if one gives up mounting faces, snap rings and the like for axial positioning, bearing mounting holes can be made easily and economically. The bottom of the closed-end bearing is designed to enable small axial leading forces to be carried. If the shaft cannot be hardened or grinded, inner rings (IR) are also applied to these bearings.

6.5. One-way needle clutches

6.5.1. Dimension series

- HF..

6.5.2. Basic features

A special variant of needle roller bearings where rotation on its own axis is possible only in one direction. Such bearings enable rotation only in one direction, rotation of needles in the other direction is prevented by special locking pawls. In terms of appearance and size they resemble the HK-series thin-walled needle roller bearings very much. Both cages and blocking elements can be made of steel or plastics – TN marking behind the bearing symbol.

6.6. Needle roller and cage assemblies

6.6.1. Dimension series

- **K..** - single-row
- **KK..** - double-row
- **KBK..** - single-row for crankshafts
- **KZK..** - single-row for piston pins.

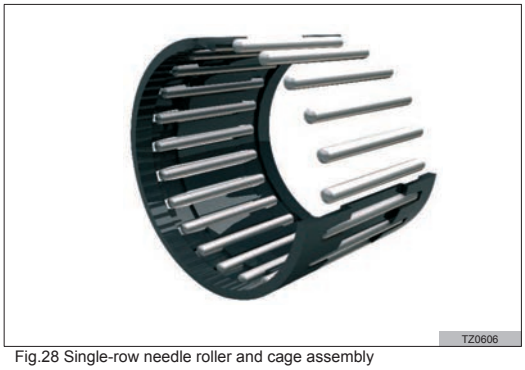

Fig.28 Single-row needle roller and cage assembly

6.6.2. Structure and dimensions

The only element of needle roller and cage assembly is the cage itself with one or two rows of needles. Symbolic representation is very simple and comes down to providing dimensions in mm:
d - inside diameter,
D - outside diameter,
B - width, all separated with the “x” mark.

6.6.3. Features and application

They guarantee the smallest cross-section of the bearing--closed pairs at high load capacity from among all needle bearings. They interact directly with other machine elements but it requires keeping proper diameter tolerances



Fig.29 Double-row needle roller and cage assembly

for outer track and inner track as well as for their hardness, shape accuracy and placement. The cages of needle roller and cage assemblies are normally made of steel but several types, especially of smaller sizes are available with cages made of polyamide – TN mark behind the bearing sym-

https://nppnovoteh.com

bol. Construction of cages depends on main dimensions ratio, whereas they can be lightweight models with tender structure through to solid variants. Needle roller and cage assemblies implemented in connecting-rods construction are specially designed. In traditional needle roller and cage assemblies rolling elements are placed centrally in relation to the cage circumference, whereas in the KBK assemblies the needles are placed outside from this circumference, and in the KZK assemblies inside it.

Because of their specific features, very simple construction at low prices, needle roller and cage assemblies are applied in all branches of modern industry.

6.7. Needle roller bearings combined with other bearings

6.7.1. Dimension series

- **NX..** – combined with a ball bearing, without inner ring
- **NX..Z** – as NX.., but a closed (inseparable) version
- **NKIA..** – combined with a ball bearing with the inner ring composed of two parts or one part
- **NKIB..** – as NKIA.., but this time a double-direction version with the inner ring composed of two parts
- **NKX..** – combined with a thrust ball bearing
- **NKX..Z** – as NKX.., but a closed (inseparable) version
- **NKXR..** – combined with a thrust cylindrical bearing
- **NKXR..Z** – as NKXR.. but this time a closed (inseparable) version

6.7.2. Main features

- Combined bearings, unique in their construction, combine the features of bearing type they are composed of.
- Such solution allows to meet at the same time high requirements regarding load carrying capacity of the bearing-closed pairs, guiding precision and rotational parameters.
- On the whole, they guarantee the maximum economizing on the space the housing of the bearing takes.

They are relatively expensive, but obtaining the same results with other bearing types is often impossible or increases the cost of making a bearing-closed pair.

6.8. Inner rings of needle and cylindrical roller bearings

6.8.1. Dimension series

- **IR..**

6.8.2. Main features

Because of the structure of needle and cylindrical roller bearings (detachability) the inner rings are also manufactured separately in many sizes and types, thus giving many possibilities for constructional solutions. Depending on needs the rings can be made longer or shorter with or without chamfered ends and requirements regarding precision and clearance are met by choosing the appropriate diameters. Dimensioning of rings comes down to providing actual dimensions in mm:
d – inside diameter
D – outside diameter
B – length (width) separated by the “X” sign.

https://nppnovoteh.com

https://nppnovoteh.com

6. NEEDLE ROLLER BEARINGS AND RELATED BEARINGS

6.1. Solid needle roller bearings – types – NA, NKI, NAO



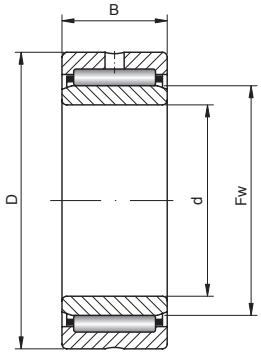

NA 49.. NA 48.. NA 40..
NA 22.. NA 59.. NA 69..
NK.. NKI..

5 – 12 mm

Shaft [mm]	Bearing No.	Inner ring IR	Rows	Dimensions [mm]					Weight [kg]
				d	Fw	Fz	D	B	
5	**RNAO5x10x8**	-	1	5	5	8	10	8	0,0030
	NK5/10	-	1	5	5	-	10	10	0,0030
	NK5/12	-	1	5	5	-	10	12	0,0050
	NA495	IR5X7X10	1	5	7	-	13	10	0,0070
	NKI5/12	IR5X8X12	1	5	8	-	15	12	0,0120
	NKI5/16	IR5X8X16	1	5	8	-	15	16	0,0150
6	**NK6/10**	-	1	6	6	-	12	10	0,0050
	NK6/12	-	1	6	6	-	12	12	0,0060
	RNAO6x13x8	-	1	6	6	9	13	8	0,0060
	NA496	IR6X8X10	1	6	8	-	15	10	0,0090
	NKI6/12	IR6X9X12	1	6	9	-	16	12	0,0140
	NKI6/16	IR6X9X16	1	6	9	-	16	16	0,0180
	NAO6x17x10	IR6X10X10	1	6	10	13	17	10	0,0140
	NA22/6 2RS	IR6X10X12	1	6	10	-	19	12	0,0220
7	**RNA495**	-	1	7	7	-	13	10	0,0050
	RNAO7x14x8	-	1	7	7	10	14	8	0,0060
	NK7/10	-	1	7	7	-	14	10	0,0070
	NK7/12	-	1	7	7	-	14	12	0,0080
	NA497	IR7X9X10	1	7	9	-	17	10	0,0120
	NKI7/12	IR7X10X12	1	7	10	-	17	12	0,0140
	NKI7/16	IR7X10X16	1	7	10	-	17	16	0,0180
8	**RNA496**	-	1	8	8	-	15	10	0,0060
	RNAO8x15x10	-	1	8	8	11	15	10	0,0080
	NK8/12	-	1	8	8	-	15	12	0,0090
	NK8/16	-	1	8	8	-	15	16	0,0120
	NA498	IR8X10X11	1	8	10	-	19	11	0,0160
	NA22/8 2RS	IR8X12X12	1	8	12	-	24	12	0,0340
9	**NK9/12**	-	1	9	9	-	16	12	0,0100
	NK9/16	-	1	9	9	-	16	16	0,0130
	RNA497	-	1	9	9	-	17	10	0,0080
	NKI9/12	IR9X12X12	1	9	12	-	19	12	0,0170
	NKI9/16	IR9X12X16	1	9	12	-	19	16	0,0220
	NA499	IR9X12X11	1	9	12	-	20	11	0,0170
	NAO9x22x12	IR9X12X12	1	9	12	18	22	12	0,0235
10	**RNAO10x17x10**	-	1	10	10	13	17	10	0,0100
	NK10/12	-	1	10	10	-	17	12	0,0120
	NK10/16	-	1	10	10	-	17	16	0,0130
	RNA498	-	1	10	10	-	19	11	0,0100
	RNA22/6 2RS	-	1	10	10	-	19	12	0,0180
	NA4900	IR10X14X13	1	10	14	-	22	13	0,0230
	NA4900 2RS	IR10X14X14	1	10	14	-	22	14	0,0250
	NKI10/16	IR10X14X16	1	10	14	-	22	16	0,0290
	NKI10/20	IR10X14X20	1	10	14	-	22	20	0,0370
	NA2200 2RS	IR10X14X14	1	10	14	-	30	14	0,0600
12	**NK12/12**	-	1	12	12	-	19	12	0,0140
	NK12/16	-	1	12	12	-	19	16	0,0160
	RNA499	-	1	12	12	-	20	11	0,0110
	RNAO12x22x12	-	1	12	12	18	22	12	0,0190
	RNA22/8 2RS	-	1	12	12	-	24	12	0,0290
	NA4901	IR12X16X13	1	12	16	-	24	13	0,0260

- warehouse - order - phone

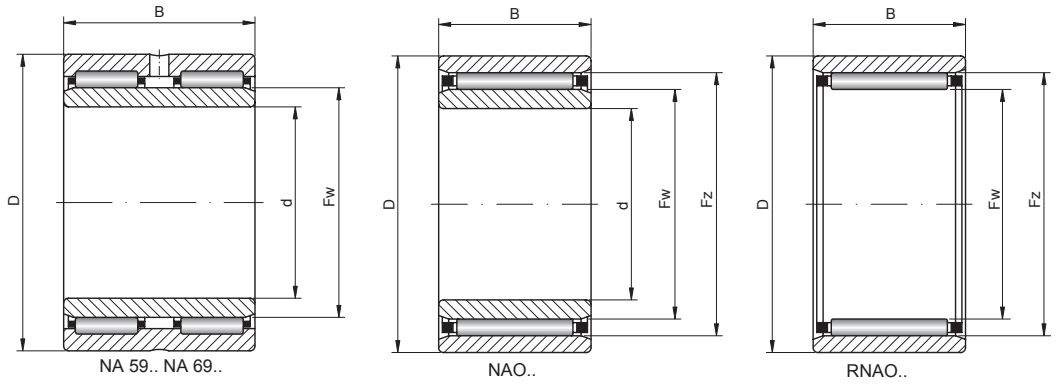

NA 59.. NA 69.. NAO.. RNAO..

Basic load ratings [kN]		Limiting speed [rpm]		Basic makes*				Bearing No.
dyn. C	stat. C_0	grease	oil	-	TN	M	C3	
2,35	1,92	24000	34000	●	●	●	●	**RNAO5x10x8**
2,29	2	36000	52000	◴	◴	●	●	**NK5/10**
2,92	2,7	36000	52000	◴	◴	●	●	**NK5/12**
2,67	2,35	23000	34000	●	●	●	●	**NA495**
3,8	4,25	28000	40000	◴	◴	●	●	**NKI5/12**
5,01	5,85	28000	40000	◴	◴	●	●	**NKI5/16**
2,55	2,36	32000	45000	◴	◴	●	●	**NK6/10**
3,3	3,2	32000	45000	◴	◴	●	●	**NK6/12**
2,6	2,28	22000	34000	●	●	●	●	**RNAO6x13x8**
3,15	3	21000	32000	●	●	●	●	**NA496**
4,4	5,2	24000	36000	◴	◴	●	●	**NKI6/12**
5,72	7,2	24000	36000	◴	◴	●	●	**NKI6/16**
4,75	5,5	18000	29000	●	●	●	●	**NAO6x17x10**
4,57	4,05	16000	-	●	●	●	●	**NA22/6 2RS**
2,67	2,35	23000	34000	●	●	●	●	**RNA495**
2,85	2,65	20000	32000	●	●	●	●	**RNAO7x14x8**
2,81	2,75	30000	43000	◴	◴	●	●	**NK7/10**
3,58	3,75	30000	43000	◴	◴	●	●	**NK7/12**
3,6	3,65	20000	30000	●	●	●	●	**NA497**
4,57	5,7	22000	34000	◴	◴	●	●	**NKI7/12**
5,94	8	22000	34000	◴	◴	●	●	**NKI7/16**
3,15	3	21000	32000	●	●	●	●	**RNA496**
3,95	4,1	20000	32000	●	●	●	●	**RNAO8x15x10**
3,8	4,25	28000	40000	◴	◴	●	●	**NK8/12**
5,01	5,85	28000	40000	◴	◴	●	●	**NK8/16**
4,3	3,95	19000	28000	●	●	●	●	**NA498**
5,39	5,2	14000	-	●	●	●	●	**NA22/8 2RS**
4,4	5,2	24000	36000	◴	◴	●	●	**NK9/12**
5,72	7,2	24000	36000	◴	◴	●	●	**NK9/16**
3,6	3,65	20000	30000	●	●	●	●	**RNA497**
6,71	8,15	19000	30000	◴	◴	●	●	**NKI9/12**
9,13	12	19000	30000	◴	◴	●	●	**NKI9/16**
4,85	4,9	17000	26000	●	●	●	●	**NA499**
10	11,8	17000	26000	●	●	●	●	**NAO9x22x12**
4,75	5,5	19000	30000	●	●	●	●	**RNAO10x17x10**
4,57	5,7	22000	34000	◴	◴	●	●	**NK10/12**
5,94	8	22000	34000	◴	◴	●	●	**NK10/16**
4,3	3,95	19000	28000	●	●	●	●	**RNA498**
4,57	4,05	16000	-	●	●	●	●	**RNA22/6 2RS**
8,8	10,4	17000	26000	▲	◴	●	◴	**NA4900**
7,37	8,15	13000	-	▲	◴	●	◴	**NA4900 2RS**
10,2	12,5	17000	26000	◴	◴	●	●	**NKI10/16**
12,8	16,6	17000	26000	◴	◴	●	●	**NKI10/20**
7,37	8,15	13000	-	●	●	●	●	**NA2200 2RS**
6,71	8,15	19000	30000	◴	◴	●	●	**NK12/12**
9,13	12	19000	30000	◴	◴	●	●	**NK12/16**
4,85	4,9	17000	26000	●	●	●	●	**RNA499**
10	9,9	17000	26000	●	●	●	●	**RNAO12x22x12**
5,39	5,2	14000	-	●	●	●	●	**RNA22/8 2RS**
9,9	12,2	16000	24000	▲	◴	●	◴	**NA4901**

* Other products also available

https://nppnovoteh.com

6. NEEDLE ROLLER BEARINGS AND RELATED BEARINGS

6.1. Solid needle roller bearings – types – NA, NKI, NAO



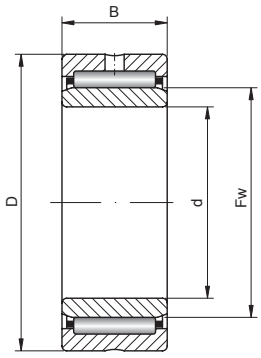

NA 49.. NA 48.. NA 40..
NA 22.. NA 59.. NA 69..
NK.. NKI..

12 – 19 mm

Shaft [mm]	Bearing No.	Inner ring IR	Rows	Dimensions [mm]					Weight [kg]
				d	Fw	Fz	D	B	
12 cont.	**NAO12x24x13**	IR12X16X13	1	12	16	20	24	13	0,0300
	NA4901 2RS	IR12X16X14	1	12	16	-	24	14	0,0280
	NKI12/16	IR12X16X16	1	12	16	-	24	16	0,0330
	NKI12/20	IR12X16X20	1	12	16	-	24	20	0,0420
	NA6901	IR12X16X22	1	12	16	-	24	22	0,0460
	NAO12x28x12	IR12X16X12	1	12	16	22	28	12	0,0400
	NA2201 2RS	IR12X16X14	1	12	16	-	32	14	0,0670
14	**RNA4900**	-	1	14	14	-	22	13	0,0180
	RNA4900 2RS	-	1	14	14	-	22	13	0,0160
	NK14/16	-	1	14	14	-	22	16	0,0210
	NK14/20	-	1	14	14	-	22	20	0,0260
	RNA2200 2RS	-	1	14	14	-	30	14	0,0520
15	**RNAO15x23x13**	-	1	15	15	19	23	13	0,0200
	NK15/16	-	1	15	15	-	23	16	0,0220
	NK15/20	-	1	15	15	-	23	20	0,0270
	NKI15/16	IR15X19X16	1	15	19	-	27	16	0,0390
	NKI15/20	IR15X19X20	1	15	19	-	27	20	0,0490
	NA4902	IR15X20X13	1	15	20	-	28	13	0,0340
	NAO15x28x13	IR15X20X13	1	15	20	24	28	13	0,0290
	NA4902 2RS	IR15X20X14	1	15	20	-	28	14	0,0370
	NA5902	IR15X20X18	1	15	20	-	28	18	0,0520
	NA6902	IR15X20X23	1	15	20	-	28	23	0,0640
	NAO15x32x12	IR15X20X12	1	15	20	26	32	12	0,0500
	NA2202 2RS	IR15X20X14	1	15	20	-	35	14	0,0750
	NKIS15	IR15X22X20	1	15	22	-	35	20	0,0660
16	**RNA4901**	-	1	16	16	-	24	13	0,0200
	RNA4901 2RS	-	1	16	16	-	24	13	0,0180
	RNAO16x24x13	-	1	16	16	20	24	13	0,0210
	NK16/16	-	1	16	16	-	24	16	0,0220
	NK16/20	-	1	16	16	-	24	20	0,0320
	RNA6901	-	1	16	16	-	24	22	0,0320
	RNAO16x28x12	-	1	16	16	22	28	12	0,0320
	RNA2201 2RS	-	1	16	16	-	32	14	0,0570
17	**RNAO17x25x13**	-	1	17	17	21	25	13	0,0220
	NK17/16	-	1	17	17	-	25	16	0,0290
	NK17/20	-	1	17	17	-	25	20	0,0300
	NKI17/16	IR17X21X16	1	17	21	-	29	16	0,0430
	NKI17/20	IR17X21X20	1	17	21	-	29	20	0,0540
	NA4903	IR17X22X13	1	17	22	-	30	13	0,0370
	NAO17x30x13	IR17X22X13	1	17	22	26	30	13	0,0420
	NA4903 2RS	IR17X22X14	1	17	22	-	30	14	0,0400
	NA5903	IR17X22X18	1	17	22	-	30	18	0,0560
	NA6903	IR17X22X23	1	17	22	-	30	23	0,0720
	NAO17x35x16	IR17X22X16	1	17	22	29	35	16	0,0780
	NKIS17	IR17X28X20	1	17	28	-	37	20	0,0980
	NA2203 2RS	IR17X22X16	1	17	22	-	40	16	0,1100
18	**NK18/16**	-	1	18	18	-	26	16	0,0250
	NK18/20	-	1	18	18	-	26	20	0,0320
	RNAO18x30x24	-	2	18	18	24	30	24	0,0690
19	**NK19/16**	-	1	19	19	-	27	16	0,0260

- warehouse - order - phone

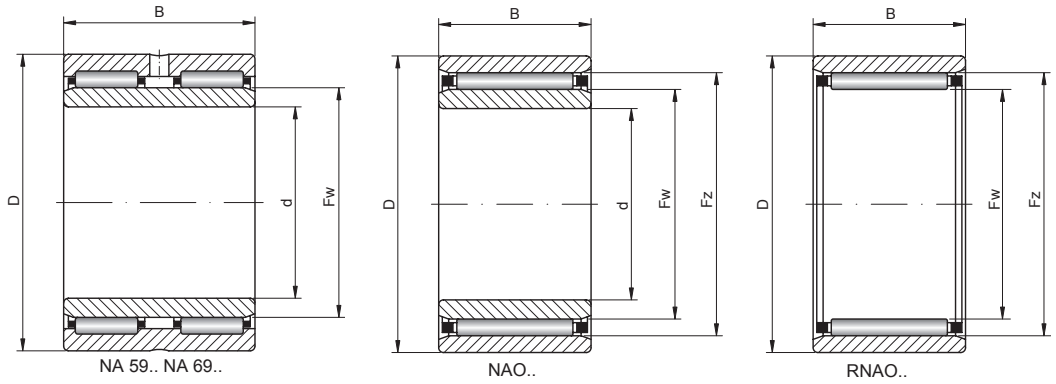

NA 59.. NA 69.. NAO.. RNAO..

Basic load ratings [kN]		Limiting speed [rpm]		Basic makes*				Bearing No.
dyn. C	stat. C_0	grease	oil	-	TN	M	C3	
8,9	11,8	16000	24000	●	●	●	●	**NAO12x24x13**
8,09	9,65	12000	-	■	◴	●	◴	**NA4901 2RS**
11,7	15,3	16000	24000	◴	◴	●	●	**NKI12/16**
14,5	20	16000	24000	◴	◴	●	●	**NKI12/20**
16,1	23,2	16000	24000	■	◴	●	◴	**NA6901**
11,5	12,5	15000	22000	●	●	●	●	**NAO12x28x12**
8,09	9,65	12000	-	●	●	●	●	**NA2201 2RS**
8,8	10,4	17000	26000	■	◴	●	◴	**RNA4900**
6,8	6,9	13000	-	■	◴	●	◴	**RNA4900 2RS**
10,2	12,5	17000	26000	◴	◴	●	●	**NK14/16**
12,8	16,6	17000	26000	◴	◴	●	●	**NK14/20**
7,37	8,15	13000	-	●	●	●	●	**RNA2200 2RS**
8,5	10,9	16000	24000	●	●	●	●	**RNAO15x23x13**
11	14	16000	24000	◴	◴	●	●	**NK15/16**
13,8	18,3	16000	24000	◴	◴	●	●	**NK15/20**
13,4	19	14000	20000	◴	◴	●	●	**NKI15/16**
16,5	25,5	14000	20000	◴	◴	●	●	**NKI15/20**
11,2	15,3	13000	19000	■	◴	●	◴	**NA4902**
9,8	14,3	14000	20000	●	●	●	●	**NAO15x28x13**
9,13	12	9500	-	■	◴	●	◴	**NA4902 2RS**
14	19,1	13000	20000	●	●	●	●	**NA5902**
17,2	27	13000	19000	■	◴	●	◴	**NA6902**
13,4	16,2	13000	19000	●	●	●	●	**NAO15x32x12**
9,13	12	9500	-	●	●	●	●	**NA2202 2RS**
23,4	28	10500	-	◴	◴	●	●	**NKIS15**
9,9	12,2	16000	24000	■	◴	●	◴	**RNA4901**
7,6	8,3	12000	-	■	◴	●	◴	**RNA4901 2RS**
8,9	11,8	16000	24000	●	●	●	●	**RNAO16x24x13**
11,7	15,3	16000	24000	◴	◴	●	●	**NK16/16**
14,5	20	16000	24000	◴	◴	●	●	**NK16/20**
16,1	23,2	16000	24000	■	◴	●	◴	**RNA6901**
11,5	12,5	15000	22000	●	●	●	●	**RNAO16x28x12**
8,09	9,65	12000	-	●	●	●	●	**RNA2201 2RS**
10,4	14,6	15000	22000	●	●	●	●	**RNAO17x25x13**
12,1	16,6	15000	22000	◴	◴	●	●	**NK17/16**
15,1	22	15000	22000	◴	◴	●	●	**NK17/20**
13,8	20,4	13000	19000	◴	◴	●	●	**NKI17/16**
17,2	27	13000	19000	◴	◴	●	●	**NKI17/20**
11,4	16,3	12000	18000	■	◴	●	◴	**NA4903**
10,4	15,9	12000	18000	●	●	●	●	**NAO17x30x13**
9,52	12,9	9000	-	■	◴	●	◴	**NA4903 2RS**
15,2	21,7	12000	18000	●	●	●	●	**NA5903**
18,7	30,5	12000	18000	■	◴	●	◴	**NA6903**
20	25,5	11000	17000	●	●	●	●	**NAO17x35x16**
26	33,5	9500	-	◴	◴	●	●	**NKIS17**
11,4	16,3	6000	-	●	●	●	●	**NA2203 2RS**
12,8	17,6	15000	22000	◴	◴	●	●	**NK18/16**
16,1	23,6	15000	22000	◴	◴	●	●	**NK18/20**
21,9	30	14000	20000	●	●	●	●	**RNAO18x30x24**
13,4	19	14000	20000	◴	◴	●	●	**NK19/16**

* Other products also available

https://nppnovoteh.com

6. NEEDLE ROLLER BEARINGS AND RELATED BEARINGS

6.1. Solid needle roller bearings – types – NA, NKI, NAO



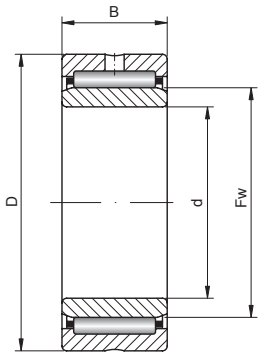

NA 49.. NA 48.. NA 40..
NA 22.. NA 59.. NA 69..
NK.. NKI..

19 – 25 mm

Shaft [mm]	Bearing No.	Inner ring IR	Rows	Dimensions [mm]					Weight [kg]
				d	Fw	Fz	D	B	
19 cont.	**NK19/20**	-	1	19	19	-	27	20	0,0320
20	**RNA4902**	-	1	20	20	-	28	13	0,0220
	RNA4902 2RS	-	1	20	20	-	28	13	0,0215
	RNAO20x28x13	-	1	20	20	24	28	13	0,0250
	NK20/16	-	1	20	20	-	28	16	0,0270
	RNA5902	-	1	20	20	-	28	18	0,0340
	NK20/20	-	1	20	20	-	28	20	0,0340
	RNA6902	-	1	20	20	-	28	23	0,0400
	RNAO20x28x26	-	2	20	20	24	28	26	0,0500
	RNAO20x32x12	-	1	20	20	26	32	12	0,0380
	NKI20/16	IR20X24X16	1	20	24	-	32	16	0,0490
	NKI20/20	IR20X24X20	1	20	24	-	32	20	0,0610
	NKS20	-	1	20	20	-	32	20	0,0438
	RNA2202 2RS	-	1	20	20	-	35	14	0,0600
	NAO20x35x17	IR20X25X17	1	20	25	29	35	17	0,0760
	NAO20x37x16	IR20X25X16	1	20	25	32	37	16	0,0820
	NA4904	IR20X25X17	1	20	25	-	37	17	0,0750
	NA4904 2RS	IR20X25X18	1	20	25	-	37	18	0,0800
	NA5904	IR20X25X23	1	20	25	-	37	23	0,1150
	NA6904	IR20X25X30	1	20	25	-	37	30	0,1400
	NKIS20	IR20X28X20	1	20	28	-	42	20	0,1300
	NA4004 V	IR20X28X22	1	20	28	-	42	22	0,1760
	NA2204 2RS	IR20X25X18	1	20	25	-	47	18	0,1800
21	**NK21/16**	-	1	21	21	-	29	16	0,0280
	NK21/20	-	1	21	21	-	29	20	0,0350
22	**RNA4903**	-	1	22	22	-	30	13	0,0220
	RNA4903 2RS	-	1	22	22	-	30	13	0,0230
	RNAO22x30x13	-	1	22	22	26	30	13	0,0270
	NK22/16	-	1	22	22	-	30	16	0,0300
	RNA5903	-	1	22	22	-	30	18	0,0360
	NK22/20	-	1	22	22	-	30	20	0,0370
	RNA6903	-	1	22	22	-	30	23	0,0420
	NKI22/16	IR22X26X16	1	22	26	-	34	16	0,0520
	NKI22/20	IR22X26X20	1	22	26	-	34	20	0,0650
	RNAO22x35x16	-	1	22	22	29	35	16	0,0590
	NKS22	-	1	22	22	-	35	20	0,0533
	NA49/22	IR22X28X17	1	22	28	-	39	17	0,0800
	NA59/22	IR22X28X23	1	22	28	-	39	23	0,1340
	NA69/22	IR22X28X30	1	22	28	-	39	30	0,1500
	RNA2203 2RS	-	1	22	22	-	40	16	0,0940
24	**NK24/16**	-	1	24	24	-	32	16	0,0320
	NK24/20	-	1	24	24	-	32	20	0,0400
	NKS24	-	1	24	24	-	37	20	0,0650
25	**NK25/16**	-	1	25	25	-	33	16	0,0330
	NK25/20	-	1	25	25	-	33	20	0,0420
	RNAO25x35x17	-	1	25	25	29	35	17	0,0530
	RNAO25x35x26	-	2	25	25	29	35	26	0,0760
	RNAO25x37x16	-	1	25	25	32	37	16	0,0600
	RNA4904	-	1	25	25	-	37	17	0,0520
	RNA4904 2RS	-	1	25	25	-	37	17	0,0560
	RNA5904	-	1	25	25	-	37	23	0,0750

- warehouse - order - phone

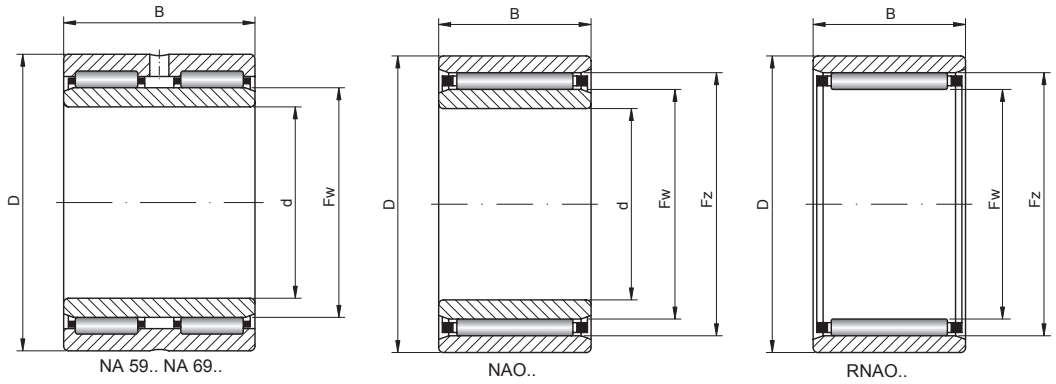

NA 59.. NA 69.. NAO.. RNAO..

Basic load ratings [kN]		Limiting speed [rpm]		Basic makes*				Bearing No.
dyn. C	stat. C_0	grease	oil	-	TN	M	C3	
16,5	25,5	14000	20000	◴	◴	◝	◝	**NK19/20**
11,2	15,3	13000	19000	▬	◴	◝	◴	**RNA4902**
8,6	10,3	10000	-	▬	◴	◝	◴	**RNA4902 2RS**
9,8	14,3	14000	20000	◝	◝	◝	◝	**RNAO20x28x13**
13,2	19,3	13000	19000	◴	◴	◝	◝	**NK20/16**
14	19,1	14000	20000	◝	◝	◝	◝	**RNA5902**
16,5	25,5	13000	19000	◴	◴	◝	◝	**NK20/20**
17,2	27	13000	19000	▬	◴	◝	◴	**RNA6902**
16,8	28,5	14000	20000	◝	◝	◝	◝	**RNAO20x28x26**
13,4	16,2	13000	19000	◝	◝	◝	◝	**RNAO20x32x12**
15,4	24,5	10000	16000	◴	◴	◝	◝	**NKI20/16**
19	32,5	10000	16000	◴	◴	◝	◝	**NKI20/20**
23,5	28	10500	-	◴	◴	◝	◝	**NKS20**
9,13	12	9500	-	◝	◝	◝	◝	**RNA2202 2RS**
14,9	26	10000	16000	◝	◝	◝	◝	**NAO20x35x17**
21	28	9500	15000	◝	◝	◝	◝	**NAO20x37x16**
21,6	28	9500	15000	▬	◴	◝	◴	**NA4904**
19,4	22,4	7500	-	▬	◴	◝	◴	**NA4904 2RS**
28,4	37	11000	16000	◝	◝	◝	◝	**NA5904**
35,2	53	9500	15000	▬	◴	◝	◴	**NA6904**
28,6	39	8500	-	◴	◴	◝	◝	**NKIS20**
30,4	55,2	3800	5600	▬	◝	◝	◝	**NA4004 V**
19,4	22,4	7500	-	◝	◝	◝	◝	**NA2204 2RS**
13,8	20,4	13000	19000	◴	◴	◝	◝	**NK21/16**
17,2	27	13000	19000	◴	◴	◝	◝	**NK21/20**
11,4	16,3	12000	18000	▬	◴	◝	◴	**RNA4903**
8,8	11	9000	-	▬	◴	◝	◴	**RNA4903 2RS**
10,4	15,9	12000	18000	◝	◝	◝	◝	**RNAO22x30x13**
14,2	21,6	12000	18000	◴	◴	◝	◝	**NK22/16**
15,2	21,7	12000	18000	◝	◝	◝	◝	**RNA5903**
17,9	29	12000	18000	◴	◴	◝	◝	**NK22/20**
18,7	30,5	12000	18000	▬	◴	◝	◴	**RNA6903**
15,7	26	9500	15000	◴	◴	◝	◝	**NKI22/16**
19,4	34,5	9500	15000	◴	◴	◝	◝	**NKI22/20**
20	25,5	11000	17000	◝	◝	◝	◝	**RNAO22x35x16**
24,5	30,5	10050	-	◴	◴	◝	◝	**NKS22**
23,3	32	9000	14000	◴	◴	◝	◴	**NA49/22**
26,4	37,5	9500	14000	◝	◝	◝	◝	**NA59/22**
36,9	57	9000	14000	◴	◴	◝	◴	**NA69/22**
11,4	16,3	6000	-	◝	◝	◝	◝	**RNA2203 2RS**
15,4	24,5	10000	16000	◴	◴	◝	◝	**NK24/16**
19	32,5	10000	16000	◴	◴	◝	◝	**NK24/20**
26	33,5	9500	-	◴	◴	◝	◝	**NKS24**
15,1	24,5	10000	16000	◴	◴	◝	◝	**NK25/16**
19	32,5	10000	16000	◴	◴	◝	◝	**NK25/20**
14,9	26	10000	16000	◝	◝	◝	◝	**RNAO25x35x17**
19,4	37	10000	16000	◝	◝	◝	◝	**RNAO25x35x26**
21	28	9500	15000	◝	◝	◝	◝	**RNAO25x37x16**
21,6	28	9500	15000	▬	◴	◝	◴	**RNA4904**
17,3	19,9	7500	-	▬	◴	◝	◴	**RNA4904 2RS**
28,4	37	11000	16000	◝	◝	◝	◝	**RNA5904**

* Other products also available

https://nppnovoteh.com

6. NEEDLE ROLLER BEARINGS AND RELATED BEARINGS

6.1. Solid needle roller bearings – types – NA, NKI, NAO



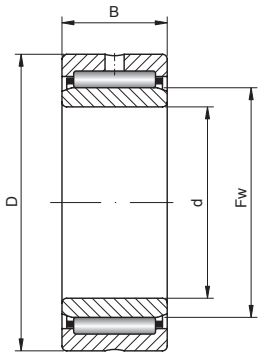

NA 49.. NA 48.. NA 40..
NA 22.. NA 59.. NA 69..
NK.. NKI..

25 – 30 mm

Shaft [mm]	Bearing No.	Inner ring IR	Rows	Dimensions [mm]					Weight [kg]
				d	Fw	Fz	D	B	
25 cont.	**RNA6904**	-	1	25	25	-	37	30	0,1000
	NKI25/20	IR25X29X20	1	25	29	-	38	20	0,0800
	NKS25	-	1	25	25	-	38	20	0,0680
	NKI25/30	IR25X29X30	1	25	29	-	38	30	0,1200
	NAO25x40x17	IR25X30X17	1	25	30	35	40	17	0,0880
	NAO25x42x16	IR25X30X16	1	25	30	37	42	16	0,0860
	NA4905	IR25X30X17	1	25	30	-	42	17	0,0880
	NA4905 2RS	IR25X30X18	1	25	30	-	42	18	0,0900
	NA5905	IR25X30X23	1	25	30	-	42	23	0,1390
	NA6905	IR25X30X30	1	25	30	-	42	30	0,1600
	NAO25x42x32	IR25X30X32	2	25	30	37	42	32	0,1900
	RNA2204 2RS	-	1	25	25	-	47	18	0,1500
	NA4005 V	IR25X34X22	1	25	34	-	47	22	0,2000
	NKIS25	IR25X32X22	1	25	32	-	47	22	0,1600
	NA2205 2RS	IR25X30X18	1	25	30	-	52	18	0,2100
26	**NK26/16**	-	1	26	26	-	34	16	0,0340
	NK26/20	-	1	26	26	-	34	20	0,0420
28	**NK28/20**	-	1	28	28	-	37	20	0,0520
	NK28/30	-	1	28	28	-	37	30	0,0820
	RNA49/22	-	1	28	28	-	39	17	0,0500
	RNA59/22	-	1	28	28	-	39	23	0,0870
	RNA69/22	-	1	28	28	-	39	30	0,0980
	NKI28/20	IR28X32X20	1	28	32	-	42	20	0,0970
	NKS28	-	1	28	28	-	42	20	0,0840
	RNA4004 V	-	1	28	28	-	42	22	0,1240
	NKI28/30	IR28X32X30	1	28	32	-	42	30	0,1500
	NA49/28	IR28X32X17	1	28	32	-	45	17	0,0980
	NA59/28	IR28X32X23	1	28	32	-	45	23	0,1420
	NA69/28	IR28X32X30	1	28	32	-	45	30	0,1800
29	**NK29/20**	-	1	29	29	-	38	20	0,0540
	NK29/30	-	1	29	29	-	38	30	0,0840
30	**NA2206 2RS**	IR30X35X20	1	30	35	-	32	20	0,3200
	RNAO30x40x17	-	1	30	30	35	40	17	0,0600
	NK30/20	-	1	30	30	-	40	20	0,0650
	NK30/30	-	1	30	30	-	40	30	0,0980
	RNAO30x42x16	-	1	30	30	37	42	16	0,0590
	RNA4905	-	1	30	30	-	42	17	0,0610
	RNA4905 2RS	-	1	30	30	-	42	17	0,0600
	RNA5905	-	1	30	30	-	42	23	0,0900
	RNA6905	-	1	30	30	-	42	30	0,1100
	RNAO30x42x32	-	2	30	30	37	42	32	0,1370
	NAO30x45x17	IR30X35X17	1	30	35	40	45	17	0,1020
	NKI30/20	IR30X35X20	1	30	35	-	45	20	0,1100
	NKS30	-	1	30	30	-	45	22	0,1000
	NAO30x45x26	IR30X35X26	2	30	35	40	45	26	0,1570
	NKI30/30	IR30X35X30	1	30	35	-	45	30	0,1700
	NAO30x47x16	IR30X35X16	1	30	35	42	47	16	0,1090
	NA4906	IR30X35X17	1	30	35	-	47	17	0,1000
	NA4906 2RS	IR30X35X18	1	30	35	-	47	18	0,1100
	NAO30x47x18	IR30X35X18	1	30	35	42	47	18	0,1190
	NA5906	IR30X35X23	1	30	35	-	47	23	0,1520
	NA6906	IR30X35X30	1	30	35	-	47	30	0,1900

- warehouse - order - phone

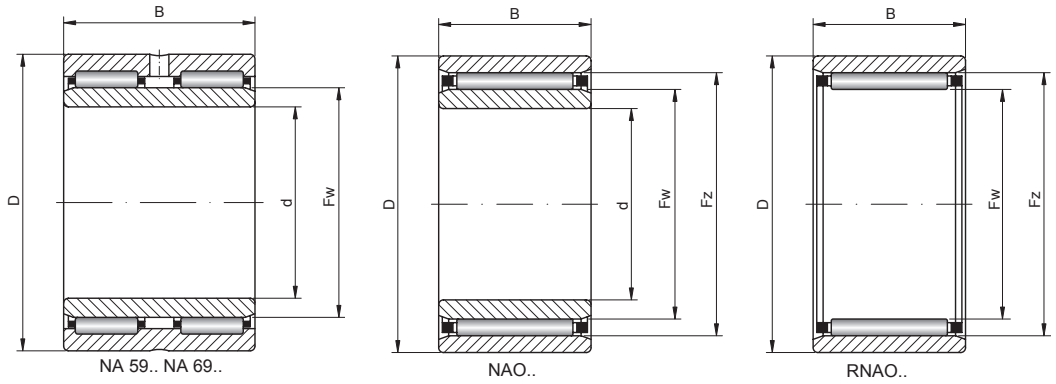

NA 59.. NA 69.. NAO.. RNAO..

Basic load ratings [kN]		Limiting speed [rpm]		Basic makes*				Bearing No.
dyn. C	stat. C_0	grease	oil	-	TN	M	C3	
35,2	53	9500	15000	●	○	◐	○	**RNA6904**
22	36,5	9000	14000	○	○	◐	◐	**NKI25/20**
27,5	36	9500	-	○	○	◐	◐	**NKS25**
31,9	60	9000	14000	○	○	◐	◐	**NKI25/30**
19,6	34	8500	13000	◐	◐	◐	◐	**NAO25x40x17**
23,1	33,5	9000	15000	◐	◐	◐	◐	**NAO25x42x16**
24,2	34,5	8500	13000	●	○	◐	○	**NA4905**
21,6	27,5	6300	-	●	○	◐	○	**NA4905 2RS**
30,5	43	8500	13000	◐	◐	◐	◐	**NA5905**
38	62	8500	13000	●	○	◐	○	**NA6905**
39,5	67	8500	13000	◐	◐	◐	◐	**NAO25x42x32**
19,4	22,4	7500	-	◐	◐	◐	◐	**RNA2204 2RS**
36,2	65,6	3300	5000	●	◐	◐	◐	**NA4005 V**
34,1	46,5	8000	-	○	○	◐	◐	**NKIS25**
21,6	27,5	6300	-	◐	◐	◐	◐	**NA2205 2RS**
15,7	26	9500	15000	○	○	◐	◐	**NK26/16**
19,4	34,5	9500	15000	○	○	◐	◐	**NK26/20**
22	36,5	9000	14000	○	○	◐	◐	**NK28/20**
31,9	60	9000	14000	○	○	◐	◐	**NK28/30**
23,3	32	9000	14000	○	○	◐	○	**RNA49/22**
26,4	37,5	9500	14000	◐	◐	◐	◐	**RNA59/22**
36,9	57	9000	14000	○	○	◐	○	**RNA69/22**
23,3	40,5	8000	12000	○	○	◐	◐	**NKI28/20**
28,6	39	8500	-	○	○	◐	◐	**NKS28**
30,4	55,2	3800	5600	○	◐	◐	◐	**RNA4004 V**
34,1	65,5	8000	12000	○	○	◐	◐	**NKI28/30**
25,1	36,5	8000	12000	○	○	◐	○	**NA49/28**
32	45,5	8500	13000	◐	◐	◐	◐	**NA59/28**
39,6	65,5	8000	12000	○	○	◐	○	**NA69/28**
22	36,5	9000	14000	○	○	◐	◐	**NK29/20**
31,9	60	9000	14000	○	○	◐	◐	**NK29/30**
22,4	32,5	5600	-	◐	◐	◐	◐	**NA2206 2RS**
19,6	34	8500	11000	◐	◐	◐	◐	**RNAO30x40x17**
22,9	38	8500	13000	○	○	◐	◐	**NK30/20**
33	63	8500	13000	○	○	◐	◐	**NK30/30**
23,1	33,5	8500	11000	◐	◐	◐	◐	**RNAO30x42x16**
24,2	34,5	8500	13000	●	○	◐	○	**RNA4905**
19,3	24,2	6500	-	●	○	◐	○	**RNA4905 2RS**
30,5	43	8500	13000	◐	◐	◐	◐	**RNA5905**
38	62	8500	13000	●	○	◐	○	**RNA6905**
39,5	67	8500	13000	◐	◐	◐	◐	**RNAO30x42x32**
20,8	38,5	8500	13000	◐	◐	◐	◐	**NAO30x45x17**
24,6	45	7500	11000	○	○	◐	◐	**NKI30/20**
31,9	43	8000	-	○	○	◐	◐	**NKS30**
27,5	56	8000	12000	◐	◐	◐	◐	**NAO30x45x26**
35,8	72	7500	11000	○	○	◐	◐	**NKI30/30**
24,4	37,5	7500	11000	◐	◐	◐	◐	**NAO30x47x16**
25,5	75	7500	11000	●	○	◐	○	**NA4906**
23,3	32	5600	-	●	○	◐	○	**NA4906 2RS**
27,5	43	7500	11000	◐	◐	◐	◐	**NAO30x47x18**
32,5	48,5	7500	11000	◐	◐	◐	◐	**NA5906**
42,9	75	7500	11000	●	○	◐	○	**NA6906**

* Other products also available

https://nppnovoteh.com

6. NEEDLE ROLLER BEARINGS AND RELATED BEARINGS

6.1. Solid needle roller bearings – types – NA, NKI, NAO



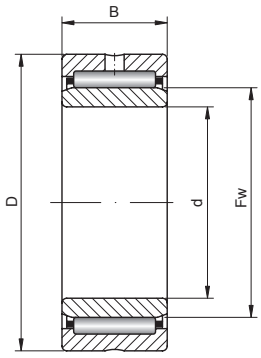

NA 49.. NA 48.. NA 40..
NA 22.. NA 59.. NA 69..
NK.. NKI..

30 – 40 mm

Shaft [mm]	Bearing No.	Inner ring IR	Rows	Dimensions [mm]					Weight [kg]
				d	Fw	Fz	D	B	
30 cont.	**RNA2205 2RS**	-	1	30	30	-	52	18	0,1800
	NKIS30	IR30X37X22	1	30	37	-	52	22	0,1800
	NA4006 V	IR30X40X25	1	30	40	-	55	25	0,3110
32	**NK32/20**	-	1	32	32	-	42	20	0,0680
	NK32/30	-	1	32	32	-	42	30	0,1000
	RNA49/28	-	1	32	32	-	45	17	0,0730
	RNA59/28	-	1	32	32	-	45	23	0,0920
	RNA69/28	-	1	32	32	-	45	30	0,1400
	NKI32/20	IR32X37X20	1	32	37	-	47	20	0,1200
	NKS32	-	1	32	32	-	47	22	0,1100
	NKI32/30	IR32X37X30	1	32	37	-	47	30	0,1800
	NA49/32	IR32X40X20	1	32	40	-	52	20	0,1600
	NA59/32	IR32X40X27	1	32	40	-	52	27	0,2410
	NA69/32	IR32X40X36	2	32	40	-	52	36	0,2900
34	**RNA4005 V**	-	1	34	34	-	47	22	0,1340
35	**RNA2206 2RS**	-	1	35	35	-	62	20	0,2800
	RNAO35x45x13	-	1	35	35	40	45	13	0,0530
	RNAO35x45x17	-	1	35	35	40	45	17	0,0690
	NK35/20	-	1	35	35	-	45	20	0,0740
	RNAO35x45x26	-	2	35	35	40	45	26	0,0910
	NK35/30	-	1	35	35	-	45	30	0,1100
	RNAO35x47x16	-	1	35	35	42	47	16	0,0780
	RNA4906	-	1	35	35	-	47	17	0,0700
	RNA4906 2RS	-	1	35	35	-	47	17	0,0690
	RNAO35x47x18	-	1	35	35	42	47	18	0,0890
	RNA5906	-	1	35	35	-	47	23	0,0990
	RNA6906	-	1	35	35	-	47	30	0,1300
	RNAO35x47x32	-	2	35	35	42	47	32	0,1560
	NAO35x50x17	IR35X40X17	1	35	40	45	50	17	0,1130
	NKI35/20	IR35X40X20	1	35	40	-	50	20	0,1300
	NKS35	-	1	35	35	-	50	22	0,1200
	NKI35/30	IR35X40X30	1	35	40	-	50	30	0,1900
	NA4907	IR35X42X20	1	35	42	-	55	20	0,1700
	NAO35x55x20	IR35X40X20	1	35	40	47	55	20	0,1900
	NA4907 2RS	IR35X42X21	1	35	42	-	55	21	0,1800
	NA5907	IR35X42X27	1	35	42	-	55	27	0,2560
	NA6907	IR35X42X36	2	35	42	-	55	36	0,3100
	NKIS35	IR35X43X22	1	35	43	-	58	22	0,2200
	NA4007 V	IR35X46X27	1	35	46	-	62	27	0,4190
	NA2207 2RS	IR35X42X23	1	35	42	-	72	23	0,5100
37	**NK37/20**	-	1	37	37	-	47	20	0,0770
	NK37/30	-	1	37	37	-	47	30	0,1100
	NKS37	-	1	37	37	-	52	22	0,1200
38	**NK38/20**	-	1	38	38	-	48	20	0,0800
	NK38/30	-	1	38	38	-	48	30	0,1200
	NKI38/20	IR38X43X20	1	38	43	-	53	20	0,1400
	NKI38/30	IR38X43X30	1	38	43	-	53	30	0,2100
40	**RNAO40x50x17**	-	1	40	40	45	50	17	0,0740
	NK40/20	-	1	40	40	-	50	20	0,0830
	NK40/30	-	1	40	40	-	50	30	0,1300

- warehouse - order - phone

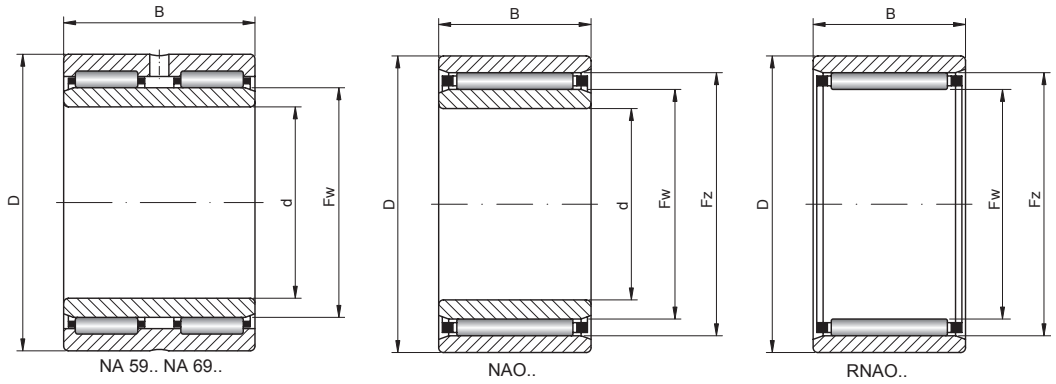

NA 59.. NA 69.. NAO.. RNAO..

Basic load ratings [kN]		Limiting speed [rpm]		Basic makes*				Bearing No.
dyn. C	stat. C_0	grease	oil	-	TN	M	C3	
21,6	27,5	6300	-	✓	✓	✓	✓	**RNA2205 2RS**
36,9	54	7000	-	◴	◴	✓	✓	**NKIS30**
44,7	89,1	2600	4200	▲	✓	✓	✓	**NA4006 V**
23,3	40,5	8000	12000	◴	◴	✓	✓	**NK32/20**
34,1	65,5	8000	12000	◴	◴	✓	✓	**NK32/30**
25,1	36,5	8000	12000	◴	◴	✓	◴	**RNA49/28**
32	45,5	8500	13000	✓	✓	✓	✓	**RNA59/28**
39,6	65,5	8000	12000	◴	◴	✓	◴	**RNA69/28**
25,1	46,5	7500	11000	◴	◴	✓	✓	**NKI32/20**
34,1	46,5	8000	-	◴	◴	✓	✓	**NKS32**
36,9	76,5	7500	11000	◴	◴	✓	✓	**NKI32/30**
30,8	51	7000	10000	◴	◴	✓	◴	**NA49/32**
38	61	6500	11000	✓	✓	✓	✓	**NA59/32**
47,3	90	7000	10000	◴	◴	✓	◴	**NA69/32**
36,2	65,6	3300	5000	◴	✓	✓	✓	**RNA4005 V**
22,4	32,5	5600	-	✓	✓	✓	✓	**RNA2206 2RS**
16,2	28	8000	12000	✓	✓	✓	✓	**RNAO35x45x13**
20,8	38,5	8000	12000	✓	✓	✓	✓	**RNAO35x45x17**
24,6	45	7500	11000	◴	◴	✓	✓	**NK35/20**
27,5	56	8000	12000	✓	✓	✓	✓	**RNAO35x45x26**
35,8	72	7500	11000	◴	◴	✓	✓	**NK35/30**
24,4	37,5	7500	11000	✓	✓	✓	✓	**RNAO35x47x16**
25,5	39	7500	11000	▲	◴	✓	◴	**RNA4906**
21,1	28,5	5500	-	▲	◴	✓	◴	**RNA4906 2RS**
27,5	43	7500	11000	✓	✓	✓	✓	**RNAO35x47x18**
32,5	48,5	7500	11000	✓	✓	✓	✓	**RNA5906**
42,9	75	7500	11000	▲	◴	✓	◴	**RNA6906**
42	75	7500	11000	✓	✓	✓	✓	**RNAO35x47x32**
21,4	41,5	7000	10000	✓	✓	✓	✓	**NAO35x50x17**
26,4	51	7000	10000	◴	◴	✓	✓	**NKI35/20**
35,2	50	7500	-	◴	◴	✓	✓	**NKS35**
38	83	7000	10000	◴	◴	✓	✓	**NKI35/30**
31,9	54	6700	9500	▲	◴	✓	◴	**NA4907**
32,5	57	7000	11000	✓	✓	✓	✓	**NAO35x55x20**
27	43	4800	-	▲	◴	✓	◴	**NA4907 2RS**
39	64,5	6500	9500	✓	✓	✓	✓	**NA5907**
48,4	93	6700	9500	▲	◴	✓	◴	**NA6907**
39,1	61	6300	-	◴	◴	✓	✓	**NKIS35**
52,1	114	2400	3500	▲	✓	✓	✓	**NA4007 V**
28,6	46,5	4800	-	✓	✓	✓	✓	**NA2207 2RS**
25,1	46,5	7500	11000	◴	◴	✓	✓	**NK37/20**
36,9	76,5	7500	11000	◴	◴	✓	✓	**NK37/30**
36,9	54	7000	-	◴	◴	✓	✓	**NKS37**
25,5	49	7500	11000	◴	◴	✓	✓	**NK38/20**
37,4	80	7500	11000	◴	◴	✓	✓	**NK38/30**
27,5	55	6700	9500	◴	◴	✓	✓	**NKI38/20**
40,2	90	6700	9500	◴	◴	✓	✓	**NKI38/30**
21,4	41,5	7000	10000	✓	✓	✓	✓	**RNAO40x50x17**
26,4	51	7000	10000	◴	◴	✓	✓	**NK40/20**
38	83	7000	10000	◴	◴	✓	✓	**NK40/30**

* Other products also available

https://nppnovoteh.com

6. NEEDLE ROLLER BEARINGS AND RELATED BEARINGS

6.1. Solid needle roller bearings – types – NA, NKI, NAO



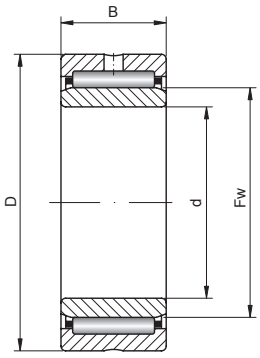

NA 49.. NA 48.. NA 40..
NA 22.. NA 59.. NA 69..
NK.. NKI..

40 – 48 mm

Shaft [mm]	Bearing No.	Inner ring IR	Rows	Dimensions [mm]					Weight [kg]
				d	Fw	Fz	D	B	
40 cont.	**RNAO40x50x34**	-	2	40	40	45	50	34	0,1520
	RNA49/32	-	1	40	40	-	52	20	0,0900
	RNA59/32	-	1	40	40	-	52	27	0,1570
	RNA69/32	-	2	40	40	-	52	36	0,1600
	NAO40x55x17	IR40X45X17	1	40	45	50	55	17	0,1270
	NKI40/20	IR40X45X20	1	40	45	-	55	20	0,1400
	RNAO40x55x20	-	1	40	40	47	55	20	0,1450
	NKS40	-	1	40	40	-	55	22	0,1300
	RNA4006 V	-	1	40	40	-	55	25	0,2020
	NKI40/30	IR40X45X30	1	40	45	-	55	30	0,2200
	RNAO40x55x40	-	2	40	40	48	55	40	0,2750
	NA4908	IR40X48X22	1	40	48	-	62	22	0,2300
	NA4908 2RS	IR40X48X23	1	40	48	-	62	23	0,2500
	NA5908	IR40X48X30	1	40	48	-	62	30	0,3480
	NA6908	IR40X48X40	2	40	48	-	62	40	0,4300
	NKIS40	IR40X50X22	1	40	50	-	65	22	0,2800
	NA4008 V	IR40X52X28	1	40	52	-	68	28	0,4950
	NA2208 2RS	IR40X48X23	1	40	48	-	80	23	0,6300
42	**NK42/20**	-	1	42	42	-	52	20	0,0860
	NK42/30	-	1	42	42	-	52	30	0,1300
	RNA4907	-	1	42	42	-	55	20	0,1100
	RNA4907 2RS	-	1	42	42	-	55	20	0,1070
	RNA5907	-	1	42	42	-	55	27	0,1660
	RNA6907	-	2	42	42	-	55	36	0,1900
	NKI42/20	IR42X47X20	1	42	47	-	57	20	0,1500
	NKI42/30	IR42X47X30	1	42	47	-	57	30	0,2200
	RNA2207 2RS	-	1	42	42	-	72	23	0,4300
43	**NK43/20**	-	1	43	43	-	53	20	0,0860
	NK43/30	-	1	43	43	-	53	30	0,1300
	NKS43	-	1	43	43	-	58	22	0,1400
45	**RNAO45x55x17**	-	1	45	45	50	55	17	0,0830
	NK45/20	-	1	45	45	-	55	20	0,0920
	NK45/30	-	1	45	45	-	55	30	0,1400
	NKS45	-	1	45	45	-	60	22	0,1500
	NKI45/25	IR45X50X25	1	45	50	-	62	25	0,2300
	NKI45/35	IR45X50X35	1	45	50	-	62	35	0,3200
	RNAO45x62x40	-	2	45	45	53	62	40	0,3770
	NA4909	IR45X52X22	1	45	52	-	68	22	0,2700
	NA4909 2RS	IR45X52X23	1	45	52	-	68	23	0,2900
	NA5909	IR45X52X30	1	45	52	-	68	30	0,3960
	NA6909	IR45X52X40	2	45	52	-	68	40	0,5000
	NKIS45	IR45X58X22	1	45	58	-	72	22	0,3400
	NA2209 2RS	IR45X52X23	1	45	52	-	85	23	0,6600
46	**RNA4007 V**	-	1	46	46	-	62	27	0,2720
47	**NK47/20**	-	1	47	47	-	57	20	0,0950
	NK47/30	-	1	47	47	-	57	30	0,1400
48	**RNA4908**	-	1	48	48	-	62	22	0,1400
	RNA4908 2RS	-	1	48	48	-	62	22	0,1540
	RNA5908	-	1	48	48	-	62	30	0,2260
	RNA6908	-	2	48	48	-	62	40	0,2600

- warehouse - order - phone

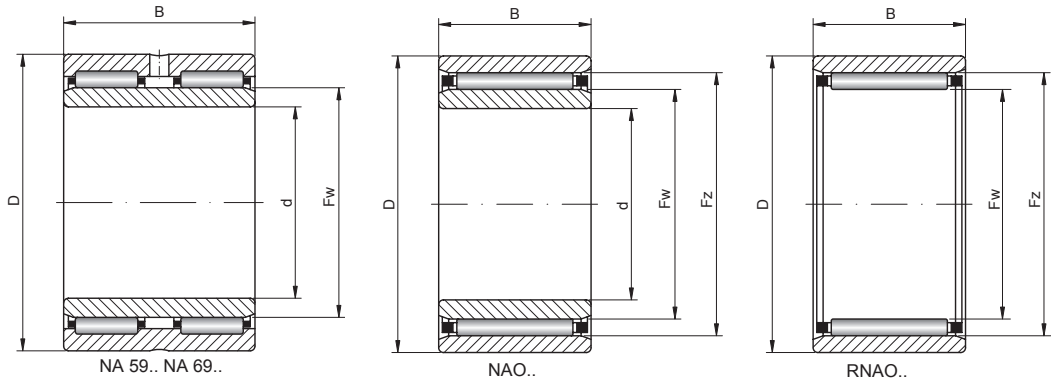

NA 59.. NA 69.. NAO.. RNAO..

Basic load ratings [kN]		Limiting speed [rpm]		Basic makes*				Bearing No.
dyn. C	stat. C_0	grease	oil	-	TN	M	C3	
36,5	83	7000	10000	●	●	●	●	**RNAO40x50x34**
30,8	51	7000	10000	◴	◴	●	◴	**RNA49/32**
38	61	6500	11000	●	●	●	●	**RNA59/32**
47,3	90	7000	10000	◴	◴	●	◴	**RNA69/32**
22,5	46	6300	9000	●	●	●	●	**NAO40x55x17**
27,5	57	6300	9000	◴	◴	●	●	**NKI40/20**
32,5	57	7000	10000	●	●	●	●	**RNAO40x55x20**
38	57	6700	-	◴	◴	●	●	**NKS40**
44,7	89,1	2600	4200	◴	●	●	●	**RNA4006 V**
40,2	93	6300	9000	◴	◴	●	●	**NKI40/30**
62	118	7000	10000	●	●	●	●	**RNAO40x55x40**
42,9	71	5600	8000	■	◴	●	◴	**NA4908**
36,9	58,5	4000	-	■	◴	●	◴	**NA4908 2RS**
53	92,5	5500	8500	●	●	●	●	**NA5908**
67,1	125	5600	8000	■	◴	●	◴	**NA6908**
42,9	72	5600	-	◴	◴	●	●	**NKIS40**
55,2	128	2100	3200	■	●	●	●	**NA4008 V**
36,9	58,5	4000	-	●	●	●	●	**NA2208 2RS**
27	53	6700	9500	◴	◴	●	●	**NK42/20**
39,1	86,5	6700	9500	◴	◴	●	●	**NK42/30**
31,9	54	6700	9500	■	◴	●	◴	**RNA4907**
26,5	39,5	4800	-	■	◴	●	◴	**RNA4907 2RS**
39	64,5	6500	9500	●	●	●	●	**RNA5907**
48,4	93	6700	9500	■	◴	●	◴	**RNA6907**
29,2	61	6000	8500	◴	◴	●	●	**NKI42/20**
41,8	98	6000	8500	◴	◴	●	●	**NKI42/30**
28,6	46,5	4800	-	●	●	●	●	**RNA2207 2RS**
27,5	55	6700	9500	◴	◴	●	●	**NK43/20**
40,2	90	6700	9500	◴	◴	●	●	**NK43/30**
39,1	61	6300	-	◴	◴	●	●	**NKS43**
22,5	46	6300	9000	●	●	●	●	**RNAO45x55x17**
27,5	57	6300	9000	◴	◴	●	●	**NK45/20**
40,2	93	6300	9000	◴	◴	●	●	**NK45/30**
40,2	64	6000	-	◴	◴	●	●	**NKS45**
38	78	5600	8000	◴	◴	●	●	**NKI45/25**
49,5	110	5600	8000	◴	◴	●	●	**NKI45/35**
67	135	6300	9000	●	●	●	●	**RNAO45x62x40**
45,7	78	5300	7500	■	◴	●	◴	**NA4909**
39,1	64	3800	-	■	◴	●	◴	**NA4909 2RS**
56	101	5000	7500	●	●	●	●	**NA5909**
70,4	137	5300	7500	■	◴	●	◴	**NA6909**
44,6	78	5000	-	◴	◴	●	●	**NKIS45**
39,1	64	3800	-	●	●	●	●	**NA2209 2RS**
52,1	114	2400	3500	◴	●	●	●	**RNA4007 V**
29,2	61	6000	8500	◴	◴	●	●	**NK47/20**
41,8	98	6000	8500	◴	◴	●	●	**NK47/30**
42,9	71	5600	8000	■	◴	●	◴	**RNA4908**
36	53	4200	-	■	◴	●	◴	**RNA4908 2RS**
53	92,5	5500	8500	●	●	●	●	**RNA5908**
67,1	125	5600	8000	■	◴	●	◴	**RNA6908**

* Other products also available

6. NEEDLE ROLLER BEARINGS AND RELATED BEARINGS

6.1. Solid needle roller bearings – types – NA, NKI, NAO



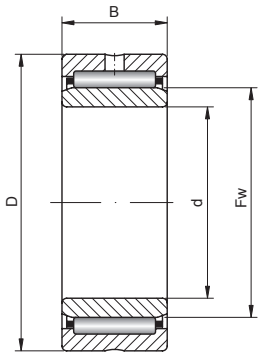

NA 49.. NA 48.. NA 40..
NA 22.. NA 59.. NA 69..
NK.. NKI..

48 – 62 mm

Shaft [mm]	Bearing No.	Inner ring IR	Rows	Dimensions [mm]					Weight [kg]
				d	Fw	Fz	D	B	
48 cont.	**RNA2208 2RS**	-	1	48	48	-	80	23	0,5300
50	**RNAO50x62x20**	-	1	50	50	55	62	20	0,1400
	NK50/25	-	1	50	50	-	62	25	0,1600
	NK50/35	-	1	50	50	-	62	35	0,2200
	RNAO50x65x20	-	1	50	50	58	65	20	0,1680
	NKS50	-	1	50	50	-	65	22	0,1600
	RNAO50x65x40	-	2	50	50	58	65	40	0,3550
	NAO50x68x20	IR50X55X20	1	50	55	60	68	20	0,2300
	NKI50/25	IR50X55X25	1	50	55	-	68	25	0,2700
	NKI50/35	IR50X55X35	1	50	55	-	68	35	0,3800
	NA4910	IR50X58X22	1	50	58	-	72	22	0,2700
	NA4910 2RS	IR50X58X23	1	50	58	-	72	23	0,3000
	NA5910	IR50X58X30	1	50	58	-	72	30	0,4980
	NA6910	IR50X58X40	2	50	58	-	72	40	0,5200
	NKIS50	IR50X60X28	1	50	60	-	80	28	0,5200
	NA4010 V	IR50X62X30	1	50	62	-	80	30	0,6870
	NA2210 2RS	IR50X58X23	1	50	58	-	90	23	0,6900
52	**RNA4909**	-	1	52	52	-	68	22	0,1800
	RNA4909 2RS	-	1	52	52	-	68	22	0,1570
	RNA4008 V	-	1	52	52	-	68	28	0,3060
	RNA5909	-	1	52	52	-	68	30	0,2570
	RNA6909	-	2	52	52	-	68	40	0,3400
	RNA2209 2RS	-	1	52	52	-	85	23	0,5500
55	**RNAO55x68x20**	-	1	55	55	60	68	20	0,1660
	NK55/25	-	1	55	55	-	68	25	0,1800
	NK55/35	-	1	55	55	-	68	35	0,2500
	NKS55	-	1	55	55	-	72	22	0,2200
	NKI55/25	IR55X60X25	1	55	60	-	72	25	0,2700
	NKI55/35	IR55X60X35	1	55	60	-	72	35	0,3800
	NA4911	IR55X63X25	1	55	63	-	80	25	0,4000
	NA5911	IR55X63X34	1	55	63	-	80	34	0,5590
	NA6911	IR55X63X45	2	55	63	-	80	45	0,7800
	NKIS55	IR55X65X28	1	55	65	-	85	28	0,5600
58	**RNA4910**	-	1	58	58	-	72	22	0,1600
	RNA4910 2RS	-	1	58	58	-	72	22	0,1600
	RNA5910	-	1	58	58	-	72	30	0,3240
	RNA6910	-	2	58	58	-	72	40	0,3100
	RNA2210 2RS	-	1	58	58	-	90	23	0,5600
60	**NK60/25**	-	1	60	60	-	72	25	0,1900
	NK60/35	-	1	60	60	-	72	35	0,2600
	RNAO60x78x20	-	1	60	60	68	78	20	0,2550
	RNAO60x78x40	-	2	60	60	68	78	40	0,4350
	NKS60	-	1	60	60	-	80	28	0,3400
	NKI60/25	IR60X68X25	1	60	68	-	82	25	0,4000
	NKI60/35	IR60X68X35	1	60	68	-	82	35	0,5500
	NA4912	IR60X68X25	1	60	68	-	85	25	0,4300
	NA5912	IR60X68X34	1	60	68	-	85	34	0,6140
	NA6912	IR60X68X45	2	60	68	-	85	45	0,8100
	NKIS60	IR60X70X28	1	60	70	-	90	28	0,5600
62	**RNA4010 V**	-	1	62	62	-	80	30	0,4400

- warehouse - order - phone

https://nppnovoteh.com

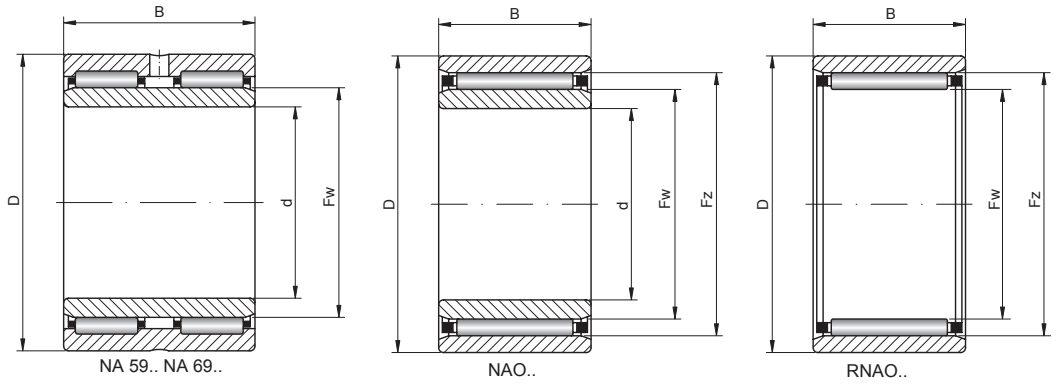

NA 59.. NA 69.. NAO.. RNAO..

Basic load ratings [kN]		Limiting speed [rpm]		Basic makes*				Bearing No.
dyn. C	stat. C_0	grease	oil	-	TN	M	C3	
36,9	58,5	4000	-	●	●	●	●	**RNA2208 2RS**
26,5	60	6000	8500	●	●	●	●	**RNAO50x62x20**
38	78	5600	8000	◴	◴	●	●	**NK50/25**
49,5	110	5600	8000	◴	◴	●	●	**NK50/35**
35,5	62	5600	8000	●	●	●	●	**RNAO50x65x20**
42,9	72	5600	-	◴	◴	●	●	**NKS50**
61	124	5600	8000	●	●	●	●	**RNAO50x65x40**
28,5	66	5300	7500	●	●	●	●	**NAO50x68x20**
40,2	88	5300	7500	◴	◴	●	●	**NKI50/25**
52,3	122	5300	7500	◴	◴	●	●	**NKI50/35**
47,3	85	5000	7500	▬	◴	●	◴	**NA4910**
40,2	69,5	3400	-	▬	◴	●	◴	**NA4910 2RS**
58	110	4700	7000	●	●	●	●	**NA5910**
73,7	150	5000	7000	▬	◴	●	◴	**NA6910**
62,7	104	4500	-	◴	◴	●	●	**NKIS50**
59,6	153	1800	2700	▬	●	●	●	**NA4010 V**
40,2	69,5	3400	-	●	●	●	●	**NA2210 2RS**
45,7	78	5300	7500	▬	◴	●	◴	**RNA4909**
38	59	3900	-	▬	◴	●	◴	**RNA4909 2RS**
55,2	128	2100	3200	◴	●	●	●	**RNA4008 V**
56	101	5000	7500	●	●	●	●	**RNA5909**
70,4	137	5300	7500	▬	◴	●	◴	**RNA6909**
39,1	64	3800	-	●	●	●	●	**RNA2209 2RS**
28,5	66	5300	7500	●	●	●	●	**RNAO55x68x20**
40,2	88	5300	7500	◴	◴	●	●	**NK55/25**
52,3	122	5300	7500	◴	◴	●	●	**NK55/35**
44,6	78	5000	-	◴	◴	●	●	**NKS55**
41,8	96,5	4800	6700	◴	◴	●	●	**NKI55/25**
55	134	4800	6700	◴	◴	●	●	**NKI55/35**
57,2	106	4500	6300	▬	◴	●	◴	**NA4911**
76,5	140	4300	6500	●	●	●	●	**NA5911**
89,7	190	4500	6300	▬	◴	●	◴	**NA6911**
66	114	4300	-	◴	◴	●	●	**NKIS55**
47,3	85	5000	7000	▬	◴	●	◴	**RNA4910**
40	64	3500	-	▬	◴	●	◴	**RNA4910 2RS**
58	110	4700	7000	●	●	●	●	**RNA5910**
73,7	150	5000	7000	▬	◴	●	◴	**RNA6910**
40,2	69,5	3400	-	●	●	●	●	**RNA2210 2RS**
41,8	96,5	4800	6700	◴	◴	●	●	**NK60/25**
55	134	4800	6700	◴	◴	●	●	**NK60/35**
43,5	85	4800	6700	●	●	●	●	**RNAO60x78x20**
75	171	4800	6700	●	●	●	●	**RNAO60x78x40**
62,7	104	4500	-	◴	◴	●	●	**NKS60**
44	95	4300	6000	◴	◴	●	●	**NKI60/25**
60,5	146	4300	6000	◴	◴	●	●	**NKI60/35**
60,5	114	4300	6000	▬	◴	●	◴	**NA4912**
80,5	153	4000	6000	●	●	●	●	**NA5912**
93,5	204	4300	6000	▬	●	◴	◴	**NA6912**
68,2	120	4000	-	◴	◴	●	●	**NKIS60**
59,6	153	1800	2700	◴	●	●	●	**RNA4010 V**

* Other products also available

https://nppnovoteh.com

6. NEEDLE ROLLER BEARINGS AND RELATED BEARINGS

6.1. Solid needle roller bearings – types – NA, NKI, NAO



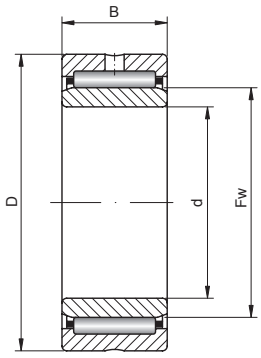

NA 49.. NA 48.. NA 40..
NA 22.. NA 59.. NA 69..
NK.. NKI..

63 – 80 mm

Shaft [mm]	Bearing No.	Inner ring IR	Rows	Dimensions [mm]					Weight [kg]
				d	Fw	Fz	D	B	
63	**RNA4911**	-	1	63	63	-	80	25	0,2600
	RNA5911	-	1	63	63	-	80	34	0,3630
	RNA6911	-	2	63	63	-	80	45	0,4700
65	**NK65/25**	-	1	65	65	-	78	25	0,2200
	NK65/35	-	1	65	65	-	78	35	0,3100
	NKS65	-	1	65	65	-	85	28	0,3600
	RNAO65x85x30	-	1	65	65	73	85	30	0,4640
	NA4913	IR65X72X25	1	65	72	-	90	25	0,4600
	NKI65/25	IR65X73X25	1	65	73	-	90	25	0,4700
	NA5913	IR65X72X34	1	65	72	-	90	34	0,6550
	NKI65/35	IR65X73X35	1	65	73	-	90	35	0,6600
	NA6913	IR65X72X45	2	65	72	-	90	45	0,8300
	NKIS65	IR65X75X28	1	65	75	-	95	28	0,6400
68	**NK68/25**	-	1	68	68	-	82	25	0,2400
	NK68/35	-	1	68	68	-	82	35	0,3400
	RNA4912	-	1	68	68	-	85	25	0,2800
	RNA5912	-	1	68	68	-	85	34	0,3990
	RNA6912	-	2	68	68	-	85	45	0,4900
70	**NK70/25**	-	1	70	70	-	85	25	0,2600
	NK70/35	-	1	70	70	-	85	35	0,3700
	NKS70	-	1	70	70	-	90	28	0,3800
	RNAO70x90x30	-	1	70	70	78	90	30	0,4990
	NKI70/25	IR70X80X25	1	70	80	-	95	25	0,5200
	NKI70/35	IR70X80X35	1	70	80	-	95	35	0,7400
	NA4914	IR70X80X30	1	70	80	-	100	30	0,7300
	NAO70x100x30	IR70X80X30	1	70	80	88	100	30	0,8500
	NA5914	IR70X80X40	1	70	80	-	100	40	1,0600
	NA6914	IR70X80X54	2	70	80	-	100	54	1,3500
72	**RNA4913**	-	1	72	72	-	90	25	0,3100
	RNA5913	-	1	72	72	-	90	34	0,4260
	RNA6913	-	2	72	72	-	90	45	0,5800
	NK73/25	-	1	73	73	-	90	25	0,3000
	NK73/35	-	1	73	73	-	90	35	0,4200
75	**NK75/25**	-	1	75	75	-	92	25	0,3200
	NK75/35	-	1	75	75	-	92	35	0,4500
	NKS75	-	1	75	75	-	95	28	0,4000
	NKI75/25	IR75X85X25	1	75	85	-	105	25	0,6400
	NA4915	IR75X85X30	1	75	85	-	105	30	0,7800
	NKI75/35	IR75X85X35	1	75	85	-	105	35	0,9100
	NA5915	IR75X85X40	1	75	85	-	105	40	1,1300
	NA6915	IR75X85X54	2	75	85	-	105	54	1,4500
80	**NK80/25**	-	1	80	80	-	95	25	0,3000
	NK80/35	-	1	80	80	-	95	35	0,4300
	RNA4914	-	1	80	80	-	100	30	0,4600
	RNAO80x100x30	-	1	80	80	88	100	30	0,5800
	RNA5914	-	1	80	80	-	100	40	0,6890
	RNA6914	-	2	80	80	-	100	54	0,8600
	NKI80/25	IR80X90X25	1	80	90	-	110	25	0,6800
	NA4916	IR80X90X30	1	80	90	-	110	30	0,8800

- warehouse - order - phone

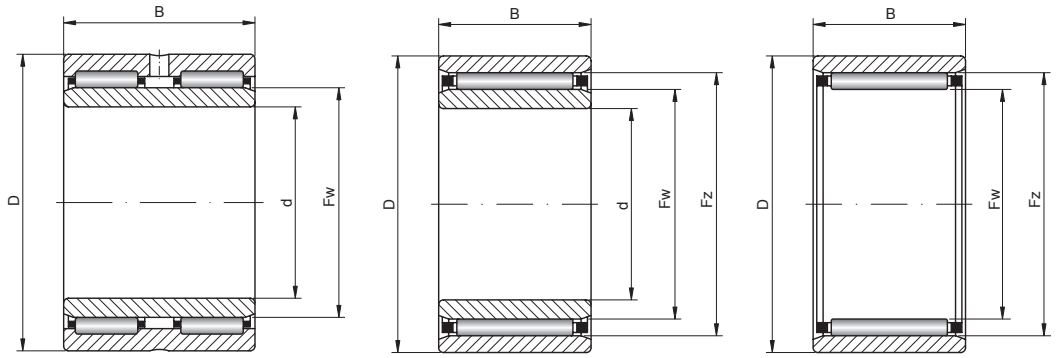

NA 59.. NA 69.. NAO.. RNAO..

Basic load ratings [kN]		Limiting speed [rpm]		Basic makes*				Bearing No.
dyn. C	stat. C_0	grease	oil	-	TN	M	C3	
57,2	106	4500	6300					**RNA4911**
76,5	140	4300	6500					**RNA5911**
89,7	190	4500	6300					**RNA6911**
44	104	4500	6300					**NK65/25**
58,3	146	4500	6300					**NK65/35**
66	114	4300	-					**NKS65**
57	123	4500	6300					**RNAO65x85x30**
61,6	120	4000	5600					**NA4913**
52,8	106	4000	5600					**NKI65/25**
84	165	3700	5500					**NA5913**
73,7	163	4000	5600					**NKI65/35**
95,2	212	4000	5600					**NA6913**
70,4	132	3800	-					**NKIS65**
44	95	4300	6000					**NK68/25**
60,5	146	4300	6000					**NK68/35**
60,5	114	4300	6000					**RNA4912**
80,5	153	4000	6000					**RNA5912**
93,5	204	4300	6000					**RNA6912**
44,6	98	4300	6000					**NK70/25**
61,6	150	4300	6000					**NK70/35**
68,2	120	4000	-					**NKS70**
60	135	4300	6000					**RNAO70x90x30**
56,1	127	3600	5000					**NKI70/25**
76,5	190	3600	5000					**NKI70/35**
84,2	163	3600	5000					**NA4914**
71	176	3600	5000					**NAO70x100x30**
103	187	3300	5000					**NA5914**
128	285	3600	5000					**NA6914**
61,6	120	4000	5600					**RNA4913**
84	165	3700	5500					**RNA5913**
95,2	212	4000	5600					**RNA6913**
52,8	106	4000	56000					**NK73/25**
73,7	163	4000	56000					**NK73/35**
53,9	110	3800	5300					**NK75/25**
74,8	170	3800	5300					**NK75/35**
70,4	132	3800	-					**NKS75**
69,3	132	3400	4800					**NKI75/25**
84,2	170	3400	4800					**NA4915**
96,8	20	3400	4800					**NKI75/35**
109	205	3100	4700					**NA5915**
130	290	3400	4800					**NA6915**
56,1	127	3600	5000					**NK80/25**
76,5	190	3600	5000					**NK80/35**
84,2	163	3600	5000					**RNA4914**
71	176	3600	5000					**RNAO80x100x30**
103	187	3600	5000					**RNA5914**
128	285	3600	5000					**RNA6914**
72,1	140	3200	4500					**NKI80/25**
88	183	3200	4500					**NA4916**

* Other products also available

https://nppnovoteh.com

6. NEEDLE ROLLER BEARINGS AND RELATED BEARINGS

6.1. Solid needle roller bearings – types – NA, NKI, NAO



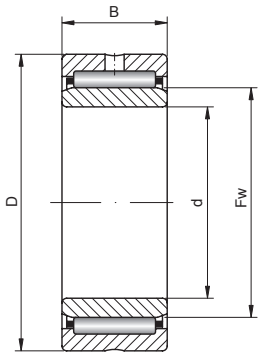

NA 49.. NA 48.. NA 40..
NA 22.. NA 59.. NA 69..
NK.. NKI..

80 – 110 mm

Shaft [mm]	Bearing No.	Inner ring IR	Rows	Dimensions [mm]					Weight [kg]
				d	Fw	Fz	D	B	
80 cont.	**NAO80x110x30**	IR80X90X30	1	80	90	98	110	30	0,9200
	NKI80/35	IR80X90X35	1	80	90	-	110	35	0,9600
	NA5916	IR80X90X40	1	80	90	-	110	40	1,1500
	NA6916	IR80X90X54	2	80	90	-	110	54	1,5000
85	**NK85/25**	-	1	85	85	-	105	25	0,4300
	RNA4915	-	1	85	85	-	105	30	0,6000
	NK85/35	-	1	85	85	-	105	35	0,4900
	RNA5915	-	1	85	85	-	105	40	0,7350
	RNA6915	-	2	85	85	-	105	54	0,9400
	NKI85/26	IR85X95X26	1	85	95	-	115	26	0,7500
	NKI85/36	IR85X95X36	1	85	95	-	115	36	1,0500
	NA4917	IR85X100X35	1	85	100	-	120	35	1,2500
	NA5917	IR85X100X46	1	85	100	-	120	46	1,7600
	NA6917	IR85X100X63	2	85	100	-	120	63	2,2000
90	**RNAO90x105x26**	-	1	90	90	98	105	26	0,3730
	NK90/25	-	1	90	90	-	110	25	0,4500
	RNA4916	-	1	90	90	-	110	30	0,5200
	RNAO90x110x30	-	1	90	90	98	110	30	0,6100
	NK90/35	-	1	90	90	-	110	35	0,6300
	RNA5916	-	1	90	90	-	110	40	0,7480
	RNA6916	-	2	90	90	-	110	54	1,0000
	NKI90/26	IR90X100X26	1	90	100	-	120	26	0,7800
	NAO90x120x30	IR90X100X30	1	90	100	108	120	30	1,0440
	NKI90/36	IR90X100X36	1	90	100	-	120	36	1,1000
	NA4918	IR90X105X35	1	90	105	-	125	35	1,3000
	NA5918	IR90X105X46	1	90	105	-	125	46	1,8400
	NA6918	IR90X105X63	2	90	105	-	125	63	2,3000
95	**NK95/26**	-	1	95	95	-	115	26	0,4900
	NK95/36	-	1	95	95	-	115	36	0,6800
	NKI95/26	IR95X105X26	1	95	105	-	125	26	0,8200
	NKI95/36	IR95X105X36	1	95	105	-	125	36	1,1500
	NA4919	IR95X110X35	1	95	110	-	130	35	1,4000
	NA5919	IR95X110X46	1	95	110	-	130	46	1,9800
	NA6919	IR95X110X63	2	95	110	-	130	63	2,5000
100	**NK100/26**	-	1	100	100	-	120	26	0,5200
	RNAO100x120x30	-	1	100	100	108	120	30	0,6940
	RNA4917	-	1	100	100	-	120	35	0,6600
	NK100/36	-	1	100	100	-	120	36	0,7200
	RNA5917	-	1	100	100	-	120	46	1,1440
	RNA6917	-	2	100	100	-	120	63	1,2000
	NKI100/30	IR100X110X30	1	100	110	-	130	30	1,0000
	NKI100/40	IR100X110X40	1	100	110	-	130	40	1,3500
	NA4920	IR100X115X40	1	100	115	-	140	40	1,9000
	NA5920	IR100X115X54	1	100	115	-	140	54	2,8500
105	**NK105/26**	-	1	105	105	-	125	26	0,5400
	RNA4918	-	1	105	105	-	125	35	0,7500
	NK105/36	-	1	105	105	-	125	36	0,8000
	RNA5918	-	1	105	105	-	125	46	1,1960
	RNA6918	-	2	105	105	-	125	63	1,3500
110	**NK110/30**	-	1	110	110	-	130	30	0,6500

- warehouse - order - phone

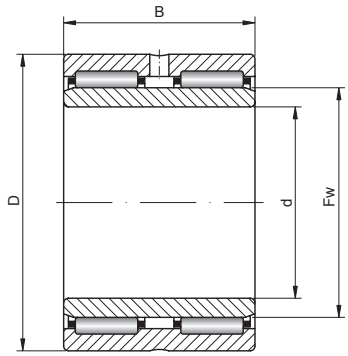

NA 59.. NA 69..

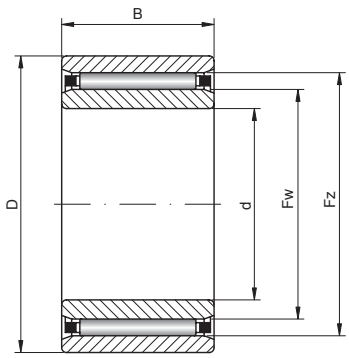

NAO..

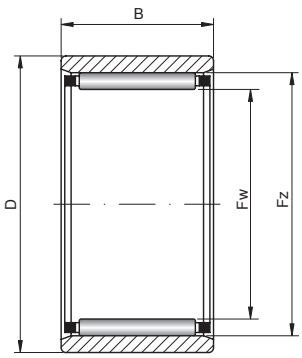

RNAO..

Basic load ratings [kN]		Limiting speed [rpm]		Basic makes*				Bearing No.
dyn. C	stat. C_0	grease	oil	-	TN	M	C3	
68	172	3200	4500	●	●	●	●	**NAO80x110x30**
101	216	3200	4500	◴	◴	●	●	**NKI80/35**
115	223	2900	4400	●	●	●	●	**NA5916**
134	315	3200	4500	◴	●	◴	◴	**NA6916**
69,3	132	3400	4800	◴	◴	●	●	**NK85/25**
84,2	170	3400	4800	▬	●	◴	◴	**RNA4915**
96,8	200	3400	4800	◴	◴	●	●	**NK85/35**
109	205	3100	4700	●	●	●	●	**RNA5915**
130	290	3400	4800	◴	●	●	◴	**RNA6915**
73,7	146	3000	4300	◴	◴	●	●	**NKI85/26**
105	232	3000	4300	◴	◴	●	●	**NKI85/36**
108	250	2800	4000	▬	●	◴	◴	**NA4917**
137	290	2700	4000	●	●	●	●	**NA5917**
165	425	2800	4000	◴	●	◴	◴	**NA6917**
61	150	3200	4500	●	●	●	●	**RNAO90x105x26**
72,1	140	3200	4500	◴	◴	●	●	**NK90/25**
88	183	3200	4500	▬	●	◴	◴	**RNA4916**
68	172	3200	4500	●	●	●	●	**RNAO90x110x30**
101	216	3200	4500	◴	◴	●	●	**NK90/35**
115	223	2900	4400	●	●	●	●	**RNA5916**
134	315	3200	4500	◴	●	●	◴	**RNA6916**
76,5	156	2800	4000	◴	◴	●	●	**NKI90/26**
71	188	2800	4000	●	●	●	●	**NAO90x120x30**
108	250	2800	4000	◴	◴	●	●	**NKI90/36**
112	265	2600	3800	▬	●	◴	◴	**NA4918**
143	310	2500	3800	●	●	●	●	**NA5918**
172	450	2600	3800	◴	●	◴	◴	**NA6918**
73,7	146	3000	4300	◴	◴	●	●	**NK95/26**
105	232	3000	4300	◴	◴	●	●	**NK95/36**
78,1	166	2600	3800	◴	◴	●	●	**NKI95/26**
112	265	2600	3800	◴	◴	●	●	**NKI95/36**
114	270	2400	3600	▬	●	◴	◴	**NA4919**
149	335	2400	3600	●	●	●	●	**NA5919**
172	465	2400	3600	◴	●	◴	◴	**NA6919**
76,5	156	2800	4000	●	●	●	●	**NK100/26**
71	188	2800	3900	●	●	●	●	**RNAO100x120x30**
108	250	2800	4000	▬	●	◴	◴	**RNA4917**
108	250	2800	4000	●	●	●	●	**NK100/36**
137	290	2700	4000	●	●	●	●	**RNA5917**
165	425	2800	4000	◴	●	●	◴	**RNA6917**
96,8	220	2400	3600	●	●	●	●	**NKI100/30**
123	305	2400	3600	●	●	●	●	**NKI100/40**
125	280	2200	3400	▬	●	◴	◴	**NA4920**
182	395	2300	3500	●	●	●	●	**NA5920**
78,1	166	2600	3800	●	●	●	●	**NK105/26**
112	265	2600	3800	▬	●	◴	◴	**RNA4918**
112	265	2600	3800	●	●	●	●	**NK105/36**
143	310	2500	3800	●	●	●	●	**RNA5918**
172	450	2600	3800	◴	●	●	◴	**RNA6918**
96,8	220	2400	3600	●	●	●	●	**NK110/30**

* Other products also available

https://nppnovoteh.com

6. NEEDLE ROLLER BEARINGS AND RELATED BEARINGS

6.1. Solid needle roller bearings – types – NA, NKI, NAO



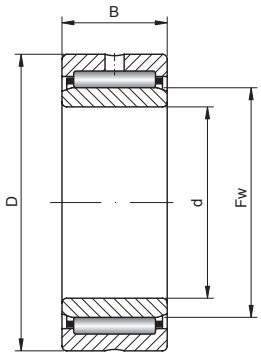

NA 49.. NA 48.. NA 40..
NA 22.. NA 59.. NA 69..
NK.. NKI..

110 – 180 mm

Shaft [mm]	Bearing No.	Inner ring IR	Rows	Dimensions [mm]					Weight [kg]
				d	Fw	Fz	D	B	
110 cont.	**RNA4919**	-	1	110	110	-	130	35	0,7200
	NK110/40	-	1	110	110	-	130	40	0,8300
	RNA5919	-	1	110	110	-	130	46	1,2870
	RNA6919	-	2	110	110	-	130	63	1,4500
	NA4822	IR110X120X30	1	110	120	-	140	30	1,1000
	NA4922	IR110X125X40	1	110	125	-	150	40	2,1000
	NA5922	IR110X125X54	1	110	125	-	150	54	2,9800
115	**RNA4920**	-	1	115	115	-	140	40	1,2000
	RNA5920	-	1	115	115	-	140	54	1,8530
120	**RNA4822**	-	1	120	120	-	140	30	0,6700
	NA4824	IR120X130X30	1	120	130	-	150	30	1,1500
	NA4924	IR120X135X45	1	120	135	-	165	45	2,8500
	NA5924	IR120X135X60	1	120	135	-	165	60	3,9200
125	**RNA4922**	-	1	125	125	-	150	40	1,2500
	RNA5922	-	1	125	125	-	150	54	1,9370
130	**RNA4824**	-	1	130	130	-	150	30	0,7300
	NA4826	IR130X145X35	1	130	145	-	165	35	1,8000
	NA4926	IR130X150X50	1	130	150	-	180	50	3,9000
	NA5926	IR130X150X67	1	130	150	-	180	67	5,6000
135	**RNA4924**	-	1	135	135	-	165	45	1,8500
	RNA5924	-	1	135	135	-	165	60	2,5480
140	**NA4828**	IR140X155X35	1	140	155	-	175	35	1,9500
	NA4928	IR140X160X50	1	140	160	-	190	50	4,1500
	NA5928	IR140X160X67	1	140	160	-	190	67	6,1800
145	**RNA4826**	-	1	145	145	-	165	35	1,0000
150	**RNA4926**	-	1	150	150	-	180	50	2,2000
	RNA5926	-	1	150	150	-	180	67	3,6400
	NA4830	IR150X165X40	1	150	165	-	190	40	2,7000
	NA4930	IR150X170X60	1	150	170	-	210	60	5,3300
155	**RNA4828**	-	1	155	155	-	175	35	1,0500
160	**RNA4928**	-	1	160	160	-	190	50	2,3500
	RNA5928	-	1	160	160	-	190	67	4,0170
	NA4832	IR160X175X40	1	160	175	-	200	40	2,9000
	NA4932	IR160X180X60	1	160	180	-	220	60	5,6000
165	**RNA4830**	-	1	165	165	-	190	40	1,6000
170	**RNA4930**	-	1	170	170	-	210	60	3,5000
	NA4834	IR170X185X45	1	170	185	-	215	45	4,0000
	NA4934	IR170X190X60	1	170	190	-	230	60	5,8700
175	**RNA4832**	-	1	175	175	-	200	40	1,7000
180	**RNA4932**	-	1	180	180	-	220	60	3,6000
	NA4836	IR180X195X45	1	180	195	-	225	45	4,2000
	NA4936	IR180X205X69	1	180	205	-	250	69	8,5800

- warehouse - order - phone

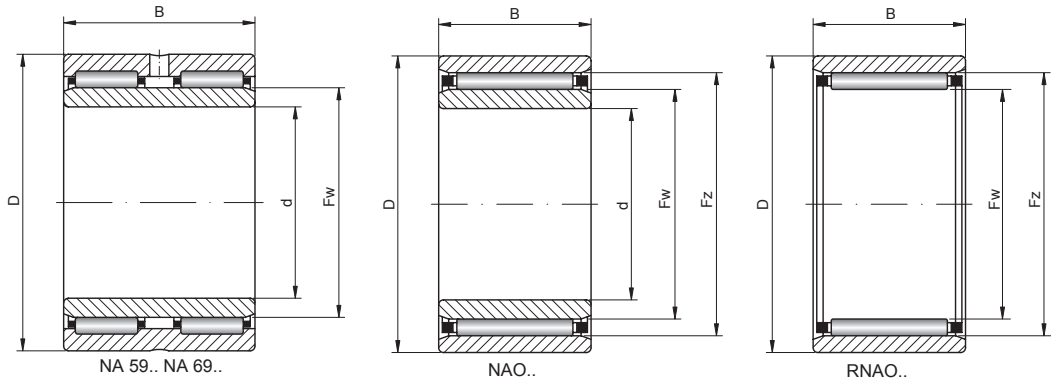

NA 59.. NA 69.. NAO.. RNAO..

Basic load ratings [kN]		Limiting speed [rpm]		Basic makes*				Bearing No.
dyn. C	stat. C_0	grease	oil	-	TN	M	C3	
114	270	2400	3600	●	○	○	○	**RNA4919**
123	305	2400	3600	○	○	○	○	**NK110/40**
149	335	2400	3600	○	○	○	○	**RNA5919**
172	465	2400	3600	○	○	○	○	**RNA6919**
93,5	232	2200	3400	○	○	○	○	**NA4822**
130	300	2000	3200	●	○	○	○	**NA4922**
193	440	2100	3200	○	○	○	○	**NA5922**
125	280	2200	3400	●	○	○	○	**RNA4920**
182	395	2300	3500	○	○	○	○	**RNA5920**
93,5	232	2200	3400	○	○	○	○	**RNA4822**
99	255	2000	3200	○	○	○	○	**NA4824**
176	405	1900	3000	●	○	○	○	**NA4924**
245	525	2000	3000	○	○	○	○	**NA5924**
130	300	2000	3200	○	○	○	○	**RNA4922**
193	440	2100	3200	○	○	○	○	**RNA5922**
99	255	2000	3200	○	○	○	○	**RNA4824**
119	325	1800	2800	○	○	○	○	**NA4826**
198	480	1700	2600	●	○	○	○	**NA4926**
294	685	1800	2700	○	○	○	○	**NA5926**
176	405	1900	3000	○	○	○	○	**RNA4924**
245	525	2000	3000	○	○	○	○	**RNA5924**
121	345	1700	2600	○	○	○	○	**NA4828**
205	510	1600	2400	○	○	○	○	**NA4928**
310	755	1700	2500	○	○	○	○	**NA5928**
119	325	1800	2800	○	○	○	○	**RNA4826**
198	480	1700	2600	○	○	○	○	**RNA4926**
294	685	1800	2700	○	○	○	○	**RNA5926**
147	415	1600	2400	○	○	○	○	**NA4830**
261	610	1600	2400	○	○	○	○	**NA4930**
121	345	1700	2600	○	○	○	○	**RNA4828**
205	510	1600	2400	○	○	○	○	**RNA4928**
310	755	1700	2500	○	○	○	○	**RNA5928**
157	450	1500	2200	○	○	○	○	**NA4832**
270	650	1500	2200	○	○	○	○	**NA4932**
147	415	1600	2400	○	○	○	○	**RNA4830**
261	610	1600	2400	○	○	○	○	**RNA4930**
179	520	1500	2200	○	○	○	○	**NA4834**
279	690	1400	2100	○	○	○	○	**NA4934**
157	450	1500	2200	○	○	○	○	**RNA4832**
270	650	1500	2200	○	○	○	○	**RNA4932**
190	570	1400	2000	○	○	○	○	**NA4836**
375	890	1300	2000	○	○	○	○	**NA4936**

* Other products also available

https://nppnovoteh.com

6. NEEDLE ROLLER BEARINGS AND RELATED BEARINGS

6.1. Solid needle roller bearings – types – NA, NKI, NAO



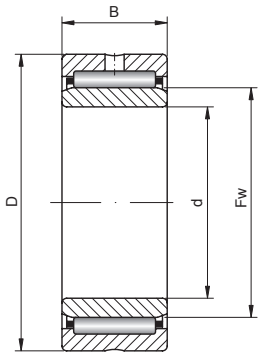

NA 49.. NA 48.. NA 40..
NA 22.. NA 59.. NA 69..
NK.. NKI..

185 – 340 mm

Shaft [mm]	Bearing No.	Inner ring IR	Rows	Dimensions [mm]					Weight [kg]
				d	Fw	Fz	D	B	
185	**RNA4834**	-	1	185	185	-	215	45	2,5500
190	**RNA4934**	-	1	190	190	-	230	60	3,8000
	NA4838	IR190X210X50	1	190	210	-	240	50	5,6000
	NA4938	IR190X215X69	1	190	215	-	260	69	8,6800
195	**RNA4836**	-	1	195	195	-	225	45	2,7000
200	**NA4840**	IR200X220X50	1	200	220	-	250	50	5,8500
	NA4940	IR200X225X80	1	200	225	-	280	80	12,2000
205	**RNA4936**	-	1	205	205	-	250	69	5,6000
210	**RNA4838**	-	1	210	210	-	240	50	3,2000
215	**RNA4938**	-	1	215	215	-	260	69	5,6000
220	**RNA4840**	-	1	220	220	-	250	50	3,3500
	NA4844	IR220X240X50	1	220	240	-	270	50	6,4000
	NA4944	IR220X245X80	1	220	245	-	300	80	13,5000
225	**RNA4940**	-	1	225	225	-	280	80	7,9000
240	**RNA4844**	-	1	240	240	-	270	50	3,6000
	NA4848	IR240X265X60	1	240	265	-	300	60	10,0000
	NA4948	IR240X265X80	1	240	265	-	320	80	14,7000
245	**RNA4944**	-	1	245	245	-	300	80	8,8000
260	**NA4852**	IR260X285X60	1	260	285	-	320	60	10,5000
	NA4952	IR260X290X100	1	260	290	-	360	100	25,9000
265	**RNA4848**	-	1	265	265	-	300	60	5,4000
	RNA4948	-	1	265	265	-	320	80	9,6000
280	**NA4856**	IR280X305X69	1	280	305	-	350	69	15,5000
	NA4956	IR280X310X100	1	280	310	-	380	100	27,5000
285	**RNA4852**	-	1	285	285	-	320	60	5,8000
290	**RNA4952**	-	1	290	290	-	360	100	16,8000
300	**NA4860**	IR300X330X80	1	300	330	-	380	80	22,0000
	NA4960	IR300X340X118	1	300	340	-	420	118	42,5000
305	**RNA4856**	-	1	305	305	-	350	69	9,3000
310	**RNA4956**	-	1	310	310	-	380	100	17,9000
320	**NA4864**	IR320X350X80	1	320	350	-	400	80	23,0000
	NA4964	IR320X360X118	1	320	360	-	440	118	45,2000
	RNA4860	-	1	330	330	-	380	80	13,0000
340	**NA4868**	IR340X370X80	1	340	370	-	420	80	24,0000
	RNA4960	-	1	340	340	-	420	118	27,6000
	NA4968	IR340X380X118	1	340	380	-	460	118	47,3000

- warehouse - order - phone

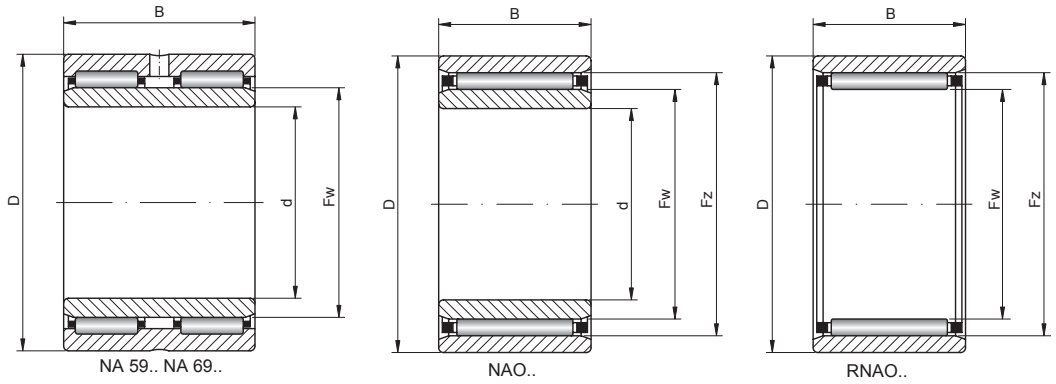

NA 59.. NA 69.. NAO.. RNAO..

Basic load ratings [kN]		Limiting speed [rpm]		Basic makes*				Bearing No.
dyn. C	stat. C_0	grease	oil	-	TN	M	C3	
179	520	1500	2200	✓	✓	✓	✓	**RNA4834**
279	690	1400	2100	✓	✓	✓	✓	**RNA4934**
220	710	1300	1900	✓	✓	✓	✓	**NA4838**
390	945	1300	1900	◴	✓	◴	◴	**NA4938**
190	570	1400	2000	✓	✓	✓	✓	**RNA4836**
224	735	1200	1800	✓	✓	✓	✓	**NA4840**
505	1180	1200	1800	✓	✓	✓	✓	**NA4940**
375	890	1300	2000	✓	✓	✓	✓	**RNA4936**
220	710	1300	1900	✓	✓	✓	✓	**RNA4838**
390	945	1300	1900	✓	✓	✓	✓	**RNA4938**
224	735	1200	1800	✓	✓	✓	✓	**RNA4840**
238	815	1100	1700	✓	✓	✓	✓	**NA4844**
525	1270	1100	1600	✓	✓	✓	✓	**NA4944**
505	1180	1200	1800	✓	✓	✓	✓	**RNA4940**
238	815	1100	1700	✓	✓	✓	✓	**RNA4844**
347	1120	950	1500	✓	✓	✓	✓	**NA4848**
540	1350	1000	1500	✓	✓	✓	✓	**NA4948**
525	1270	1100	1600	✓	✓	✓	✓	**RNA4944**
358	1200	900	1400	✓	✓	✓	✓	**NA4852**
805	1900	950	1400	✓	✓	✓	✓	**NA4952**
347	1120	950	1500	✓	✓	✓	✓	**RNA4848**
540	1350	1000	1500	✓	✓	✓	✓	**RNA4948**
429	1320	850	1300	✓	✓	✓	✓	**NA4856**
835	2030	850	1300	✓	✓	✓	✓	**NA4956**
358	1200	900	1400	✓	✓	✓	✓	**RNA4852**
805	1900	950	1400	✓	✓	✓	✓	**RNA4952**
594	1800	750	1100	✓	✓	✓	✓	**NA4860**
1080	2640	800	1200	✓	✓	✓	✓	**NA4960**
429	1320	850	1300	✓	✓	✓	✓	**RNA4856**
835	2030	850	1300	✓	✓	✓	✓	**RNA4956**
605	1900	750	1100	✓	✓	✓	✓	**NA4864**
1120	2820	750	1100	✓	✓	✓	✓	**NA4964**
594	1800	750	1100	✓	✓	✓	✓	**RNA4860**
616	1960	700	1000	✓	✓	✓	✓	**NA4868**
1080	2640	800	1200	✓	✓	✓	✓	**RNA4960**
1160	3000	750	1100	✓	✓	✓	✓	**NA4968**

* Other products also available

https://nppnovoteh.com

6. NEEDLE ROLLER BEARINGS AND RELATED BEARINGS

6.1. Solid needle roller bearings – types – NA, NKI, NAO



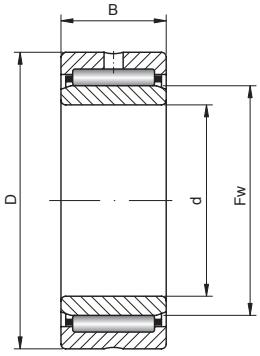

NA 49.. NA 48.. NA 40..
NA 22.. NA 59.. NA 69..
NK.. NKI..

350 – 490 mm

Shaft [mm]	Bearing No.	Inner ring IR	Rows	Dimensions [mm]					Weight [kg]
				d	Fw	Fz	D	B	
350	**RNA4864**	-	1	350	350	-	400	80	13,5000
360	**NA4872**	IR360X390X80	1	360	390	-	440	80	25,5000
	RNA4964	-	1	360	360	-	440	118	29,4000
	NA4972	IR360X400X118	1	360	400	-	480	118	49,0000
370	**RNA4868**	-	1	370	370	-	420	80	14,0000
380	**RNA4968**	-	1	380	380	-	460	118	30,7000
	NA4876	IR380X415X100	1	380	415	-	480	100	42,5000
	NA4976	IR380X430X140	1	380	430	-	520	140	73,6000
390	**RNA4872**	-	1	390	390	-	440	80	15,0000
400	**RNA4972**	-	1	400	400	-	480	118	31,9000
	NA4980	IR400X450X140	1	400	450	-	540	140	76,6000
415	**RNA4876**	-	1	415	415	-	480	100	26,0000
420	**NA4984**	IR420X470X140	1	420	470	-	560	140	89,8000
430	**RNA4976**	-	1	430	430	-	520	140	47,8000
440	**NA4988**	IR440X490X160	1	440	490	-	600	160	123,0000
450	**RNA4980**	-	1	450	450	-	540	140	49,8000
470	**RNA4984**	-	1	470	470	-	560	140	58,4000
490	**RNA4988**	-	1	490	490	-	600	160	80,0000

- warehouse - order - phone

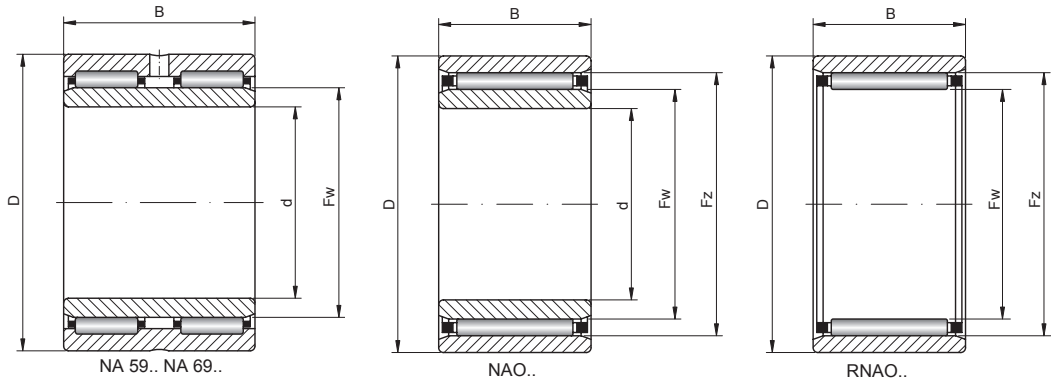

NA 59.. NA 69.. NAO.. RNAO..

Basic load ratings [kN]		Limiting speed [rpm]		Basic makes*				Bearing No.
dyn. C	stat. C_0	grease	oil	-	TN	N	C3	
605	1900	750	1100	✓	✓	✓	✓	**RNA4864**
627	2040	670	950	✓	✓	✓	✓	**NA4872**
1120	2820	750	1100	✓	✓	✓	✓	**RNA4964**
1200	3200	650	1000	✓	✓	✓	✓	**NA4972**
616	1960	700	1000	✓	✓	✓	✓	**RNA4868**
1160	3000	750	1100	✓	✓	✓	✓	**RNA4968**
968	3000	630	900	✓	✓	✓	✓	**NA4876**
1400	3750	650	950	✓	✓	✓	✓	**NA4976**
627	2040	670	950	✓	✓	✓	✓	**RNA4872**
1200	3200	650	1000	✓	✓	✓	✓	**RNA4972**
1450	4000	600	900	✓	✓	✓	✓	**NA4980**
968	3000	630	900	✓	✓	✓	✓	**RNA4876**
1500	4250	550	850	✓	✓	✓	✓	**NA4984**
1400	3750	650	950	✓	✓	✓	✓	**RNA4976**
1750	4600	550	800	✓	✓	✓	✓	**NA4988**
1450	4000	600	900	✓	✓	✓	✓	**RNA4980**
1500	4250	550	850	✓	✓	✓	✓	**RNA4984**
1750	4600	550	800	✓	✓	✓	✓	**RNA4988**

* Other products also available



https://nppnovoteh.com

6. NEEDLE ROLLER BEARINGS AND RELATED BEARINGS

6.2. Thin-walled needle roller bearings – types – HK, BK



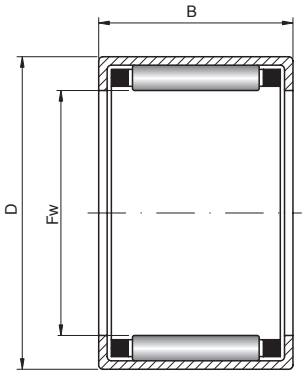

HK..

4 – 12 mm

Shaft [mm]	A-Bearing No.	B-Bearing No.	Dimensions [mm]			Basic load ratings [kN]		Limiting speed [rpm]	
			Fw	D	B	dyn. C	stat. C_0	grease	oil
4	**HK0408**	**BK0408**	4	8	8	1,50	1,20	20000	28000
	HK0409	**BK0409**	4	8	9	1,80	1,40	20000	28000
5	**HK0508**	**BK0508**	5	9	8	1,90	1,60	17000	24000
	HK0509	**BK0509**	5	9	9	2,30	2,00	17000	24000
6	**HK0607**	**BK0607**	6	10	7	1,90	1,70	16000	22000
	HK0608	**BK0608**	6	10	8	2,10	1,90	16000	22000
	HK0609	**BK0609**	6	10	9	2,50	2,10	16000	22000
	HK0610	**BK0610**	6	10	10	2,90	2,90	16000	22000
	HK0611	**BK0611**	6	10	11	3,30	3,70	16000	22000
7	**HK0708**	**BK0708**	7	11	8	2,30	2,20	15000	20000
	HK0709	**BK0709**	7	11	9	2,70	2,70	15000	20000
	HK0710	**BK0710**	7	11	10	3,10	3,30	15000	20000
	HK0712	**BK0712**	7	11	12	3,90	4,30	15000	20000
	HK071208	**BK071208**	7	12	8	2,30	2,20	15000	20000
8	**HK0808**	**BK0808**	8	12	8	2,40	2,40	14000	19000
	HK0809	**BK0809**	8	12	9	2,90	3,10	14000	19000
	HK0810	**BK0810**	8	12	10	3,30	3,70	14000	19000
	HK0812	**BK0812**	8	12	12	4,20	4,90	14000	19000
	HK0815	**BK0815**	8	12	15	4,30	5,00	14000	19000
	HK081410	**BK081410**	8	14	10	3,40	3,20	14000	19000
	HK081412	**BK081412**	8	14	12	4,40	4,40	14000	19000
	HK081414	**BK081414**	8	14	14	5,40	5,70	14000	19000
	HK081512	**BK081512**	8	15	12	4,40	4,40	14000	19000
9	**HK0908**	**BK0908**	9	13	8	2,70	2,90	13000	18000
	HK0909	**BK0909**	9	13	9	3,30	3,70	13000	18000
	HK0910	**BK0910**	9	13	10	3,70	4,40	13000	18000
	HK0912	**BK0912**	9	13	12	4,70	5,90	13000	18000
	HK0914	**BK0914**	9	13	14	5,60	7,40	13000	18000
	HK091510	**BK091510**	9	15	10	3,70	3,60	13000	18000
	HK091512	**BK091512**	9	15	12	4,80	5,00	13000	18000
	HK091513	**BK091513**	9	15	13	4,80	5,00	13000	18000
	HK091514	**BK091514**	9	15	14	5,80	6,50	13000	18000
	HK091516	**BK091516**	9	15	16	6,80	7,90	13000	18000
10	**HK1008**	**BK1008**	10	14	8	2,90	3,20	11000	17000
	HK1009	**BK1009**	10	14	9	3,40	4,00	11000	17000
	HK1010	**BK1010**	10	14	10	3,90	4,80	11000	17000
	HK1012	**BK1012**	10	14	12	4,90	6,40	11000	17000
	HK1014	**BK1014**	10	14	14	5,80	8,00	11000	17000
	HK1015	**BK1015**	10	14	15	5,80	8,00	11000	17000
	HK101610	**BK101610**	10	16	10	3,90	4,00	11000	17000
	HK101612	**BK101612**	10	16	12	5,10	5,60	11000	17000
	HK101614	**BK101614**	10	16	14	6,20	7,30	11000	17000
	HK101615	**BK101615**	10	16	15	6,20	7,30	11000	17000
	HK101616	**BK101616**	10	16	16	7,30	8,90	11000	17000
12	**HK1208**	**BK1208**	12	16	8	3,10	3,80	9500	15000
	HK1209	**BK1209**	12	16	9	3,70	4,70	9500	15000
	HK1210	**BK1210**	12	16	10	4,30	5,60	9500	15000
	HK1212	**BK1212**	12	16	12	5,30	7,50	9500	15000
	HK1214	**BK1214**	12	16	14	6,30	9,40	9500	15000

- warehouse - order - phone

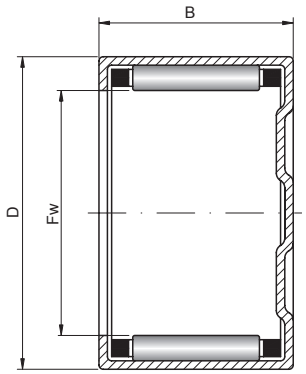

BK..

Weight HK [kg]	Weight BK [kg]	Basic makes*					A-Bearing No.	B-Bearing No.
		-	B	2RS (HK)	RS	TN		
0,0014	0,0015	●	●	◴	◴	◴	**BK0408**	**HK0408**
0,0016	0,0017	●	●	◴	◴	◴	**BK0409**	**HK0409**
0,0017	0,0018	●	●	◴	◴	◴	**BK0508**	**HK0508**
0,0019	0,0020	●	●	◴	◴	◴	**BK0509**	**HK0509**
0,0020	0,0021	●	●	◴	◴	◴	**BK0607**	**HK0607**
0,0019	0,0021	●	●	◴	◴	◴	**BK0608**	**HK0608**
0,0021	0,0023	●	●	◴	◴	◴	**BK0609**	**HK0609**
0,0024	0,0025	●	●	◴	◴	◴	**BK0610**	**HK0610**
0,0028	0,0030	●	●	◴	◴	◴	**BK0611**	**HK0611**
0,0021	0,0023	●	●	◴	◴	◴	**BK0708**	**HK0708**
0,0024	0,0025	●	●	◴	◴	◴	**BK0709**	**HK0709**
0,0027	0,0029	●	●	◴	◴	◴	**BK0710**	**HK0710**
0,0033	0,0034	●	●	◴	◴	◴	**BK0712**	**HK0712**
0,0027	0,0029	●	●	◴	◴	◴	**BK071208**	**HK071208**
0,0024	0,0026	●	●	◴	◴	◴	**BK0808**	**HK0808**
0,0027	0,0029	●	●	◴	◴	◴	**BK0809**	**HK0809**
0,0029	0,0032	●	●	◴	◴	◴	**BK0810**	**HK0810**
0,0036	0,0038	●	●	◴	◴	◴	**BK0812**	**HK0812**
0,0053	0,0057	●	●	◴	◴	◴	**BK0815**	**HK0815**
0,0055	0,0059	●	●	◴	◴	◴	**BK081410**	**HK081410**
0,0066	0,0071	●	●	◴	◴	◴	**BK081412**	**HK081412**
0,0079	0,0083	●	●	◴	◴	◴	**BK081414**	**HK081414**
0,0048	0,0051	●	●	◴	◴	◴	**BK081512**	**HK081512**
0,0027	0,0029	●	●	◴	◴	◴	**BK0908**	**HK0908**
0,0029	0,0032	●	●	◴	◴	◴	**BK0909**	**HK0909**
0,0033	0,0035	●	●	◴	◴	◴	**BK0910**	**HK0910**
0,0041	0,0043	●	●	◴	◴	◴	**BK0912**	**HK0912**
0,0049	0,0052	●	●	◴	◴	◴	**BK0914**	**HK0914**
0,0059	0,0064	●	●	◴	◴	◴	**BK091510**	**HK091510**
0,0072	0,0077	●	●	◴	◴	◴	**BK091512**	**HK091512**
0,0056	0,0060	●	●	◴	◴	◴	**BK091513**	**HK091513**
0,0084	0,0090	●	●	◴	◴	◴	**BK091514**	**HK091514**
0,0098	0,0104	●	●	◴	◴	◴	**BK091516**	**HK091516**
0,0029	0,0032	●	●	◴	◴	◴	**BK1008**	**HK1008**
0,0031	0,0035	●	●	◴	◴	◴	**BK1009**	**HK1009**
0,0036	0,0039	●	●	◴	◴	◴	**BK1010**	**HK1010**
0,0044	0,0048	●	●	◴	◴	◴	**BK1012**	**HK1012**
0,0053	0,0056	●	●	◴	◴	◴	**BK1014**	**HK1014**
0,0060	0,0064	●	●	◴	◴	◴	**BK1015**	**HK1015**
0,0064	0,0070	●	●	◴	◴	◴	**BK101610**	**HK101610**
0,0078	0,0085	●	●	◴	◴	◴	**BK101612**	**HK101612**
0,0091	0,0098	●	●	◴	◴	◴	**BK101614**	**HK101614**
0,0070	0,0075	●	●	◴	◴	◴	**BK101615**	**HK101615**
0,0106	0,0112	●	●	◴	◴	◴	**BK101616**	**HK101616**
0,0033	0,0038	●	●	◴	◴	◴	**BK1208**	**HK1208**
0,0037	0,0042	●	●	◴	◴	◴	**BK1209**	**HK1209**
0,0041	0,0046	●	●	◴	◴	◴	**BK1210**	**HK1210**
0,0051	0,0055	●	●	◴	◴	◴	**BK1212**	**HK1212**
0,0060	0,0065	●	●	◴	◴	◴	**BK1214**	**HK1214**

* Other products also available

https://nppnovoteh.com

6. NEEDLE ROLLER BEARINGS AND RELATED BEARINGS

6.2. Thin-walled needle roller bearings – types – HK, BK



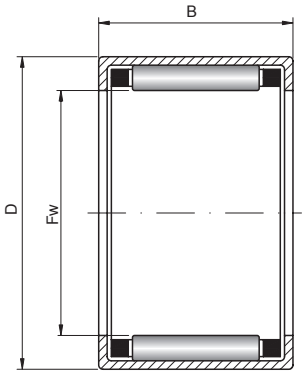

HK..

12 – 17 mm

Shaft [mm]	A-Bearing No.	B-Bearing No.	Dimensions [mm]			Basic load ratings [kN]		Limiting speed [rpm]	
			Fw	D	B	dyn. C	stat. C_0	grease	oil
12 cont.	**HK1216**	**BK1216**	12	16	16	6,30	9,40	9500	15000
	HK121712	**BK121712**	12	17	12	5,30	7,50	9500	15000
	HK121718	**BK121718**	12	17	18	6,30	9,40	9500	15000
	HK121810	**BK121810**	12	18	10	4,40	4,90	9500	15000
	HK121812	**BK121812**	12	18	12	5,80	6,90	9500	15000
	HK121814	**BK121814**	12	18	14	7,00	8,80	9500	15000
	HK121816	**BK121816**	12	18	16	8,20	10,80	9500	15000
	HK121818	**BK121818**	12	18	18	9,30	12,80	9500	15000
14	**HK1410**	**BK1410**	14	20	10	4,90	5,80	9500	15000
	HK1412	**BK1412**	14	20	12	6,30	8,10	9500	15000
	HK1414	**BK1414**	14	20	14	7,70	10,50	9500	15000
	HK1416	**BK1416**	14	20	16	9,00	12,80	9500	15000
	HK1418	**BK1418**	14	20	18	10,20	15,00	9500	15000
	HK1420	**BK1420**	14	20	20	11,50	17,20	9500	15000
	HK142212	**BK142212**	14	22	12	7,00	7,20	9500	15000
	HK142214	**BK142214**	14	22	14	8,80	9,60	9500	15000
	HK142216	**BK142216**	14	22	16	10,50	12,00	9500	15000
	HK142218	**BK142218**	14	22	18	12,20	14,20	9500	15000
	HK142220	**BK142220**	14	22	20	13,50	16,80	9500	15000
15	**HK152012**	**BK152012**	15	20	12	7,00	7,20	9500	15000
	HK152016	**BK152016**	15	20	16	10,50	12,00	9500	15000
	HK152020	**BK152020**	15	20	20	13,50	16,80	9500	15000
	HK1510	**BK1510**	15	21	10	5,10	6,20	9000	14000
	HK1512	**BK1512**	15	21	12	6,60	8,70	9000	14000
	HK1514	**BK1514**	15	21	14	8,00	11,20	9000	14000
	HK1516	**BK1516**	15	21	16	9,40	13,80	9000	14000
	HK1518	**BK1518**	15	21	18	10,80	16,20	9000	14000
	HK1520	**BK1520**	15	21	20	12,00	18,50	9000	14000
	HK152212	**BK152212**	15	22	12	6,60	8,70	9000	14000
	HK152312	**BK152312**	15	23	12	7,50	7,90	9000	14000
	HK152314	**BK152314**	15	23	14	9,40	10,50	9000	14000
	HK152316	**BK152316**	15	23	16	11,20	13,20	9000	14000
	HK152318	**BK152318**	15	23	18	12,80	15,80	9000	14000
	HK152320	**BK152320**	15	23	20	14,50	18,50	9000	14000
16	**HK162109**	**BK162109**	16	21	9	5,30	6,60	8500	13000
	HK1610	**BK1610**	16	22	10	5,30	6,60	8500	13000
	HK1612	**BK1612**	16	22	12	6,80	9,30	8500	13000
	HK1614	**BK1614**	16	22	14	8,30	12,00	8500	13000
	HK1616	**BK1616**	16	22	16	9,70	14,50	8500	13000
	HK1618	**BK1618**	16	22	18	11,50	17,20	8500	13000
	HK1620	**BK1620**	16	22	20	12,50	20,00	8500	13000
	HK162412	**BK162412**	16	24	12	7,50	8,00	8500	13000
	HK162414	**BK162414**	16	24	14	9,40	10,80	8500	13000
	HK162416	**BK162416**	16	24	16	11,20	13,20	8500	13000
	HK162418	**BK162418**	16	24	18	12,80	16,00	8500	13000
	HK162420	**BK162420**	16	24	20	14,50	18,80	8500	13000
17	**HK1710**	**BK1710**	17	23	10	5,50	7,10	8000	12000
	HK1712	**BK1712**	17	23	12	7,10	9,90	8000	12000
	HK1714	**BK1714**	17	23	14	8,60	12,80	8000	12000
	HK1716	**BK1716**	17	23	16	10,20	15,50	8000	12000
	HK1718	**BK1718**	17	23	18	11,50	18,50	8000	12000
	HK1720	**BK1720**	17	23	20	13,50	22,50	8000	12000

- warehouse - order - phone

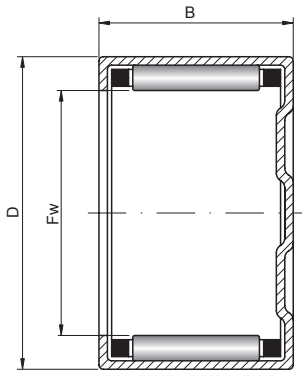

BK..

Weight HK [kg]	Weight BK [kg]	Basic makes*					A-Bearing No.	B-Bearing No.
		-	B	2RS (HK)	RS	TN		
0,0120	0,0128	●	●	◴	◴	◴	**BK1216**	**HK1216**
0,0068	0,0073	●	●	◴	◴	◴	**BK121712**	**HK121712**
0,0102	0,0109	●	●	◴	◴	◴	**BK121718**	**HK121718**
0,0073	0,0083	●	●	◴	◴	◴	**BK121810**	**HK121810**
0,0090	0,0099	●	●	◴	◴	◴	**BK121812**	**HK121812**
0,0106	0,0115	●	●	◴	◴	◴	**BK121814**	**HK121814**
0,0122	0,0132	●	●	◴	◴	◴	**BK121816**	**HK121816**
0,0138	0,0147	●	●	◴	◴	◴	**BK121818**	**HK121818**
0,0083	0,0096	●	●	◴	◴	◴	**BK1410**	**HK1410**
0,0101	0,0113	●	●	◴	◴	◴	**BK1412**	**HK1412**
0,0120	0,0132	●	●	◴	◴	◴	**BK1414**	**HK1414**
0,0139	0,0152	●	●	◴	◴	◴	**BK1416**	**HK1416**
0,0156	0,0169	●	●	◴	◴	◴	**BK1418**	**HK1418**
0,0175	0,0187	●	●	◴	◴	◴	**BK1420**	**HK1420**
0,0132	0,0145	●	●	◴	◴	◴	**BK142212**	**HK142212**
0,0157	0,0170	●	●	◴	◴	◴	**BK142214**	**HK142214**
0,0181	0,0194	●	●	◴	◴	◴	**BK142216**	**HK142216**
0,0205	0,0218	●	●	◴	◴	◴	**BK142218**	**HK142218**
0,0231	0,0244	●	●	◴	◴	◴	**BK142220**	**HK142220**
0,0100	0,0107	●	●	◴	◴	◴	**BK152012**	**HK152012**
0,0133	0,0142	●	●	◴	◴	◴	**BK152016**	**HK152016**
0,0167	0,0179	●	●	◴	◴	◴	**BK152020**	**HK152020**
0,0087	0,0102	●	●	◴	◴	◴	**BK1510**	**HK1510**
0,0107	0,0121	●	●	◴	◴	◴	**BK1512**	**HK1512**
0,0127	0,0141	●	●	◴	◴	◴	**BK1514**	**HK1514**
0,0145	0,0160	●	●	◴	◴	◴	**BK1516**	**HK1516**
0,0165	0,0180	●	●	◴	◴	◴	**BK1518**	**HK1518**
0,0185	0,0200	●	●	◴	◴	◴	**BK1520**	**HK1520**
0,0130	0,0139	●	●	◴	◴	◴	**BK152212**	**HK152212**
0,0139	0,0154	●	●	◴	◴	◴	**BK152312**	**HK152312**
0,0166	0,0181	●	●	◴	◴	◴	**BK152314**	**HK152314**
0,0193	0,0208	●	●	◴	◴	◴	**BK152316**	**HK152316**
0,0218	0,0233	●	●	◴	◴	◴	**BK152318**	**HK152318**
0,0244	0,0259	●	●	◴	◴	◴	**BK152320**	**HK152320**
0,0080	0,0086	●	●	◴	◴	◴	**BK162109**	**HK162109**
0,0090	0,0106	●	●	◴	◴	◴	**BK1610**	**HK1610**
0,0110	0,0126	●	●	◴	◴	◴	**BK1612**	**HK1612**
0,0130	0,0147	●	●	◴	◴	◴	**BK1614**	**HK1614**
0,0151	0,0167	●	●	◴	◴	◴	**BK1616**	**HK1616**
0,0172	0,0188	●	●	◴	◴	◴	**BK1618**	**HK1618**
0,0192	0,0209	●	●	◴	◴	◴	**BK1620**	**HK1620**
0,0141	0,0158	●	●	◴	◴	◴	**BK162412**	**HK162412**
0,0170	0,0186	●	●	◴	◴	◴	**BK162414**	**HK162414**
0,0196	0,0213	●	●	◴	◴	◴	**BK162416**	**HK162416**
0,0223	0,0240	●	●	◴	◴	◴	**BK162418**	**HK162418**
0,0249	0,0266	●	●	◴	◴	◴	**BK162420**	**HK162420**
0,0093	0,0112	●	●	◴	◴	◴	**BK1710**	**HK1710**
0,0115	0,0134	●	●	◴	◴	◴	**BK1712**	**HK1712**
0,0137	0,0156	●	●	◴	◴	◴	**BK1714**	**HK1714**
0,0159	0,0177	●	●	◴	◴	◴	**BK1716**	**HK1716**
0,0181	0,0199	●	●	◴	◴	◴	**BK1718**	**HK1718**
0,0205	0,0224	●	●	◴	◴	◴	**BK1720**	**HK1720**

* Other products also available

https://nppnovoteh.com

6. NEEDLE ROLLER BEARINGS AND RELATED BEARINGS

6.2. Thin-walled needle roller bearings – types – HK, BK



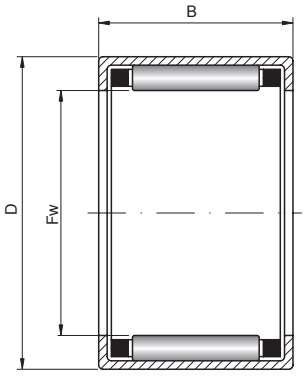

HK..

17 – 25 mm

Shaft [mm]	A-Bearing No.	B-Bearing No.	Dimensions [mm]			Basic load ratings [kN]		Limiting speed [rpm]	
			Fw	D	B	dyn. C	stat. C_0	grease	oil
17 cont.	**HK1722**	**BK1722**	17	23	22	15,00	26,00	8000	12000
	HK172512	**BK172512**	17	25	12	7,90	8,80	8000	12000
	HK172514	**BK172514**	17	25	14	9,90	11,80	8000	12000
	HK172516	**BK172516**	17	25	16	11,80	14,50	8000	12000
	HK172518	**BK172518**	17	25	18	13,50	17,50	8000	12000
	HK172520	**BK172520**	17	25	20	15,20	20,50	8000	12000
18	**HK1810**	**BK1810**	18	24	10	5,60	7,50	7500	11000
	HK1812	**BK1812**	18	24	12	7,30	10,50	7500	11000
	HK1814	**BK1814**	18	24	14	8,90	13,50	7500	11000
	HK1816	**BK1816**	18	24	16	10,50	16,50	7500	11000
	HK1818	**BK1818**	18	24	18	12,00	19,50	7500	11000
	HK1820	**BK1820**	18	24	20	13,20	22,50	7500	11000
	HK182612	**BK182612**	18	26	12	8,30	9,50	7500	11000
	HK182614	**BK182614**	18	26	14	10,50	12,80	7500	11000
	HK182616	**BK182616**	18	26	16	12,50	15,80	7500	11000
	HK182618	**BK182618**	18	26	18	14,20	19,00	7500	11000
	HK182620	**BK182620**	18	26	20	16,20	22,20	7500	11000
20	**HK2010**	**BK2010**	20	26	10	6,00	8,40	7000	10000
	HK2012	**BK2012**	20	26	12	7,80	11,80	7000	10000
	HK2014	**BK2014**	20	26	14	9,50	15,20	7000	10000
	HK2016	**BK2016**	20	26	16	11,20	18,50	7000	10000
	HK2018	**BK2018**	20	26	18	12,50	21,80	7000	10000
	HK2020	**BK2020**	20	26	20	14,20	25,20	7000	10000
	HK2025	**BK2025**	20	26	25	16,20	22,20	7500	11000
	HK202812	**BK202812**	20	28	12	8,70	10,20	7000	10000
	HK202814	**BK202814**	20	28	14	11,00	13,80	7000	10000
	HK202816	**BK202816**	20	28	16	13,00	17,20	7000	10000
	HK202818	**BK202818**	20	28	18	15,00	20,80	7000	10000
	HK202820	**BK202820**	20	28	20	16,80	24,20	7000	10000
	HK202918	**BK202918**	20	29	18	15,00	20,80	7000	10000
22	**HK2210**	**BK2210**	22	28	10	6,30	9,30	6700	9500
	HK2212	**BK2212**	22	28	12	8,20	13,00	6700	9500
	HK2214	**BK2214**	22	28	14	10,00	16,80	6700	9500
	HK2216	**BK2216**	22	28	16	11,80	20,50	6700	9500
	HK2218	**BK2218**	22	28	18	13,20	24,20	6700	9500
	HK2220	**BK2220**	22	28	20	15,00	27,80	6700	9500
	HK223012	**BK223012**	22	30	12	9,10	11,20	6700	9500
	HK223014	**BK223014**	22	30	14	11,20	15,00	6700	9500
	HK223016	**BK223016**	22	30	16	13,50	18,50	6700	9500
	HK223018	**BK223018**	22	30	18	15,50	22,20	6700	9500
	HK223020	**BK223020**	22	30	20	17,50	26,00	6700	9500
25	**HK2508**	**BK2508**	25	32	8	8,00	9,00	6300	9000
	HK2512	**BK2512**	25	32	12	9,10	13,20	6300	9000
	HK2514	**BK2514**	25	32	14	11,50	17,50	6300	9000
	HK2516	**BK2516**	25	32	16	13,50	22,00	6300	9000
	HK2518	**BK2518**	25	32	18	15,50	26,50	6300	9000
	HK2520	**BK2520**	25	32	20	17,50	30,80	6300	9000
	HK2522	**BK2522**	25	32	22	19,50	35,10	6300	9000
	HK2524	**BK2524**	25	32	24	21,20	39,50	6300	9000
	HK253315	**BK253315**	25	33	15	12,20	14,00	6300	9000
	HK253514	**BK253514**	25	35	14	12,20	14,00	6300	9000
	HK253516	**BK253516**	25	35	16	15,00	18,20	6300	9000

- warehouse - order - phone

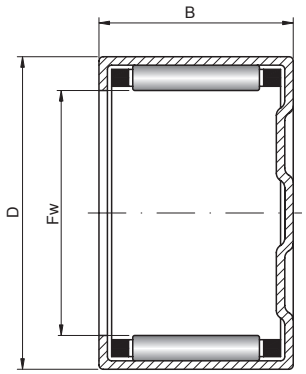

BK..

Weight HK [kg]	Weight BK [kg]	Basic makes*					A-Bearing No.	B-Bearing No.
		-	B	2RS (HK)	RS	TN		
0,0220	0,0235	●	●	◴	◴	◴	**BK1722**	**HK1722**
0,0149	0,0168	●	●	◴	◴	◴	**BK172512**	**HK172512**
0,0178	0,0197	●	●	◴	◴	◴	**BK172514**	**HK172514**
0,0207	0,0226	●	●	◴	◴	◴	**BK172516**	**HK172516**
0,0235	0,0254	●	●	◴	◴	◴	**BK172518**	**HK172518**
0,0264	0,0283	●	●	◴	◴	◴	**BK172520**	**HK172520**
0,0099	0,0120	●	●	◴	◴	◴	**BK1810**	**HK1810**
0,0120	0,0142	●	●	◴	◴	◴	**BK1812**	**HK1812**
0,0145	0,0165	●	●	◴	◴	◴	**BK1814**	**HK1814**
0,0167	0,0188	●	●	◴	◴	◴	**BK1816**	**HK1816**
0,0190	0,0211	●	●	◴	◴	◴	**BK1818**	**HK1818**
0,0212	0,0233	●	●	◴	◴	◴	**BK1820**	**HK1820**
0,0157	0,0179	●	●	◴	◴	◴	**BK182612**	**HK182612**
0,0188	0,0209	●	●	◴	◴	◴	**BK182614**	**HK182614**
0,0218	0,0239	●	●	◴	◴	◴	**BK182616**	**HK182616**
0,0248	0,0269	●	●	◴	◴	◴	**BK182618**	**HK182618**
0,0278	0,0300	●	●	◴	◴	◴	**BK182620**	**HK182620**
0,0108	0,0133	●	●	◴	◴	◴	**BK2010**	**HK2010**
0,0133	0,0158	●	●	◴	◴	◴	**BK2012**	**HK2012**
0,0157	0,0183	●	●	◴	◴	◴	**BK2014**	**HK2014**
0,0182	0,0208	●	●	◴	◴	◴	**BK2016**	**HK2016**
0,0208	0,0233	●	●	◴	◴	◴	**BK2018**	**HK2018**
0,0233	0,0258	●	●	◴	◴	◴	**BK2020**	**HK2020**
0,0308	0,0330	●	●	◴	◴	◴	**BK2025**	**HK2025**
0,0171	0,0197	●	●	◴	◴	◴	**BK202812**	**HK202812**
0,0203	0,0229	●	●	◴	◴	◴	**BK202814**	**HK202814**
0,0236	0,0262	●	●	◴	◴	◴	**BK202816**	**HK202816**
0,0268	0,0294	●	●	◴	◴	◴	**BK202818**	**HK202818**
0,0302	0,0328	●	●	◴	◴	◴	**BK202820**	**HK202820**
0,0354	0,0379	●	●	◴	◴	◴	**BK202918**	**HK202918**
0,0117	0,0148	●	●	◴	◴	◴	**BK2210**	**HK2210**
0,0144	0,0175	●	●	◴	◴	◴	**BK2212**	**HK2212**
0,0172	0,0202	●	●	◴	◴	◴	**BK2214**	**HK2214**
0,0199	0,0229	●	●	◴	◴	◴	**BK2216**	**HK2216**
0,0225	0,0256	●	●	◴	◴	◴	**BK2218**	**HK2218**
0,0253	0,0284	●	●	◴	◴	◴	**BK2220**	**HK2220**
0,0184	0,0215	●	●	◴	◴	◴	**BK223012**	**HK223012**
0,0219	0,0250	●	●	◴	◴	◴	**BK223014**	**HK223014**
0,0253	0,0284	●	●	◴	◴	◴	**BK223016**	**HK223016**
0,0289	0,0321	●	●	◴	◴	◴	**BK223018**	**HK223018**
0,0324	0,0356	●	●	◴	◴	◴	**BK223020**	**HK223020**
0,0142	0,0152	●	●	◴	◴	◴	**BK2508**	**HK2508**
0,0183	0,0222	●	●	◴	◴	◴	**BK2512**	**HK2512**
0,0219	0,0259	●	●	◴	◴	◴	**BK2514**	**HK2514**
0,0252	0,0292	●	●	◴	◴	◴	**BK2516**	**HK2516**
0,0288	0,0328	●	●	◴	◴	◴	**BK2518**	**HK2518**
0,0323	0,0363	●	●	◴	◴	◴	**BK2520**	**HK2520**
0,0392	0,0419	●	●	◴	◴	◴	**BK2522**	**HK2522**
0,0393	0,0432	●	●	◴	◴	◴	**BK2524**	**HK2524**
0,0311	0,0333	●	●	◴	◴	◴	**BK253315**	**HK253315**
0,0299	0,0340	●	●	◴	◴	◴	**BK253514**	**HK253514**
0,0350	0,0390	●	●	◴	◴	◴	**BK253516**	**HK253516**

* Other products also available

https://nppnovoteh.com

6. NEEDLE ROLLER BEARINGS AND RELATED BEARINGS

6.2. Thin-walled needle roller bearings – types – HK, BK



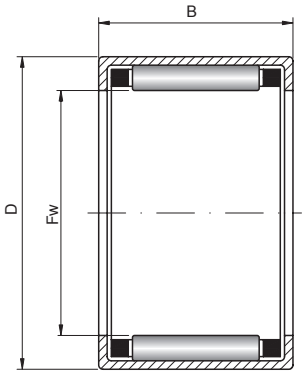

HK..

25 – 35 mm

Shaft [mm]	A-Bearing No.	B-Bearing No.	Dimensions [mm]			Basic load ratings [kN]		Limiting speed [rpm]	
			Fw	D	B	dyn. C	stat. C_0	grease	oil
25 cont.	**HK253518**	**BK253518**	25	35	18	17,50	22,50	6300	9000
	HK253520	**BK253520**	25	35	20	20,20	26,80	6300	9000
	HK253524	**BK253524**	25	35	24	25,00	35,20	6300	9000
28	**HK2812**	**BK2812**	28	35	12	9,50	14,50	6300	9000
	HK2814	**BK2814**	28	35	14	12,00	19,50	6300	9000
	HK2816	**BK2816**	28	35	16	14,20	24,20	6300	9000
	HK2818	**BK2818**	28	35	18	16,20	29,20	6300	9000
	HK2820	**BK2820**	28	35	20	18,50	34,00	6300	9000
	HK2824	**BK2824**	28	35	24	22,50	43,50	6300	9000
	HK283814	**BK283814**	28	38	14	13,20	16,20	6300	9000
	HK283816	**BK283816**	28	38	16	16,50	21,20	6300	9000
	HK283818	**BK283818**	28	38	18	19,20	26,20	6300	9000
	HK283820	**BK283820**	28	38	20	22,20	31,00	6300	9000
	HK283824	**BK283824**	28	38	24	27,50	41,00	6300	9000
30	**HK3012**	**BK3012**	30	37	12	10,00	15,80	5600	8000
	HK3014	**BK3014**	30	37	14	12,50	21,20	5600	8000
	HK3016	**BK3016**	30	37	16	15,00	26,50	5600	8000
	HK3018	**BK3018**	30	37	18	17,20	31,80	5600	8000
	HK3020	**BK3020**	30	37	20	19,20	37,00	5600	8000
	HK3024	**BK3024**	30	37	24	23,50	47,50	5600	8000
	HK3038	**BK3038**	30	37	38	27,80	58,00	5600	8000
	HK303824	**BK303824**	30	38	24	23,50	47,50	5600	8000
	HK303832	**BK303832**	30	38	32	27,80	58,00	5600	8000
	HK304014	**BK304014**	30	40	14	13,80	17,50	5600	8000
	HK304016	**BK304016**	30	40	16	17,00	22,80	5600	8000
	HK304018	**BK304018**	30	40	18	20,20	28,00	5600	8000
	HK304020	**BK304020**	30	40	20	23,00	33,20	5600	8000
	HK304024	**BK304024**	30	40	24	28,50	43,80	5600	8000
32	**HK3212**	**BK3212**	32	39	12	10,50	17,20	5300	7500
35	**HK3214**	**BK3214**	35	39	14	13,20	23,00	5300	7500
	HK3216	**BK3216**	35	39	16	15,50	28,50	5300	7500
	HK3218	**BK3218**	35	39	18	18,00	34,20	5300	7500
	HK3220	**BK3220**	35	39	20	20,20	40,00	5300	7500
	HK3224	**BK3224**	35	39	24	24,50	51,50	5300	7500
	HK3512	**BK3512**	35	42	12	10,80	18,50	5000	7000
	HK324214	**BK324214**	35	42	14	14,50	18,50	5300	7500
	HK3514	**BK3514**	35	42	14	13,50	24,50	5000	7000
	HK324216	**BK324216**	35	42	16	17,80	24,20	5300	7500
	HK3516	**BK3516**	35	42	16	16,20	30,80	5000	7000
	HK324218	**BK324218**	35	42	18	20,80	29,80	5300	7500
	HK3518	**BK3518**	35	42	18	18,50	37,00	5000	7000
	HK324220	**BK324220**	35	42	20	23,80	35,50	5300	7500
	HK3520	**BK3520**	35	42	20	21,00	43,20	5000	7000
	HK324224	**BK324224**	35	42	24	29,50	46,80	5300	7500
	HK3524	**BK3524**	35	42	24	25,50	55,50	5000	7000
	HK354332	**BK354332**	35	43	32	32,00	53,00	4500	6500
	HK354514	**BK354514**	35	45	14	14,80	19,80	5000	7000
	HK354516	**BK354516**	35	45	16	18,20	25,80	5000	7000
	HK354518	**BK354518**	35	45	18	21,50	31,80	5000	7000
	HK354520	**BK354520**	35	45	20	24,50	37,80	5000	7000
	HK354524	**BK354524**	35	45	24	30,20	49,80	5000	7000

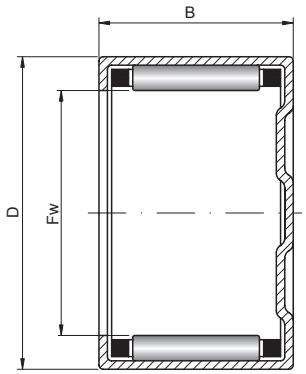

BK..

Weight HK [kg]	Weight BK [kg]	Basic makes*					A-Bearing No.	B-Bearing No.
		-	B	2RS (HK)	RS	TN		
0,0400	0,0441	●	●	◴	◴	◴	**BK253518**	**HK253518**
0,0449	0,0490	●	●	◴	◴	◴	**BK253520**	**HK253520**
0,0548	0,0589	●	●	◴	◴	◴	**BK253524**	**HK253524**
0,0200	0,0249	●	●	◴	◴	◴	**BK2812**	**HK2812**
0,0240	0,0290	●	●	◴	◴	◴	**BK2814**	**HK2814**
0,0276	0,0326	●	●	◴	◴	◴	**BK2816**	**HK2816**
0,0317	0,0366	●	●	◴	◴	◴	**BK2818**	**HK2818**
0,0355	0,0405	●	●	◴	◴	◴	**BK2820**	**HK2820**
0,0432	0,0481	●	●	◴	◴	◴	**BK2824**	**HK2824**
0,0332	0,0383	●	●	◴	◴	◴	**BK283814**	**HK283814**
0,0388	0,0439	●	●	◴	◴	◴	**BK283816**	**HK283816**
0,0444	0,0495	●	●	◴	◴	◴	**BK283818**	**HK283818**
0,0498	0,0549	●	●	◴	◴	◴	**BK283820**	**HK283820**
0,0608	0,0658	●	●	◴	◴	◴	**BK283824**	**HK283824**
0,0214	0,0271	●	●	◴	◴	◴	**BK3012**	**HK3012**
0,0255	0,0312	●	●	◴	◴	◴	**BK3014**	**HK3014**
0,0296	0,0353	●	●	◴	◴	◴	**BK3016**	**HK3016**
0,0336	0,0393	●	●	◴	◴	◴	**BK3018**	**HK3018**
0,0379	0,0436	●	●	◴	◴	◴	**BK3020**	**HK3020**
0,0460	0,0517	●	●	◴	◴	◴	**BK3024**	**HK3024**
0,0760	0,0813	●	●	◴	◴	◴	**BK3038**	**HK3038**
0,0583	0,0624	●	●	◴	◴	◴	**BK303824**	**HK303824**
0,0777	0,0831	●	●	◴	◴	◴	**BK303832**	**HK303832**
0,0352	0,0410	●	●	◴	◴	◴	**BK304014**	**HK304014**
0,0411	0,0469	●	●	◴	◴	◴	**BK304016**	**HK304016**
0,0470	0,0528	●	●	◴	◴	◴	**BK304018**	**HK304018**
0,0528	0,0586	●	●	◴	◴	◴	**BK304020**	**HK304020**
0,0644	0,0702	●	●	◴	◴	◴	**BK304024**	**HK304024**
0,0227	0,0292	●	●	◴	◴	◴	**BK3212**	**HK3212**
0,0272	0,0337	●	●	◴	◴	◴	**BK3214**	**HK3214**
0,0313	0,0378	●	●	◴	◴	◴	**BK3216**	**HK3216**
0,0358	0,0423	●	●	◴	◴	◴	**BK3218**	**HK3218**
0,0404	0,0468	●	●	◴	◴	◴	**BK3220**	**HK3220**
0,0490	0,0555	●	●	◴	◴	◴	**BK3224**	**HK3224**
0,0245	0,0323	●	●	◴	◴	◴	**BK3512**	**HK3512**
0,0372	0,0437	●	●	◴	◴	◴	**BK324214**	**HK324214**
0,0293	0,0371	●	●	◴	◴	◴	**BK3514**	**HK3514**
0,0435	0,0501	●	●	◴	◴	◴	**BK324216**	**HK324216**
0,0339	0,0416	●	●	◴	◴	◴	**BK3516**	**HK3516**
0,0497	0,0563	●	●	◴	◴	◴	**BK324218**	**HK324218**
0,0387	0,0464	●	●	◴	◴	◴	**BK3518**	**HK3518**
0,0558	0,0624	●	●	◴	◴	◴	**BK324220**	**HK324220**
0,0435	0,0512	●	●	◴	◴	◴	**BK3520**	**HK3520**
0,0681	0,0747	●	●	◴	◴	◴	**BK324224**	**HK324224**
0,0528	0,0605	●	●	◴	◴	◴	**BK3524**	**HK3524**
0,0891	0,0953	●	●	◴	◴	◴	**BK354332**	**HK354332**
0,0398	0,0476	●	●	◴	◴	◴	**BK354514**	**HK354514**
0,0465	0,0544	●	●	◴	◴	◴	**BK354516**	**HK354516**
0,0532	0,0610	●	●	◴	◴	◴	**BK354518**	**HK354518**
0,0598	0,0677	●	●	◴	◴	◴	**BK354520**	**HK354520**
0,0729	0,0808	●	●	◴	◴	◴	**BK354524**	**HK354524**

* Other products also available

https://nppnovoteh.com

6. NEEDLE ROLLER BEARINGS AND RELATED BEARINGS

6.2. Thin-walled needle roller bearings – types – HK, BK



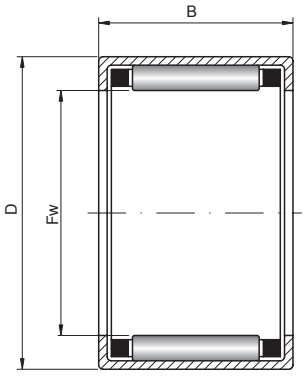

HK..

38 – 50 mm

Shaft [mm]	A-Bearing No.	B-Bearing No.	Dimensions [mm]			Basic load ratings [kN]		Limiting speed [rpm]	
			Fw	D	B	dyn. C	stat. C_0	grease	oil
38	**HK3812**	**BK3812**	38	45	12	11,20	19,80	4500	6300
	HK3814	**BK3814**	38	45	14	14,00	26,50	4500	6300
	HK3816	**BK3816**	38	45	16	16,80	33,00	4500	6300
	HK3818	**BK3818**	38	45	18	19,20	39,50	4500	6300
	HK3820	**BK3820**	38	45	20	21,80	46,20	4500	6300
	HK384814	**BK384814**	38	48	14	15,80	22,20	4500	6300
	HK384816	**BK384816**	38	48	16	19,50	28,80	4500	6300
	HK384818	**BK384818**	38	48	18	22,80	35,50	4500	6300
	HK384820	**BK384820**	38	48	20	26,20	42,20	4500	6300
	HK384824	**BK384824**	38	48	24	32,20	55,50	4500	6300
	HK3824	**BK3824**	38	55	24	26,20	59,50	4500	6300
40	**HK4012**	**BK4012**	40	47	12	11,50	21,20	4500	6300
	HK4014	**BK4014**	40	47	14	14,50	28,20	4500	6300
	HK4016	**BK4016**	40	47	16	17,20	35,20	4500	6300
	HK4018	**BK4018**	40	47	18	20,00	42,20	4500	6300
	HK4020	**BK4020**	40	47	20	22,50	49,20	4500	6300
	HK4024	**BK4024**	40	47	24	27,20	63,50	4500	6300
	HK405014	**BK405014**	40	50	14	16,20	23,20	4500	6300
	HK405016	**BK405016**	40	50	16	20,00	30,20	4500	6300
	HK405018	**BK405018**	40	50	18	23,50	37,20	4500	6300
	HK405020	**BK405020**	40	50	20	26,80	44,50	4500	6300
	HK405024	**BK405024**	40	50	24	33,20	58,50	4500	6300
42	**HK4212**	**BK4212**	42	49	12	12,00	22,50	4300	6000
	HK4214	**BK4214**	42	49	14	15,00	30,00	4300	6000
	HK4216	**BK4216**	42	49	16	18,00	37,50	4300	6000
	HK4218	**BK4218**	42	49	18	20,50	45,00	4300	6000
	HK4220	**BK4220**	42	49	20	23,20	52,20	4300	6000
	HK4224	**BK4224**	42	49	24	28,20	67,20	4300	6000
	HK425214	**BK425214**	42	52	14	16,50	24,50	4300	6000
	HK425216	**BK425216**	42	52	16	20,50	31,80	4300	6000
	HK425218	**BK425218**	42	52	18	24,00	39,20	4300	6000
	HK425220	**BK425220**	42	52	20	27,50	46,50	4300	6000
	HK425224	**BK425224**	42	52	24	34,20	61,50	4300	6000
45	**HK4512**	**BK4512**	45	52	12	12,20	23,80	3800	5300
	HK4514	**BK4514**	45	52	14	15,50	31,80	3800	5300
	HK4516	**BK4516**	45	52	16	18,50	39,50	3800	5300
	HK4518	**BK4518**	45	52	18	21,20	47,50	3800	5300
	HK4520	**BK4520**	45	52	20	24,00	55,50	3800	5300
	HK4524	**BK4524**	45	52	24	29,00	71,20	3800	5300
	HK455514	**BK455514**	45	55	14	17,00	25,50	3800	5300
	HK455516	**BK455516**	45	55	16	20,80	33,50	3800	5300
	HK455518	**BK455518**	45	55	18	24,50	41,20	3800	5300
	HK455520	**BK455520**	45	55	20	28,20	50,00	3800	5300
	HK455524	**BK455524**	45	55	24	34,80	64,50	3800	5300
	HK455538	**BK455538**	45	55	38	41,40	79,00	3800	5300
50	**HK5016**	**BK5016**	50	58	16	21,20	43,50	3400	4800
	HK5018	**BK5018**	50	58	18	24,50	52,20	3400	4800
	HK5020	**BK5020**	50	58	20	27,80	61,00	3400	4800
	HK5024	**BK5024**	50	58	24	33,80	78,50	3400	4800
	HK5025	**BK5025**	50	58	25	33,80	78,50	3400	4800
	HK506038	**BK506038**	50	60	38	37,80	90,17	3400	4800

- warehouse - order - phone

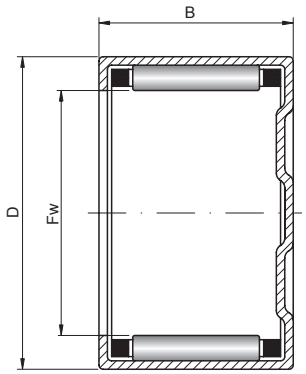

BK..

Weight HK [kg]	Weight BK [kg]	Basic makes*					A-Bearing No.	B-Bearing No.
		-	B	2RS (HK)	RS	TN		
0,0364	0,0354	●	●	◴	◴	◴	**BK3812**	**HK3812**
0,0315	0,0406	●	●	◴	◴	◴	**BK3814**	**HK3814**
0,0364	0,0454	●	●	◴	◴	◴	**BK3816**	**HK3816**
0,0415	0,0506	●	●	◴	◴	◴	**BK3818**	**HK3818**
0,0467	0,0557	●	●	◴	◴	◴	**BK3820**	**HK3820**
0,0431	0,0523	●	●	◴	◴	◴	**BK384814**	**HK384814**
0,0504	0,0596	●	●	◴	◴	◴	**BK384816**	**HK384816**
0,0576	0,0668	●	●	◴	◴	◴	**BK384818**	**HK384818**
0,0647	0,0739	●	●	◴	◴	◴	**BK384820**	**HK384820**
0,0789	0,0881	●	●	◴	◴	◴	**BK384824**	**HK384824**
0,0567	0,0658	●	●	◴	◴	◴	**BK3824**	**HK3824**
0,0276	0,0377	●	●	◴	◴	◴	**BK4012**	**HK4012**
0,0331	0,0431	●	●	◴	◴	◴	**BK4014**	**HK4014**
0,0381	0,0482	●	●	◴	◴	◴	**BK4016**	**HK4016**
0,0437	0,0537	●	●	◴	◴	◴	**BK4018**	**HK4018**
0,0490	0,0591	●	●	◴	◴	◴	**BK4020**	**HK4020**
0,0596	0,0697	●	●	◴	◴	◴	**BK4024**	**HK4024**
0,0451	0,0552	●	●	◴	◴	◴	**BK405014**	**HK405014**
0,0527	0,0628	●	●	◴	◴	◴	**BK405016**	**HK405016**
0,0603	0,0704	●	●	◴	◴	◴	**BK405018**	**HK405018**
0,0677	0,0778	●	●	◴	◴	◴	**BK405020**	**HK405020**
0,0827	0,0928	●	●	◴	◴	◴	**BK405024**	**HK405024**
0,0290	0,0401	●	●	◴	◴	◴	**BK4212**	**HK4212**
0,0347	0,0457	●	●	◴	◴	◴	**BK4214**	**HK4214**
0,0401	0,0512	●	●	◴	◴	◴	**BK4216**	**HK4216**
0,0458	0,0568	●	●	◴	◴	◴	**BK4218**	**HK4218**
0,0514	0,0625	●	●	◴	◴	◴	**BK4220**	**HK4220**
0,0625	0,0736	●	●	◴	◴	◴	**BK4224**	**HK4224**
0,0470	0,0582	●	●	◴	◴	◴	**BK425214**	**HK425214**
0,0549	0,0661	●	●	◴	◴	◴	**BK425216**	**HK425216**
0,0629	0,0741	●	●	◴	◴	◴	**BK425218**	**HK425218**
0,0706	0,0818	●	●	◴	◴	◴	**BK425220**	**HK425220**
0,0862	0,0974	●	●	◴	◴	◴	**BK425224**	**HK425224**
0,0308	0,0435	●	●	◴	◴	◴	**BK4512**	**HK4512**
0,0368	0,0495	●	●	◴	◴	◴	**BK4514**	**HK4514**
0,0425	0,0552	●	●	◴	◴	◴	**BK4516**	**HK4516**
0,0486	0,0613	●	●	◴	◴	◴	**BK4518**	**HK4518**
0,0547	0,0674	●	●	◴	◴	◴	**BK4520**	**HK4520**
0,0664	0,0791	●	●	◴	◴	◴	**BK4524**	**HK4524**
0,0496	0,0625	●	●	◴	◴	◴	**BK455514**	**HK455514**
0,0581	0,0709	●	●	◴	◴	◴	**BK455516**	**HK455516**
0,0664	0,0793	●	●	◴	◴	◴	**BK455518**	**HK455518**
0,0746	0,0874	●	●	◴	◴	◴	**BK455520**	**HK455520**
0,0911	0,1040	●	●	◴	◴	◴	**BK455524**	**HK455524**
0,1696	0,1815	●	●	◴	◴	◴	**BK455538**	**HK455538**
0,0527	0,0684	●	●	◴	◴	◴	**BK5016**	**HK5016**
0,0600	0,0756	●	●	◴	◴	◴	**BK5018**	**HK5018**
0,0673	0,0829	●	●	◴	◴	◴	**BK5020**	**HK5020**
0,0823	0,0979	●	●	◴	◴	◴	**BK5024**	**HK5024**
0,0900	0,0963	●	●	◴	◴	◴	**BK5025**	**HK5025**
0,1866	0,1997	●	●	◴	◴	◴	**BK506038**	**HK506038**

* Other products also available

https://nppnovoteh.com

6. NEEDLE ROLLER BEARINGS AND RELATED BEARINGS

6.2. Thin-walled needle roller bearings – types – HK, BK



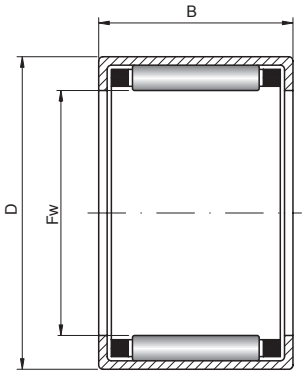

HK..

55 – 70 mm

Shaft [mm]	A-Bearing No.	B-Bearing No.	Dimensions [mm]			Basic load ratings [kN]		Limiting speed [rpm]	
			Fw	D	B	dyn. C	stat. C_0	grease	oil
55	**HK5516**	**BK5516**	55	63	16	22,20	47,50	3200	4500
	HK5518	**BK5518**	55	63	18	25,80	57,20	3200	4500
	HK5520	**BK5520**	55	63	20	29,00	66,50	3200	4500
	HK5524	**BK5524**	55	63	24	35,20	85,50	3200	4500
60	**HK6016**	**BK6016**	60	68	16	23,50	52,80	2800	4000
	HK6018	**BK6018**	60	68	18	27,20	63,50	2800	4000
	HK6020	**BK6020**	60	68	20	30,50	74,00	2800	4000
	HK6024	**BK6024**	60	68	24	37,20	95,00	2800	4000
65	**HK6516**	**BK6516**	65	73	16	24,50	56,80	2800	4000
	HK6518	**BK6518**	65	73	18	28,20	68,20	2800	4000
	HK6520	**BK6520**	65	73	20	31,80	79,50	2800	4000
	HK6524	**BK6524**	65	73	24	38,60	102,00	2800	4000
70	**HK7016**	**BK7016**	70	78	16	25,20	60,80	2600	3800
	HK7018	**BK7018**	70	78	18	29,20	73,00	2600	3800
	HK7020	**BK7020**	70	78	20	32,80	85,20	2600	3800
	HK7024	**BK7024**	70	78	24	40,00	110,00	2600	3800

- warehouse - order - phone

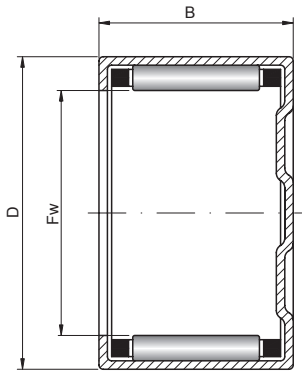

BK..

Weight HK [kg]	Weight BK [kg]	Basic makes*					A-Bearing No.	B-Bearing No.
		-	B	2RS (HK)	RS	TN		
0,0573	0,0762	●	●	◴	◴	◴	**BK5516**	**HK5516**
0,0653	0,0842	●	●	◴	◴	◴	**BK5518**	**HK5518**
0,0733	0,0922	●	●	◴	◴	◴	**BK5520**	**HK5520**
0,0896	0,1090	●	●	◴	◴	◴	**BK5524**	**HK5524**
0,0624	0,0849	●	●	◴	◴	◴	**BK6016**	**HK6016**
0,0711	0,0936	●	●	◴	◴	◴	**BK6018**	**HK6018**
0,0798	0,1020	●	●	◴	◴	◴	**BK6020**	**HK6020**
0,0976	0,1200	●	●	◴	◴	◴	**BK6024**	**HK6024**
0,0671	0,0935	●	●	◴	◴	◴	**BK6516**	**HK6516**
0,0765	0,1030	●	●	◴	◴	◴	**BK6518**	**HK6518**
0,0858	0,1120	●	●	◴	◴	◴	**BK6520**	**HK6520**
0,1050	0,1310	●	●	◴	◴	◴	**BK6524**	**HK6524**
0,0718	0,1020	●	●	◴	◴	◴	**BK7016**	**HK7016**
0,0818	0,1120	●	●	◴	◴	◴	**BK7018**	**HK7018**
0,0919	0,1220	●	●	◴	◴	◴	**BK7020**	**HK7020**
0,1120	0,1430	●	●	◴	◴	◴	**BK7024**	**HK7024**

* Other products also available

https://nppnovoteh.com

6. NEEDLE ROLLER BEARINGS AND RELATED BEARINGS

6.3. Needle roller and cage assemblies – types K, KK



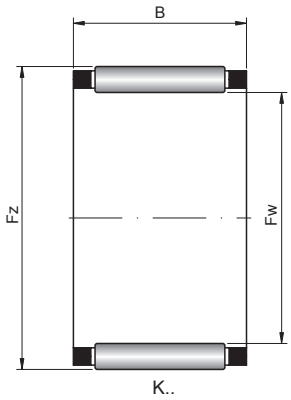

3 – 14 mm

Shaft [mm]	Bearing No.	Dimensions [mm]			Weight [kg]	Basic load ratings [kN]		Rotational speed [rpm]	
		Fw	Fz	B		dyn. C	stat. C_0	limiting	reference
3	**K03x05x09**	3	5	9	0,0003	1,71	1,48	50000	95000
	K03x06x07	3	6	7	0,0004	1,43	0,97	47000	85000
4	**K04x07x07**	4	7	7	0,0005	1,74	1,27	43000	70000
	K04x07x10	4	7	10	0,0007	2,33	1,84	43000	70000
5	**K05x08x08**	5	8	8	0,0007	2,35	1,92	39000	55000
	K05x08x10	5	8	10	0,0009	3,00	2,65	39000	55000
	K05X09X10	5	9	10	0,0013	3,08	2,62	39000	55000
	K05x09x13	5	9	13	0,00165	3,65	3,38	39000	55000
6	**K06x09x08**	6	9	8	0,0008	2,60	2,28	37000	48000
	K06x09x10	6	9	10	0,001	3,35	3,15	37000	47000
	K06x10x13	6	10	13	0,0019	3,80	3,10	35000	46000
7	**K07x10x08**	7	10	8	0,0009	2,85	2,65	34000	42000
	K07x10x10	7	10	10	0,0012	3,65	3,60	34000	41000
8	**K08x11x08**	8	11	8	0,0011	3,10	3,00	32000	37000
	K08x11x10	8	11	10	0,0013	3,95	4,10	32000	36000
	K08x11x13	8	11	13	0,0017	5,10	5,80	32000	36000
	K08x12x10	8	12	10	0,0018	4,70	0,55	32000	32000
9	**K09x12x10**	9	12	10	0,0015	4,50	5,00	31000	32000
	K09x12x13	9	12	13	0,0019	5,90	7,10	31000	31000
10	**K10X13X08**	10	13	8	0,0015	3,45	4,10	29000	29000
	K10x13x10	10	13	10	0,0016	4,75	5,50	29000	29000
	K10x13x13	10	13	13	0,0021	6,20	7,80	29000	29000
	K10x13x16	10	13	16	0,004	7,10	9,30	29000	29000
	K10x14x10	10	14	10	0,0022	5,80	6,00	29000	27000
	K10x14x13	10	14	13	0,0029	7,50	8,40	29000	27000
	K10X14X17	10	14	17	0,0036	8,72	11,20	29000	27000
	K10x16x12	10	16	12	0,0043	8,10	7,20	28000	25000
11	**K11x14x10**	11	14	10	0,0017	5,80	6,00	29000	27000
12	**K12X15X08**	12	15	8	0,0026	3,75	4,78	24000	16000
	K12x15x09	12	15	9	0,0027	3,40	3,70	27000	25000
	K12x15x10	12	15	10	0,0029	4,90	6,10	27000	25000
	K12x15x13	12	15	13	0,0024	6,40	8,50	27000	25000
	K12X15X17	12	15	17	0,0031	8,28	13,20	24000	16000
	K12x15x20	12	15	20	0,0038	8,00	9,40	27000	25000
	KK12x15x20	12	15	20	0,0038	7,50	9,20	22000	19000
	K12x16x10	12	16	10	0,004	6,40	8,40	28000	24000
	K12x16x13	12	16	13	0,0055	8,00	9,40	27000	23000
	K12X16X17	12	16	17	0,0072	9,82	13,50	24000	16000
	K12x17x13	12	17	13	0,0044	9,60	10,40	26000	22000
	K12x17x14	12	17	14	0,0074	9,60	10,40	26000	22000
	K12x18x12	12	18	12	0,006	10,00	9,90	26000	21000
13	**K13x18x15**	13	18	15	0,0079	10,00	9,90	26000	21000
14	**K14x17x17**	14	17	17	0,0068	10,00	9,90	26000	21000
	K14x18x10	14	18	10	0,004	7,10	8,50	25000	20000
	K14X18X13	14	18	13	0,0063	8,28	11,50	22000	15000

- warehouse - order - phone

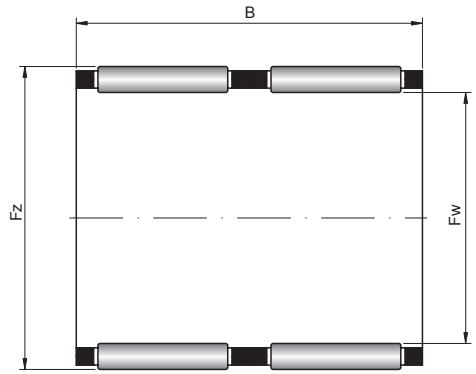

KK..

Basic makes*			Bearing No.
-	TN	K or KK	
			K03x05x09
			K03x06x07
			K04x07x07
			K04x07x10
			K05x08x08
			K05x08x10
			K05X09X10
			K05x09x13
			K06x09x08
			K06x09x10
			K06x10x13
			K07x10x08
			K07x10x10
			K08x11x08
			K08x11x10
			K08x11x13
			K08x12x10
			K09x12x10
			K09x12x13
			K10X13X08
			K10x13x10
			K10x13x13
			K10x13x16
			K10x14x10
			K10x14x13
			K10X14X17
			K10x16x12
			K11x14x10
			K12X15X08
			K12x15x09
			K12x15x10
			K12x15x13
			K12X15X17
			K12x15x20
			KK12x15x20
			K12x16x10
			K12x16x13
			K12X16X17
			K12x17x13
			K12x17x14
			K12x18x12
			K13x18x15
			K14x17x17
			K14x18x10
			K14X18X13

* Other products also available



https://nppnovoteh.com

6. NEEDLE ROLLER BEARINGS AND RELATED BEARINGS

6.3. Needle roller and cage assemblies – types K, KK



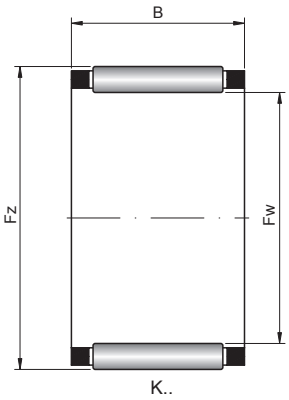

14 – 18 mm

Shaft [mm]	Bearing No.	Dimensions [mm]			Weight [kg]	Basic load ratings [kN]		Rotational speed [rpm]	
		Fw	Fz	B		dyn. C	stat. C_0	limiting	reference
14 cont.	**K14x18x13**	14	18	13	0,0063	8,20	10,10	25000	21000
	K14x18x14	14	18	14	0,0068	8,20	10,10	25000	21000
	K14x18x15	14	18	15	0,005	9,50	12,30	25000	20000
	K14x18x17	14	18	17	0,0081	10,80	14,40	25000	20000
	K14X19X10	14	19	10	0,0044	6,05	6,62	22000	15000
	K14X19X13	14	19	13	0,0067	8,35	9,98	22000	15000
	K14X19X17	14	19	17	0,0092	11,20	14,50	22000	15000
	K14x20x12	14	20	12	0,0086	10,30	10,60	24000	19000
	K14X20X17	14	20	17	0,0117	12,80	15,50	22000	15000
15	**K15x18x14**	15	18	14	0,0053	8,35	9,98	22000	15000
	K15x18x16	15	18	16	0,0059	8,35	9,98	22000	15000
	K15x18x17	15	18	17	0,0064	8,00	12,10	25000	21000
	K15x18x22	15	18	22	0,0083	10,30	10,60	24000	19000
	KK15x18x22	15	18	22	0,0083	10,30	10,60	24000	19000
	K15x19x10	15	19	10	0,0051	7,50	9,20	24000	19000
	K15x19x13	15	19	13	0,007	8,50	10,90	24000	19000
	K15x19x17	15	19	17	0,0095	11,30	15,60	24000	19000
	K15x19x24	15	19	24	0,0105	12,80	15,50	22000	15000
	KK15x19x24	15	19	24	0,0105	12,80	15,50	22000	15000
	K15X20X10	15	20	10	0,006	6,40	7,22	20000	14000
	K15x20x13	15	20	13	0,007	9,90	11,50	24000	29000
	K15X20X17	15	20	17	0,012	11,80	15,80	20000	14000
	K15x21x15	15	21	15	0,011	14,30	16,40	24000	17000
	K15X21X17	15	21	17	0,015	12,80	15,80	20000	14000
	K15x21x21	15	21	21	0,017	19,40	24,30	24000	17000
16	**K16x20x10**	16	20	10	0,0055	7,80	9,90	24000	18000
	K16x20x13	16	20	13	0,0071	8,90	11,80	24000	18000
	K16x20x17	16	20	17	0,0092	11,70	16,80	24000	18000
	K16x20x20	16	20	20	0,011	11,70	16,80	24000	18000
	K16x22x12	16	22	12	0,01	11,50	12,50	23000	17000
	K16x22x13	16	22	13	0,012	11,50	12,50	23000	17000
	K16x22x16	16	22	16	0,013	14,80	17,50	23000	17000
	K16X22X17	16	22	17	0,015	14,80	17,50	23000	17000
	K16x22x20	16	22	20	0,017	18,30	22,80	23000	16000
	K16x24x20	16	24	20	0,022	21,40	23,50	22000	15000
17	**K17x21x10**	17	21	10	0,0055	8,10	10,60	23000	17000
	K17x21x13	17	21	13	0,0065	10,40	14,60	23000	17000
	K17x21x15	17	21	15	0,0089	10,40	14,60	23000	17000
	K17x21x17	17	21	17	0,0095	12,20	17,90	23000	17000
	K17x22x20	17	22	20	0,015	12,20	17,90	23000	17000
	K17x23x15	17	23	15	0,014	14,50	18,80	18000	12000
	K17X23X17	17	23	17	0,015	14,50	18,80	18000	12000
	K17X23X20	17	23	20	0,016	16,80	23,20	18000	12000
18	**K18x22x10**	18	22	10	0,0061	8,40	11,30	22000	16000
	K18x22x13	18	22	13	0,008	9,20	12,70	22000	17000
	K18x22x14	18	22	14	0,0086	9,20	12,70	22000	17000
	K18x22x17	18	22	17	0,011	12,10	18,00	22000	16000
	K18x23x20	18	23	20	0,015	20,20	27,00	22000	14000
	K18x24x12	18	24	12	0,012	12,80	14,90	22000	15000
	K18x24x13	18	24	13	0,013	13,10	15,30	22000	15000
	K18X24X17	18	24	17	0,016	14,20	19,00	17000	11000
	K18x24x20	18	24	20	0,018	20,20	27,00	22000	14000

- warehouse - order - phone

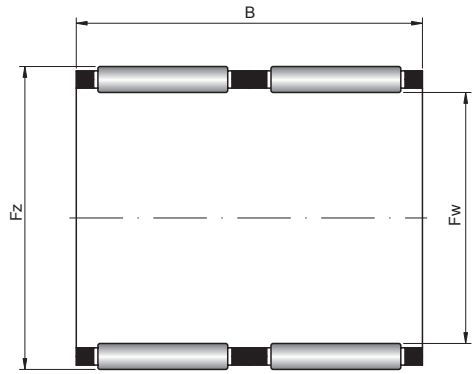

KK..

Basic makes*			Bearing No.
-	TN	K or KK	
			K14x18x13
			K14x18x14
			K14x18x15
			K14x18x17
			K14X19X10
			K14X19X13
			K14X19X17
			K14x20x12
			K14X20X17
			K15x18x14
			K15x18x16
			K15x18x17
			K15x18x22
			KK15x18x22
			K15x19x10
			K15x19x13
			K15x19x17
			K15x19x24
			KK15x19x24
			K15X20X10
			K15x20x13
			K15X20X17
			K15x21x15
			K15X21X17
			K15x21x21
			K16x20x10
			K16x20x13
			K16x20x17
			K16x20x20
			K16x22x12
			K16x22x13
			K16x22x16
			K16X22X17
			K16x22x20
			K16x24x20
			K17x21x10
			K17x21x13
			K17x21x15
			K17x21x17
			K17x22x20
			K17x23x15
			K17X23X17
			K17X23X20
			K18x22x10
			K18x22x13
			K18x22x14
			K18x22x17
			K18x23x20
			K18x24x12
			K18x24x13
			K18X24X17
			K18x24x20

* Other products also available



https://nppnovoteh.com

6. NEEDLE ROLLER BEARINGS AND RELATED BEARINGS

6.3. Needle roller and cage assemblies – types K, KK



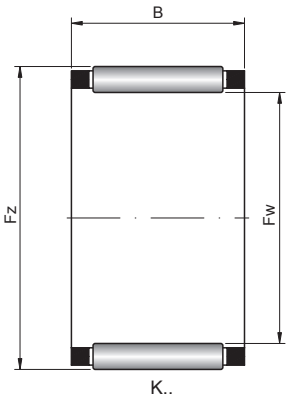

18 – 25 mm

Shaft [mm]	Bearing No.	Dimensions [mm]			Weight [kg]	Basic load ratings [kN]		Rotational speed [rpm]	
		Fw	Fz	B		dyn. C	stat. C_0	limiting	reference
18 cont.	**K18X24X30**	18	24	30	0,024	24,50	38,20	17000	11000
	K18x25x14	18	25	14	0,015	13,10	15,30	22000	15000
	K18x25x22	18	25	22	0,023	23,10	29,00	22000	14000
	K18x26x20	18	26	20	0,027	20,20	27,00	22000	14000
	K18x28x16	18	28	16	0,024	20,20	27,00	22000	14000
19	**K19x23x13**	19	23	13	0,008	9,50	13,50	22000	16000
	K19x23x17	19	23	17	0,011	12,50	19,20	22000	15000
20	**K20x24x10**	20	24	10	0,0065	8,90	12,60	21000	15000
	K20x24x12	20	24	12	0,008	13,10	15,30	22000	15000
	K20x24x13	20	24	13	0,009	9,80	14,30	21000	15000
	K20x24x17	20	24	17	0,012	12,90	20,40	21000	15000
	K20x26x12	20	26	12	0,011	13,40	16,20	21000	13000
	K20x26x13	20	26	13	0,012	14,40	17,90	21000	14000
	K20x26x17	20	26	17	0,016	19,20	26,00	21000	13000
	K20x26x20	20	26	20	0,019	21,10	29,00	21000	13000
	K20x28x16	20	28	16	0,02	20,20	27,00	22000	14000
	K20x28x20	20	28	20	0,027	23,90	28,50	20000	13000
	K20x28x25	20	28	25	0,032	30,50	39,00	20000	13000
	K20x30x30	20	30	30	0,049	35,50	41,50	20000	13000
21	**K21x25x13**	21	25	13	0,009	10,10	15,10	21000	14000
	K21x25x17	21	25	17	0,012	19,20	26,00	21000	13000
22	**K22x26x10**	22	26	10	0,0075	9,10	13,40	20000	13000
	K22x26x13	22	26	13	0,0094	10,40	15,90	20000	14000
	K22x26x17	22	26	17	0,012	13,70	22,70	20000	13000
	K22x27x17	22	27	17	0,017	19,20	26,00	21000	13000
	KK22x27x40	22	27	40	0,038	35,50	41,50	20000	13000
	K22x28x13	22	28	13	0,015	20,20	27,00	22000	14000
	K22x28x17	22	28	17	0,018	19,40	27,00	20000	12000
	K22X28X20	22	28	20	0,021	19,20	29,50	15000	9500
	K22x29x16	22	29	16	0,016	20,00	25,50	19000	12000
	K22x30x15	22	30	15	0,018	20,10	23,40	19000	12000
	K22x32x24	22	32	24	0,043	34,00	40,00	18000	11000
	K22x32x30	22	32	30	0,054	35,50	41,50	20000	13000
23	**K23x28x24**	23	28	24	0,023	19,20	29,50	15000	9500
	K23x35x16	23	35	16	0,03	24,50	23,90	17000	11000
24	**K24x28x10**	24	28	10	0,085	9,60	14,80	19000	12000
	K24x28x13	24	28	13	0,01	11,00	17,60	19000	13000
	K24x28x16	24	28	16	0,017	11,00	17,60	19000	13000
	K24x28x17	24	28	17	0,013	14,50	25,00	19000	12000
	K24x29x13	24	29	13	0,0135	19,50	27,50	18000	12000
	K24x30x17	24	30	17	0,019	19,50	27,50	18000	12000
	K24x30x22	24	30	22	0,027	19,50	27,50	18000	12000
	KK24x30x31	24	30	31	0,039	27,50	43,50	18000	12000
25	**K25x29x10**	25	29	10	0,0085	9,90	15,40	18000	12000
	K25x29x13	25	29	13	0,011	11,30	18,40	18000	12000
	K25x29x17	25	29	17	0,014	14,90	26,00	18000	12000
	K25x30x10	25	30	10	0,01	9,90	15,40	18000	12000
	K25x30x13	25	30	13	0,013	11,30	18,40	18000	12000
	K25x30x17	25	30	17	0,016	18,70	30,00	18000	11000

- warehouse - order - phone

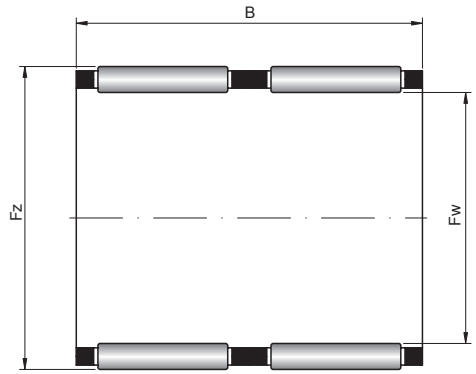

KK..

Basic makes*			Bearing No.
-	TN	K or KK	
			K18X24X30
			K18x25x14
			K18x25x22
			K18x26x20
			K18x28x16
			K19x23x13
			K19x23x17
			K20x24x10
			K20x24x12
			K20x24x13
			K20x24x17
			K20x26x12
			K20x26x13
			K20x26x17
			K20x26x20
			K20x28x16
			K20x28x20
			K20x28x25
			K20x30x30
			K21x25x13
			K21x25x17
			K22x26x10
			K22x26x13
			K22x26x17
			K22x27x17
			KK22x27x40
			K22x28x13
			K22x28x17
			K22X28X20
			K22x29x16
			K22x30x15
			K22x32x24
			K22x32x30
			K23x28x24
			K23x35x16
			K24x28x10
			K24x28x13
			K24x28x16
			K24x28x17
			K24x29x13
			K24x30x17
			K24x30x22
			KK24x30x31
			K25x29x10
			K25x29x13
			K25x29x17
			K25x30x10
			K25x30x13
			K25x30x17

* Other products also available



https://nppnovoteh.com

6. NEEDLE ROLLER BEARINGS AND RELATED BEARINGS

6.3. Needle roller and cage assemblies – types K, KK



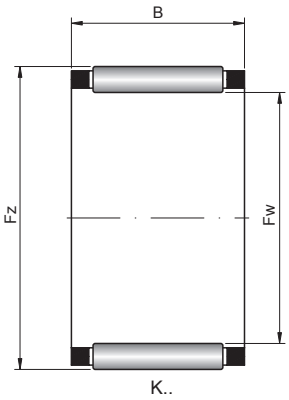

25 – 32 mm

Shaft [mm]	Bearing No.	Dimensions [mm]			Weight [kg]	Basic load ratings [kN]		Rotational speed [rpm]	
		Fw	Fz	B		dyn. C	stat. C_0	limiting	reference
25 cont.	**K25x30x20**	25	30	20	0,018	21,70	36,50	18000	11000
	KK25x30x26	25	30	26	0,027	21,40	35,50	18000	12000
	K25x31x14	25	31	14	0,017	11,30	18,40	18000	12000
	K25x31x17	25	31	17	0,019	19,60	28,50	18000	11000
	K25X31X20	25	31	20	0,021	20,80	33,80	14000	9000
	K25x31x21	25	31	21	0,022	24,70	38,00	18000	11000
	K25x31x24	25	31	24	0,03	24,70	38,00	18000	11000
	K25x32x15	25	32	15	0,021	11,30	18,40	18000	12000
	K25x32x16	25	32	16	0,021	20,80	27,50	17000	11000
	K25x33x20	25	33	20	0,032	28,50	38,00	17000	11000
	K25x33x24	25	33	24	0,039	34,00	47,00	17000	10000
	K25x33x25	25	33	25	0,043	34,00	47,00	17000	10000
	K25x35x30	25	35	30	0,065	47,00	62,00	16000	10000
26	**K26x30x10**	26	30	10	0,0114	9,90	15,40	18000	12000
	K26x30x13	26	30	13	0,0115	11,60	19,20	18000	12000
	K26x30x17	26	30	17	0,015	15,20	27,50	18000	12000
	KK26x30x22	26	30	22	0,0125	15,70	28,50	18000	12000
	K26x31x13	26	31	13	0,01	11,60	19,20	18000	12000
28	**K28x32x21**	28	32	21	0,018	24,70	38,00	18000	11000
	K28x33x13	28	33	13	0,013	15,30	24,20	16000	10000
	K28x33x17	28	33	17	0,017	19,70	33,50	16000	10000
	K28x33x27	28	33	27	0,019	26,20	53,20	13000	8500
	K28x34x17	28	34	17	0,024	21,80	33,50	16000	10000
	K28x34x20	28	34	20	0,025	24,70	38,00	18000	11000
	K28x35x16	28	35	16	0,024	21,50	29,50	16000	10000
	K28x35x18	28	35	18	0,027	24,00	34,00	16000	10000
	K28x35x27	28	35	27	0,047	26,20	53,20	13000	8500
	K28x36x20	28	36	20	0,039	24,70	38,00	18000	11000
29	**K29x34x27**	29	34	27	0,033	26,20	53,20	13000	8500
30	**K30x34x13**	30	34	13	0,014	12,30	21,70	15000	10000
	K30x35x13	30	35	13	0,014	15,60	25,50	15000	10000
	K30x35x17	30	35	17	0,019	19,60	34,00	15000	10000
	K30x35x20	30	35	20	0,015	24,00	34,00	16000	10000
	K30x35x23	30	35	23	0,029	24,70	38,00	18000	11000
	KK30x35x26	30	35	26	0,032	30,50	59,00	15000	9500
	K30x35x27	30	35	27	0,03	30,50	59,00	15000	9500
	K30x37x16	30	37	16	0,027	23,10	33,50	15000	9500
	K30x37x18	30	37	18	0,03	26,00	38,50	15000	9500
	K30X37X20	30	37	20	0,034	23,00	36,50	12000	8000
	K30X38X20	30	38	20	0,038	25,80	38,80	12000	8000
	K30x40x18	30	40	18	0,048	32,00	40,00	14000	9000
	K30x40x30	30	40	30	0,073	49,00	69,00	15000	9000
	K30x42x30	30	42	30	0,0908	49,00	69,00	15000	9000
32	**K32x36x15**	32	36	15	0,015	19,60	34,00	15000	10000
	K32x37x13	32	37	13	0,018	15,50	25,50	14000	9500
	K32x37x17	32	37	17	0,019	19,90	35,50	14000	9500
	K32x37x27	32	37	27	0,03	30,00	60,00	14000	9000
	K32x37x28	32	37	28	0,022	30,00	60,00	14000	9000
	K32x38x16	32	38	16	0,025	19,90	35,50	14000	9500
	K32x38x20	32	38	20	0,03	26,50	45,00	14000	9000
	K32x38x26	32	38	26	0,025	30,00	60,00	14000	9000

- warehouse - order - phone

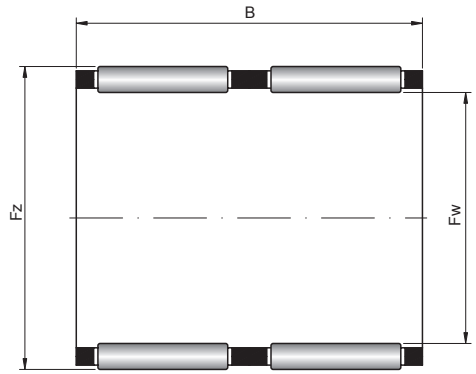

KK..

Basic makes*			Bearing No.
-	TN	K or KK	
			K25x30x20
			KK25x30x26
			K25x31x14
			K25x31x17
			K25X31X20
			K25x31x21
			K25x31x24
			K25x32x15
			K25x32x16
			K25x33x20
			K25x33x24
			K25x33x25
			K25x35x30
			K26x30x10
			K26x30x13
			K26x30x17
			KK26x30x22
			K26x31x13
			K28x32x21
			K28x33x13
			K28x33x17
			K28x33x27
			K28x34x17
			K28x34x20
			K28x35x16
			K28x35x18
			K28x35x27
			K28x36x20
			K29x34x27
			K30x34x13
			K30x35x13
			K30x35x17
			K30x35x20
			K30x35x23
			KK30x35x26
			K30x35x27
			K30x37x16
			K30x37x18
			K30X37X20
			K30X38X20
			K30x40x18
			K30x40x30
			K30x42x30
			K32x36x15
			K32x37x13
			K32x37x17
			K32x37x27
			K32x37x28
			K32x38x16
			K32x38x20
			K32x38x26

* Other products also available



https://nppnovoteh.com

6. NEEDLE ROLLER BEARINGS AND RELATED BEARINGS

6.3. Needle roller and cage assemblies – types K, KK



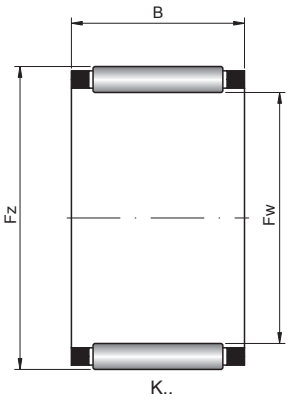

32 – 40 mm

Shaft [mm]	Bearing No.	Dimensions [mm]			Weight [kg]	Basic load ratings [kN]		Rotational speed [rpm]	
		Fw	Fz	B		dyn. C	stat. C_0	limiting	reference
32 cont.	**K32x39x14**	32	39	14	0,026	19,90	35,50	14000	9500
	K32x39x16	32	39	16	0,037	23,80	35,50	14000	9000
	K32x39x18	32	39	18	0,031	26,50	41,00	14000	9000
	K32X39X20	32	39	20	0,035	23,80	38,80	11000	7500
	K32X39X30	32	39	30	0,052	35,50	65,20	11000	7500
	K32x40x25	32	40	25	0,049	37,50	58,00	14000	8500
	K32x40x36	32	40	36	0,06	25,00	48,50	13000	9000
	KK32x40x42	32	40	42	0,077	50,00	84,00	14000	9000
	K32x42x42	32	42	42	0,105	53,00	79,00	12000	8000
	K32x46x32	32	46	32	0,119	66,00	84,00	13000	8000
34	**K34x44x26**	34	44	26	0,075	79,00	89,00	14000	8000
35	**K35x40x13**	35	40	13	0,019	16,20	28,00	13000	9000
	K35x40x17	35	40	17	0,021	20,80	38,50	13000	8500
	K35x40x19	35	40	19	0,027	20,80	38,50	13000	8500
	K35x40x25	35	40	25	0,031	29,50	60,00	13000	8500
	KK35x40x26	35	40	26	0,027	29,50	60,00	13000	8500
	K35x40x27	35	40	27	0,039	25,00	48,50	13000	9000
	KK35x40x30	35	40	30	0,043	39,00	68,00	13000	8500
	KK35x40x32	35	40	32	0,048	53,00	79,00	12000	8000
	K35x42x16	35	42	16	0,034	24,40	37,50	13000	8500
	K35x42x18	35	42	18	0,034	27,50	43,00	13000	8500
	K35x42x20	35	42	20	0,037	30,00	49,00	13000	8000
	K35x42x30	35	42	30	0,067	39,00	68,00	13000	8500
	K35x43x18	35	43	18	0,038	27,50	43,00	13000	8500
	K35x45x20	35	45	20	0,056	37,00	50,00	12000	8000
	K35x45x30	35	45	30	0,08	53,00	79,00	12000	8000
	K35x45x41	35	45	41	0,12	69,00	108,00	12000	8000
	K35x45x49	35	45	49	0,145	69,00	108,00	12000	8000
36	**K36x42x16**	36	42	16	0,029	24,40	37,50	13000	8500
37	**K37x42x17**	37	42	17	0,022	22,40	43,00	12000	8000
	K37x42x27	37	42	27	0,041	39,00	68,00	13000	8500
	KK37x42x28	37	42	28	0,039	39,00	68,00	13000	8500
	K37x44x19	37	44	19	0,045	27,50	43,00	13000	8500
	K37x45x26	37	45	26	0,061	53,00	79,00	12000	8000
38	**K38X43X13**	38	43	13	0,02	14,50	27,50	9500	6700
	K38x43x17	38	43	17	0,026	20,50	38,50	12000	8000
	K38x43x27	38	43	27	0,043	31,50	68,00	12000	8000
	K38x46x20	38	46	20	0,046	35,50	57,00	12000	7500
	K38x46x32	38	46	32	0,073	55,00	99,00	12000	7500
	K38x50x33	38	50	33	0,13	46,50	114,00	10000	7000
39	**K39x44x24**	39	44	24	0,038	31,50	68,00	12000	8000
	KK39x44x26	39	44	26	0,03	27,50	56,00	12000	8000
40	**K40x44x13**	40	44	13	0,02	17,60	32,50	12000	8000
	K40x45x13	40	45	13	0,022	17,60	32,50	12000	8000
	K40x45x17	40	45	17	0,028	21,40	41,50	12000	8000
	K40x45x21	40	45	21	0,037	21,70	43,00	11000	7500
	K40x45x27	40	45	27	0,044	33,00	73,00	12000	7500
	KK40x45x30	40	45	30	0,048	33,00	73,00	12000	7500
	K40x46x17	40	46	17	0,033	35,50	57,00	12000	7500

- warehouse - order - phone

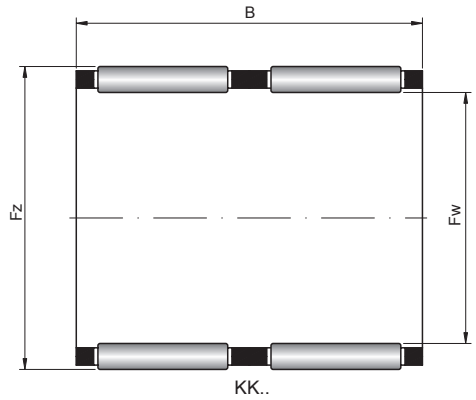

KK..

Basic makes*			Bearing No.
-	TN	K or KK	
			K32x39x14
			K32x39x16
			K32x39x18
			K32X39X20
			K32X39X30
			K32x40x25
			K32x40x36
			KK32x40x42
			K32x42x42
			K32x46x32
			K34x44x26
			K35x40x13
			K35x40x17
			K35x40x19
			K35x40x25
			KK35x40x26
			K35x40x27
			KK35x40x30
			KK35x40x32
			K35x42x16
			K35x42x18
			K35x42x20
			K35x42x30
			K35x43x18
			K35x45x20
			K35x45x30
			K35x45x41
			K35x45x49
			K36x42x16
			K37x42x17
			K37x42x27
			KK37x42x28
			K37x44x19
			K37x45x26
			K38X43X13
			K38x43x17
			K38x43x27
			K38x46x20
			K38x46x32
			K38x50x33
			K39x44x24
			KK39x44x26
			K40x44x13
			K40x45x13
			K40x45x17
			K40x45x21
			K40x45x27
			KK40x45x30
			K40x46x17

* Other products also available



https://nppnovoteh.com

6. NEEDLE ROLLER BEARINGS AND RELATED BEARINGS

6.3. Needle roller and cage assemblies – types K, KK



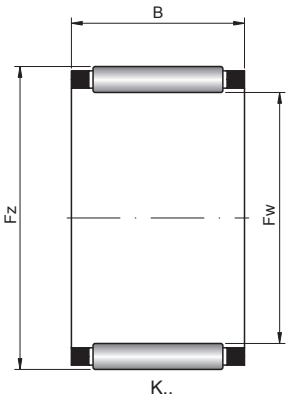

40 – 52 mm

Shaft [mm]	Bearing No.	Dimensions [mm]			Weight [kg]	Basic load ratings [kN]		Rotational speed [rpm]	
		Fw	Fz	B		dyn. C	stat. C_0	limiting	reference
40 cont.	**K40x47x17**	40	47	18	0,045	35,50	57,00	12000	7500
	K40x47x20	40	47	20	0,042	32,50	57,00	11000	7500
	K40x48x20	40	48	20	0,058	36,00	59,00	11000	7000
42	**K42x47x13**	42	47	13	0,022	17,80	33,50	11000	7500
	K42x47x17	42	47	17	0,029	21,70	43,00	11000	7500
	K42x47x25	42	47	25	0,026	25,60	52,50	11000	7500
	K42x47x27	42	47	27	0,047	31,80	78,50	11000	7500
	KK42x47x30	42	47	30	0,054	33,50	76,00	11000	7500
	K42x50x18	42	50	18	0,053	35,00	57,00	11000	7000
	K42x50x20	42	50	20	0,054	35,00	57,00	11000	7000
43	**K43x48x17**	43	48	17	0,029	21,60	43,00	11000	7500
	K43x48x27	43	48	27	0,046	33,50	75,00	11000	7000
	K43x50x18	43	50	18	0,049	22,50	46,00	10000	7000
45	**K45x49x19**	45	49	19	0,027	31,50	57,00	10000	6500
	K45x50x13	45	50	13	0,024	16,20	33,50	8000	5600
	K45x50x17	45	50	17	0,031	22,50	46,00	10000	7000
	K45x50x27	45	50	27	0,05	34,50	80,00	10000	7000
	K45x50x32	45	50	32	0,056	46,50	114,00	10000	7000
	KK45x51x36	45	51	36	0,085	58,50	148,00	8000	5600
	K45x52x18	45	52	18	0,051	31,50	57,00	10000	6500
	K45x52x21	45	52	21	0,033	31,50	57,00	10000	6500
	K45x53x20	45	53	20	0,063	39,00	67,00	10000	6500
	K45x53x21	45	53	21	0,067	38,50	67,00	10000	6500
	K45x53x22	45	53	22	0,069	38,00	67,00	10000	6500
	K45x53x28	45	53	28	0,078	52,00	98,00	10000	6500
46	**K49x65x38**	46	65	38	0,21	42,50	116,00	8000	5500
47	**K47x52x17**	47	52	17	0,032	23,30	49,00	10000	7000
	K47x52x27	47	52	27	0,051	35,00	83,00	10000	6500
	K47x53x25	47	53	25	0,053	35,00	83,00	10000	6500
	K47x55x26	47	55	26	0,084	35,00	83,00	10000	6500
	K47x55x28	47	55	28	0,062	35,00	83,00	10000	6500
48	**K48x53x17**	48	53	17	0,032	23,30	49,00	10000	7000
	K48x54x19	48	54	19	0,044	23,30	49,00	10000	7000
50	**K50x55x13,5**	50	55	13,5	0,027	18,20	36,50	9500	6500
	K50x55x17	50	55	17	0,032	22,10	47,00	9500	6500
	K50x55x20	50	55	20	0,039	26,50	60,00	9500	6500
	K50x55x30	50	55	30	0,059	39,00	97,00	9500	6500
	K50x57x18	50	57	18	0,053	33,50	63,00	9000	6000
	K50x58x20	50	58	20	0,065	35,50	62,00	9000	6500
	K50x58x25	50	58	25	0,081	44,00	81,00	9000	6000
	K50x58x35	50	58	35	0,115	52,50	100,00	9000	5500
52	**K52x57x12**	52	57	12	0,024	18,00	36,50	9000	6500
	K52X57X17	52	57	17	0,034	23,00	55,50	6700	4800
	K52X57X20	52	57	20	0,04	27,20	68,50	6700	4800
	K52X60X20	52	60	20	0,065	34,80	67,20	6700	4800
	K52x60x24	52	60	24	0,078	34,80	67,20	6700	4800
	K52X60X30	52	60	30	0,098	52,00	112,00	6700	4800

- warehouse - order - phone

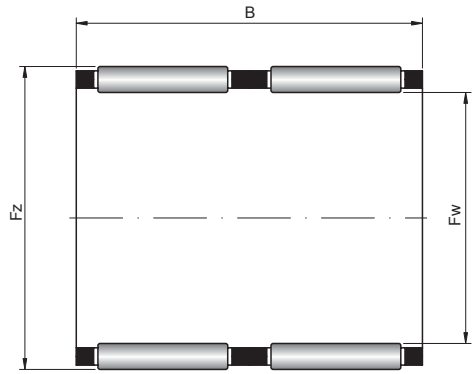

KK..

Basic makes*			Bearing No.
-	TN	K or KK	
			K40x47x17
			K40x47x20
			K40x48x20
			K42x47x13
			K42x47x17
			K42x47x25
			K42x47x27
			KK42x47x30
			K42x50x18
			K42x50x20
			K43x48x17
			K43x48x27
			K43x50x18
			K45x49x19
			K45x50x13
			K45x50x17
			K45x50x27
			K45x50x32
			KK45x51x36
			K45x52x18
			K45x52x21
			K45x53x20
			K45x53x21
			K45x53x22
			K45x53x28
			K49x65x38
			K47x52x17
			K47x52x27
			K47x53x25
			K47x55x26
			K47x55x28
			K48x53x17
			K48x54x19
			K50x55x13,5
			K50x55x17
			K50x55x20
			K50x55x30
			K50x57x18
			K50x58x20
			K50x58x25
			K50x58x35
			K52x57x12
			K52X57X17
			K52X57X20
			K52X60X20
			K52x60x24
			K52X60X30



* Other products also available

https://nppnovoteh.com

6. NEEDLE ROLLER BEARINGS AND RELATED BEARINGS

6.3. Needle roller and cage assemblies – types K, KK



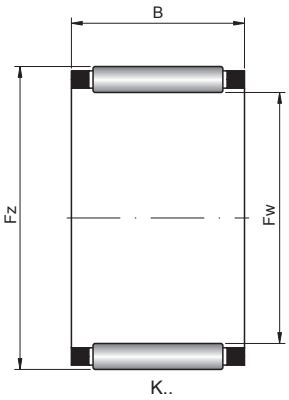

55 – 65 mm

Shaft [mm]	Bearing No.	Dimensions [mm]			Weight [kg]	Basic load ratings [kN]		Rotational speed [rpm]	
		Fw	Fz	B		dyn. C	stat. C_0	limiting	reference
55	**K55x60x13**	55	60	13	0,0298	19,00	38,00	8500	6000
	K55x60x17	55	60	17	0,037	22,00	47,00	8500	6000
	K55x60x20	55	60	20	0,044	28,50	66,00	8500	6000
	K55x60x27	55	60	27	0,061	38,00	97,00	8500	6000
	K55x60x30	55	60	30	0,069	41,00	108,00	8500	6000
	KK55x60x40	55	60	40	0,097	62,50	160,00	6700	4800
	K55X61X20	55	61	20	0,044	31,20	73,50	6700	4800
	K55X61X30	55	61	30	0,066	45,80	120,00	6700	4800
	K55x62x18	55	62	18	0,058	35,50	70,00	8500	5500
	K55X62X40	55	62	40	0,129	62,50	160,00	6700	4800
	K55x63x15	55	63	15	0,053	40,00	74,00	8500	5500
	K55x63x20	55	63	20	0,073	40,00	74,00	8500	5500
	K55x63x25	55	63	25	0,09	51,00	101,00	8500	5500
	K55X63X30	55	63	30	0,11	52,80	118,00	6700	4800
	K55x63x32	55	63	32	0,115	62,00	130,00	8500	5500
	KK55x63x32	55	63	32	0,105	62,00	130,00	8500	5500
56	**K56x61x20**	56	61	20	0,045	40,00	74,00	8500	5500
58	**K58x63x17**	58	63	17	0,042	51,00	101,00	8500	5500
	K58x64x19	58	64	19	0,053	62,00	128,00	8500	5500
	K58x65x18	58	65	18	0,058	35,00	70,00	8000	5500
	KK58x65x36	58	65	36	0,036	49,00	107,00	8000	6000
	K58X66X20	58	66	20	0,083	36,80	75,00	6300	4500
	K58X66X30	58	66	30	0,124	55,00	125,00	6300	4500
60	**K60x65x20**	60	65	20	0,051	29,50	72,00	8000	5500
	K60x65x30	60	65	30	0,072	42,50	116,00	8000	5500
	K60X66X20	60	66	20	0,063	33,20	88,00	6000	4300
	K60X66X30	60	66	30	0,094	48,50	132,00	6000	4300
	KK60x66x33	60	66	33	0,104	46,00	112,00	8000	5500
	KK60x66x40	60	66	40	0,116	58,00	151,00	8000	5500
	K60x68x20	60	68	20	0,08	43,50	85,00	7500	5000
	K60x68x23	60	68	23	0,092	49,50	101,00	7500	5000
	K60x68x25	60	68	25	0,097	53,00	111,00	7500	5000
	K60X68X25	60	68	25	0,107	47,00	105,00	6000	4300
	K60x68x27	60	68	27	0,098	53,00	111,00	7500	5000
	KK60x68x30	60	68	30	0,135	44,50	88,00	7500	6000
	KK60x68x34	60	68	34	0,14	49,00	107,00	8000	6000
	K60x75x42	60	75	42	0,24	118,00	199,00	7500	4800
62	**KK62x70x40**	62	70	40	0,175	66,00	146,00	7500	5500
63	**K63x70x21**	63	70	21	0,075	47,50	108,00	5600	4000
	K63x71x20	63	71	20	0,08	38,00	80,20	5600	4000
	K63X71X25	63	71	25	0,112	47,50	108,00	5600	4000
	K63X71X30	63	71	30	0,134	56,80	135,00	5600	4000
64	**K64x70x16**	64	70	16	0,053	28,00	60,00	7500	5500
65	**K65x70x20**	65	70	20	0,05	30,50	77,00	7500	5000
	K65x70x30	65	70	30	0,085	44,00	124,00	7500	5000
	K65X73X20	65	73	20	0,092	38,50	82,80	5600	4000
	K65x73x23	65	73	23	0,1	46,00	94,00	7000	5000
	K65X73X25	65	73	25	0,115	48,50	112,00	5600	4000
	K65x73x30	65	73	30	0,125	57,00	123,00	7000	5000

- warehouse - order - phone

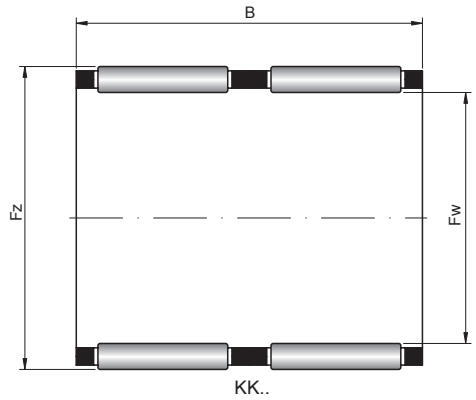

KK..

Basic makes*			Bearing No.
-	TN	K or KK	
			K55x60x13
			K55x60x17
			K55x60x20
			K55x60x27
			K55x60x30
			KK55x60x40
			K55X61X20
			K55X61X30
			K55x62x18
			K55X62X40
			K55x63x15
			K55x63x20
			K55x63x25
			K55X63X30
			K55x63x32
			KK55x63x32
			K56x61x20
			K58x63x17
			K58x64x19
			K58x65x18
			KK58x65x36
			K58X66X20
			K58X66X30
			K60x65x20
			K60x65x30
			K60X66X20
			K60X66X30
			KK60x66x33
			KK60x66x40
			K60x68x20
			K60x68x23
			K60x68x25
			K60X68X25
			K60x68x27
			KK60x68x30
			KK60x68x34
			K60x75x42
			KK62x70x40
			K63x70x21
			K63x71x20
			K63X71X25
			K63X71X30
			K64x70x16
			K65x70x20
			K65x70x30
			K65X73X20
			K65x73x23
			K65X73X25
			K65x73x30

* Other products also available



https://nppnovoteh.com

6. NEEDLE ROLLER BEARINGS AND RELATED BEARINGS

6.3. Needle roller and cage assemblies – types K, KK



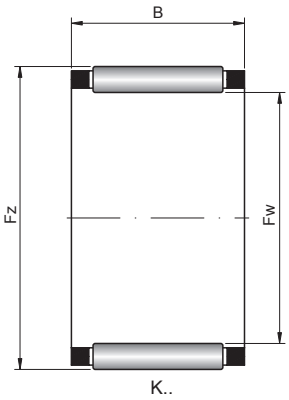

68 – 95 mm

Shaft [mm]	Bearing No.	Dimensions [mm]			Weight [kg]	Basic load ratings [kN]		Rotational speed [rpm]	
		Fw	Fz	B		dyn. C	stat. C_0	limiting	reference
68	**K68x74x20**	68	74	20	0,065	35,50	84,00	7000	5000
	K68x74x30	68	74	30	0,095	46,50	118,00	7000	5000
	KK68x74x35	68	74	35	0,116	48,50	125,00	7000	5000
	KK68x75x32	68	75	32	0,12	46,50	118,00	7000	5000
	K68X76X20	68	76	20	0,096	39,80	88,00	5300	3800
	K68X76X25	68	76	25	0,12	50,00	118,00	5300	3800
	K68X76X30	68	76	30	0,144	59,80	148,00	5300	3800
70	**K70x76x20**	70	76	20	0,07	36,00	86,00	6500	4900
	K70x76x30	70	76	30	0,1	52,00	139,00	6500	4700
	K70X78X20	70	78	20	0,099	40,50	90,50	5300	3800
	K70x78x25	70	78	25	0,115	50,80	122,00	5300	3800
	K70x78x30	70	78	30	0,135	60,00	135,00	6500	4700
	KK70x78x46	70	78	46	0,23	62,00	143,00	6000	4500
	K70x80x30	70	80	30	0,15	60,00	135,00	6500	4700
72	**K72X78X20**	72	78	20	0,09	36,50	98,80	5000	3600
	K72X78X30	72	78	30	0,112	53,50	160,00	5000	3600
	K72x80x20	72	80	20	0,094	41,50	85,00	6500	4700
	K72X80X25	72	80	25	0,127	51,50	125,00	5000	3600
	K72X80X30	72	80	30	0,152	61,50	155,00	5000	3600
73	**K73x79x20**	73	79	20	0,069	37,00	90,00	6500	4700
75	**K75x81x20**	75	81	20	0,072	37,50	94,00	6500	4600
	K75x81x30	75	81	30	0,106	52,00	143,00	6500	4500
	K75X83X20	75	83	20	0,1	72,50	98,20	4800	3400
	K75x83x23	75	83	23	0,115	50,00	109,00	6000	4500
	K75X83X25	75	83	25	0,123	53,20	132,00	4800	3400
	K75x83x30	75	83	30	0,147	62,00	143,00	6000	4500
	KK75x83x35	75	83	35	0,165	63,00	147,00	6000	4700
	KK75x83x46	75	83	40	0,215	72,50	98,20	4800	3400
80	**K80x86x20**	80	86	20	0,076	38,50	98,00	6000	4400
	K80x86x30	80	86	30	0,114	56,20	178,00	4500	3200
	K80X88X25	80	88	25	0,13	54,40	138,00	4500	3200
	K80x88x30	80	88	30	0,141	71,00	176,00	6000	4000
	K80X88X35	80	88	35	0,196	75,00	210,00	4500	3200
	KK80x88x40	80	88	40	0,204	76,00	192,00	6000	4300
	KK80x88x46	80	88	46	0,235	88,00	231,00	6000	4300
85	**K85x92x20**	85	92	20	0,092	44,50	108,00	5500	4100
	K85X92X30	85	92	30	0,142	60,80	178,00	4300	3000
	K85X93X20	85	93	20	0,13	45,00	112,00	4300	3000
	K85x93x25	85	93	25	0,14	56,50	148,00	4300	3000
	K85x93x30	85	93	30	0,16	67,50	185,00	4300	3000
	K85X95X45	85	95	45	0,337	108,00	290,00	4300	3000
90	**K90x97x20**	90	97	20	0,105	45,00	113,00	5000	3900
	K90X97X30	90	97	30	0,151	62,80	190,00	4000	2800
	K90x98x25	90	98	25	0,135	57,80	156,00	4000	2800
	K90x98x27	90	98	27	0,15	61,00	150,00	5000	3900
	K90x98x30	90	98	30	0,17	68,00	172,00	5000	3900
95	**K95X102X20**	95	102	20	0,11	43,20	120,00	3800	2600
	K95X102X30	95	102	30	0,165	64,50	202,00	3800	2600

- warehouse - order - phone

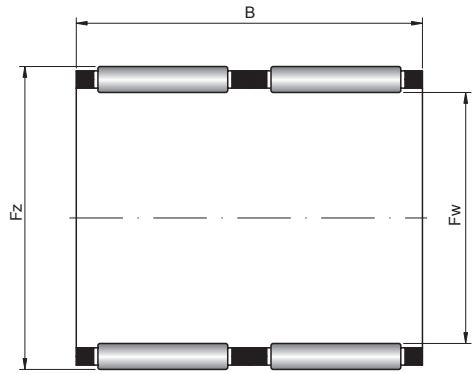

KK..

Basic makes*			Bearing No.
-	TN	K or KK	
			K68x74x20
			K68x74x30
			KK68x74x35
			KK68x75x32
			K68X76X20
			K68X76X25
			K68X76X30
			K70x76x20
			K70x76x30
			K70X78X20
			K70x78x25
			K70x78x30
			KK70x78x46
			K70x80x30
			K72X78X20
			K72X78X30
			K72x80x20
			K72X80X25
			K72X80X30
			K73x79x20
			K75x81x20
			K75x81x30
			K75X83X20
			K75x83x23
			K75X83X25
			K75x83x30
			KK75x83x35
			KK75x83x46
			K80x86x20
			K80x86x30
			K80X88X25
			K80x88x30
			K80X88X35
			KK80x88x40
			KK80x88x46
			K85x92x20
			K85X92X30
			K85X93X20
			K85x93x25
			K85x93x30
			K85X95X45
			K90x97x20
			K90X97X30
			K90x98x25
			K90x98x27
			K90x98x30
			K95X102X20
			K95X102X30

* Other products also available



https://nppnovoteh.com

6. NEEDLE ROLLER BEARINGS AND RELATED BEARINGS

6.3. Needle roller and cage assemblies – types K, KK



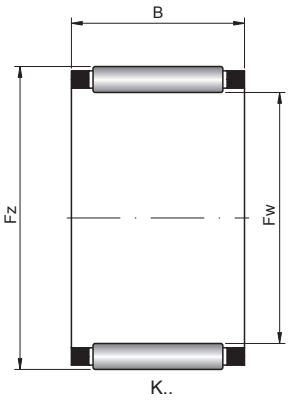

95 – 175 mm

Shaft [mm]	Bearing No.	Dimensions [mm]			Weight [kg]	Basic load ratings [kN]		Rotational speed [rpm]	
		Fw	Fz	B		dyn. C	stat. C_0	limiting	reference
95 cont.	**K95x103x30**	95	103	30	0,18	69,00	180,00	4900	3700
100	**K100X107X20**	100	107	20	0,095	44,50	125,00	3600	2400
	K100x107x21	100	107	21	0,12	48,00	127,00	4700	3600
	K100X107X30	100	107	30	0,17	66,50	212,00	3600	2400
	K100x108x27	100	108	27	0,175	57,00	143,00	4700	3800
	K100x108x30	100	108	30	0,19	71,00	188,00	4700	3600
	K100X109X30	100	108	30	0,19	72,80	218,00	3600	2400
105	**K105X112X20**	105	112	20	0,115	45,20	132,00	3400	2200
	K105x112x21	105	112	21	0,125	47,50	127,00	4500	3500
	K105x113x30	105	113	30	0,2	81,80	218,00	3400	2200
	K105X115X30	105	115	30	0,205	81,80	218,00	3400	2200
110	**K110x117x24**	110	117	24	0,145	56,00	158,00	4300	3400
	K110X117X25	110	117	25	0,15	58,20	185,00	3200	2000
	K110X117X35	110	117	35	0,211	80,20	278,00	3200	2000
	K110x118x30	110	118	30	0,215	78,00	219,00	4300	3200
	K110X120X30	110	120	30	0,287	85,00	228,00	3200	2000
115	**K115X122X25**	115	122	25	0,173	59,80	195,00	3200	2000
	K115X122X35	115	122	35	0,242	82,20	292,00	3200	2000
	K115x123x27	115	123	27	0,2	63,00	170,00	4100	3300
	K115X125X35	115	125	35	0,35	99,50	290,00	3200	2000
120	**K120x127x24**	120	127	24	0,165	59,00	174,00	4000	3100
	K120X127X25	120	127	25	0,168	61,20	202,00	3000	1900
	K120X127X35	120	127	35	0,243	84,20	305,00	3000	1900
125	**K125x133x35**	125	133	35	0,275	86,00	260,00	3800	2900
	K125X135X35	125	135	35	0,36	105,00	315,00	3000	1900
130	**K130x137x24**	130	137	24	0,17	61,00	186,00	3700	3000
	K130X137X25	130	137	25	0,18	63,20	218,00	2800	1800
	K130X137X35	130	137	35	0,25	87,20	328,00	2800	1800
135	**K135x143x35**	135	143	35	0,3	91,00	290,00	3500	2700
145	**K145x153x26**	145	153	26	0,25	74,00	225,00	3300	2700
	K145X153X30	145	153	30	0,262	88,50	315,00	2400	1600
	K145x153x36	145	153	36	0,3	103,00	405,00	2300	1400
150	**K150x160x46**	150	160	46	0,57	147,00	470,00	3200	2100
155	**K155x163x26**	155	163	26	0,265	75,00	236,00	3100	2600
	K155X163X30	155	163	30	0,304	91,50	338,00	2200	1500
	K155x163x36	155	163	36	0,355	108,00	440,00	2100	1400
160	**K160x170x46**	160	170	46	0,55	110,00	460,00	2000	1300
165	**K165x173x26**	165	173	26	0,285	81,00	265,00	2900	2300
	K165X173X35	165	173	30	0,322	108,00	432,00	2200	1500
170	**K170x180x46**	170	180	46	0,62	145,00	548,00	1800	1200
175	**K175x183x32**	175	183	32	0,36	99,00	350,00	2700	2100

- warehouse - order - phone

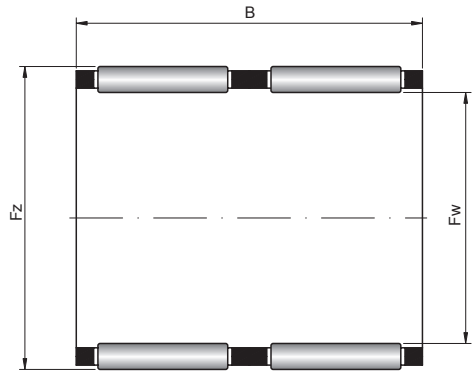

KK..

Basic makes*			Bearing No.
-	TN	K or KK	
●	●	●	K95x103x30
●	●	●	K100X107X20
●	●	●	K100x107x21
●	●	●	K100X107X30
●	●	●	K100x108x27
●	●	●	K100x108x30
●	●	●	K100X109X30
●	●	●	K105X112X20
●	●	●	K105x112x21
●	●	●	K105x113x30
●	●	●	K105X115X30
●	●	●	K110x117x24
●	●	●	K110X117X25
●	●	●	K110X117X35
●	●	●	K110x118x30
●	●	●	K110X120X30
●	●	●	K115X122X25
●	●	●	K115X122X35
●	●	●	K115x123x27
●	●	●	K115X125X35
●	●	●	K120x127x24
●	●	●	K120X127X25
●	●	●	K120X127X35
●	●	●	K125x133x35
●	●	●	K125X135X35
●	●	●	K130x137x24
●	●	●	K130X137X25
●	●	●	K130X137X35
●	●	●	K135x143x35
●	●	●	K145x153x26
●	●	●	K145X153X30
●	●	●	K145x153x36
●	●	●	K150x160x46
●	●	●	K155x163x26
●	●	●	K155X163X30
●	●	●	K155x163x36
●	●	●	K160x170x46
●	●	●	K165x173x26
●	●	●	K165X173X35
●	●	●	K170x180x46
●	●	●	K175x183x32

* Other products also available



https://nppnovoteh.com

6. NEEDLE ROLLER BEARINGS AND RELATED BEARINGS

6.3. Needle roller and cage assemblies – types K, KK



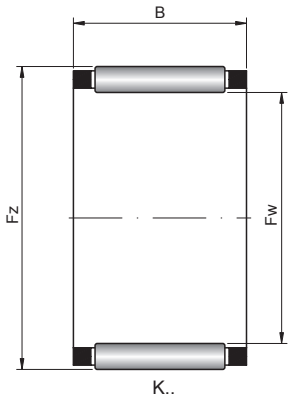

175 – 265 mm

Shaft [mm]	Bearing No.	Dimensions [mm]			Weight [kg]	Basic load ratings [kN]		Rotational speed [rpm]	
		Fw	Fz	B		dyn. C	stat. C_0	limiting	reference
175 cont.	**K175X183X35**	175	183	35	0,39	112,00	460,00	2000	1400
185	**K185X195X40**	185	195	35	0,59	145,00	548,00	1800	1200
	K185x195x37	185	195	37	0,605	128,00	425,00	2600	1900
195	**K195x205x37**	195	205	37	0,62	133,00	450,00	2500	1800
	K195X202X40	195	205	40	0,65	150,00	585,00	1700	1100
210	**K210x220x42**	210	220	42	0,74	154,00	560,00	2300	1600
220	**K220x230x42**	220	230	42	0,79	158,00	590,00	2200	1500
240	**K240x250x42**	240	250	42	0,85	164,00	630,00	2000	1400
265	**K265x280x50**	265	280	50	1,8	255,00	860,00	1800	1100

- warehouse - order - phone

https://nppnovoteh.com

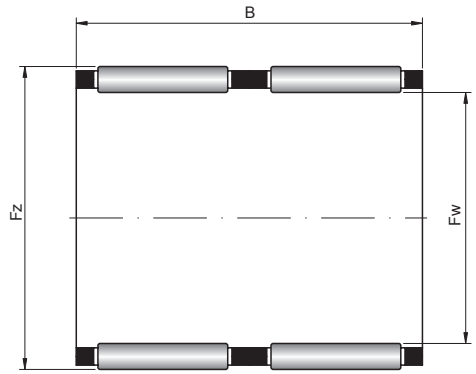

KK..

Basic makes*			Bearing No.
-	TN	K or KK	
			K175X183X35
			K185X195X40
			K185x195x37
			K195x205x37
			K195X202X40
			K210x220x42
			K220x230x42
			K240x250x42
			K265x280x50

* Other products also available



https://nppnovoteh.com

6. NEEDLE ROLLER BEARINGS AND RELATED BEARINGS

6.4. Needle roller and cage assemblies – types KBK, KZK



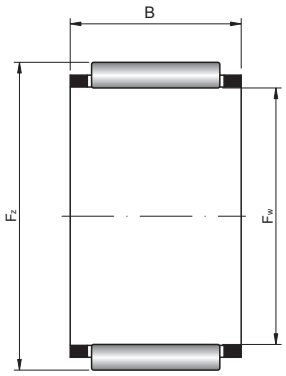

KBK..

9 – 40 mm

Shaft [mm]	Bearing No.	Dimensions [mm]				Weight [kg]	Basic load ratings [kN]	
		Fw	Fz	B	L		dyn. C	stat. C_0
9	**KBK9X13X12,5**	9	13	12,5	9,8	0,005	5,83	6,2
10	**KBK10X13X14,5**	10	13	14,5	10,8	0,0051	5,28	6,7
	KBK10X14X13	10	14	13	9,8	0,006	5,83	6,3
12	**KBK12X15X13**	12	15	13	9,8	0,0046	5,72	7,8
	KBK12X15X15	12	15	15	10,8	0,0056	5,83	8,15
	KBK12X15X17,5	12	15	17,5	13,8	0,0065	7,48	11,2
	KZK12X16X10	12	16	10	-	0,0035	6,27	7,2
	KBK12X16X13	12	16	13	9,8	0,0067	6,71	8
	KBK12X16X16	12	16	16	11,8	0,0085	7,65	9,65
	KZK12X17X10	12	17	10	-	0,005	7,04	7,5
13	**KBK13X17X14,5**	13	17	14,5	11,8	0,0071	8,25	10,6
	KBK13X17X17,5	13	17	17,5	13,8	0,0086	9,35	12,5
14	**KZK14X18X10**	14	18	10	-	0,004	6,93	8,65
	KBK14X18X13	14	18	13	9,8	0,0076	7,04	8,8
	KBK14X18X14,5	14	18	14,5	9,8	0,008	7,04	8,8
	KBK14X18X17	14	18	17	12,8	0,01	9,13	12,5
	KBK14X18X21	14	18	21	17,8	0,011	11,9	17,6
15	**KBK15X19X20**	15	19	20	15,8	0,013	10,8	15,6
16	**KBK16X20X20**	16	20	20	15,8	0,013	11,4	17
	KZK16X21X10	16	21	10	-	0,006	8,25	9,65
	KZK16X22X12	16	22	12	-	0,01	10,5	11,8
18	**KBK18X22X22**	18	22	22	15,8	0,017	13	20,8
	KBK18X22X24	18	22	24	17,8	0,018	13,8	22,4
	KBK18X22X25	18	22	25	19,8	0,019	13,4	21,6
	KZK18X24X12	18	24	12	-	0,01	11	12,9
	KZK18X24X13	18	24	13	-	0,013	12,5	15,3
	KZK18X24X15	18	24	15	-	0,014	12,5	15,6
20	**KBK20X24X30**	20	24	30	19,8	0,022	15,4	26,5
	KBK20X25X32	20	25	32	16,3	0,02	15,4	23,6
	KZK20X26X12	20	26	12	-	0,01	12,1	15
	KZK20X26X17	20	26	17	-	0,017	15,1	20
22	**KZK22X28X13**	22	28	13	-	0,015	13,2	17,6
	KZK22X28X16	22	28	16	-	0,018	14,7	20
	KZK22X29X15	22	29	15	-	0,015	17,2	22
	KZK22X29X16	22	29	16	-	0,016	17,2	22
25	**KZK25X32X16**	25	32	16	-	0,023	17,6	23,2
28	**KZK28X35X16**	28	35	16	-	0,027	18,3	25,5
30	**KZK30X37X16**	30	37	16	-	0,029	20,5	30,5
35	**KZK35X42X20**	35	42	20	-	0,04	27	45
40	**KZK40X48X20**	40	48	20	-	0,054	30,8	51

- warehouse - order - phone

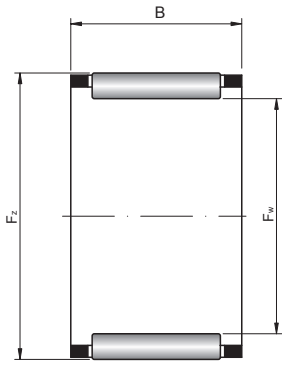

KZK..

Basic makes*		Bearing No.
-	TN	
◴	↷	**KBK9X13X12,5**
◴	↷	**KBK10X13X14,5**
◴	↷	**KBK10X14X13**
◴	↷	**KBK12X15X13**
◴	↷	**KBK12X15X15**
◴	↷	**KBK12X15X17,5**
◴	↷	**KZK12X16X10**
◴	↷	**KBK12X16X13**
◴	↷	**KBK12X16X16**
◴	↷	**KZK12X17X10**
◴	↷	**KBK13X17X14,5**
◴	↷	**KBK13X17X17,5**
◴	↷	**KZK14X18X10**
◴	↷	**KBK14X18X13**
◴	↷	**KBK14X18X14,5**
◴	↷	**KBK14X18X17**
◴	↷	**KBK14X18X21**
◴	↷	**KBK15X19X20**
◴	↷	**KBK16X20X20**
◴	↷	**KZK16X21X10**
◴	↷	**KZK16X22X12**
◴	↷	**KBK18X22X22**
◴	↷	**KBK18X22X24**
◴	↷	**KBK18X22X25**
◴	↷	**KZK18X24X12**
◴	↷	**KZK18X24X13**
◴	↷	**KZK18X24X15**
◴	↷	**KBK20X24X30**
◴	↷	**KBK20X25X32**
◴	↷	**KZK20X26X12**
◴	↷	**KZK20X26X17**
◴	↷	**KZK22X28X13**
◴	↷	**KZK22X28X16**
◴	↷	**KZK22X29X15**
◴	↷	**KZK22X29X16**
◴	↷	**KZK25X32X16**
◴	↷	**KZK28X35X16**
◴	↷	**KZK30X37X16**
◴	↷	**KZK35X42X20**
◴	↷	**KZK40X48X20**

* Other products also available



https://nppnovoteh.com

6. NEEDLE ROLLER BEARINGS AND RELATED BEARINGS

6.5. Adjustable needle roller bearings – type – PNA



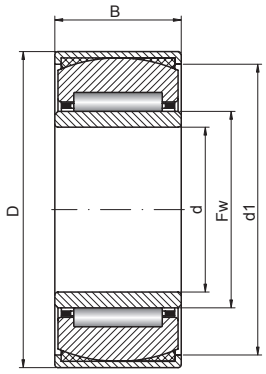

PNA..

12 – 45 mm

Shaft [mm]	Bearing No.	Dimensions [mm]					Weight [kg]	Basic load ratings [kN]	
		d	Fw	D	B	d1		dyn. C	stat. C_0
12	**PNA 12/28**	12	15	28	12	24,5	0,037	6,9	7,9
15	**RPNA 15/28**	*15*	15	28	12	24,5	0,032	6,9	7,9
	PNA 15/32	15	18	32	16	27	0,062	12,5	16,2
17	**PNA 17/35**	17	20	35	16	30,5	0,073	13	17,5
18	**RPNA 18/32**	*18*	18	32	16	27	0,052	12,5	16,2
20	**RPNA 20/35**	*20*	20	35	16	30,5	0,062	13	17,5
	PNA 20/42	20	25	42	20	36,5	0,136	18,8	30,5
22	**PNA 22/44**	22	28	44	20	38,5	0,145	22	34
25	**RPNA 25/42**	*25*	25	42	20	36,5	0,109	18,8	30,5
	PNA 25/47	25	30	47	20	42	0,157	22,6	36
28	**RPNA 28/44**	*28*	28	44	20	38,5	0,112	22	34
30	**RPNA 30/47**	*30*	30	47	20	42	0,125	22,6	36
	PNA 30/52	30	35	52	20	47,5	0,181	24,3	41,5
35	**RPNA 35/52**	*35*	35	52	20	47,5	0,131	24,3	41,5
	PNA 35/55	35	40	55	20	50,5	0,177	26	47
40	**RPNA 40/55**	*40*	40	55	20	50,5	0,141	26	47
	PNA 40/62	40	45	62	20	58	0,227	27,5	53
45	**RPNA 45/62**	*45*	45	62	20	58	0,176	27,5	53

- warehouse - order - phone

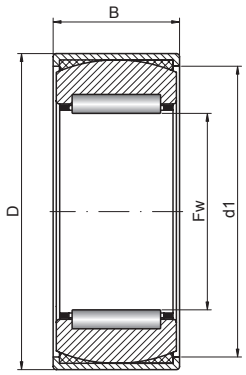

RPNA..

Limiting speed [rpm]	Basic makes*		Bearing No.
	-	TN	
24000	◴	↷	**PNA 12/28**
24000	◴	↷	**RPNA 15/28**
22000	◴	↷	**PNA 15/32**
21000	◴	↷	**PNA 17/35**
22000	◴	↷	**RPNA 18/32**
21000	◴	↷	**RPNA 20/35**
18000	◴	↷	**PNA 20/42**
16000	◴	↷	**PNA 22/44**
18000	◴	↷	**RPNA 25/42**
15000	◴	↷	**PNA 25/47**
16000	◴	↷	**RPNA 28/44**
15000	◴	↷	**RPNA 30/47**
13000	◴	↷	**PNA 30/52**
13000	◴	↷	**RPNA 35/52**
11000	◴	↷	**PNA 35/55**
11000	◴	↷	**RPNA 40/55**
10000	◴	↷	**PNA 40/62**
10000	◴	↷	**RPNA 45/62**

* Other products also available



https://nppnovoteh.com

6. NEEDLE ROLLER BEARINGS AND RELATED BEARINGS

6.6. Combined needle roller bearings – type – NX



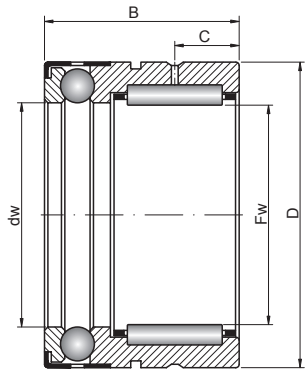

NX.. Z

7 – 35 mm

Shaft [mm]	Bearing No.	Inner ring IR	Dimensions [mm]					Weight [kg]
			Fw	D	B	C	dw	
7	**NX 7**	-	7	14	18	4,7	7	0,014
	NX 7 Z	-	7	14	18	4,7	7	0,014
10	**NX 10**	IR6X10X10	10	19	18	4,7	10	0,025
	NX 10 Z	IR6X10X10	10	19	18	4,7	10	0,025
12	**NX 12**	IR8X12X10	12	21	18	4,7	12	0,028
	NX 12 Z	IR8X12X10	12	21	18	4,7	12	0,028
15	**NX 15**	IR12X15X16	15	24	28	8	15	0,048
	NX 15 Z	IR12X15X16	15	24	28	8	15	0,048
17	**NX 17**	IR14X17X17	17	26	28	8	17	0,053
	NX 17 Z	IR14X17X17	17	26	28	8	17	0,053
20	**NX 20**	IR17X20X16	20	30	28	8	20	0,068
	NX 20 Z	IR17X20X16	20	30	28	8	20	0,068
25	**NX 25**	IR20X25X16	25	37	30	8	25	0,115
	NX 25 Z	IR20X25X16	25	37	30	8	25	0,115
30	**NX 30**	IR25X30X20	30	42	30	10	30	0,13
	NX 30 Z	IR25X30X20	30	42	30	10	30	0,13
35	**NX 35**	IR30X35X20	35	47	30	10	35	0,16
	NX 35 Z	IR30X35X20	35	47	30	10	35	0,16

- warehouse - order - phone

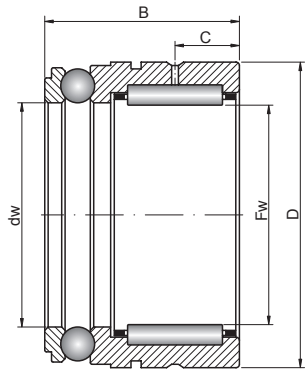

NX..

Basic load ratings [kN] radial dyn. C	radial stat. C_0	axial dyn. C	axial stat. C_0	Limiting speed [rpm]	Basic makes* -	Bearing No.
2,85	2,65	3,15	4,3	15000		**NX 7**
2,85	2,65	3,15	4,3	15000		**NX 7 Z**
4,45	3,7	4,6	7,2	11000		**NX 10**
4,45	3,7	4,6	7,2	11000		**NX 10 Z**
4,8	4,3	4,85	8,2	9500		**NX 12**
4,8	4,3	4,85	8,2	9500		**NX 12 Z**
10,7	12,7	5,6	10,4	8000		**NX 15**
10,7	12,7	5,6	10,4	8000		**NX 15 Z**
11,9	15	5,8	11,5	7500		**NX 17**
11,9	15	5,8	11,5	7500		**NX 17 Z**
13	17,5	7	14,7	6500		**NX 20**
13	17,5	7	14,7	6500		**NX 20 Z**
14,9	22,4	11,1	24,3	4900		**NX 25**
14,9	22,4	11,1	24,3	4900		**NX 25 Z**
22,6	36	11,7	28	4300		**NX 30**
22,6	36	11,7	28	4300		**NX 30 Z**
24,3	41,5	12,4	32,5	3700		**NX 35**
24,3	41,5	12,4	32,5	3700		**NX 35 Z**

* Other products also available



https://nppnovoteh.com

6. NEEDLE ROLLER BEARINGS AND RELATED BEARINGS

6.7. Combined needle roller bearings – types – NKIA & NKIB



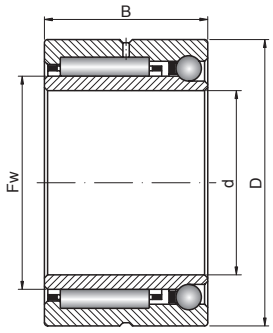

NKIA..

12 – 70 mm

Shaft [mm]	Bearing No.	Dimensions [mm]					Weight [kg]	Basic load ratings [kN] radial		axial	
		d	Fw	D	B	C		dyn. C	stat. C_0	dyn. C	stat. C_0
12	**NKIA 5901**	12	16	24	16	-	0,04	7,6	8,3	2,7	3,45
	NKIB 5901	12	16	24	16	16	0,04	7,6	8,3	2,7	3,45
15	**NKIA 5902**	15	20	28	18	-	0,05	10,6	13,6	2,9	4,2
	NKIB 5902	15	20	28	18	18	0,05	10,6	13,6	2,9	4,2
17	**NKIA 5903**	17	22	30	18	-	0,056	11	14,6	3,15	4,9
	NKIB 5903	17	22	30	18	18	0,056	11	14,6	3,15	4,9
20	**NKIA 5904**	20	25	37	23	-	0,103	21	25,5	4,9	7,4
	NKIB 5904	20	25	37	23	23	0,103	21	25,5	4,9	7,4
22	**NKIA 59/22**	22	28	39	23	-	0,118	22,8	29,5	5,3	8,6
	NKIB 59/22	22	28	39	23	23	0,118	22,8	29,5	5,3	8,6
25	**NKIA 5905**	25	30	42	23	-	0,13	23,6	31,5	5,4	9,3
	NKIB 5905	25	30	42	23	23	0,13	23,6	31,5	5,4	9,3
30	**NKIA 5906**	30	35	47	23	-	0,147	25	35,5	5,9	11,2
	NKIB 5906	30	35	47	23	23	0,147	25	35,5	5,9	11,2
35	**NKIA 5907**	35	42	55	27	-	0,243	31,5	50	7,4	14,9
	NKIB 5907	35	42	55	27	27	0,243	31,5	50	7,4	14,9
40	**NKIA 5908**	40	48	62	30	-	0,315	43	67	9,2	19,4
	NKIB 5908	40	48	62	30	30	0,315	43	67	9,2	19,4
45	**NKIA 5909**	45	52	68	30	-	0,375	45	73	9,6	21,4
	NKIB 5909	45	52	68	30	30	0,375	45	73	9,6	21,4
50	**NKIA 5910**	50	58	72	30	-	0,38	47	80	10,1	24,3
	NKIB 5910	50	58	72	30	30	0,38	47	80	10,1	24,3
55	**NKIA 5911**	55	63	80	34	-	0,55	58	100	12,1	29,5
	NKIB 5911	55	63	80	34	34	0,55	58	100	12,1	29,5
60	**NKIA 5912**	60	68	85	34	-	0,59	60	108	12,4	32
	NKIB 5912	60	68	85	34	34	0,59	60	108	12,4	32
65	**NKIA 5913**	65	72	90	34	-	0,635	61	112	12,8	34
	NKIB 5913	65	72	90	34	34	0,635	61	112	12,8	34
70	**NKIA 5914**	70	80	100	40	-	0,98	84	156	16,8	44,5
	NKIB 5914	70	80	100	40	40	0,98	84	156	16,8	44,5

- warehouse - order - phone

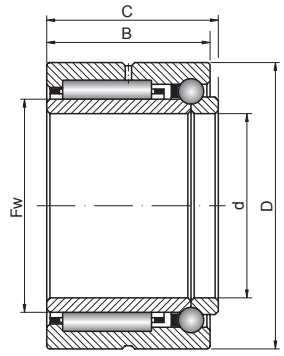

NKIB..

Rotational speed [rpm]		Basic makes*	Bearing No.
reference	limiting	-	
21000	24000		**NKIA 5901**
21000	24000		**NKIB 5901**
17000	22000		**NKIA 5902**
17000	22000		**NKIB 5902**
15000	21000		**NKIA 5903**
15000	21000		**NKIB 5903**
14000	17000		**NKIA 5904**
14000	17000		**NKIB 5904**
12000	16000		**NKIA 59/22**
12000	16000		**NKIB 59/22**
12000	15000		**NKIA 5905**
12000	15000		**NKIB 5905**
10000	13000		**NKIA 5906**
10000	13000		**NKIB 5906**
9000	11000		**NKIA 5907**
9000	11000		**NKIB 5907**
7500	9500		**NKIA 5908**
7500	9500		**NKIB 5908**
7000	8500		**NKIA 5909**
7000	8500		**NKIB 5909**
6500	8000		**NKIA 5910**
6500	8000		**NKIB 5910**
6000	7500		**NKIA 5911**
6000	7500		**NKIB 5911**
5500	7000		**NKIA 5912**
5500	7000		**NKIB 5912**
5500	6500		**NKIA 5913**
5500	6500		**NKIB 5913**
4900	6000		**NKIA 5914**
4900	6000		**NKIB 5914**

* Other products also available



https://nppnovoteh.com

6. NEEDLE ROLLER BEARINGS AND RELATED BEARINGS

6.8. Combined needle roller bearings – type – NKX



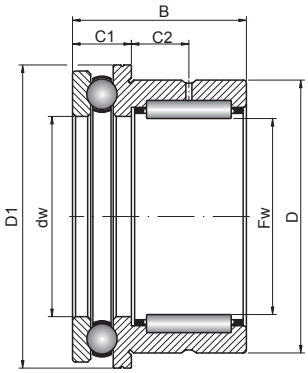

NKX..

10 – 70 mm

Shaft [mm]	Bearing No.	Inner ring IR	Dimensions [mm]								Weight [kg]
			Fw	D	D1	D2	B	C1	C2	dw	
10	**NKX 10**	IR7X10X16	10	19	24,1	-	23	9	6,5	10	0,034
	NKX 10 Z	IR7X10X16	10	19	-	25,2	23	9	6,5	10	0,036
12	**NKX 12**	IR9X12X16	12	21	26,1	-	23	9	6,5	12	0,038
	NKX 12 Z	IR9X12X16	12	21	-	27,2	23	9	6,5	12	0,04
15	**NKX 15**	IR12X15X16	15	24	28,1	-	23	9	6,5	15	0,044
	NKX 15 Z	IR12X15X16	15	24	-	29,2	23	9	6,5	15	0,047
17	**NKX 17**	IR14X17X17	17	26	30,1	-	25	9	8	17	0,053
	NKX 17 Z	IR14X17X17	17	26	-	31,2	25	9	8	17	0,055
20	**NKX 20**	IR17X20X20	20	30	35,1	-	30	10	10,5	20	0,083
	NKX 20 Z	IR17X20X20	20	30	-	36,2	30	10	10,5	20	0,09
25	**NKX 25**	IR20X25X20	25	37	42,1	-	30	11	9,5	25	0,125
	NKX 25 Z	IR20X25X20	25	37	-	43,2	30	11	9,5	25	0,132
30	**NKX 30**	IR25X30X20	30	42	47,1	-	30	11	9,5	30	0,141
	NKX 30 Z	IR25X30X20	30	42	-	48,2	30	11	9,5	30	0,148
35	**NKX 35**	IR30X35X20	35	47	52,1	-	30	12	9	35	0,163
	NKX 35 Z	IR30X35X20	35	47	-	53,2	30	12	9	35	0,168
40	**NKX 40**	IR35X40X20	40	52	60,1	-	32	13	10	40	0,2
	NKX 40 Z	IR35X40X20	40	52	-	61,2	32	13	10	40	0,208
45	**NKX 45**	IR40X45X20	45	58	65,2	-	32	14	9	45	0,252
	NKX 45 Z	IR40X45X20	45	58	-	66,5	32	14	9	45	0,265
50	**NKX 50**	IR45X50X25	50	62	70,2	-	35	14	10	50	0,28
	NKX 50 Z	IR45X50X25	50	62	-	71,5	35	14	10	50	0,3
60	**NKX 60**	IR50X60X25	60	72	85,2	-	40	17	12	60	0,36
	NKX 60 Z	IR50X60X25	60	72	-	86,5	40	17	12	60	0,38
70	**NKX 70**	IR60X70X25	70	85	95,2	-	40	18	11	70	0,5
	NKX 70 Z	IR60X70X25	70	85	-	96,5	40	18	11	70	0,52

- warehouse - order - phone

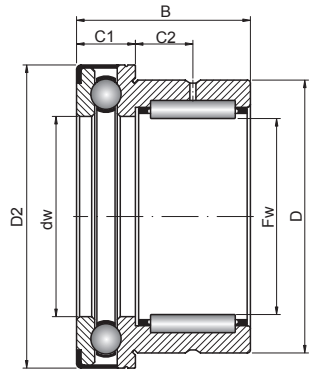

NKX.. Z

Basic load ratings [kN] radial dyn. C	radial stat. C_0	axial dyn. C	axial stat. C_0	Limiting speed [rpm]	Basic makes* -	Bearing No.
6,2	7,8	10	14	12000	◴	**NKX 10**
6,2	7,8	10	14	12000	◴	**NKX 10 Z**
9	11	10,3	15,4	11000	◴	**NKX 12**
9	11	10,3	15,4	11000	◴	**NKX 12 Z**
10,7	12,7	10,5	16,8	9500	◴	**NKX 15**
10,7	12,7	10,5	16,8	9500	◴	**NKX 15 Z**
11,9	15	10,8	18,2	8500	◴	**NKX 17**
11,9	15	10,8	18,2	8500	◴	**NKX 17 Z**
16,4	23,8	14,3	24,7	7500	◴	**NKX 20**
16,4	23,8	14,3	24,7	7500	◴	**NKX 20 Z**
18,8	30,5	19,6	37,5	6000	◴	**NKX 25**
18,8	30,5	19,6	37,5	6000	◴	**NKX 25 Z**
22,6	36	20,4	42	5000	◴	**NKX 30**
22,6	36	20,4	42	5000	◴	**NKX 30 Z**
24,3	41,5	21,2	47	4600	◴	**NKX 35**
24,3	41,5	21,2	47	4600	◴	**NKX 35 Z**
26	47	27	63	4000	◴	**NKX 40**
26	47	27	63	4000	◴	**NKX 40 Z**
27,5	53	28	69	3600	◴	**NKX 45**
27,5	53	28	69	3600	◴	**NKX 45 Z**
38	74	29	75	3300	◴	**NKX 50**
38	74	29	75	3300	◴	**NKX 50 Z**
42	90	41,5	113	2800	◴	**NKX 60**
42	90	41,5	113	2800	◴	**NKX 60 Z**
44,5	92	43	127	2400	◴	**NKX 70**
44,5	92	43	127	2400	◴	**NKX 70 Z**

* Other products also available



https://nppnovoteh.com

6. NEEDLE ROLLER BEARINGS AND RELATED BEARINGS

6.9. Combined needle roller bearings – type – NKXR



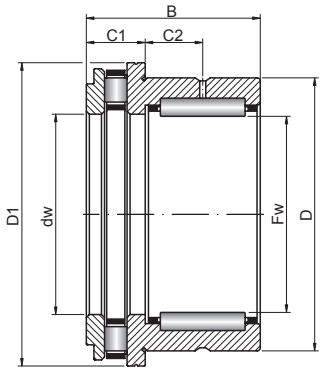

NKXR..

15 – 50 mm

Shaft [mm]	Bearing No.	Inner ring IR	Dimensions [mm]								Weight [kg]
			Fw	D	D1	D2	B	C1	C2	dw	
15	**NKXR 15**	IR12x15x16	15	24	28,1	-	23	9	6,5	15	0,042
	NKXR 15 Z	IR12x15x16	15	24	-	29,2	23	9	6,5	15	0,045
17	**NKXR 17**	IR14X17X17	17	26	30,1	-	25	9	8	17	0,05
	NKXR 17 Z	IR14X17X17	17	26	-	31,2	25	9	8	17	0,053
20	**NKXR 20**	IR17X20X20	20	30	35,1	-	30	10	10,5	20	0,08
	NKXR 20 Z	IR17X20X20	20	30	-	36,2	30	10	10,5	20	0,084
25	**NKXR 25**	IR20X25X20	25	37	42,1	-	30	11	9,5	25	0,12
	NKXR 25 Z	IR20X25X20	25	37	-	43,2	30	11	9,5	25	0,125
30	**NKXR 30**	IR25X30X20	30	42	47,1	-	30	11	9,5	30	0,135
	NKXR 30 Z	IR25X30X20	30	42	-	48,2	30	11	9,5	30	0,141
35	**NKXR 35**	IR30X35X20	35	47	52,1	-	30	12	9	35	0,157
	NKXR 35 Z	IR30X35X20	35	47	-	53,2	30	12	9	35	0,165
40	**NKXR 40**	IR35X40X20	40	52	60,1	-	32	13	10	40	0,204
	NKXR 40 Z	IR35X40X20	40	52	-	61,2	32	13	10	40	0,214
45	**NKXR 45**	IR40X45X20	45	58	65,2	-	32	14	9	45	0,244
	NKXR 45 Z	IR40X45X20	45	58	-	66,5	32	14	9	45	0,26
50	**NKXR 50**	IR45X50X25	50	62	70,2	-	35	14	10	60	0,268
	NKXR 50 Z	IR45X50X25	50	62	-	71,5	35	14	10	60	0,288

- warehouse - order - phone

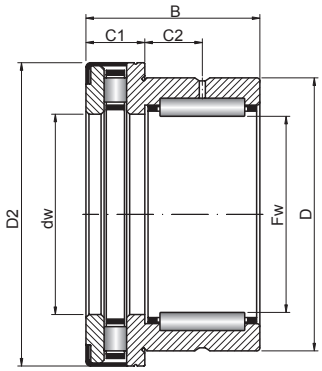

NKXR.. Z

Basic load ratings [kN] radial		axial		Limiting speed [rpm]		Basic makes*	Bearing No.
dyn. C	stat. C_0	dyn. C	stat. C_0	reference	limiting	-	
10,7	12,7	14,4	28,5	6500	13000	✓	**NKXR 15**
10,7	12,7	14,4	28,5	6500	13000	✓	**NKXR 15 Z**
11,9	15	15,9	33,5	5500	12000	✓	**NKXR 17**
11,9	15	15,9	33,5	5500	12000	✓	**NKXR 17 Z**
16,4	23,8	24,9	53	4200	10000	✓	**NKXR 20**
16,4	23,8	24,9	53	4200	10000	✓	**NKXR 20 Z**
18,8	30,5	33,5	76	3400	8500	✓	**NKXR 25**
18,8	30,5	33,5	76	3400	8500	✓	**NKXR 25 Z**
22,6	36	35,5	86	2900	7500	✓	**NKXR 30**
22,6	36	35,5	86	2900	7500	✓	**NKXR 30 Z**
24,3	41,5	39	101	2500	6500	✓	**NKXR 35**
24,3	41,5	39	101	2500	6500	✓	**NKXR 35 Z**
26	47	56	148	2000	6000	✓	**NKXR 40**
26	47	56	148	2000	6000	✓	**NKXR 40 Z**
27,5	53	59	163	1900	5000	✓	**NKXR 45**
27,5	53	59	163	1900	5000	✓	**NKXR 45 Z**
38	74	61	177	1700	4800	✓	**NKXR 50**
38	74	61	177	1700	4800	✓	**NKXR 50 Z**

* Other products also available



https://nppnovoteh.com

6. NEEDLE ROLLER BEARINGS AND RELATED BEARINGS

6.10. One-way clutches – type – HF



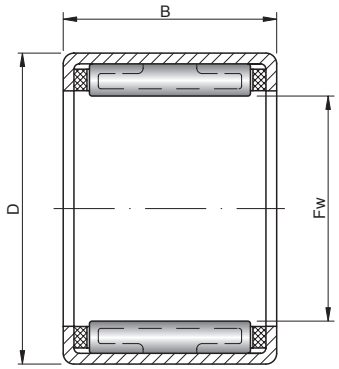

HF..

3 – 35 mm

Shaft [mm]	Bearing No.	Dimensions [mm]			Weight [kg]	Torque [Nm]	Limiting speed [rpm]	Basic makes*	Bearing No.
		Fw	D	B				-	
3	**HF0306**	3	6,5	6	0,001	0,18	22000	◴	**HF0306**
4	**HF0406**	4	8	6	0,001	0,34	18000	◴	**HF0406**
6	**HF0612**	6	10	12	0,003	1,76	13000	◴	**HF0612**
8	**HF0812**	8	12	12	0,0035	3,15	12000	◴	**HF0812**
10	**HF1012**	10	14	12	0,004	5,3	11000	◴	**HF1012**
12	**HF1216**	12	18	16	0,011	12,2	8000	◴	**HF1216**
14	**HF1416**	14	20	16	0,013	17,3	8000	◴	**HF1416**
16	**HF1616**	16	22	16	0,014	20,5	7500	◴	**HF1616**
18	**HF1816**	18	24	16	0,016	24,1	7500	◴	**HF1816**
20	**HF2016**	20	26	16	0,017	28,5	6500	◴	**HF2016**
25	**HF2520**	25	32	20	0,03	66	5500	◴	**HF2520**
30	**HF3020**	30	37	20	0,036	90	4500	◴	**HF3020**
35	**HF3520**	35	42	20	0,04	121	3900	◴	**HF3520**

- warehouse ◴ - order - phone * Other products also available



https://nppnovoteh.com

6. NEEDLE ROLLER BEARINGS AND RELATED BEARINGS

6.11. Internal rings for needle and cylindrical roller bearings – IR



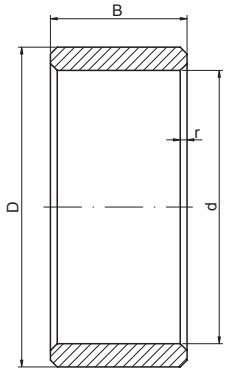

IR..

5 – 15 mm

Shaft [mm]	Bearing No.	Dimensions [mm]				Weight [kg]	Basic makes*
		d	D	B	r min.		-
5	**IR5x7x10**	5	7	10	0,3	0,0014	◴
	IR5x8x12	5	8	12	0,3	0,0028	◴
	IR5x8x16	5	8	16	0,3	0,0037	◴
6	**IR6x8x10**	6	8	10	0,3	0,0017	◴
	IR6x9x12	6	9	12	0,3	0,003	◴
	IR6x9x16	6	9	16	0,3	0,0043	◴
	IR6x10x10	6	10	10	0,3	0,0037	◴
	IR6x10x12	6	10	12	0,3	0,0046	◴
7	**IR7x9x10**	7	9	10	0,3	0,0019	◴
	IR7x10x10,5	7	10	10,5	0,3	0,0031	◴
	IR7x10x12	7	10	12	0,3	0,0036	◴
	IR7x10x16	7	10	16	0,3	0,0049	◴
8	**IR8x10x11**	8	10	11	0,3	0,0024	◴
	IR8x12x10	8	12	10	0,3	0,0048	◴
	IR8x12x10,5	8	12	10,5	0,3	0,005	◴
	IR8x12x12	8	12	12	0,3	0,0056	◴
	IR8x12x12,5	8	12	12,5	0,3	0,0059	◴
9	**IR9x12x11**	9	12	11	0,3	0,0041	◴
	IR9x12x12	9	12	12	0,3	0,0044	◴
	IR9x12x16	9	12	16	0,3	0,006	◴
10	**IR10x13x12,5**	10	13	12,5	0,3	0,0052	◴
	IR10x14x12	10	14	12	0,3	0,0073	◴
	IR10x14x13	10	14	13	0,3	0,0074	◴
	IR10x14x14	10	14	14	0,3	0,0081	◴
	IR10x14x16	10	14	16	0,3	0,0092	◴
	IR10x14x20	10	14	20	0,3	0,0115	◴
12	**IR12x15x12**	12	15	12	0,3	0,0057	◴
	IR12x15x12,5	12	15	12,5	0,3	0,0061	◴
	IR12x15x16	12	15	16	0,3	0,0076	◴
	IR12x15x16,5	12	15	16,5	0,3	0,0081	◴
	IR12x15x22,5	12	15	22,5	0,3	0,0109	◴
	IR12x16x12	12	16	12	0,3	0,0079	◴
	IR12x16x13	12	16	13	0,3	0,0085	◴
	IR12x16x14	12	16	14	0,3	0,0094	◴
	IR12x16x16	12	16	16	0,3	0,0107	◴
	IR12x16x20	12	16	20	0,3	0,0135	◴
	IR12x16x22	12	16	22	0,3	0,0149	◴
14	**IR14x17x17**	14	17	17	0,3	0,0095	◴
15	**IR15x18x12,5**	15	18	12,5	0,3	0,0072	◴
	IR15x18x16	15	18	16	0,3	0,0094	◴
	IR15x18x16,5	15	18	16,5	0,3	0,0098	◴
	IR15x19x16	15	19	16	0,3	0,0129	◴
	IR15x19x20	15	19	20	0,3	0,0163	◴
	IR15X19,3X11	15	19,3	11	0,3	0,01	◴
	IR15x20x12	15	20	12	0,3	0,0122	◴
	IR15x20x13	15	20	13	0,3	0,0135	◴
	IR15x20x14	15	20	14	0,3	0,0146	◴
	IR15x20x18	15	20	18	0,3	0,0189	◴

- warehouse ◴ - order - phone

15 – 25 mm

Shaft [mm]	Bearing No.	Dimensions [mm]				Weight [kg]	Basic makes*
		d	D	B	r min.		-
15 cont.	**IR15x20x23**	15	20	23	0,3	0,0244	◴
	IR15X21X13	15	21	13	0,3	0,017	◴
	IR15x22x20	15	22	20	0,3	0,031	◴
17	**IR17x20x16**	17	20	16	0,3	0,0106	◴
	IR17x20x16,5	17	20	16,5	0,3	0,0111	◴
	IR17x20x20	17	20	20	0,3	0,0135	◴
	IR17x20x20,5	17	20	20,5	0,3	0,0138	◴
	IR17x20x30,5	17	20	30,5	0,3	0,0206	◴
	IR17x21x16	17	21	16	0,3	0,015	◴
	IR17x21x20	17	21	20	0,3	0,018	◴
	IR17x22x13	17	22	13	0,3	0,0149	◴
	IR17x22x14	17	22	14	0,3	0,0164	◴
	IR17x22x16	17	22	16	0,3	0,0184	◴
	IR17x22x18	17	22	18	0,3	0,021	◴
	IR17x22x23	17	22	23	0,3	0,0271	◴
	IR17X22,1X12	17	22,1	12	0,3	0,014	◴
	IR17X22,1X16	17	22,1	16	0,3	0,019	◴
	IR17x24x20	17	24	20	0,3	0,0338	◴
	IR17X24,2X14	17	24,2	14	0,3	0,025	◴
20	**IR20x24x16**	20	24	16	0,3	0,015	◴
	IR20x24x20	20	24	20	0,3	0,0213	◴
	IR20x25x12,5	20	25	12,5	0,3	0,0163	◴
	IR20x25x16	20	25	16	0,3	0,024	◴
	IR20x25x16,5	20	25	16,5	0,3	0,0217	◴
	IR20x25x17	20	25	17	0,3	0,025	◴
	IR20x25x18	20	25	18	0,3	0,0242	◴
	IR20x25x20	20	25	20	0,3	0,0275	◴
	IR20x25x20,5	20	25	20,5	0,3	0,0274	◴
	IR20x25x23	20	25	23	0,3	0,031	◴
	IR20x25x26,5	20	25	26,5	0,3	0,038	◴
	IR20x25x30	20	25	30	0,3	0,0404	◴
	IR20x25x38,5	20	25	38,5	0,3	0,0525	◴
	IR20X26,5X14	20	26,5	14	0,3	0,025	◴
	IR20X26,5X18	20	26,5	18	0,3	0,032	◴
	IR20X27,5X15	20	27,5	15	0,3	0,032	◴
	IR20X27,5X21	20	27,5	21	0,3	0,045	◴
	IR20x28x20	20	28	20	0,3	0,0452	◴
	IR20x28x22	20	28	22	0,3	0,0506	◴
22	**IR22x26x16**	22	26	16	0,3	0,0182	◴
	IR22x26x20	22	26	20	0,3	0,023	◴
	IR22x28x17	22	28	17	0,3	0,0295	◴
	IR22x28x20	22	28	20	0,3	0,035	◴
	IR22x28x20,5	22	28	20,5	0,3	0,036	◴
	IR22x28x23	22	28	23	0,3	0,0413	◴
	IR22x28x30	22	28	30	0,3	0,0544	◴
25	**IR25x29x20**	25	29	20	0,3	0,0259	◴
	IR25x29x30	25	29	30	0,3	0,0393	◴
	IR25x30x12,5	25	30	12,5	0,3	0,02	◴
	IR25x30x16	25	30	16	0,3	0,0257	◴
	IR25x30x16,5	25	30	16,5	0,3	0,0267	◴
	IR25x30x17	25	30	17	0,3	0,0274	◴
	IR25x30x18	25	30	18	0,3	0,0298	◴

* Other products also available



https://nppnovoteh.com

6. NEEDLE ROLLER BEARINGS AND RELATED BEARINGS

6.11. Internal rings for needle and cylindrical roller bearings – IR



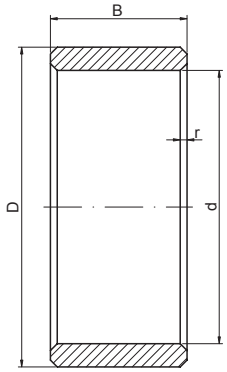

IR..

25 – 35 mm

Shaft [mm]	Bearing No.	Dimensions [mm]				Weight [kg]	Basic makes*
		d	D	B	r min.		-
25 cont.	**IR25x30x20**	25	30	20	0,3	0,0328	
	IR25x30x20,5	25	30	20,5	0,3	0,0334	
	IR25x30x23	25	30	23	0,3	0,0379	
	IR25x30x26,5	25	30	26,5	0,3	0,046	
	IR25x30x30	25	30	30	0,3	0,053	
	IR25x30x32	25	30	32	0,3	0,056	
	IR25x30x38,5	25	30	38,5	0,3	0,0645	
	IR25X30,5X12	25	30,5	12	0,3	0,022	
	IR25X31,5X15	25	31,5	15	0,3	0,033	
	IR25X31,5X18	25	31,5	18	0,3	0,039	
	IR25x32x22	25	32	22	0,3	0,0525	
	IR25X34X17	25	34	17	0,3	0,054	
	IR25x34x22	25	34	22	0,3	0,0699	
	IR25X34X24	25	34	24	0,3	0,076	
28	**IR28x32x17**	28	32	17	0,3	0,0245	
	IR28x32x20	28	32	20	0,3	0,0285	
	IR28x32x23	28	32	23	0,3	0,033	
	IR28x32x30	28	32	30	0,3	0,0435	
30	**IR30x35x12,5**	30	35	12,5	0,3	0,0233	
	IR30x35x13	30	35	13	0,3	0,025	
	IR30x35x16	30	35	16	0,3	0,034	
	IR30x35x16,5	30	35	16,5	0,3	0,0314	
	IR30x35x17	30	35	17	0,3	0,036	
	IR30x35x18	30	35	18	0,3	0,0351	
	IR30x35x20	30	35	20	0,3	0,039	
	IR30x35x20,5	30	35	20,5	0,3	0,0397	
	IR30x35x23	30	35	23	0,3	0,0447	
	IR30x35x26	30	35	26	0,3	0,0504	
	IR30x35x30	30	35	30	0,3	0,0585	
	IR30X36,5X13	30	36,5	13	0,3	0,033	
	IR30x37x18	30	37	18	0,6	0,05	
	IR30x37x22	30	37	22	0,6	0,0616	
	IR30X37,5X16	30	37,5	16	0,6	0,048	
	IR30X37,5X20	30	37,5	20	0,6	0,06	
	IR30x38x20	30	38	20	0,6	0,077	
	IR30X38,5X23,8	30	38,5	23,8	0,6	0,083	
	IR30x40x25	30	40	25	0,6	0,1047	
	IR30X40,5X19	30	40,5	19	0,6	0,084	
	IR30X40,5X27	30	40,5	27	0,6	0,119	
	IR30X42X30,2	30	42	30,2	0,6	0,155	
	IR30X45X23	30	45	23	0,6	0,154	
32	**IR32x37x20**	32	37	20	0,3	0,042	
	IR32x37x30	32	37	30	0,3	0,062	
	IR32x40x20	32	40	20	0,6	0,068	
	IR32x40x27	32	40	27	0,6	0,0931	
	IR32x40x36	32	40	36	0,6	0,124	
33	**IR33x37x13**	33	37	13	0,3	0,0219	
35	**IR35x40x12,5**	35	40	12,5	0,3	0,0272	
	IR35x40x16,5	35	40	16,5	0,3	0,0374	
	IR35x40x17	35	40	17	0,3	0,0378	
	IR35x40x20	35	40	20	0,3	0,0442	

- warehouse - order - phone

35 – 45 mm

Shaft [mm]	Bearing No.	Dimensions [mm]				Weight [kg]	Basic makes*
		d	D	B	r min.		-
35 cont.	**IR35x40x20,5**	35	40	20,5	0,3	0,0461	◴
	IR35x40x30	35	40	30	0,3	0,0671	◴
	IR35X42X14	35	42	14	0,3	0,045	◴
	IR35x42x20	35	42	20	0,6	0,0639	◴
	IR35x42x21	35	42	21	0,6	0,068	◴
	IR35x42x23	35	42	23	0,6	0,0747	◴
	IR35x42x27	35	42	27	0,6	0,0871	◴
	IR35x42x36	35	42	36	0,6	0,117	◴
	IR35x43x22	35	43	22	0,6	0,082	◴
	IR35X43,8X27	35	43,8	27	0,6	0,112	◴
	IR35X44X17	35	44	17	0,6	0,072	◴
	IR35X44X23	35	44	23	0,6	0,097	◴
	IR35x46x27	35	46	27	0,6	0,144	◴
	IR35X46,2X21	35	46,2	21	0,6	0,114	◴
	IR35X46,2X31	35	46,2	31	0,6	0,168	◴
	IR35X46,2X34,9	35	46,2	34,9	0,6	0,189	◴
	IR35X53X25	35	53	25	0,6	0,236	◴
38	**IR38x43x20**	38	43	20	0,3	0,0481	◴
	IR38x43x30	38	43	30	0,3	0,0736	◴
40	**IR40x45x16,5**	40	45	16,5	0,3	0,0414	◴
	IR40x45x17	40	45	17	0,3	0,0425	◴
	IR40x45x20	40	45	20	0,3	0,0508	◴
	IR40x45x20,5	40	45	20,5	0,3	0,0518	◴
	IR40x45x30	40	45	30	0,3	0,084	◴
	IR40X47X15	40	47	15	0,3	0,054	◴
	IR40x48x22	40	48	22	0,6	0,0916	◴
	IR40x48x23	40	48	23	0,6	0,0975	◴
	IR40x48x30	40	48	30	0,6	0,1264	◴
	IR40x48x40	40	48	40	0,6	0,17	◴
	IR40X49,3X30,16	40	49,3	30,16	0,6	0,149	◴
	IR40X49,5X18	40	49,5	18	0,6	0,091	◴
	IR40X49,5X23	40	49,5	23	0,6	0,117	◴
	IR40x50x20	40	50	20	1	0,106	◴
	IR40x50x22	40	50	22	1	0,118	◴
	IR40X50X30,2	40	50	30,2	1	0,162	◴
	IR40X52X23	40	52	23	1	0,151	◴
	IR40x52x28	40	52	28	1	0,185	◴
	IR40X52X33	40	52	33	1	0,217	◴
	IR40X53,5X36,5	40	53,5	36,5	1	0,275	◴
	IR40X58X27	40	58	27	1	0,284	◴
42	**IR42x47x20**	42	47	20	0,3	0,0528	◴
	IR42x47x30	42	47	30	0,3	0,081	◴
45	**IR45x50x20,5**	45	50	20,5	0,3	0,0588	◴
	IR45x50x25	45	50	25	0,6	0,0708	◴
	IR45x50x25,5	45	50	25,5	0,3	0,0751	◴
	IR45x50x35	45	50	35	0,6	0,101	◴
	IR45x52x22	45	52	22	0,6	0,089	◴
	IR45x52x23	45	52	23	0,6	0,0939	◴
	IR45x52x30	45	52	30	0,6	0,1219	◴
	IR45x52x40	45	52	40	0,6	0,164	◴
	IR45X52,5X16	45	52,5	16	0,6	0,07	◴
	IR45X52,5X19	45	52,5	19	0,6	0,083	◴

* Other products also available



https://nppnovoteh.com

6. NEEDLE ROLLER BEARINGS AND RELATED BEARINGS

6.11. Internal rings for needle and cylindrical roller bearings – IR



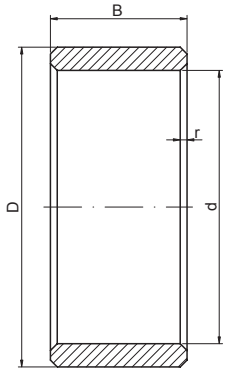

IR..

45 – 60 mm

Shaft [mm]	Bearing No.	Dimensions [mm]				Weight [kg]	Basic makes*
		d	D	B	r min.		-
45 cont.	**IR45X54,5X19**	45	54,5	19	0,6	0,107	
	IR45X54,5X23	45	54,5	23	0,6	0,13	
	IR45x55x20	45	55	20	1	0,117	
	IR45x55x22	45	55	22	1	0,129	
	IR45X55X30,2	45	55	30,2	1	0,18	
	IR45X55,5X30,16	45	55,5	30,16	1	0,19	
	IR45X58,5X25	45	58,5	25	1	0,208	
	IR45X58,5X36	45	58,5	36	1	0,3	
	IR45X58,5X39,7	45	58,5	39,7	1	0,331	
	IR45X64,5X29	45	64,5	29	1	0,369	
50	**IR50x55x20**	50	55	20	0,6	0,0625	
	IR50x55x20,5	50	55	20,5	0,6	0,0641	
	IR50x55x25	50	55	25	0,6	0,078	
	IR50x55x35	50	55	35	0,6	0,112	
	IR50X57,5X16	50	57,5	16	0,6	0,077	
	IR50x58x22	50	58	22	0,6	0,115	
	IR50x58x23	50	58	23	0,6	0,119	
	IR50x58x30	50	58	30	0,6	0,1551	
	IR50x58x40	50	58	40	0,6	0,208	
	IR50X59,5X20	50	59,5	20	0,6	0,124	
	IR50X59,5X23	50	59,5	23	0,6	0,143	
	IR50x60x20	50	60	20	1	0,128	
	IR50x60x25	50	60	25	1	0,162	
	IR50x60x28	50	60	28	1,1	0,181	
	IR50X60,4X30,16	50	60,4	30,16	1,1	0,206	
	IR50X60,4X30,2	50	60,4	30,2	1,1	0,207	
	IR50x62x30	50	62	30	1,1	0,241	
	IR50X65X27	50	65	27	1,1	0,278	
	IR50X65X40	50	65	40	1,1	0,411	
	IR50X65X44,4	50	65	44,4	1,1	0,456	
	IR50X70,8X31	50	70,8	31	1,1	0,464	
55	**IR55x60x25**	55	60	25	0,6	0,0855	
	IR55x60x35	55	60	35	0,6	0,121	
	IR55x63x25	55	63	25	1	0,141	
	IR55x63x34	55	63	34	1	0,192	
	IR55x63x45	55	63	45	1	0,256	
	IR55X64,5X18	55	64,5	18	1	0,122	
	IR55x65x28	55	65	28	1,1	0,198	
	IR55X66X21	55	66	21	1,1	0,167	
	IR55X66X25	55	66	25	1,1	0,198	
	IR55X66,5X33,3	55	66,5	33,3	1,1	0,277	
	IR55X66,9X33,34	55	66,9	33,34	1,1	0,288	
	IR55X70,5X29	55	70,5	29	1,1	0,336	
	IR55X70,5X43	55	70,5	43	1,1	0,498	
	IR55X70,5X49,2	55	70,5	49,2	1,1	0,57	
	IR55X77,2X33	55	77,2	33	1,1	0,577	
60	**IR60x68x25**	60	68	25	1	0,152	
	IR60x68x34	60	68	34	0,6	0,208	
	IR60x68x35	60	68	35	0,6	0,213	
	IR60x68x45	60	68	45	1	0,276	
	IR60X69,5X18	60	69,5	18	1	0,132	
	IR60x70x25	60	70	25	1	0,195	
	IR60x70x28	60	70	28	1,1	0,215	

- warehouse - order - phone

60 – 75 mm

Shaft [mm]	Bearing No.	Dimensions [mm]				Weight [kg]	Basic makes*
		d	D	B	r min.		-
60 cont.	**IR60X72X22**	60	72	22	1,1	0,208	◴
	IR60X72X28	60	72	28	1,1	0,264	◴
	IR60X72,3X36,5	60	72,3	36,5	1,1	0,354	◴
	IR60X73,5X36,5	60	73,5	36,5	1,1	0,392	◴
	IR60X77X31	60	77	31	1,1	0,43	◴
	IR60X77X46	60	77	46	1,1	0,638	◴
	IR60X77X54	60	77	54	1,1	0,749	◴
	IR60X83X35	60	83	35	1,1	0,686	◴
65	**IR65x72x25**	65	72	25	1	0,141	◴
	IR65x72x34	65	72	34	1	0,195	◴
	IR65x72x45	65	72	45	1	0,259	◴
	IR65x73x25	65	73	25	1	0,164	◴
	IR65x73x35	65	73	35	1	0,231	◴
	IR65X74,5X18	65	74,5	18	1	0,142	◴
	IR65X74,5X26	65	74,5	26	1	0,205	◴
	IR65x75x28	65	75	28	1,1	0,229	◴
	IR65X78,5X23	65	78,5	23	1,1	0,266	◴
	IR65X78,5X31	65	78,5	31	1,1	0,358	◴
	IR65X79,6X38,1	65	79,6	38,1	1,1	0,479	◴
	IR65X80,4X38,1	65	80,4	38,1	1,1	0,508	◴
	IR65X82,5X33	65	82,5	33	1,1	0,508	◴
	IR65X82,5X48	65	82,5	48	1,1	0,738	◴
	IR65X83,5X58,7	65	83,5	58,7	1,1	0,961	◴
	IR65X89,3X37	65	89,3	37	1,1	0,827	◴
70	**IR70X80X20**	70	80	20	1,1	0,179	◴
	IR70x80x25	70	80	25	1	0,221	◴
	IR70x80x30	70	80	30	1	0,267	◴
	IR70x80x35	70	80	35	1	0,312	◴
	IR70x80x40	70	80	40	1	0,359	◴
	IR70x80x54	70	80	54	1	0,488	◴
	IR70X83,5X24	70	83,5	24	1	0,296	◴
	IR70X83,5X31	70	83,5	31	1	0,383	◴
	IR70X84,5X39,7	70	84,5	39,7	1	0,53	◴
	IR70X84,8X39,69	70	84,8	39,69	1	0,542	◴
	IR70X89X35	70	89	35	1	0,63	◴
	IR70X89X51	70	89	51	1	0,918	◴
	IR70X90X63,5	70	90	63,5	1	1,211	◴
	IR70X100X42	70	100	42	1	1,276	◴
75	**IR75X85X20**	75	85	20	1	0,191	◴
	IR75x85x25	75	85	25	1	0,238	◴
	IR75x85x30	75	85	30	1	0,287	◴
	IR75x85x35	75	85	35	1	0,336	◴
	IR75x85x40	75	85	40	1	0,383	◴
	IR75x85x54	75	85	54	1	0,52	◴
	IR75X88,5X25	75	88,5	25	1	0,329	◴
	IR75X88,5X31	75	88,5	31	1	0,408	◴
	IR75X88,5X41,3	75	88,5	41,3	1	0,543	◴
	IR75X89X41,28	75	89	41,28	1	0,565	◴
	IR75X95X37	75	95	37	1	0,75	◴
	IR75X95X55	75	95	55	1	1,114	◴
	IR75X95,5X68,3	75	95,5	68,3	1	1,422	◴
	IR75X104,5X45	75	104,5	45	1	1,42	◴



* Other products also available

https://nppnovoteh.com

6. NEEDLE ROLLER BEARINGS AND RELATED BEARINGS

6.11. Internal rings for needle and cylindrical roller bearings – IR



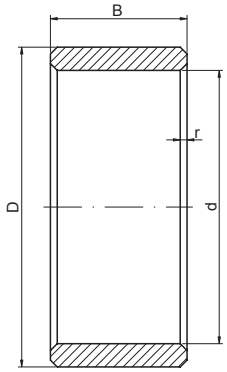

IR..

80 – 95 mm

Shaft [mm]	Bearing No.	Dimensions [mm]				Weight [kg]	Basic makes*
		d	D	B	r min.		-
80	**IR80x90x25**	80	90	25	1	0,253	
	IR80x90x30	80	90	30	1	0,304	
	IR80x90x35	80	90	35	1	0,355	
	IR80x90x40	80	90	40	1	0,407	
	IR80x90x54	80	90	54	1	0,556	
	IR80X91,5X22	80	91,5	22	1	0,259	
	IR80X95,2X44,45	80	95,2	44,45	1	0,705	
	IR80X95,3X26	80	95,3	26	1	0,416	
	IR80X95,3X33	80	95,3	33	1	0,527	
	IR80X95,3X44,4	80	95,3	44,4	1	0,71	
	IR80X101X39	80	101	39	1	0,883	
	IR80X101X58	80	101	58	1	1,314	
	IR80X103X68,3	80	103	68,3	1	1,713	
	IR80X110X48	80	110	48	1	1,63	
85	**IR85x95x26**	85	95	26	1	0,277	
	IR85x95x36	85	95	36	1	0,388	
	IR85X96,5X22	85	96,5	22	1	0,274	
	IR85x100x35	85	100	35	1,1	0,582	
	IR85x100x46	85	100	46	1,1	0,764	
	IR85x100x63	85	100	63	1,1	1,054	
	IR85X100,5X28	85	100,5	28	1,1	0,48	
	IR85X100,5X36	85	100,5	36	1,1	0,617	
	IR85X101,8X49,2	85	101,8	49,2	1,1	0,92	
	IR85X102X49,21	85	102	49,21	1,1	0,932	
	IR85X108X41	85	108	41	1,1	1,084	
	IR85X108X60	85	108	60	1,1	1,587	
	IR85X108X73	85	108	73	1,1	1,931	
	IR85X113X52	85	113	52	1,1	1,718	
90	**IR90x100x26**	90	100	26	1	0,294	
	IR90x100x30	90	100	30	1	0,34	
	IR90x100x36	90	100	36	1	0,406	
	IR90X103X24	90	103	24	1	0,359	
	IR90x105x35	90	105	35	1,1	0,61	
	IR90x105x46	90	105	46	1,1	0,805	
	IR90x105x63	90	105	63	1,1	1,11	
	IR90X107X30	90	107	30	1,1	0,599	
	IR90X107X40	90	107	40	1,1	0,798	
	IR90X107X52,4	90	107	52,4	1,1	1,046	
	IR90X107,2X52,4	90	107,2	52,4	1,1	1,059	
	IR90X113,5X43	90	113,5	43	1,1	1,225	
	IR90X113,5X64	90	113,5	64	1,1	1,824	
	IR90X115X73	90	115	73	1,1	2,229	
	IR90X123,5X54	90	123,5	54	1,1	2,301	
95	**IR95x10x63**	95	10	63	1,1	1,17	
	IR95x105x26	95	105	26	1	0,313	
	IR95x105x36	95	105	36	1	0,431	
	IR95X108X24	95	108	24	1	0,377	
	IR95x110x35	95	110	35	1,1	0,657	
	IR95x110x46	95	110	46	1,1	0,847	
	IR95x110x63	95	110	63	1,1	1,159	
	IR95X112,5X32	95	112,5	32	1,1	0,692	
	IR95X112,5X43	95	112,5	43	1,1	0,93	
	IR95X113,5X55,56	95	113,5	55,56	1,1	1,277	

- warehouse - order - phone

95 – 120 mm

Shaft [mm]	Bearing No.	Dimensions [mm]				Weight [kg]	Basic makes*
		d	D	B	r min.		-
95 cont.	**IR95X113,5X55,6**	95	113,5	55,6	1,1	1,278	◴
	IR95X121,5X45	95	121,5	45	1,1	1,538	◴
	IR95X121,5X67	95	121,5	67	1,1	2,291	◴
	IR95X121,5X77,8	95	121,5	77,8	1,1	2,66	◴
	IR95X133,5X55	95	133,5	55	1,1	2,883	◴
100	**IR100X110X20**	100	110	20	1,1	0,25	◴
	IR100x110x30	100	110	30	1,1	0,35	◴
	IR100x110x40	100	110	40	1,1	0,505	◴
	IR100X113X24	100	113	24	1,1	0,396	◴
	IR100x115x40	100	115	40	1,1	0,797	◴
	IR100X119X34	100	119	34	1,1	0,843	◴
	IR100X119X46	100	119	46	1,1	1,141	◴
	IR100X120X60,3	100	120	60,3	1,1	1,581	◴
	IR100X121X60,32	100	121	60,32	1,1	1,668	◴
	IR100X127,5X47	100	127,5	47	1,1	1,752	◴
	IR100X127,5X73	100	127,5	73	1,1	2,721	◴
	IR100X129,5X82,6	100	129,5	82,6	1,1	3,332	◴
	IR100X139X58	100	139	58	1,1	3,221	◴
105	**IR105X115X20**	105	115	20	1,1	0,262	◴
	IR105X119,5X26	105	119,5	26	1,1	0,504	◴
	IR105X125,5X36	105	125,5	36	1,1	1,014	◴
	IR105X126,5X65,1	105	126,5	65,1	1,1	1,931	◴
	IR105X126,8X65,1	105	126,8	65,1	1,1	1,96	◴
	IR105X133X49	105	133	49	1,1	1,946	◴
	IR105X135X87,3	105	135	87,3	1,1	3,745	◴
	IR105X144,5X60	105	144,5	60	1,1	3,523	◴
110	**IR110x120x30**	110	120	30	1	0,41	◴
	IR110X125X28	110	125	28	1	0,588	◴
	IR110x125x40	110	125	40	1,1	0,84	◴
	IR110x125x54	110	125	54	1,1	1,14	◴
	IR110X132,5X38	110	132,5	38	1,1	1,235	◴
	IR110X132,5X53	110	132,5	53	1,1	1,723	◴
	IR110X132,5X69,8	110	132,5	69,8	1,1	2,269	◴
	IR110X132,9X69,85	110	132,9	69,85	1,1	2,315	◴
	IR110X143X50	110	143	50	1,1	2,487	◴
	IR110X143X80	110	143	80	1,1	3,98	◴
	IR110X143X92,1	110	143	92,1	1,1	4,582	◴
	IR110X155X65	110	155	65	1,1	4,619	◴
120	**IR120x130x30**	120	130	30	1	0,44	◴
	IR120X131,5X27	120	131,5	27	1	0,465	◴
	IR120X135X28	120	135	28	1	0,638	◴
	IR120x135x45	120	135	45	1,1	1,04	◴
	IR120x135x60	120	135	60	1,1	1,37	◴
	IR120X143,5X40	120	143,5	40	1,1	1,476	◴
	IR120X143,5X58	120	143,5	58	1,1	2,14	◴
	IR120X143,5X76	120	143,5	76	1,1	2,804	◴
	IR120X145,1X76,2	120	145,1	76,2	1,1	3,021	◴
	IR120X154X55	120	154	55	1,1	3,053	◴
	IR120X154X86	120	154	86	1,1	4,774	◴
	IR120X154X106	120	154	106	1,1	5,884	◴
	IR120X170X72	120	170	72	1,1	6,221	◴



* Other products also available

6. NEEDLE ROLLER BEARINGS AND RELATED BEARINGS

6.11. Internal rings for needle and cylindrical roller bearings – IR



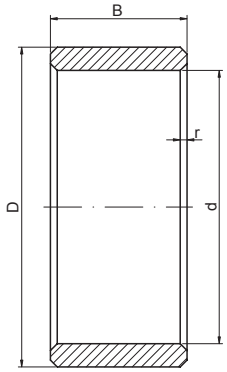

IR..

130 – 160 mm

Shaft [mm]	Bearing No.	Dimensions [mm]				Weight [kg]	Basic makes*
		d	D	B	r min.		-
130	**IR130X142X24**	130	142	24	1,1	0,467	◴
	IR130X142X30	130	142	30	1,1	0,583	◴
	IR130x145x35	130	145	35	1,1	0,86	◴
	IR130X147X42	130	147	42	1,1	1,179	◴
	IR130X148X33	130	148	33	1,1	0,984	◴
	IR130x150x50	130	150	50	1,5	1,69	◴
	IR130x150x67	130	150	67	1,1	2,25	◴
	IR130X153,5X40	130	153,5	40	1,1	1,588	◴
	IR130X153,5X64	130	153,5	64	1,1	2,541	◴
	IR130X155X79,38	130	155	79,38	1,1	3,37	◴
	IR130X156X80	130	156	80	1,1	3,545	◴
	IR130X167X58	130	167	58	1,1	3,798	◴
	IR130X167X93	130	167	93	1,1	6,09	◴
	IR130X167X112	130	167	112	1,1	7,334	◴
	IR130X185X78	130	185	78	1,1	8,052	◴
140	**IR140X152X24**	140	152	24	1,1	0,501	◴
	IR140X152X30	140	152	30	1,1	0,626	◴
	IR140x155x35	140	155	35	1,1	0,92	◴
	IR140X158X33	140	158	33	1,1	1,055	◴
	IR140x160x50	140	160	50	1,5	1,8	◴
	IR140x160x67	140	160	67	1,5	2,41	◴
	IR140X168,4X82,55	140	168,4	82,55	1,5	4,308	◴
	IR140X169X42	140	169	42	1,5	2,243	◴
	IR140X169X68	140	169	68	1,5	3,631	◴
	IR140X169X88	140	169	88	1,5	4,699	◴
	IR140X180X62	140	180	62	1,5	4,729	◴
	IR140X180X102	140	180	102	1,5	7,78	◴
	IR140X180X118	140	180	118	1,5	9	◴
	IR140X198X82	140	198	82	1,5	9,579	◴
150	**IR150x165x40**	150	165	40	1,1	1,12	◴
	IR150X169,5X35	150	169,5	35	1,1	1,299	◴
	IR150x170x60	150	170	60	1,1	2,3	◴
	IR150X171X56	150	171	56	1,1	2,249	◴
	IR150X181,5X88,9	150	181,5	88,9	1,1	5,532	◴
	IR150X182X45	150	182	45	1,1	2,849	◴
	IR150X182X73	150	182	73	1,1	4,621	◴
	IR150X182X96	150	182	96	1,1	6,077	◴
	IR150X193X65	150	193	65	1,1	5,713	◴
	IR150X193X108	150	193	108	1,1	9,492	◴
	IR150X193X128	150	193	128	1,1	11,249	◴
	IR150X213X85	150	213	85	1,1	11,583	◴
160	**IR160X175X28**	160	175	28	1,1	0,838	◴
	IR160X175X36	160	175	36	1,1	1,078	◴
	IR160x175x40	160	175	40	1,1	1,2	◴
	IR160X179X48	160	179	48	1,1	1,842	◴
	IR160X180X38	160	180	38	1,1	1,54	◴
	IR160x180x60	160	180	60	1,1	2,44	◴
	IR160X187X86	160	187	86	1,1	4,801	◴
	IR160X193X80	160	193	80	1,1	5,553	◴
	IR160X193,6X98,42	160	193,6	98,42	1,1	6,968	◴
	IR160X195X48	160	195	48	1,1	3,554	◴
	IR160X195X104	160	195	104	1,1	7,7	◴
	IR160X204X68	160	204	68	1,1	6,49	◴

- warehouse ◴ - order - phone

160 – 220 mm

Shaft [mm]	Bearing No.	Dimensions [mm]				Weight [kg]	Basic makes*
		d	D	B	r min.		-
160 cont.	**IR160X204X114**	160	204	114	1,1	10,88	◴
	IR160X208X136	160	208	136	1,1	14,315	◴
170	**IR170x185x45**	170	185	45	1,1	1,44	◴
	IR170x190x60	170	190	60	1,1	2,59	◴
	IR170X191X54	170	191	54	1,1	2,439	◴
	IR170X193X42	170	193	42	1,1	2,089	◴
	IR170X196X67	170	196	67	1,1	3,799	◴
	IR170X205X86	170	205	86	1,1	6,726	◴
	IR170X205,4X104,77	170	205,4	104,77	1,1	8,296	◴
	IR170X207X52	170	207	52	1,1	4,322	◴
	IR170X208X110	170	208	110	1,1	9,415	◴
	IR170X216X120	170	216	120	1,1	12,696	◴
	IR170X218X73	170	218	73	1,1	8,101	◴
	IR170X220X140	170	220	140	1,1	16,267	◴
180	**IR180x195x45**	180	195	45	1,1	1,51	◴
	IR180X205X46	180	205	46	1,1	2,638	◴
	IR180x205x69	180	205	69	1,1	4	◴
	IR180X207X74	180	207	74	1,1	4,607	◴
	IR180X215X86	180	215	86	1,1	7,085	◴
	IR180X217X52	180	217	52	1,1	4,551	◴
	IR180X218X112	180	218	112	1,1	10,093	◴
	IR180X227X126	180	227	126	1,1	14,362	◴
	IR180X231X75	180	231	75	1,1	9,368	◴
	IR180X232X150	180	232	150	1,1	19,149	◴
	IR180X247X95	180	247	95	1,1	16,195	◴
190	**IR190X207,5X33**	190	207,5	33	1,1	1,368	◴
	IR190x210x50	190	210	50	1,5	2,4	◴
	IR190X215X46	190	215	46	1,5	2,775	◴
	IR190x215x69	190	215	69	1,5	4,2	◴
	IR190X217X75	190	217	75	1,5	4,911	◴
	IR190X223X104	190	223	104	1,5	8,446	◴
	IR190X228X92	190	228	92	1,5	8,708	◴
	IR190X230X55	190	230	55	1,5	5,506	◴
	IR190X231X120	190	231	120	1,5	12,342	◴
	IR190X245X78	190	245	78	1,5	11,12	◴
	IR190X245X132	190	245	132	1,5	18,818	◴
	IR190X245X155	190	245	155	1,5	22,097	◴
200	**IR200X211,5X30**	200	211,5	30	1,5	0,846	◴
	IR200X218X38	200	218	38	1,5	1,704	◴
	IR200x220x50	200	220	50	1,5	2,5	◴
	IR200x225x80	200	225	80	1,5	5,1	◴
	IR200X229X51	200	229	51	1,5	3,781	◴
	IR200X232X82	200	232	82	1,5	6,755	◴
	IR200X241X98	200	241	98	1,5	10,558	◴
	IR200X243X58	200	243	58	1,5	6,583	◴
	IR200X244X128	200	244	128	1,5	14,9	◴
	IR200X253X138	200	253	138	1,5	19,743	◴
	IR200X258X80	200	258	80	1,5	12,663	◴
	IR200X260X165	200	260	165	1,5	27,136	◴
220	**IR220x240x50**	220	240	50	1,5	2,8	◴
	IR220X240X38	220	240	38	1,5	2,083	◴

* Other products also available



https://nppnovoteh.com

6. NEEDLE ROLLER BEARINGS AND RELATED BEARINGS

6.11. Internal rings for needle and cylindrical roller bearings – IR



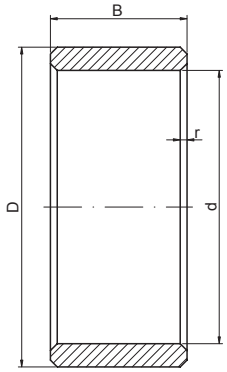

IR..

220 – 300 mm

Shaft [mm]	Bearing No.	Dimensions [mm]				Weight [kg]	Basic makes*
		d	D	B	r min.		-
220 cont.	**IR220X241,5X48**	220	241,5	48	1,5	2,838	◴
	IR220x245x80	220	245	80	1,5	5,6	◴
	IR220X250X56	220	250	56	1,5	4,705	◴
	IR220X259X108	220	259	108	1,5	12,022	◴
	IR220X261X120	220	261	120	1,5	14,101	◴
	IR220X268X65	220	268	65	1,5	9,072	◴
	IR220X270X144	220	270	144	1,5	21,022	◴
	IR220X277X145	220	277	145	1,5	24,477	◴
	IR220X282X88	220	282	88	1,5	16,32	◴
	IR220X284X180	220	284	180	1,5	34,597	◴
240	**IR240x265x60**	240	265	60	2	4,6	◴
	IR240x265x80	240	265	80	2	6	◴
	IR240X270X56	240	270	56	2	5,105	◴
	IR240X276X92	240	276	92	2	10,183	◴
	IR240X287X120	240	287	120	2	17,711	◴
	IR240X293X72	240	293	72	2	12,12	◴
	IR240X295X160	240	295	160	2	28,054	◴
	IR240X303X155	240	303	155	2	31,595	◴
	IR240X306X95	240	306	95	2	20,399	◴
	IR240X310X195	240	310	195	2	44,735	◴
260	**IR260X285X46**	260	285	46	2	3,735	◴
	IR260x285x60	260	285	60	2	5	◴
	IR260x290x100	260	290	100	2	9,9	◴
	IR260X290,5X104	260	290,5	104	2	10,405	◴
	IR260X296X65	260	296	65	2	7,753	◴
	IR260X308X144	260	308	144	2	23,394	◴
	IR260X313X130	260	313	130	2	23,525	◴
	IR260X317X80	260	317	80	2	15,678	◴
	IR260X320X174	260	320	174	2	36,081	◴
	IR260X324X165	260	324	165	2	36,748	◴
	IR260X336X206	260	336	206	2	55,601	◴
	IR260X337X102	260	337	102	2	27,939	◴
280	**IR280X298X52**	280	298	52	2	3,224	✆
	IR280X305X46	280	305	46	2	4,009	✆
	IR280x305x69	280	305	69	2	6,1	✆
	IR280x310x100	280	310	100	2	10,6	✆
	IR280X314X82	280	314	82	2	9,868	✆
	IR280X316X65	280	316	65	2	8,31	✆
	IR280X328X146	280	328	146	2	25,389	✆
	IR280X333X130	280	333	130	2	25,167	✆
	IR280X337X80	280	337	80	2	16,765	✆
	IR280X351X175	280	351	175	2	46,717	✆
	IR280X362X108	280	362	108	2	33,879	✆
300	**IR300X321X48**	300	321	48	2	3,73	✆
	IR300X322X60	300	322	60	2	4,892	✆
	IR300x330x80	300	330	80	2,1	9,2	✆
	IR300X332X56	300	332	56	2,1	6,748	✆
	IR300X340X74	300	340	74	2,1	11,288	✆
	IR300x340x118	300	340	118	2,1	18,1	✆
	IR300X341X95	300	341	95	2,1	14,877	✆
	IR300X346X118	300	346	118	2,1	20,894	✆
	IR300X352X160	300	352	160	2,1	32,324	✆

🏠 - warehouse ◴ - order ✆ - phone

300 – 400 mm

Shaft [mm]	Bearing No.	Dimensions [mm]				Weight [kg]	Basic makes*
		d	D	B	r min.		-
300 cont.	**IR300X364X85**	300	364	85	2,1	21,524	
	IR300X364X140	300	364	140	2,1	35,451	
	IR300X371X185	300	371	185	2,1	52,518	
320	**IR320X341X38**	320	341	38	2,1	3,143	
	IR320X341X48	320	341	48	2,1	3,97	
	IR320x350x80	320	350	80	2,1	9,8	
	IR320X350X56	320	350	56	2,1	6,707	
	IR320X360X74	320	360	74	2,1	11,994	
	IR320x360x118	320	360	118	2,1	19,2	
	IR320X360X95	320	360	95	2,1	15,397	
	IR320X366X121	320	366	121	2,1	22,752	
	IR320X368X176	320	368	176	2,1	34,633	
	IR320X390X92	320	390	92	2,1	27,246	
	IR320X390X150	320	390	150	2,1	44,422	
	IR320X425X112	320	425	112	2,1	52,205	
340	**IR340X361X48**	340	361	48	2,1	4,21	
	IR340X362X60	340	362	60	2,1	5,522	
	IR340X370X56	340	370	56	2,1	7,108	
	IR340x370x80	340	370	80	2,1	10,2	
	IR340X372X72	340	372	72	2,1	9,775	
	IR340x380x118	340	380	118	2,1	20,3	
	IR340X385X82	340	385	82	2,1	15,941	
	IR340X393X133	340	393	133	2,1	30,788	
	IR340X399X190	340	399	190	2,1	49,363	
	IR340X416X165	340	416	165	2,1	56,49	
360	**IR360X380X38**	360	380	38	2,1	3,351	
	IR360x390x80	360	390	80	2,1	10,9	
	IR360X392X56	360	392	56	2,1	8,03	
	IR360X393X72	360	393	72	2,1	10,661	
	IR360x400x118	360	400	118	2,1	21,5	
	IR360X405X82	360	405	82	2,1	16,821	
	IR360X405X106	360	405	106	2,1	21,744	
	IR360X405X192	360	405	192	2,1	39,385	
	IR360X413X134	360	413	134	2,1	32,712	
	IR360X437X170	360	437	170	2,1	62,166	
	IR360X465X224	360	465	224	2,1	115,623	
380	**IR380X405X75**	380	405	75	2,1	8,77	
	IR380X406X46	380	406	46	2,1	5,602	
	IR380x415x100	380	415	100	2,1	16,7	
	IR380X425X82	380	425	82	2,1	17,7	
	IR380X425X106	380	425	106	2,1	22,881	
	IR380x430x140	380	430	140	2,5	33,9	
	IR380X433X135	380	433	135	2,5	34,662	
	IR380X462X175	380	462	175	2,5	71,997	
400	**IR400X426X46**	400	426	46	2,5	5,887	
	IR400X426X75	400	426	75	2,5	9,598	
	IR400X435X65	400	435	65	2,5	11,319	
	IR400X449X118	400	449	118	2,5	29,251	
	IR400X450X90	400	450	90	2,5	22,792	
	IR400x450x140	400	450	140	2,7	35,6	
	IR400X450X148	400	450	148	2,7	37,48	

* Other products also available



https://nppnovoteh.com

6. NEEDLE ROLLER BEARINGS AND RELATED BEARINGS

6.11. Internal rings for needle and cylindrical roller bearings – IR



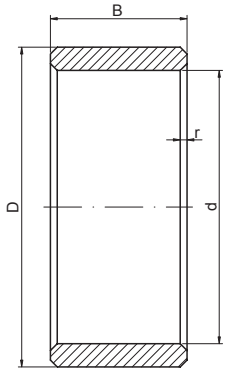

IR..

420 – 530 mm

Shaft [mm]	Bearing No.	Dimensions [mm]				Weight [kg]	Basic makes*
		d	D	B	r min.		-
420	**IR420X447X46**	420	447	46	2,7	6,416	
	IR420X448X75	420	448	75	2,7	10,862	
	IR420X456X65	420	456	65	2,7	12,214	
	IR420X458X82	420	458	82	2,7	16,302	
	IR420X469X118	420	469	118	2,7	30,629	
	IR420X470X90	420	470	90	2,7	23,865	
	IR420x470x140	420	470	140	3	37,3	
	IR420X470X150	420	470	150	3	39,774	
	IR420X485X224	420	485	224	3	78,517	
440	**IR440X464X60**	440	464	60	3	7,757	
	IR440X482X118	440	482	118	3	27,228	
	IR440X482X74	440	482	74	3	17,075	
	IR440X482X95	440	482	95	3	21,921	
	IR440X487X122	440	487	122	3	31,673	
	IR440x490x160	440	490	160	3	44,5	
	IR440X493X94	440	493	94	3	27,697	
	IR440X509X226	440	509	226	4	88,181	
460	**IR460X489X72**	460	489	72	4	11,807	
	IR460X495X95	460	495	95	4	18,921	
	IR460X500X74	460	500	74	4	16,932	
	IR460X513X128	460	513	128	4	39,332	
	IR460X516X100	460	516	100	4	32,568	
	IR460X519X163	460	519	163	4	56,101	
	IR460X529,5X240	460	529,5	240	4	98,348	
	IR460X554X165	460	554	165	4	93,713	
	IR460X554X212	460	554	212	4	120,407	
480	**IR480X511X56**	480	511	56	4	10,251	
	IR480X511X72	480	511	72	4	13,18	
	IR480X525X78	480	525	78	4	21,02	
	IR480X525X100	480	525	100	4	26,948	
	IR480X533X128	480	533	128	4	40,949	
	IR480X536X100	480	536	100	4	33,903	
	IR480X539X165	480	539	165	4	59,11	
	IR480X547X248	480	547	248	4	101,683	
500	**IR500X530X72**	500	530	72	5	13,257	
	IR500X534X56	500	534	56	5	11,731	
	IR500X534X90	500	534	90	5	18,854	
	IR500X544X128	500	544	128	5	35,036	
	IR500X546X78	500	546	78	5	22,363	
	IR500X546X100	500	546	100	5	28,671	
	IR500X553X128	500	553	128	5	42,566	
	IR500X553X167	500	553	167	5	55,536	
	IR500X556X100	500	556	100	5	35,237	
	IR500X576X264	500	576	264	5	128,642	
	IR500X603X185	500	603	185	5	125,238	
530	**IR530X560,5X72**	530	560,5	72	5	14,27	
	IR530X575X82	530	575	82	5	24,296	
	IR530X577X106	530	577	106	5	32,863	
	IR530X589X185	530	589	185	5	72,779	
	IR530X589X112	530	589	112	5	44,061	
	IR530X591X145	530	591	145	5	59,082	

- warehouse - order - phone

530 – 900 mm

Shaft [mm]	Bearing No.	Dimensions [mm]				Weight [kg]	Basic makes*
		d	D	B	r min.		-
530 cont.	**IR530X612X272**	530	612	272	5	151,775	
560	**IR560X591X56**	560	591	56	5	11,906	
	IR560X613X85	560	613	85	5	31,488	
	IR560X613X112	560	613	112	5	41,49	
	IR560X626X150	560	626	150	5	69,964	
	IR560X630X115	560	630	115	5	57,081	
	IR560X648X280	560	648	280	5	177,362	
	IR560X668X206	560	668	206	5	162,795	
600	**IR600X632X60**	600	632	60	6	14,095	
	IR600X632X78	600	632	78	6	18,323	
	IR600X649X118	600	649	118	6	43,032	
	IR600X652X90	600	652	90	6	34,914	
	IR600X661X118	600	661	118	6	54,085	
	IR600X661X155	600	661	155	6	71,044	
	IR600X661X200	600	661	200	6	91,67	
	IR600X749X155	600	749	155	6	185,644	
630	**IR630X667X69**	630	667	69	6	19,731	
	IR630X671X88	630	671	88	6	27,97	
	IR630X689X100	630	689	100	6	46,371	
	IR630X689X128	630	689	128	6	59,355	
	IR630X699X128	630	699	128	6	69,942	
	IR630X699X170	630	699	170	6	92,891	
	IR630X699X212	630	699	212	6	115,841	
	IR630X751X230	630	751	230	6	229,012	
670	**IR670X708X69**	670	708	69	6	21,529	
	IR670X728X103	670	728	103	6	49,765	
	IR670X747X136	670	747	136	6	88,42	
	IR670X747X180	670	747	180	6	117,027	
	IR670X747X230	670	747	230	7	149,534	
710	**IR710X751X74**	710	751	74	7	26,413	
	IR710X774X106	710	774	106	7	59,989	
	IR710X774X140	710	774	140	7	79,231	
	IR710X778X140	710	778	140	7	84,41	
	IR710X778X185	710	778	185	7	111,541	
750	**IR750X794X78**	750	794	78	7	31,575	
	IR750X830X150	750	830	150	7	112,977	
	IR750X830X195	750	830	195	7	146,87	
800	**IR800X846X82**	800	846	82	7	36,996	
	IR800X882X200	800	882	200	7	164,37	
	IR800X890X155	800	890	155	7	140,479	
850	**IR850X900X106**	850	900	106	7	55,267	
	IR850X917X118	850	917	118	7	83,243	
900	**IR900X949X112**	900	949	112	7	60,465	
	IR900X949X85	900	949	85	7	45,888	
	IR900X969X122	900	969	122	7	93,75	
	IR900X969X165	900	969	165	7	126,793	



* Other products also available

https://nppnovoteh.com

6. NEEDLE ROLLER BEARINGS AND RELATED BEARINGS

6.11. Internal rings for needle and cylindrical roller bearings – IR



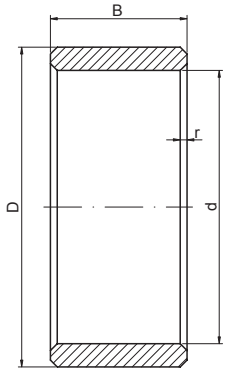

IR..

950 – 1700 mm

Shaft [mm]	Bearing No.	Dimensions [mm]				Weight [kg]	Basic makes*
		d	D	B	r min.		-
950	**IR950X1002X150**	950	1002	150	7	90,725	
	IR950X1024X175	950	1024	175	8	152,324	
1000	**IR1000X1053X100**	1000	1053	100	8	64,836	
	IR1000X1053X128	1000	1053	128	8	82,99	
	IR1000X1082X185	1000	1082	185	8	188,199	
1060	**IR1060X1146X195**	1060	1146	195	8	220,44	
	IR1060X1146X250	1060	1146	250	8	282,615	
1120	**IR1120X1182X106**	1120	1182	106	8	90,148	
	IR1120X1231X345	1120	1231	345	8	536,471	
1180	**IR1180X1242X106**	1180	1242	106	8	94,847	
	IR1180X1258X206	1180	1258	206	8	233,425	
1320	**IR1320X1395X122**	1320	1395	122	8	148,028	
	IR1320X1420X230	1320	1420	230	8	375,518	
1600	**IR1600X1694X155**	1600	1694	155	8	285,98	
1700	**IR1700X1784X160**	1700	1784	160	8	279,016	

- warehouse - order - phone * Other products also available

https://nppnovoteh.com



https://nppnovoteh.com

7. SPHERICAL ROLLER BEARINGS

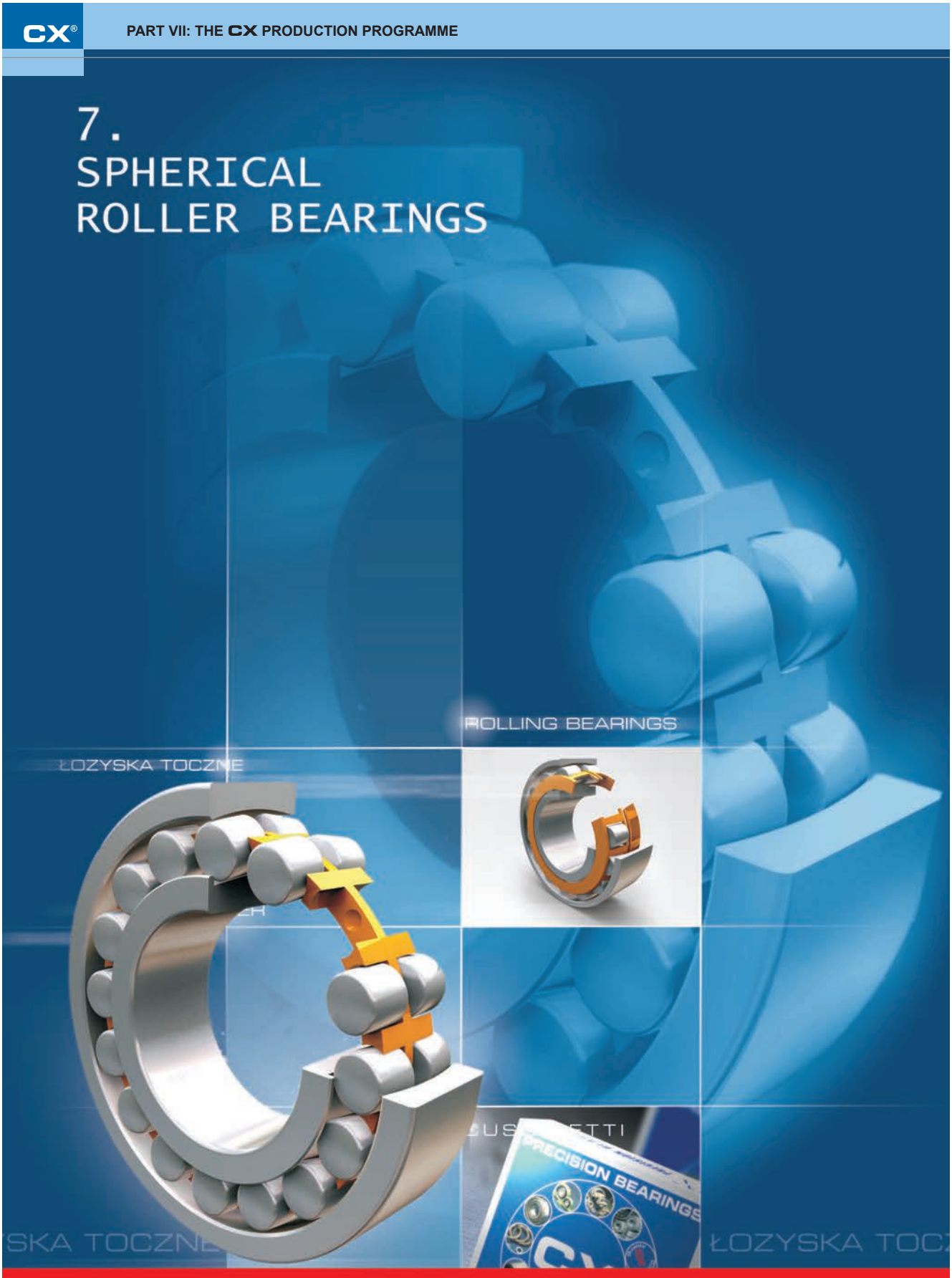

https://nppnovoteh.com

TABLES:

7. SPHERICAL ROLLER BEARINGS
7.1. Single-row and double-row spherical roller bearings
7.2. Spherical roller bearings with adapter sleeve
7.3. Spherical roller bearings with withdrawal sleeve

INTRODUCTION:

7. Single-row and double-row spherical roller bearings

7.1. Dimension series

- **202.. 203..** - single-row with cylindrical bore
- **202 K.. 203 K..** - single-row with tapered bore (1:12)
- **238.. 239.. 230.. 240.. 231.. 241.. 222.. 232.. 223.. 233..** - double-row with cylindrical bore
- **238..K 239..K 230..K 231..K 222..K 232..K 223..K 233..K** - double-row with tapered bore (1:12)
- **240..K30 241..K30** - double-row with tapered bore (1:30)

7.2. Structure

Spherical roller bearings are inseparable self-aligning bearings designed for supporting heavy and combined loads. Single-row spherical roller bearings have one row of spherical rollers, spherical track of the outer ring and one track of the inner ring, whereas double-row spherical roller bearings have two rows of spherical rollers, spherical track of the outer ring and two tracks of the inner ring. They are made with a cylindrical bore for mounting directly on the shaft or with a tapered bore of 1:12 taper (K) for mounting on adapter sleeves or withdrawal sleeves. 240- and 241-series are manufactured with a tapered bore of 1:30 taper (K30) and mounted on sleeves of the same taper. The key feature of most of the spherical roller bearings is a lubricating groove and three lubricating holes on the outer ring, most often marked with the W33 symbol.



Fig.30 Single-row spherical roller bearings

7.3. Cages

Cages stamped from steel sheet are the most popular among spherical roller bearings, especially in small-sized bearing types. In bigger bearings solid steel or brass cages are implemented. There are also custom-made spherical roller bearings with cages made of polyamide strengthened with glass fiber.

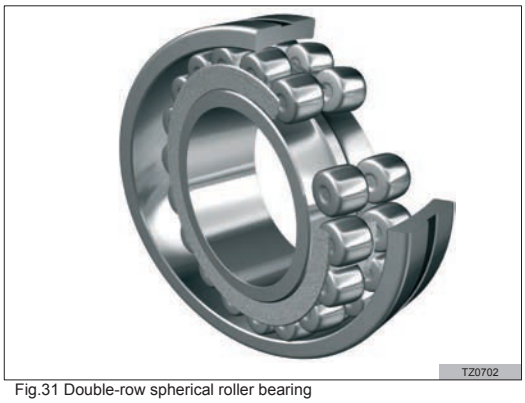

Fig.31 Double-row spherical roller bearing

7.4. Features

Spherical roller bearings represent a specific variant of self-aligning bearings, in which balls have been replaced with other rolling elements – namely with spherical rollers. They possess all features typical of self-aligning ball bearings as well as some unique features, setting them apart from other bearing types. Because of the design of their rolling elements and the fact that the contact surface of rolling elements with tracks is very large, these bearings are characterized by the high load carrying capacity, twice up to three times the capacity of self-aligning ball bearings. Angular placement of spherical rollers in relation to the bearing axis allows them to carry considerable axial loads in both directions and to support, at the same time, radial loads. This structure also guarantees resistance to errors of alignment and shaft deflections. Spherical roller bearings, when operated normally with rotating inner ring can tilt (to compensate alignment deviations) by 0,5º from the central position. At smaller load even by 2º, if the surrounding construction allows that. When the outer ring rotates the angular displacement capability is smaller. Standard spherical roller bearings are heat-stabilized to the temperature above 120ºC. For smaller bearings the limiting temperature is usually at 150ºC and for bigger usually at 200ºC. Spherical roller bearings with a solid polyamide cage are adapted for continuous operation in temperatures not higher than 100ºC.

https://nppnovoteh.com

7.5. Application

Spherical roller bearings are applied in all branches of industry and transport thanks to their features. They often assume very responsible duties and are operated under extreme conditions. They successfully substitute for other bearings, which are often not able to support at the same time heavy radial loads and axial loads in both directions. Despite the fact that they are neither cheap nor simple in construction, they often seem to be indispensable.

7.6. Mounting on sleeves

Spherical roller bearings as self-aligning ball bearings can be mounted on the shaft in two ways: directly on the shaft or with the help of the adapter sleeve (H) or withdrawal sleeve (AH). Generally the sleeves help mount or dismount bearings and in many cases also make the bearing mounting construction easier. Requirements regarding accuracy of the shaft making are lower in case of assembly with the help of sleeves than in cases of direct assembly on the shaft. Spherical roller bearings must have a tapered bore – K-mark behind the symbol – to be mounted with the help of a sleeve. Normally, taper of the tapered bore is 1:12 and only 240- and 241-series have taper of 1:30 – K30 sign. Adapter sleeves are more popular because they allow to mount bearings both on the levelled shaft and on the outstanding one. Their mounting and dismounting is easier than in case of withdrawal sleeves and moreover they do not require any additional fixing on the shaft. But security of sleeve units seems to be the most important factor. In case of bearing damage most often the shaft itself also gets damaged, and in the sleeve systems the shaft is definitely better protected.

7.7. Comparing features of self-aligning ball bearings and spherical roller bearings

Parameters/ bearing type	2210	22210	2310	22310
Basic load ratings -dynamic C [kN]	33,8	84,5	63,7	176,0
Rotational speed (grease) [r/min]	6300	5000	5300	3400

The table shown above serves as a comparison of capabilities of both types of self-aligning bearings. Whereas rotational parameters are similar, the load capacity of spherical roller bearings is nearly three times the load capacity of self-aligning ball bearings. Structure of rolling elements and angular position of spherical rollers in relation to the shaft axis allow to carry considerable axial loads in both directions. To be sure, self-aligning ball bearings also carry axial load in both directions, but definitely smaller ones. In this connection it is worthwhile to implement appropriately dimensioned spherical roller bearing if we are not sure, if the planned self-aligning ball bearing is capable of meeting all construction requirements.

https://nppnovoteh.com

https://nppnovoteh.com

7. SPHERICAL ROLLER BEARINGS

7.1. Single-row and double-row spherical roller bearings



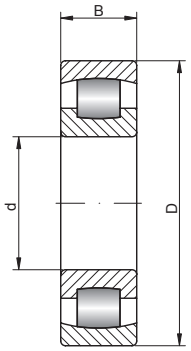

202.. 203..

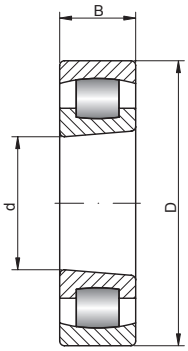

202.. K 203.. K

20 – 50 mm

d [mm]	Bearing No.	Series		Sleeve No.		Dimensions [mm]			Weight [kg]	Basic load ratings [kN]	
		SD	SB	H..	AH..	d	D	B		dyn. C	stat. C_0
20	**20204 C**	2	0	-	-	20	47	14	0,114	20,4	19,3
	20304 C	3	0	-	-	20	52	15	0,152	27	24,5
	21304 C	3	0	-	-	20	52	15	0,16	34,4	33,6
25	**20205 C**	2	0	-	-	25	52	15	0,134	24	25
	20205 KC	2	0	H205	-	25	52	15	0,145	24	25
	22205 CW33	2	2	-	-	25	52	18	0,18	43,1	44
	22205 KCW33	2	2	H305	-	25	52	18	0,163	43,1	44
	20305 C	3	0	-	-	25	62	17	0,243	36	34,5
	21305 CW33	3	0	-	-	25	62	17	0,25	41,4	41,5
30	**20206 C**	2	0	-	-	30	62	16	0,207	27,5	28,5
	20206 KC	2	0	H206	-	30	62	16	0,228	27,5	28,5
	22206 CW33	2	2	-	-	30	62	20	0,28	48,9	52
	22206 KCW33	2	2	H306	-	30	62	20	0,26	48,9	52
	20306 C	3	0	-	-	30	72	19	0,37	49	49
	21306 CW33	3	0	-	-	30	72	19	0,38	55,2	61
	21306 KCW33	3	0	H306	-	30	72	19	0,38	55,2	61
35	**20207 C**	2	0	-	-	35	72	17	0,335	40,5	43
	20207 KC	2	0	H207	-	35	72	17	0,301	40,5	43
	22207 CW33	2	2	-	-	35	72	23	0,43	67,3	73,5
	22207 KCW33	2	2	H307	-	35	72	23	0,405	67,3	73,5
	20307 C	3	0	-	-	35	80	21	0,493	58,5	61
	21307 CW33	3	0	-	-	35	80	21	0,51	65,6	72
	21307 KCW33	3	0	H307	-	35	80	21	0,502	65,6	72
	22307 CW33	3	2	-	-	35	80	31	0,75	105	107
	22307 KCW33	3	2	H2307	-	35	80	31	0,733	105	107
40	**20208 C**	2	0	-	-	40	80	18	0,386	49	53
	20208 KC	2	0	H208	-	40	80	18	0,389	49	53
	22208 CW33	2	2	-	-	40	80	23	0,52	73,6	81,5
	22208 KCW33	2	2	H308	AH308	40	80	23	0,487	73,6	81,5
	20308 C	3	0	-	-	40	90	23	0,671	76,5	81,5
	21308 CW33	3	0	-	-	40	90	23	0,71	82,8	98
	21308 KCW33	3	0	H308	AH308	40	90	23	0,706	82,8	98
	22308 CW33	3	2	-	-	40	90	33	1	115	122
	22308 KCW33	3	2	H2308	AH2308	40	90	33	0,984	115	122
45	**20209 C**	2	0	-	-	45	85	19	0,441	52	57
	20209 KC	2	0	H209	-	45	85	19	0,483	52	57
	22209 CW33	2	2	-	-	45	85	23	0,56	77,1	88
	22209 KCW33	2	2	H309	AH309	45	85	23	0,57	77,1	88
	20309 C	3	0	-	-	45	100	25	0,914	86,5	95
	21309 CW33	3	0	-	-	45	100	25	0,95	101	114
	21309 KCW33	3	0	H309	AH309	45	100	25	0,947	101	114
	22309 CW33	3	2	-	-	45	100	36	1,35	138	160
	22309 KCW33	3	2	H2309	AH2309	45	100	36	1,36	138	160
50	**20210 C**	2	0	-	-	50	90	20	0,499	58,5	68
	20210 KC	2	0	H210	-	50	90	20	0,49	58,5	68
	22210 CW33	2	2	-	-	50	90	23	0,6	84,5	100
	22210 KCW33	2	2	H310	AH310	50	90	23	0,582	84,5	100
	20310 C	3	0	-	-	50	110	27	1,17	108	118
	21310 CW33	3	0	-	-	50	110	27	1,2	120	140
	21310 KCW33	3	0	H310	AH310	50	110	27	1,21	120	140
	22310 CW33	3	2	-	-	50	110	40	1,85	176	200

- warehouse - order - phone

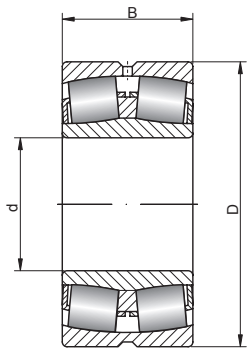

238.. 239.. 230.. 240..
231.. 241.. 222.. 232..
223.. 233..

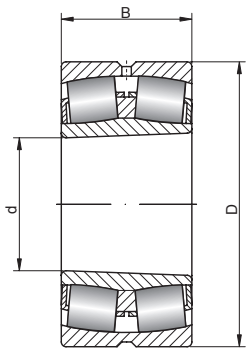

K, K30
1:30 taper
240.. K30 241.. K30

Limiting speed [rpm]		Basic makes*					Bearing No.
grease	oil	-	M	TV	C3	C4	
5500	7250	●	●	●	●	●	**20204 C**
5000	6750	●	●	●	●	●	**20304 C**
7000	9500	●	●	●	●	●	**21304 C**
5000	6500	●	●	●	●	●	**20205 C**
5000	6500	●	●	●	●	●	**20205 KC**
8500	11000	■	◴	●	◴	◴	**22205 CW33**
8500	11000	■	◴	●	◴	◴	**22205 KCW33**
4500	5750	●	●	●	●	●	**20305 C**
6700	8500	■	●	●	◴	◴	**21305 CW33**
4000	5500	●	●	●	●	●	**20206 C**
4000	5500	●	●	●	●	●	**20206 KC**
7500	9500	■	◴	●	◴	◴	**22206 CW33**
7500	9500	■	◴	●	◴	◴	**22206 KCW33**
3750	4750	●	●	●	●	●	**20306 C**
6000	7500	■	●	●	◴	◴	**21306 CW33**
6000	7500	■	●	●	◴	◴	**21306 KCW33**
3500	4750	●	●	●	●	●	**20207 C**
3500	4750	●	●	●	●	●	**20207 KC**
6300	8000	■	◴	●	◴	◴	**22207 CW33**
6300	8000	■	◴	●	◴	◴	**22207 KCW33**
3250	4500	●	●	●	●	●	**20307 C**
5300	6700	■	●	●	◴	◴	**21307 CW33**
5300	6700	■	●	●	◴	◴	**21307 KCW33**
5100	6700	■	●	●	◴	◴	**22307 CW33**
5100	6700	■	●	●	◴	◴	**22307 KCW33**
3250	4250	●	●	●	●	●	**20208 C**
3250	4250	●	●	●	●	●	**20208 KC**
6000	7500	■	◴	●	◴	◴	**22208 CW33**
6000	7500	■	◴	●	◴	◴	**22208 KCW33**
3000	4000	●	●	●	●	●	**20308 C**
4500	5600	■	●	●	◴	◴	**21308 CW33**
4500	5600	■	●	●	◴	◴	**21308 KCW33**
4500	5600	■	●	●	◴	◴	**22308 CW33**
4500	5600	■	●	●	◴	◴	**22308 KCW33**
3000	4000	●	●	●	●	●	**20209 C**
3000	4000	●	●	●	●	●	**20209 KC**
5300	6700	■	◴	●	◴	◴	**22209 CW33**
5300	6700	■	◴	●	◴	◴	**22209 KCW33**
2750	3500	●	●	●	●	●	**20309 C**
4300	5300	■	●	●	◴	◴	**21309 CW33**
4300	5300	■	●	●	◴	◴	**21309 KCW33**
3800	4800	■	●	●	◴	◴	**22309 CW33**
3800	4800	■	●	●	◴	◴	**22309 KCW33**
2750	3500	●	●	●	●	●	**20210 C**
2750	3500	●	●	●	●	●	**20210 KC**
5000	6300	■	◴	●	◴	◴	**22210 CW33**
5000	6300	■	◴	●	◴	◴	**22210 KCW33**
2500	3250	●	●	●	●	●	**20310 C**
3600	4800	■	●	●	◴	◴	**21310 CW33**
3600	4800	■	●	●	◴	◴	**21310 KCW33**
3400	4300	■	●	●	◴	◴	**22310 CW33**

* Other products also available

https://nppnovoteh.com

7. SPHERICAL ROLLER BEARINGS

7.1. Single-row and double-row spherical roller bearings



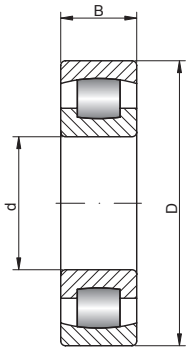

202.. 203..

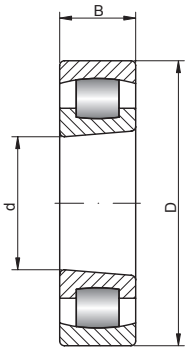

202.. K 203.. K

50 – 80 mm

d [mm]	Bearing No.	Series		Sleeve No.		Dimensions [mm]			Weight [kg]	Basic load ratings [kN]	
		SD	SB	H..	AH..	d	D	B		dyn. C	stat. C_0
50 cont.	**22310 KCW33**	3	2	H2310	AH310	50	110	40	1,7	176	200
55	**20211 C**	2	0	-	-	55	100	21	0,653	73,5	85
	20211 KC	2	0	H211	-	55	100	21	0,78	73,5	85
	22211 CW33	2	2	-	-	55	100	25	0,82	99,5	118
	22211 KCW33	2	2	H311	AH311	55	100	25	0,8	99,5	118
	20311 C	3	0	-	-	55	120	29	1,53	120	137
	20311 KC	3	0	H311	-	55	120	29	1,64	120	137
	21311 CW33	3	0	-	-	55	120	29	1,6	138	163
	21311 KCW33	3	0	H311	AH311	55	120	29	1,55	138	163
	22311 CW33	3	2	-	-	55	120	43	2,35	199	232
	22311 KCW33	3	2	H2311	AH311	55	120	43	2,02	199	232
60	**20212 C**	2	0	-	-	60	110	22	0,836	85	100
	20212 KC	2	0	H212	-	60	110	22	0,93	85	100
	22212 CW33	2	2	-	-	60	110	28	1,1	122	146
	22212 KCW33	2	2	H312	AH312	60	110	31	1	122	146
	20312 C	3	0	-	-	60	130	31	1,92	146	170
	20312 KC	3	0	H312	-	60	130	31	2	146	170
	21312 CW33	3	0	-	-	60	130	31	1,95	161	200
	21312 KCW33	3	0	H312	AH312	60	130	31	1,93	161	200
	22312 CW33	3	2	-	-	60	130	46	2,9	235	280
	22312 KCW33	3	2	H2312	AH2312	60	130	46	2,8	235	280
65	**20213 C**	2	0	-	-	65	120	23	1,08	95	116
	20213 KC	2	0	H213	-	65	120	23	1,19	95	116
	22213 CW33	2	2	-	-	65	120	31	1,45	176	216
	22213 KCW33	2	2	H313	AH313	65	120	31	1,27	176	216
	20313 C	3	0	-	-	65	140	33	2,18	170	196
	20313 KC	3	0	H313	-	65	140	33	2,53	170	196
	21313 CW33	3	0	-	-	65	140	33	2,45	184	240
	21313 KCW33	3	0	H313	AH313	65	140	33	2,42	184	240
	22313 CW33	3	2	-	-	65	140	48	3,55	253	300
	22313 KCW33	3	2	H2313	AH2313	65	140	48	3,57	253	300
70	**20214 C**	2	0	-	-	70	125	24	1,17	106	134
	22214 CW33	2	2	-	-	70	125	31	1,55	148	186
	22214 KCW33	2	2	H314	AH314	70	125	31	1,46	148	186
	20314 C	3	0	-	-	70	150	35	3,15	183	216
	21314 CW33	3	0	-	-	70	150	35	3	207	260
	21314 KCW33	3	0	H314	AH314	70	150	35	2,95	207	260
	22314 CW33	3	2	-	-	70	150	51	4,3	311	380
	22314 KCW33	3	2	H2314	AH2314	70	150	51	4,25	311	380
75	**20215 C**	2	0	-	-	75	130	25	1,28	112	143
	20215 KC	2	0	H215	-	75	130	25	1,4	112	143
	22215 CW33	2	2	-	-	75	130	31	1,65	158	208
	22215 KCW33	2	2	H315	AH315	75	130	31	1,65	158	208
	20315 C	3	0	-	-	75	160	37	3,76	216	255
	21315 CW33	3	0	-	-	75	160	37	3,55	235	300
	21315 KCW33	3	0	H315	AH315	75	160	37	3,55	235	300
	22315 CW33	3	2	-	-	75	160	55	5,25	345	430
	22315 KCW33	3	2	H2315	AH2315	75	160	55	5,01	345	430
80	**20216 C**	2	0	-	-	80	140	26	1,58	125	163
	20216 KC	2	0	H216	-	80	140	26	1,72	125	163

- warehouse - order - phone

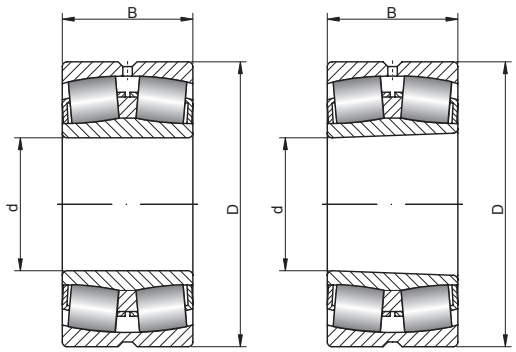

238.. 239.. 230.. 240..
231.. 241.. 222.. 232..
223.. 233..

K, K30
1:30 taper
240.. K30 241.. K30

Limiting speed [rpm]		Basic makes*					Bearing No.
grease	oil	-	M	TV	C3	C4	
3400	4300	●	○	○	◴	◴	**22310 KCW33**
2500	3250	○	○	○	○	○	**20211 C**
2500	3250	○	○	○	○	○	**20211 KC**
4500	5600	●	◴	○	◴	◴	**22211 CW33**
4500	5600	●	◴	○	◴	◴	**22211 KCW33**
2250	3000	○	○	○	○	○	**20311 C**
2250	3000	○	○	○	○	○	**20311 KC**
3400	4300	●	○	○	◴	◴	**21311 CW33**
3400	4300	●	○	○	◴	◴	**21311 KCW33**
3200	4000	●	○	○	◴	◴	**22311 CW33**
3200	4000	●	○	○	◴	◴	**22311 KCW33**
2500	3250	○	○	○	○	○	**20212 C**
2500	3250	○	○	○	○	○	**20212 KC**
4000	5000	●	◴	○	◴	◴	**22212 CW33**
4000	5000	●	◴	○	◴	◴	**22212 KCW33**
2000	2750	○	○	○	○	○	**20312 C**
2000	2750	○	○	○	○	○	**20312 KC**
3000	3800	●	◴	○	◴	◴	**21312 CW33**
3000	3800	●	◴	○	◴	◴	**21312 KCW33**
3000	3800	●	◴	○	◴	◴	**22312 CW33**
3000	3800	●	◴	○	◴	◴	**22312 KCW33**
2250	3000	○	○	○	○	○	**20213 C**
2250	3000	○	○	○	○	○	**20213 KC**
3800	4800	●	◴	○	◴	◴	**22213 CW33**
3800	4800	●	◴	○	◴	◴	**22213 KCW33**
2000	2750	○	○	○	○	○	**20313 C**
2000	2750	○	○	○	○	○	**20313 KC**
2800	3600	●	◴	○	◴	◴	**21313 CW33**
2800	3600	●	◴	○	◴	◴	**21313 KCW33**
2600	3400	●	◴	○	◴	◴	**22313 CW33**
2600	3400	●	◴	○	◴	◴	**22313 KCW33**
2000	2750	○	○	○	○	○	**20214 C**
3600	4500	●	◴	○	◴	◴	**22214 CW33**
3600	4500	●	◴	○	◴	◴	**22214 KCW33**
2000	2500	○	○	○	○	○	**20314 C**
2600	3400	●	◴	○	◴	◴	**21314 CW33**
2600	3400	●	◴	○	◴	◴	**21314 KCW33**
2400	3200	●	◴	○	◴	◴	**22314 CW33**
2400	3200	●	◴	○	◴	◴	**22314 KCW33**
2000	2750	○	○	○	○	○	**20215 C**
2000	2750	○	○	○	○	○	**20215 KC**
3400	4300	●	◴	○	◴	◴	**22215 CW33**
3400	4300	●	◴	○	◴	◴	**22215 KCW33**
1750	2250	○	○	○	○	○	**20315 C**
2400	3200	●	◴	○	◴	◴	**21315 CW33**
2400	3200	●	◴	○	◴	◴	**21315 KCW33**
2200	3000	●	◴	○	◴	◴	**22315 CW33**
2200	3000	●	◴	○	◴	◴	**22315 KCW33**
2000	2500	○	○	○	○	○	**20216 C**
2000	2500	○	○	○	○	○	**20216 KC**

* Other products also available



https://nppnovoteh.com

7. SPHERICAL ROLLER BEARINGS

7.1. Single-row and double-row spherical roller bearings



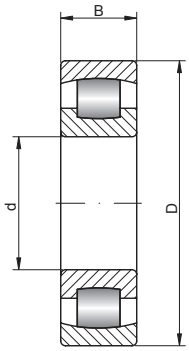

202.. 203..

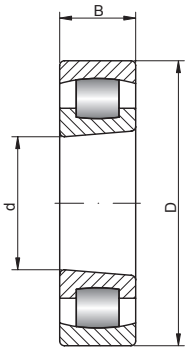

202.. K 203.. K

80 – 100 mm

d [mm]	Bearing No.	Series		Sleeve No.		Dimensions [mm]			Weight [kg]	Basic load ratings [kN]	
		SD	SB	H..	AH..	d	D	B		dyn. C	stat. C_0
80 cont.	**22216 CW33**	2	2	-	-	80	140	33	2,1	207	270
	22216 KCW33	2	2	H316	AH316	80	140	33	1,97	176	228
	20316 C	3	0	-	-	80	170	39	4,58	245	285
	21316 CW33	3	0	-	-	80	170	39	4,2	258	335
	21316 KCW33	3	0	H316	AH316	80	170	39	4,23	258	335
	22316 CW33	3	2	-	-	80	170	58	6,2	374	455
	22316 KCW33	3	2	H2316	AH2316	80	170	58	5,95	374	455
85	**20217 C**	2	0	-	-	85	150	28	2,22	156	200
	20217 KC	2	0	H217	-	85	150	28	2,14	156	200
	22217 CW33	2	2	-	-	85	150	36	2,55	210	270
	22217 KCW33	2	2	H317	AH317	85	150	36	2,49	210	270
	20317 C	3	0	-	-	85	180	41	5,25	270	320
	21317 CW33	3	0	-	-	85	180	41	5	293	375
	21317 KCW33	3	0	H317	AH317	85	180	41	4,93	293	375
	22317 CW33	3	2	-	-	85	180	60	7,25	420	520
	22317 KCW33	3	2	H2317	AH2317	85	180	60	6,84	420	520
90	**20218 C**	2	0	-	-	90	160	30	2,72	173	220
	20218 KC	2	0	H218	-	90	160	30	2,63	173	220
	22218 CW33	2	2	-	-	90	160	40	3,4	253	340
	22218 KCW33	2	2	H318	AH318	90	160	40	3,2	253	340
	23218 CW33	2	3	-	-	90	160	52.4	4,6	311	440
	23218 KCW33	2	3	H2318	AH3218	90	160	52.4	4,2	311	440
	20318 C	3	0	-	-	90	190	43	6,25	300	360
	20318 KC	3	0	H318	-	90	190	43	6,03	300	360
	21318 CW33	3	0	-	-	90	190	43	5,8	322	425
	21318 KCW33	3	0	H318	AH318	90	190	43	5,74	322	425
	22318 CW33	3	2	-	-	90	190	64	8,6	477	610
	22318 KCW33	3	2	H2318	AH2318	90	190	64	8,08	477	610
95	**20219 C**	2	0	-	-	95	170	32	3,19	208	265
	22219 CW33	2	2	-	-	95	170	43	4	282	375
	22219 KCW33	2	2	H319	AH319	95	170	43	3,89	282	375
	20319 C	3	0	-	-	95	200	45	7,29	335	400
	21319 CW33	3	0	-	-	95	200	45	7,15	351	480
	21319 KCW33	3	0	H319	AH319	95	200	45	6,63	351	480
	22319 CW33	3	2	-	-	95	200	67	10	518	670
	22319 KCW33	3	2	H2319	AH2319	95	200	67	9,21	518	670
100	**23120 CW33**	1	3	-	-	100	165	52	4,4	322	490
	23120 KCW33	1	3	H3120	AH3120	100	165	52	4,2	322	490
	20220 C	2	0	-	-	100	180	34	3,96	224	290
	20220 KC	2	0	H220	-	100	180	34	3,81	224	290
	22220 CW33	2	2	-	-	100	180	46	4,85	311	415
	22220 KCW33	2	2	H320	AH320	100	180	46	4,72	311	415
	23220 CW33	2	3	-	-	100	180	60.3	6,7	414	600
	23220 KCW33	2	3	H2320	AH3220	100	180	60.3	6,2	414	600
	20320 C	3	0	-	-	100	215	47	8,69	365	440
	20320 KC	3	0	H320	-	100	215	47	8,46	365	440
	21320 CW33	3	0	-	-	100	215	47	8,8	385	530
	21320 KCW33	3	0	H320	AH320	100	215	47	8,19	385	530
	22320 CW33	3	2	-	-	100	215	73	13	610	800
	22320 KCW33	3	2	H2320	AH2320	100	215	73	11,7	610	800
	23320 CW33	3	3	-	-	100	215	82,6	15,3	680	900

- warehouse - order - phone

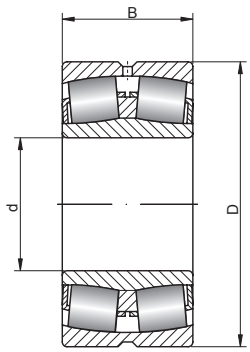

238.. 239.. 230.. 240..
231.. 241.. 222.. 232..
223.. 233..

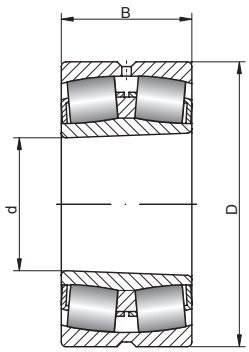

K, K30
1:30 taper
240.. K30 241.. K30

Limiting speed [rpm]		Basic makes*					Bearing No.
grease	oil	-	M	TV	C3	C4	
3200	4000	●	◴	↷	◴	◴	**22216 CW33**
3200	4000	●	◴	↷	◴	◴	**22216 KCW33**
1500	2000	↷	↷	↷	↷	↷	**20316 C**
2200	3000	●	◴	↷	◴	◴	**21316 CW33**
2200	3000	●	◴	↷	◴	◴	**21316 KCW33**
2000	2800	●	◴	↷	◴	◴	**22316 CW33**
2000	2800	●	◴	↷	◴	◴	**22316 KCW33**
1750	2500	↷	↷	↷	↷	↷	**20217 C**
1750	2500	↷	↷	↷	↷	↷	**20217 KC**
3000	3800	●	◴	↷	◴	◴	**22217 CW33**
3000	3800	●	◴	↷	◴	◴	**22217 KCW33**
1500	2000	↷	↷	↷	↷	↷	**20317 C**
2000	2800	●	◴	↷	◴	◴	**21317 CW33**
2000	2800	●	◴	↷	◴	◴	**21317 KCW33**
1900	2600	●	◴	↷	◴	◴	**22317 CW33**
1900	2600	●	◴	↷	◴	◴	**22317 KCW33**
1500	2000	↷	↷	↷	↷	↷	**20218 C**
1500	2000	↷	↷	↷	↷	↷	**20218 KC**
2600	3400	●	◴	↷	◴	◴	**22218 CW33**
2600	3400	●	◴	↷	◴	◴	**22218 KCW33**
1900	2600	●	◴	↷	◴	◴	**23218 CW33**
1900	2600	●	◴	↷	◴	◴	**23218 KCW33**
1500	2000	↷	↷	↷	↷	↷	**20318 C**
1500	2000	↷	↷	↷	↷	↷	**20318 KC**
1900	2600	●	◴	↷	◴	◴	**21318 CW33**
1900	2600	●	◴	↷	◴	◴	**21318 KCW33**
1800	2400	●	◴	↷	◴	◴	**22318 CW33**
1800	2400	●	◴	↷	◴	◴	**22318 KCW33**
1500	2000	↷	↷	↷	↷	↷	**20219 C**
2400	3200	●	◴	↷	◴	◴	**22219 CW33**
2400	3200	●	◴	↷	◴	◴	**22219 KCW33**
1500	1750	↷	↷	↷	↷	↷	**20319 C**
1800	2400	●	◴	↷	◴	◴	**21319 CW33**
1800	2400	●	◴	↷	◴	◴	**21319 KCW33**
1800	2400	●	◴	↷	◴	◴	**22319 CW33**
1800	2400	●	◴	↷	◴	◴	**22319 KCW33**
2000	2800	●	◴	↷	◴	◴	**23120 CW33**
2000	2800	●	◴	↷	◴	◴	**23120 KCW33**
1500	2000	↷	↷	↷	↷	↷	**20220 C**
1500	2000	↷	↷	↷	↷	↷	**20220 KC**
2200	3000	●	◴	↷	◴	◴	**22220 CW33**
2200	3000	●	◴	↷	◴	◴	**22220 KCW33**
1700	2200	●	◴	↷	◴	◴	**23220 CW33**
1700	2200	●	◴	↷	◴	◴	**23220 KCW33**
1250	1750	↷	↷	↷	↷	↷	**20320 C**
1250	1750	↷	↷	↷	↷	↷	**20320 KC**
1700	2200	●	◴	↷	◴	◴	**21320 CW33**
1700	2200	●	◴	↷	◴	◴	**21320 KCW33**
1700	2200	●	◴	↷	◴	◴	**22320 CW33**
1700	2200	●	◴	↷	◴	◴	**22320 KCW33**
1650	2150	↷	↷	↷	↷	↷	**23320 CW33**

* Other products also available

https://nppnovoteh.com

7. SPHERICAL ROLLER BEARINGS

7.1. Single-row and double-row spherical roller bearings



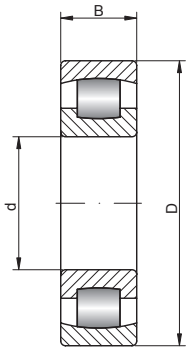

202.. 203..

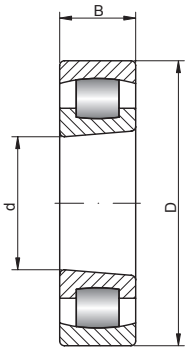

202.. K 203.. K

105 – 130 mm

d [mm]	Bearing No.	Series		Sleeve No.		Dimensions [mm]			Weight [kg]	Basic load ratings [kN]	
		SD	SB	H..	AH..	d	D	B		dyn. C	stat. C_0
105	**20221 C**	2	0	-	-	105	190	36	4,74	245	315
110	**23022 CW33**	0	3	-	-	110	170	45	3,75	267	440
	23022 KCW33	0	3	H3022	-	110	170	45	3,87	286	478
	23122 CW33	1	3	-	-	110	180	56	5,55	374	585
	23122 KCW33	1	3	H3122	AH3122	110	180	56	5,13	374	585
	24122 CW33	1	4	-	-	110	180	69	6,85	460	750
	24122 K30CW33	1	4	-	AH24122	110	180	69	6,85	460	750
	20222 C	2	0	-	-	110	200	38	5,53	285	375
	20222 KC	2	0	H222	-	110	200	38	5,34	285	375
	22222 CW33	2	2	-	-	110	200	53	7	408	560
	22222 KCW33	2	2	H322	AH3122	110	200	53	7,1	408	560
	23222 CW33	2	3	-	-	110	200	70	9,7	518	765
	23222 KCW33	2	3	H2322	AH3222	110	200	70	9,1	518	765
	20322 C	3	0	-	-	110	240	50	11,6	430	520
	21322 CW33	3	0	-	-	110	240	50	12	460	630
	21322 KCW33	3	0	H322	AH322	110	240	50	11,1	460	630
	22322 CW33	3	2	-	-	110	240	80	17,5	725	965
	22322 KCW33	3	2	H2322	AH2322	110	240	80	17,4	725	965
	23322 CW33	3	3	-	-	110	240	92	21,1	830	1080
120	**23024 CW33**	0	3	-	-	120	180	46	4,2	305	510
	23024 KCW33	0	3	H3024	AH3024	120	180	46	4,22	305	510
	24024 CW33	0	4	-	-	120	180	60	5,4	374	670
	24024 K30CW33	0	4	-	AH24024	120	180	60	4,96	397	709
	23124 CW33	1	3	-	-	120	200	62	7,8	449	695
	23124 KCW33	1	3	H3124	AH3124	120	200	62	7,3	449	695
	24124 CW33	1	4	-	-	120	200	80	10	575	950
	24124 K30CW33	1	4	-	AH24124	120	200	80	10	575	950
	20224 C	2	0	-	-	120	215	40	6,6	305	415
	20224 KC	2	0	H3024	-	120	215	40	6,41	305	415
	22224 CW33	2	2	-	-	120	215	58	8,7	466	670
	22224 KCW33	2	2	H3124	AH3124	120	215	58	8,72	466	670
	23224 CW33	2	3	-	-	120	215	76	12	610	930
	23224 KCW33	2	3	H2324	AH3224	120	215	76	11	610	930
	20324 C	3	0	-	-	120	260	55	15,2	490	630
	22324 CW33	3	2	-	-	120	260	86	22	845	1120
	22324 KCW33	3	2	H2324	AH2324	120	260	86	21	845	1120
	23324 CW33	3	3	-	-	120	260	106	28,9	1020	1430
130	**23026 CW33**	0	3	-	-	130	200	52	6,1	374	610
	23026 KCW33	0	3	H3026	AH3026	130	200	52	5,6	374	610
	24026 CW33	0	4	-	-	130	200	69	7,95	374	670
	24026 K30CW33	0	4	-	AH24026	130	200	69	7,33	512	914
	23126 CW33	1	3	-	-	130	210	64	8,55	489	780
	23126 KCW33	1	3	H3126	AH3126	130	210	64	8,1	489	780
	24126 CW33	1	4	-	-	130	210	80	11	587	1000
	24126 K30CW33	1	4	-	AH24126	130	210	80	11	587	1000
	20226 C	2	0	-	-	130	230	40	7,31	335	450
	20226 KC	2	0	H3026	-	130	230	40	7,19	335	450
	22226 CW33	2	2	-	-	130	230	64	11	546	800
	22226 KCW33	2	2	H3126	AH3126	130	230	64	10,4	546	800
	23226 CW33	2	3	-	-	130	230	80	14	690	1060
	23226 KCW33	2	3	H2326	AH3226	130	230	80	13	690	1060
	20326 C	3	0	-	-	130	280	58	18,4	550	720
	22326 CW33	3	2	-	-	130	280	93	28,5	978	1320

- warehouse - order - phone

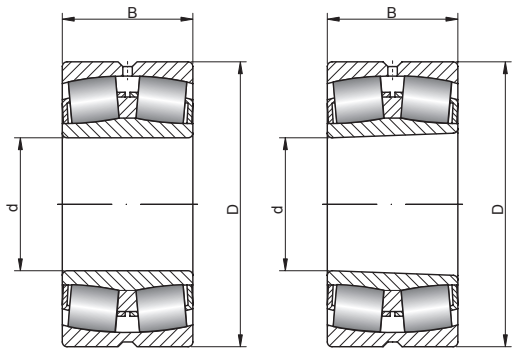

238.. 239.. 230.. 240..
231.. 241.. 222.. 232..
223.. 233..

K, K30
1:30 taper
240.. K30 241.. K30

Limiting speed [rpm]		Basic makes*					Bearing No.
grease	oil	-	M	TV	C3	C4	
1500	1750	●	●	●	●	●	**20221 C**
2200	3000	■	◴	◴	◴	◴	**23022 CW33**
2200	3000	■	◴	◴	◴	◴	**23022 KCW33**
1900	2600	■	◴	●	◴	◴	**23122 CW33**
1900	2600	■	◴	●	◴	◴	**23122 KCW33**
1000	1400	●	●	●	●	●	**24122 CW33**
1000	1400	●	●	●	●	●	**24122 K30CW33**
1250	1750	●	●	●	●	●	**20222 C**
1250	1750	●	●	●	●	●	**20222 KC**
2000	2800	■	◴	●	◴	◴	**22222 CW33**
2000	2800	■	◴	●	◴	◴	**22222 KCW33**
1600	2000	■	◴	●	◴	◴	**23222 CW33**
1600	2000	■	◴	●	◴	◴	**23222 KCW33**
1250	1500	●	●	●	●	●	**20322 C**
1600	2000	■	◴	●	◴	◴	**21322 CW33**
1600	2000	■	◴	●	◴	◴	**21322 KCW33**
1600	2000	■	◴	●	◴	◴	**22322 CW33**
1600	2000	■	◴	●	◴	◴	**22322 KCW33**
1550	1950	●	●	●	●	●	**23322 CW33**
2000	2800	■	◴	●	◴	◴	**23024 CW33**
2000	2800	■	◴	●	◴	◴	**23024 KCW33**
1600	2000	●	●	●	●	●	**24024 CW33**
1700	2300	●	●	●	●	●	**24024 K30CW33**
1800	2400	■	◴	●	◴	◴	**23124 CW33**
1800	2400	■	◴	●	◴	◴	**23124 KCW33**
900	1200	●	●	●	●	●	**24124 CW33**
900	1200	●	●	●	●	●	**24124 K30CW33**
1250	1750	●	●	●	●	●	**20224 C**
1250	1750	●	●	●	●	●	**20224 KC**
1900	2600	■	◴	●	◴	◴	**22224 CW33**
1900	2600	■	◴	●	◴	◴	**22224 KCW33**
1500	1900	■	◴	●	◴	◴	**23224 CW33**
1500	1900	■	◴	●	◴	◴	**23224 KCW33**
1000	1500	●	●	●	●	●	**20324 C**
1400	1800	■	◴	●	◴	◴	**22324 CW33**
1400	1800	■	◴	●	◴	◴	**22324 KCW33**
1350	1750	●	●	●	●	●	**23324 CW33**
1900	2600	■	◴	●	◴	◴	**23026 CW33**
1900	2600	■	◴	●	◴	◴	**23026 KCW33**
1600	2000	●	●	●	●	●	**24026 CW33**
1600	2100	●	●	●	●	●	**24026 K30CW33**
1700	2200	■	◴	●	◴	◴	**23126 CW33**
1700	2200	■	◴	●	◴	◴	**23126 KCW33**
900	1200	●	●	●	●	●	**24126 CW33**
900	1200	●	●	●	●	●	**24126 K30CW33**
1250	1500	●	●	●	●	●	**20226 C**
1250	1500	●	●	●	●	●	**20226 KC**
1800	2400	■	◴	●	◴	◴	**22226 CW33**
1800	2400	■	◴	●	◴	◴	**22226 KCW33**
1300	1700	■	◴	●	◴	◴	**23226 CW33**
1300	1700	■	◴	●	◴	◴	**23226 KCW33**
1000	1500	●	●	●	●	●	**20326 C**
1300	1700	■	◴	●	◴	◴	**22326 CW33**

* Other products also available



https://nppnovoteh.com

7. SPHERICAL ROLLER BEARINGS

7.1. Single-row and double-row spherical roller bearings



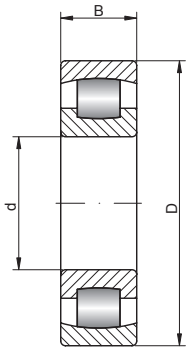

202.. 203..

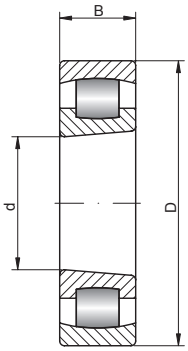

202.. K 203.. K

130 – 160 mm

d [mm]	Bearing No.	Series		Sleeve No.		Dimensions [mm]			Weight [kg]	Basic load ratings [kN]	
		SD	SB	H..	AH..	d	D	B		dyn. C	stat. C_0
130 cont.	**22326 KCW33**	3	2	H2326	AH2326	130	280	93	26,7	978	1320
	23326 CW33	3	3	-	-	130	280	112	35,3	1160	1600
140	**23028 CW33**	0	3	-	-	140	210	53	6,55	397	680
	23028 KCW33	0	3	H3028	AH3028	140	210	53	6	397	680
	24028 CW33	0	4	-	-	140	210	69	8,45	495	900
	24028 K30CW33	0	4	-	AH24028	140	210	69	8,5	495	900
	23128 CW33	1	3	-	-	140	225	68	10,5	546	900
	23128 KCW33	1	3	H3128	AH3128	140	225	68	9,8	546	900
	24128 CW33	1	4	-	-	140	225	85	13	673	1160
	24128 K30CW33	1	4	-	AH24128	140	225	85	13	673	1160
	20228 C	2	0	-	-	140	250	42	9,09	390	530
	20228 KC	2	0	H3028	-	140	250	42	9	390	530
	22228 CW33	2	2	-	-	140	250	68	14	610	900
	22228 KCW33	2	2	H3128	AH3128	140	250	68	13,5	610	900
	23228 CW33	2	3	-	-	140	250	88	18,5	799	1250
	23228 KCW33	2	3	H2328	AH3228	140	250	88	17,7	799	1250
	20328 C	3	0	-	-	140	300	62	22,5	640	850
	22328 CW33	3	2	-	-	140	300	102	34,5	1130	1560
	22328 KCW33	3	2	H2328	AH2328	140	300	102	34	1130	1560
	23328 CW33	3	3	-	-	140	300	118	40,7	1270	1800
150	**23930 CW33**	9	3	-	-	150	210	45	4,97	334	622
	23930 KCW33	9	3	H3930	-	150	210	45	4,81	334	622
	23030 CW33	0	3	-	-	150	225	56	7,95	437	750
	23030 KCW33	0	3	H3030	AH3030	150	225	56	7	437	750
	24030 CW33	0	4	-	-	150	225	75	10,5	564	1040
	24030 K30CW33	0	4	-	AH24030	150	225	75	10,5	564	1040
	23130 CW33	1	3	-	-	150	250	80	16	725	1200
	23130 KCW33	1	3	H3130	AH3130	150	250	80	15	725	1200
	24130 CW33	1	4	-	-	150	250	100	19,5	897	1530
	24130 K30CW33	1	4	-	AH24130	150	250	100	19,5	897	1530
	20230 C	2	0	-	-	150	270	45	11,7	430	610
	20230 KC	2	0	H3030	-	150	270	45	11,5	430	610
	22230 CW33	2	2	-	-	150	270	73	18	736	1080
	22230 KCW33	2	2	H3130	AH3130	150	270	73	17	736	1080
	23230 CW33	2	3	-	-	150	270	96	24	937	1460
	23230 KCW33	2	3	H2330	AH3230	150	270	96	22	937	1460
	20330 C	3	0	-	-	150	320	65	26,9	720	950
	22330 CW33	3	2	-	-	150	320	108	41,5	1270	1760
	22330 KCW33	3	2	H2330	AH2330	150	320	108	40,6	1270	1760
	23330 CW33	3	3	-	-	150	320	128	49,8	1500	2120
160	**23932 CW33**	9	3	-	-	160	220	45	5,25	341	649
	23932 KCW33	9	3	H3932	-	160	220	45	5,08	341	649
	23032 CW33	0	3	-	-	160	240	60	9,7	506	880
	23032 KCW33	0	3	H3032	AH3032	160	240	60	8	506	880
	24032 CW33	0	4	-	-	160	240	80	13	656	1200
	24032 K30CW33	0	4	-	AH24032	160	240	80	13	656	1200
	23132 CW33	1	3	-	-	160	270	86	20,5	845	1370
	23132 KCW33	1	3	H3132	AH3132	160	270	86	19	845	1370
	24132 CW33	1	4	-	-	160	270	109	25	1040	1760
	24132 K30CW33	1	4	-	AH24132	160	270	109	25	1040	1760
	20232 C	2	0	-	-	160	290	48	14,5	500	720
	20232 KC	2	0	H3032	-	160	290	48	14,3	500	720
	22232 CW33	2	2	-	-	160	290	80	22,5	863	1290

- warehouse - order - phone

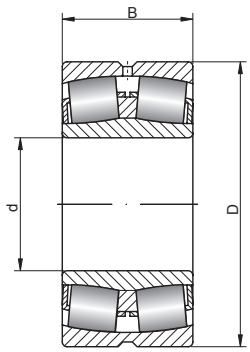

238.. 239.. 230.. 240..
231.. 241.. 222.. 232..
223.. 233..

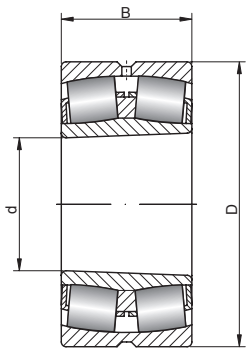

K, K30
1:30 taper
240.. K30 241.. K30

Limiting speed [rpm]		Basic makes*					Bearing No.
grease	oil	-	M	TV	C3	C4	
1300	1700	●	◴	●	◴	◴	**22326 KCW33**
1250	1650	●	●	●	●	●	**23326 CW33**
1800	2400	●	◴	●	◴	◴	**23028 CW33**
1800	2400	●	◴	●	◴	◴	**23028 KCW33**
1400	1800	●	●	●	●	●	**24028 CW33**
1400	1800	●	●	●	●	●	**24028 K30CW33**
1600	2000	●	◴	●	◴	◴	**23128 CW33**
1600	2000	●	◴	●	◴	◴	**23128 KCW33**
850	1100	●	●	●	●	●	**24128 CW33**
850	1100	●	●	●	●	●	**24128 K30CW33**
1000	1500	●	●	●	●	●	**20228 C**
1000	1500	●	●	●	●	●	**20228 KC**
1700	2200	●	◴	●	◴	◴	**22228 CW33**
1700	2200	●	◴	●	◴	◴	**22228 KCW33**
1200	1600	●	◴	●	◴	◴	**23228 CW33**
1200	1600	●	◴	●	◴	◴	**23228 KCW33**
1000	1250	●	●	●	●	●	**20328 C**
1100	1500	●	◴	●	◴	◴	**22328 CW33**
1100	1500	●	◴	●	◴	◴	**22328 KCW33**
1050	1450	●	●	●	●	●	**23328 CW33**
1900	2550	●	◴	●	◴	◴	**23930 CW33**
1900	2550	●	◴	●	◴	◴	**23930 KCW33**
1700	2200	●	◴	●	◴	◴	**23030 CW33**
1700	2200	●	◴	●	◴	◴	**23030 KCW33**
1300	1700	●	●	●	●	●	**24030 CW33**
1300	1700	●	●	●	●	●	**24030 K30CW33**
1400	1800	●	◴	●	◴	◴	**23130 CW33**
1400	1800	●	◴	●	◴	◴	**23130 KCW33**
800	1000	●	●	●	●	●	**24130 CW33**
800	1000	●	●	●	●	●	**24130 K30CW33**
1000	1250	●	●	●	●	●	**20230 C**
1000	1250	●	●	●	●	●	**20230 KC**
1600	2000	●	◴	●	◴	◴	**22230 CW33**
1600	2000	●	◴	●	◴	◴	**22230 KCW33**
1100	1500	●	◴	●	◴	◴	**23230 CW33**
1100	1500	●	◴	●	◴	◴	**23230 KCW33**
1000	1250	●	●	●	●	●	**20330 C**
1000	1400	●	◴	●	◴	◴	**22330 CW33**
1000	1400	●	◴	●	◴	◴	**22330 KCW33**
950	1350	●	●	●	●	●	**23330 CW33**
1850	2450	●	◴	●	◴	◴	**23932 CW33**
1850	2450	●	◴	●	◴	◴	**23932 KCW33**
1700	2200	●	◴	●	◴	◴	**23032 CW33**
1700	2200	●	◴	●	◴	◴	**23032 KCW33**
1100	1500	●	●	●	●	●	**24032 CW33**
1100	1500	●	●	●	●	●	**24032 K30CW33**
1300	1700	●	◴	●	◴	◴	**23132 CW33**
1300	1700	●	◴	●	◴	◴	**23132 KCW33**
700	900	●	●	●	●	●	**24132 CW33**
700	900	●	●	●	●	●	**24132 K30CW33**
1000	1250	●	●	●	●	●	**20232 C**
1000	1250	●	●	●	●	●	**20232 KC**
1500	1900	●	◴	●	◴	◴	**22232 CW33**

* Other products also available



https://nppnovoteh.com

7. SPHERICAL ROLLER BEARINGS

7.1. Single-row and double-row spherical roller bearings



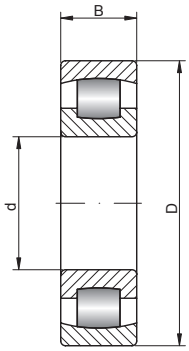

202.. 203..

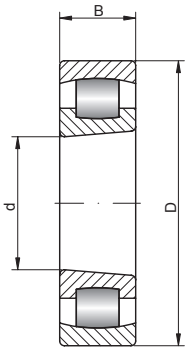

202.. K 203.. K

160 – 190 mm

d [mm]	Bearing No.	Series		Sleeve No.		Dimensions [mm]			Weight [kg]	Basic load ratings [kN]	
		SD	SB	H..	AH..	d	D	B		dyn. C	stat. C_0
160 cont.	**22232 KCW33**	2	2	H3132	AH3132	160	290	80	22,5	863	1290
	23232 CW33	2	3	-	-	160	290	104	30	1070	1660
	23232 KCW33	2	3	H2332	AH3232	160	290	104	28,9	1070	1660
	22332 CW33	3	2	-	-	160	340	114	50	1380	1960
	22332 KCW33	3	2	H2332	AH2332	160	340	114	50,5	1380	1960
	23332 CW33	3	3	-	-	160	340	136	62,6	1660	2320
170	**23934 CW33**	9	3	-	-	170	230	45	5,53	353	691
	23934 KCW33	9	3	H3934	-	170	230	45	5,35	353	691
	23034 CW33	0	3	-	-	170	260	67	13	621	1060
	23034 KCW33	0	3	H3034	AH3034	170	260	67	12,1	621	1060
	24034 CW33	0	4	-	-	170	260	90	17,5	799	1460
	24034 K30CW33	0	4	-	AH24034	170	260	90	17,5	799	1460
	23134 CW33	1	3	-	-	170	280	88	21,5	897	1500
	23134 KCW33	1	3	H3134	AH3134	170	280	88	20,6	897	1500
	24134 CW33	1	4	-	-	170	280	109	26,5	1070	1860
	24134 K30CW33	1	4	-	AH24134	170	280	109	26,5	1070	1860
	20234 C	2	0	-	-	170	310	52	17,9	570	830
	22234 CW33	2	2	-	-	170	310	86	28,5	978	1460
	22234 KCW33	2	2	H3134	AH3134	170	310	86	26,3	978	1460
	23234 CW33	2	3	-	-	170	310	110	36,5	1220	1930
	23234 KCW33	2	3	H2334	AH3234	170	310	110	34,2	1220	1930
	22334 CW33	3	2	-	-	170	360	120	58,5	1540	2160
	22334 KCW33	3	2	H2334	AH2334	170	360	120	58,2	1540	2160
180	**23936 CW33**	9	3	-	-	180	250	52	8,2	431	830
	23936 KCW33	9	3	H3936	AH3936	180	250	52	7,7	431	830
	23036 CW33	0	3	-	-	180	280	74	17	725	1250
	23036 KCW33	0	3	H3036	AH3036	180	280	74	16,6	725	1250
	24036 CW33	0	4	-	-	180	280	100	23	937	1730
	24036 K30CW33	0	4	-	AH24036	180	280	100	23	937	1730
	23136 CW33	1	3	-	-	180	300	96	27,5	1050	1760
	23136 KCW33	1	3	H3136	AH3136	180	300	96	26,8	1050	1760
	24136 CW33	1	4	-	-	180	300	118	33,5	1220	2160
	24136 K30CW33	1	4	-	AH24136	180	300	118	33,5	1220	2160
	20236 C	2	0	-	-	180	320	52	18,4	585	850
	22236 CW33	2	2	-	-	180	320	86	29,5	1010	1560
	22236 KCW33	2	2	H3136	AH2236	180	320	86	28,5	1010	1560
	23236 CW33	2	3	-	-	180	320	112	39	1290	2120
	23236 KCW33	2	3	H2336	AH3236	180	320	112	38,6	1290	2120
	22336 CW33	3	2	-	-	180	380	126	69	1730	2450
	22336 KCW33	3	2	H2336	AH2336	180	380	126	68,5	1730	2450
190	**23938 CW33**	9	3	-	-	190	260	52	8,4	414	800
	23938 KCW33	9	3	H3938	AH3938	190	260	52	8,3	414	800
	23038 CW33	0	3	-	-	190	290	75	18	753	1340
	23038 KCW33	0	3	H3038	AH3038	190	290	75	16,9	753	1340
	24038 CW33	0	4	-	-	190	290	100	24	978	1800
	24038 K30CW33	0	4	-	AH24038	190	290	100	24	978	1800
	23138 CW33	1	3	-	-	190	320	104	34,5	1200	2080
	23138 KCW33	1	3	H3138	AH3138	190	320	104	31,4	1200	2080
	24138 CW33	1	4	-	-	190	320	128	42	1400	2500
	24138 K30CW33	1	4	-	AH24138	190	320	128	42	1400	2500
	20238 C	2	0	-	-	190	340	55	22,5	640	950
	22238 CW33	2	2	-	-	190	340	92	36,5	1110	1700
	22238 KCW33	2	2	H3138	AH2238	190	340	92	37	1110	1700

- warehouse - order - phone

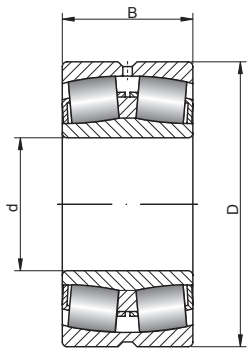

238.. 239.. 230.. 240..
231.. 241.. 222.. 232..
223.. 233..

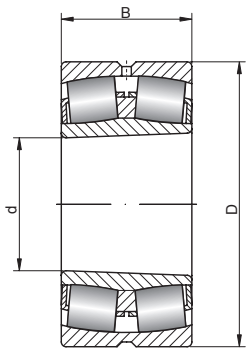

K, K30
1:30 taper
240.. K30 241.. K30

Limiting speed [rpm]		Basic makes*					Bearing No.
grease	oil	-	M	TV	C3	C4	
1500	1900	●	◴	◝	◴	◴	**22232 KCW33**
1000	1400	●	◴	◝	◴	◴	**23232 CW33**
1000	1400	●	◴	◝	◴	◴	**23232 KCW33**
950	1300	●	◴	◝	◴	◴	**22332 CW33**
950	1300	●	◴	◝	◴	◴	**22332 KCW33**
900	1250	◝	◝	◝	◝	◝	**23332 CW33**
1800	2350	●	◴	◝	◴	◴	**23934 CW33**
1800	2350	●	◴	◝	◴	◴	**23934 KCW33**
1600	2000	●	◴	◝	◴	◴	**23034 CW33**
1600	2000	●	◴	◝	◴	◴	**23034 KCW33**
1000	1400	◝	◝	◝	◝	◝	**24034 CW33**
1000	1400	◝	◝	◝	◝	◝	**24034 K30CW33**
1200	1600	●	◴	◝	◴	◴	**23134 CW33**
1200	1600	●	◴	◝	◴	◴	**23134 KCW33**
670	850	◝	◝	◝	◝	◝	**24134 CW33**
670	850	◝	◝	◝	◝	◝	**24134 K30CW33**
1000	1250	◝	◝	◝	◝	◝	**20234 C**
1300	1700	●	◴	◝	◴	◴	**22234 CW33**
1300	1700	●	◴	◝	◴	◴	**22234 KCW33**
950	1300	●	◴	◝	◴	◴	**23234 CW33**
950	1300	●	◴	◝	◴	◴	**23234 KCW33**
950	1300	●	◴	◝	◴	◴	**22334 CW33**
950	1300	●	◴	◝	◴	◴	**22334 KCW33**
1700	2200	●	◴	◝	◴	◴	**23936 CW33**
1700	2200	●	◴	◝	◴	◴	**23936 KCW33**
1400	1800	●	◴	◝	◴	◴	**23036 CW33**
1400	1800	●	◴	◝	◴	◴	**23036 KCW33**
950	1300	◝	◝	◝	◝	◝	**24036 CW33**
950	1300	◝	◝	◝	◝	◝	**24036 K30CW33**
1100	1500	●	◴	◝	◴	◴	**23136 CW33**
1100	1500	●	◴	◝	◴	◴	**23136 KCW33**
630	800	◝	◝	◝	◝	◝	**24136 CW33**
630	800	◝	◝	◝	◝	◝	**24136 K30CW33**
750	1000	◝	◝	◝	◝	◝	**20236 C**
1300	1700	●	◴	◝	◴	◴	**22236 CW33**
1300	1700	●	◴	◝	◴	◴	**22236 KCW33**
900	1200	●	◴	◝	◴	◴	**23236 CW33**
900	1200	●	◴	◝	◴	◴	**23236 KCW33**
900	1200	●	◴	◝	◴	◴	**22336 CW33**
900	1200	●	◴	◝	◴	◴	**22336 KCW33**
1700	2200	●	◴	◝	◴	◴	**23938 CW33**
1700	2200	●	◴	◝	◴	◴	**23938 KCW33**
1300	1700	●	◴	◝	◴	◴	**23038 CW33**
1300	1700	●	◴	◝	◴	◴	**23038 KCW33**
950	1300	◝	◝	◝	◝	◝	**24038 CW33**
950	1300	◝	◝	◝	◝	◝	**24038 K30CW33**
1000	1400	●	◴	◝	◴	◴	**23138 CW33**
1000	1400	●	◴	◝	◴	◴	**23138 KCW33**
600	750	◝	◝	◝	◝	◝	**24138 CW33**
600	750	◝	◝	◝	◝	◝	**24138 K30CW33**
750	1000	◝	◝	◝	◝	◝	**20238 C**
1200	1600	●	◴	◝	◴	◴	**22238 CW33**
1200	1600	●	◴	◝	◴	◴	**22238 KCW33**

* Other products also available



https://nppnovoteh.com

7. SPHERICAL ROLLER BEARINGS

7.1. Single-row and double-row spherical roller bearings



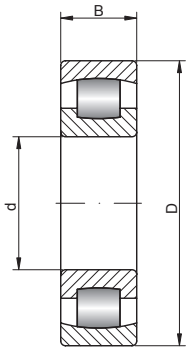

202.. 203..

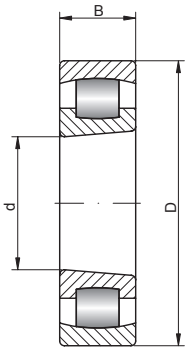

202.. K 203.. K

190 – 240 mm

d [mm]	Bearing No.	Series		Sleeve No.		Dimensions [mm]			Weight [kg]	Basic load ratings [kN]	
		SD	SB	H..	AH..	d	D	B		dyn. C	stat. C_0
190 cont.	**23238 CW33**	2	3	-	-	190	340	120	47,5	1460	2400
	23238 KCW33	2	3	H2338	AH3238	190	340	120	47,5	1460	2400
	22338 CW33	3	2	-	-	190	400	132	80	1870	2650
	22338 KCW33	3	2	H2338	AH2338	190	400	132	79,4	1870	2650
	23338 CW33	3	3	-	-	190	400	155	97,1	2200	3200
200	**23940 CW33**	9	3	-	-	200	280	60	11,5	546	1040
	23940 KCW33	9	3	H3940	AH3940	200	280	60	12,3	546	1040
	23040 CW33	0	3	-	-	200	310	82	23	880	1530
	23040 KCW33	0	3	H3040	AH3040	200	310	82	22,3	880	1530
	24040 CW33	0	4	-	-	200	310	109	30,5	1130	2120
	24040 K30CW33	0	4	-	AH24040	200	310	109	30,5	1130	2120
	23140 CW33	1	3	-	-	200	340	112	42,5	1380	2360
	23140 KCW33	1	3	H3140	AH3140	200	340	112	41,6	1380	2360
	24140 CW33	1	4	-	-	200	340	140	52	1580	2800
	24140 K30CW33	1	4	-	AH24140	200	340	140	52	1580	2800
	20240 C	2	0	-	-	200	360	58	26,7	735	1080
	22240 CW33	2	2	-	-	200	360	98	43,5	1270	1930
	22240 KCW33	2	2	H3140	AH2240	200	360	98	43,2	1270	1930
	23240 CW33	2	3	-	-	200	360	128	57	1610	2700
	23240 KCW33	2	3	H2340	AH3240	200	360	128	57,6	1610	2700
	22340 CW33	3	2	-	-	200	420	138	92,5	2020	2900
	22340 KCW33	3	2	H2340	AH2340	200	420	138	90,4	2020	2900
	23340 CW33	3	3	-	-	200	420	165	108	2450	3600
220	**23944 CW33**	9	3	-	-	220	300	60	13	546	1080
	23944 KCW33	9	3	H3944	AH3944	220	300	60	12,2	546	1080
	23044 CW33	0	3	-	-	220	340	90	30,5	1050	1860
	23044 KCW33	0	3	H3044	AH3044	220	340	90	30,2	1050	1860
	24044 CW33	0	4	-	-	220	340	118	39,5	1360	2600
	24044 K30CW33	0	4	-	AH24044	220	340	118	39,5	1360	2600
	23144 CW33	1	3	-	-	220	370	120	53	1580	2750
	23144 KCW33	1	3	H3144	AH3144	220	370	120	52,5	1580	2750
	24144 CW33	1	4	-	-	220	370	150	65	1840	3350
	24144 K30CW33	1	4	-	AH24144	220	370	150	65	1840	3350
	20244 C	2	0	-	-	220	400	65	37,4	880	1320
	22244 CW33	2	2	-	-	220	400	108	60,5	1520	2360
	22244 KCW33	2	2	H3144	AH2244	220	400	108	59,6	1520	2360
	23244 CW33	2	3	-	-	220	400	144	79,5	2070	3450
	23244 KCW33	2	3	H2344	AH2344	220	400	144	81,4	2070	3450
	22344 CW33	3	2	-	-	220	460	145	120	2350	3450
	22344 KCW33	3	2	H2344	AH2344	220	460	145	117	2350	3450
240	**23948 CW33**	9	3	-	-	240	320	60	14	564	1160
	23948 KCW33	9	3	H3948	AH3948	240	320	60	13,5	564	1160
	23048 CW33	0	3	-	-	240	360	92	33,5	1130	2080
	23048 KCW33	0	3	H3048	AH3048	240	360	92	33	1130	2080
	24048 CW33	0	4	-	-	240	360	118	42,5	1380	2700
	24048 K30CW33	0	4	-	AH24048	240	360	118	43,5	1380	2700
	23148 CW33	1	3	-	-	240	400	128	65,5	1790	3200
	23148 KCW33	1	3	H3148	AH3148	240	400	128	65	1790	3200
	24148 CW33	1	4	-	-	240	400	160	80,5	2100	3900
	24148 K30CW33	1	4	-	AH24148	240	400	160	80,5	2100	3900
	20248 C	2	0	-	-	240	440	72	50,5	1060	1600
	22248 CW33	2	2	-	-	240	440	120	83	1910	3000
	22248 KCW33	2	2	H3148	AH2248	240	440	120	81,2	1910	3000

- warehouse - order - phone

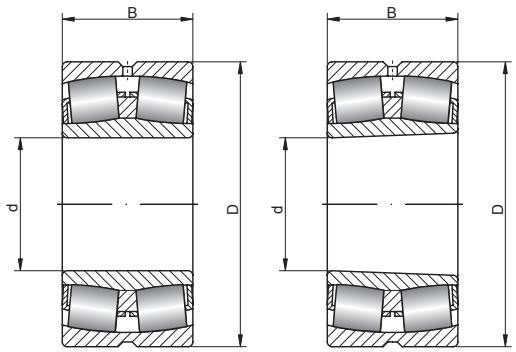

238.. 239.. 230.. 240..
231.. 241.. 222.. 232..
223.. 233..

K, K30
1:30 taper
240.. K30 241.. K30

Limiting speed [rpm]		Basic makes*					Bearing No.
grease	oil	-	M	TV	C3	C4	
850	1100	●	◴	◝	◴	◴	**23238 CW33**
850	1100	●	◴	◝	◴	◴	**23238 KCW33**
850	1100	●	◴	◝	◴	◴	**22338 CW33**
850	1100	●	◴	◝	◴	◴	**22338 KCW33**
800	1050	◝	◝	◝	◝	◝	**23338 CW33**
1600	2000	●	◴	◝	◴	◴	**23940 CW33**
1600	2000	●	◴	◝	◴	◴	**23940 KCW33**
1200	1600	●	◴	◝	◴	◴	**23040 CW33**
1200	1600	●	◴	◝	◴	◴	**23040 KCW33**
900	1200	◝	◝	◝	◝	◝	**24040 CW33**
900	1200	◝	◝	◝	◝	◝	**24040 K30CW33**
950	1300	●	◴	◝	◴	◴	**23140 CW33**
950	1300	●	◴	◝	◴	◴	**23140 KCW33**
560	700	◝	◝	◝	◝	◝	**24140 CW33**
560	700	◝	◝	◝	◝	◝	**24140 K30CW33**
750	1000	◝	◝	◝	◝	◝	**20240 C**
1100	1500	●	◴	◝	◴	◴	**22240 CW33**
1100	1500	●	◴	◝	◴	◴	**22240 KCW33**
850	1100	●	◴	◝	◴	◴	**23240 CW33**
850	1100	●	◴	◝	◴	◴	**23240 KCW33**
850	1100	●	◴	◝	◴	◴	**22340 CW33**
850	1100	●	◴	◝	◴	◴	**22340 KCW33**
800	1050	◝	◝	◝	◝	◝	**23340 CW33**
1500	1900	●	◴	◝	◴	◴	**23944 CW33**
1500	1900	●	◴	◝	◴	◴	**23944 KCW33**
1100	1500	●	◴	◝	◴	◴	**23044 CW33**
1100	1500	●	◴	◝	◴	◴	**23044 KCW33**
850	1100	◝	◝	◝	◝	◝	**24044 CW33**
850	1100	◝	◝	◝	◝	◝	**24044 K30CW33**
900	1200	●	◴	◝	◴	◴	**23144 CW33**
900	1200	●	◴	◝	◴	◴	**23144 KCW33**
500	630	◝	◝	◝	◝	◝	**24144 CW33**
500	630	◝	◝	◝	◝	◝	**24144 K30CW33**
750	1000	◝	◝	◝	◝	◝	**20244 C**
950	1300	●	◴	◝	◴	◴	**22244 CW33**
950	1300	●	◴	◝	◴	◴	**22244 KCW33**
750	950	●	◴	◝	◴	◴	**23244 CW33**
750	950	●	◴	◝	◴	◴	**23244 KCW33**
750	950	●	◴	◝	◴	◴	**22344 CW33**
750	950	●	◴	◝	◴	◴	**22344 KCW33**
1300	1700	●	◴	◝	◴	◴	**23948 CW33**
1300	1700	●	◴	◝	◴	◴	**23948 KCW33**
1000	1400	●	◴	◝	◴	◴	**23048 CW33**
1000	1400	●	◴	◝	◴	◴	**23048 KCW33**
800	1000	◝	◝	◝	◝	◝	**24048 CW33**
800	1000	◝	◝	◝	◝	◝	**24048 K30CW33**
850	1100	●	◴	◝	◴	◴	**23148 CW33**
850	1100	●	◴	◝	◴	◴	**23148 KCW33**
480	600	◝	◝	◝	◝	◝	**24148 CW33**
480	600	◝	◝	◝	◝	◝	**24148 K30CW33**
750	750	◝	◝	◝	◝	◝	**20248 C**
900	1200	●	◴	◝	◴	◴	**22248 CW33**
900	1200	●	◴	◝	◴	◴	**22248 KCW33**

* Other products also available



https://nppnovoteh.com

7. SPHERICAL ROLLER BEARINGS

7.1. Single-row and double-row spherical roller bearings



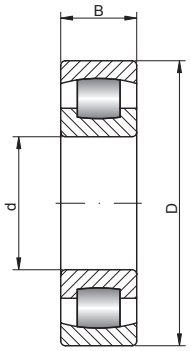

202.. 203..

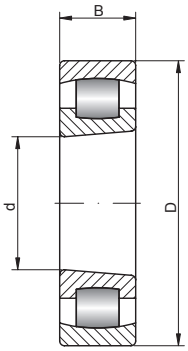

202.. K 203.. K

240 – 300 mm

d [mm]	Bearing No.	Series		Sleeve No.		Dimensions [mm]			Weight [kg]	Basic load ratings [kN]	
		SD	SB	H..	AH..	d	D	B		dyn. C	stat. C_0
240 cont.	**23248 CW33**	2	3	-	-	240	440	160	110	2530	4300
	23248 KCW33	2	3	H2348	AH2348	240	440	160	108	2530	4300
	22348 CW33	3	2	-	-	240	500	155	155	2670	4000
	22348 KCW33	3	2	H2348	AH2348	240	500	155	149	2670	4000
260	**23952 CW33**	9	3	-	-	260	360	75	24	880	1800
	23952 KCW33	9	3	H3952	AH3952	260	360	75	22,4	880	1800
	23052 CW33	0	3	-	-	260	400	104	48,5	1400	2550
	23052 KCW33	0	3	H3052	AH3052	260	400	104	47,9	1400	2550
	24052 CW33	0	4	-	-	260	400	140	64,5	1760	3450
	24052 K30CW33	0	4	-	AH24052	260	400	140	65	1760	3450
	23152 CW33	1	3	-	-	260	440	144	90,5	2220	3900
	23152 KCW33	1	3	H3152	AH3152	260	440	144	93	2220	3900
	24152 CW33	1	4	-	-	260	440	180	110	2620	4800
	24152 K30CW33	1	4	-	AH24152	260	440	180	110	2620	4800
	20252 C	2	0	-	-	260	480	80	68,2	1270	1930
	22252 CW33	2	2	-	-	260	480	130	110	2300	3550
	22252 KCW33	2	2	H3152	AH2252	260	480	130	108	2300	3550
	23252 CW33	2	3	-	-	260	480	174	140	2820	4750
	23252 KCW33	2	3	H2352	AH2352	260	480	174	140	2820	4750
	22352 CW33	3	2	-	-	260	540	165	190	3050	4550
	22352 KCW33	3	2	H2352	AH2352	260	540	165	181	3050	4550
280	**23956 CW33**	9	3	-	-	280	380	75	26	965	2040
	23956 KCW33	9	3	H3956	AH3956	280	380	75	25,1	965	2040
	23056 CW33	0	3	-	-	280	420	106	52,5	1520	2850
	23056 KCW33	0	3	H3056	AH3056	280	420	106	52,2	1520	2850
	24056 CW33	0	4	-	-	280	420	140	68,5	1870	3800
	23156 CW33	1	3	-	-	280	460	146	97	2300	4250
	23156 KCW33	1	3	H3156	AH3156	280	460	146	96,4	2300	4250
	24156 CW33	1	4	-	-	280	460	180	120	2670	5100
	24156 K30CW33	1	4	-	AH24156	280	460	180	120	2670	5100
	22256 CW33	2	2	-	-	280	500	130	115	2350	3750
	22256 KCW33	2	2	H3156	AH2256	280	500	130	112	2350	3750
	23256 CW33	2	3	-	-	280	500	176	150	2820	4900
	23256 KCW33	2	3	H2356	AH2356	280	500	176	152	2820	4900
	22356 CW33	3	2	-	-	280	580	175	235	3450	5200
	22356 KCW33	3	2	H2356	AH2356	280	580	175	230	3450	5200
300	**23960 CW33**	9	3	-	-	300	420	90	40,5	1200	2500
	23960 KCW33	9	3	H3960	AH3960	300	420	90	40,4	1200	2500
	23060 CW33	0	3	-	-	300	460	118	71,5	1840	3450
	23060 KCW33	0	3	H3060	AH3060	300	460	118	72,3	1840	3450
	24060 CW33	0	4	-	-	300	460	160	97	2350	4750
	24060 K30CW33	0	4	-	AH24056	300	460	160	98,7	2350	4750
	23160 CW33	1	3	-	-	300	500	160	125	2820	5100
	23160 KCW33	1	3	H3160	AH3160	300	500	160	127	2820	5100
	24160 CW33	1	4	-	-	300	500	200	155	3280	6300
	24160 K30CW33	1	4	-	AH24160	300	500	200	155	3280	6300
	22260 CW33	2	2	-	-	300	540	140	145	2760	4250
	22260 KCW33	2	2	H3160	AH2260	300	540	140	140	2760	4250
	23260 CW33	2	3	-	-	300	540	192	190	3340	5850
	23260 KCW33	2	3	H3260	AH3260	300	540	192	192	3340	5850
	22360 CW33	3	2	-	-	300	620	185	289	3910	5430
	22360 KCW33	3	2	-	-	300	620	185	284	3910	5430

- warehouse - order - phone

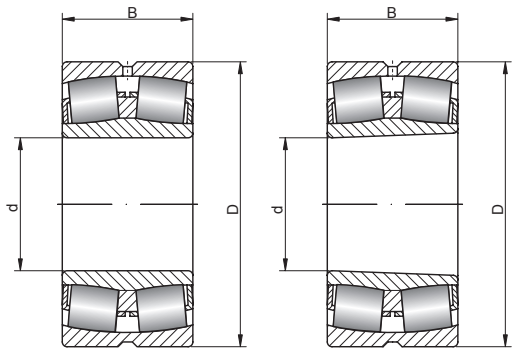

238.. 239.. 230.. 240..
231.. 241.. 222.. 232..
223.. 233..

K, K30
1:30 taper
240.. K30 241.. K30

Limiting speed [rpm]		Basic makes*					Bearing No.
grease	oil	-	M	TV	C3	C4	
670	850	●	◴	◝	◴	◴	**23248 CW33**
670	850	●	◴	◝	◴	◴	**23248 KCW33**
670	850	●	◴	◝	◴	◴	**22348 CW33**
670	850	●	◴	◝	◴	◴	**22348 KCW33**
1100	1500	●	◴	◝	◴	◴	**23952 CW33**
1100	1500	●	◴	◝	◴	◴	**23952 KCW33**
900	1200	●	◴	◝	◴	◴	**23052 CW33**
900	1200	●	◴	◝	◴	◴	**23052 KCW33**
700	900	◝	◝	◝	◝	◝	**24052 CW33**
700	900	◝	◝	◝	◝	◝	**24052 K30CW33**
800	1000	●	◝	◝	◝	◝	**23152 CW33**
800	1000	●	◝	◝	◝	◝	**23152 KCW33**
430	530	◝	◝	◝	◝	◝	**24152 CW33**
430	530	◝	◝	◝	◝	◝	**24152 K30CW33**
500	750	◝	◝	◝	◝	◝	**20252 C**
850	1100	●	◴	◝	◴	◴	**22252 CW33**
850	1100	●	◴	◝	◴	◴	**22252 KCW33**
630	800	●	◴	◝	◴	◴	**23252 CW33**
630	800	●	◴	◝	◴	◴	**23252 KCW33**
630	800	●	◴	◝	◴	◴	**22352 CW33**
630	800	●	◴	◝	◴	◴	**22352 KCW33**
1000	1400	●	◴	◝	◴	◴	**23956 CW33**
1000	1400	●	◴	◝	◴	◴	**23956 KCW33**
850	1100	●	◴	◝	◴	◴	**23056 CW33**
850	1100	●	◴	◝	◴	◴	**23056 KCW33**
670	850	◝	◝	◝	◝	◝	**24056 CW33**
750	950	●	◝	◝	◝	◝	**23156 CW33**
750	950	●	◝	◝	◝	◝	**23156 KCW33**
400	500	◝	◝	◝	◝	◝	**24156 CW33**
400	500	◝	◝	◝	◝	◝	**24156 K30CW33**
800	1000	●	◴	◝	◴	◴	**22256 CW33**
800	1000	●	◴	◝	◴	◴	**22256 KCW33**
600	750	●	◴	◝	◴	◴	**23256 CW33**
600	750	●	◴	◝	◴	◴	**23256 KCW33**
600	750	●	◴	◝	◴	◴	**22356 CW33**
600	750	●	◴	◝	◴	◴	**22356 KCW33**
950	1300	●	◴	◝	◴	◴	**23960 CW33**
950	1300	●	◴	◝	◴	◴	**23960 KCW33**
800	1000	●	◝	◝	◝	◝	**23060 CW33**
800	1000	●	◝	◝	◝	◝	**23060 KCW33**
600	750	◝	◝	◝	◝	◝	**24060 CW33**
600	750	◝	◝	◝	◝	◝	**24060 K30CW33**
670	850	●	◝	◝	◝	◝	**23160 CW33**
670	850	●	◝	◝	◝	◝	**23160 KCW33**
360	450	◝	◝	◝	◝	◝	**24160 CW33**
360	450	◝	◝	◝	◝	◝	**24160 K30CW33**
750	950	●	◴	◝	◴	◴	**22260 CW33**
750	950	●	◴	◝	◴	◴	**22260 KCW33**
530	670	●	◴	◝	◴	◴	**23260 CW33**
530	670	●	◴	◝	◴	◴	**23260 KCW33**
470	630	◴	◴	◝	◴	◴	**22360 CW33**
470	530	◴	◴	◝	◴	◴	**22360 KCW33**

* Other products also available



https://nppnovoteh.com

7. SPHERICAL ROLLER BEARINGS

7.1. Single-row and double-row spherical roller bearings



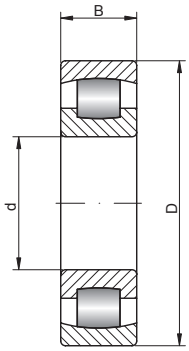

202.. 203..

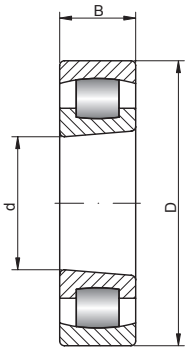

202.. K 203.. K

320 – 380 mm

d [mm]	Bearing No.	Series		Sleeve No.		Dimensions [mm]			Weight [kg]	Basic load ratings [kN]	
		SD	SB	H..	AH..	d	D	B		dyn. C	stat. C_0
320	**23964 CW33**	9	3	-	-	320	440	90	42	1240	2700
	23964 KCW33	9	3	H3964	AH3964	320	440	90	40,7	1240	2700
	23064 CW33	0	3	-	-	320	480	121	78	1960	3800
	23064 KCW33	0	3	H3064	AH3064	320	480	121	77,8	1960	3800
	24064 CW33	0	4	-	-	320	480	160	100	2480	5100
	24064 K30CW33	0	4	-	AH24060	320	480	160	102	2480	5100
	23164 CW33	1	3	-	-	320	540	176	165	3280	6000
	23164 KCW33	1	3	H3164	AH3164	320	540	176	164	3280	6000
	24164 CW33	1	4	-	-	320	540	218	210	3740	7100
	24164 K30CW33	1	4	-	AH24164	320	540	218	210	3740	7100
	22264 CW33	2	2	-	-	320	580	150	177	3050	4900
	22264 KCW33	2	2	H3164	AH2264	320	580	150	171	3050	4900
	23264 CW33	2	3	-	-	320	580	208	240	3850	6700
	23264 KCW33	2	3	H3264	AH3264	320	580	208	237	3850	6700
340	**23968 CW33**	9	3	-	-	340	460	90	45,5	1270	2800
	23968 KCW33	9	3	H3968	AH3968	340	460	90	44	1270	2800
	23068 CW33	0	3	-	-	340	520	133	105	2350	4550
	23068 KCW33	0	3	H3068	AH3068	340	520	133	104	2350	4550
	24068 CW33	0	4	-	-	340	520	180	140	2990	6200
	24068 K30CW33	0	4	-	AH24064	340	520	180	143	2990	6200
	23168 CW33	1	3	-	-	340	580	190	210	3680	6800
	23168 KCW33	1	3	H3168	AH3168	340	580	190	209	3680	6800
	24168 CW33	1	4	-	-	340	580	243	270	4660	8650
	24168 K30CW33	1	4	-	AH24168	340	580	243	270	4660	8650
	22268 CW33	2	2	-	-	340	620	165	221	3550	5430
	22268 KCW33	2	2	H3168	-	340	620	165	216	3550	5430
	23268 CW33	2	3	-	-	340	620	224	295	4660	8300
	23268 KCW33	2	3	H3268	AH3268	340	620	224	299	4660	8300
360	**23972 CW33**	9	3	-	-	360	480	90	46,5	1290	2900
	23972 KCW33	9	3	H3972	AH3972	360	480	90	45	1290	2900
	23072 CW33	0	3	-	-	360	540	134	110	2390	4800
	23072 KCW33	0	3	H3072	AH3072	360	540	134	110	2390	4800
	24072 CW33	0	4	-	-	360	540	180	145	3110	6550
	24072 K30CW33	0	4	-	AH24068	360	540	180	144	3110	6550
	23172 CW33	1	3	-	-	360	600	192	220	3740	6950
	23172 KCW33	1	3	H3172	AH3172	360	600	192	228	3740	6950
	24172 CW33	1	4	-	-	360	600	243	270	4490	8650
	24172 K30CW33	1	4	-	AH24172	360	600	243	270	4490	8650
	22272 CW33	2	2	-	-	360	650	170	248	3770	5830
	22272 KCW33	2	2	H3172	-	360	650	170	243	3770	5830
	23272 CW33	2	3	-	-	360	650	232	335	4660	8300
	23272 KCW33	2	3	H3272	AH3272	360	650	232	337	4660	8300
380	**23976 CW33**	9	3	-	-	380	520	106	69	1730	3800
	23976 KCW33	9	3	H3976	AH3976	380	520	106	70,5	1730	3800
	23076 CW33	0	3	-	-	380	560	135	115	2480	5000
	23076 KCW33	0	3	H3076	AH3076	380	560	135	116	2480	5000
	24076 CW33	0	4	-	-	380	560	180	150	3160	6800
	24076 K30CW33	0	4	-	AH24072	380	560	180	145	3160	6800
	23176 CW33	1	3	-	-	380	620	194	230	3740	7100
	23176 KCW33	1	3	H3176	AH3176	380	620	194	232	3740	7100
	24176 CW33	1	4	-	-	380	620	243	300	4600	9150
	24176 K30CW33	1	4	-	AH24176	380	620	243	300	4600	9150
	23276 CW33	2	3	-	-	380	680	240	375	5060	9150

- warehouse - order - phone

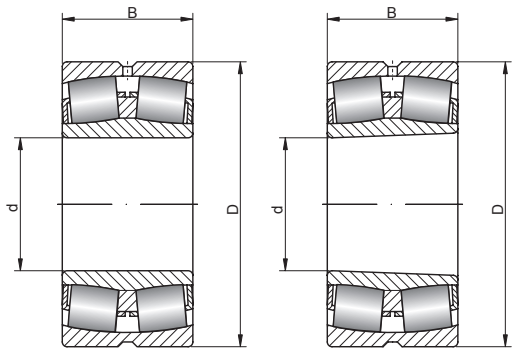

238.. 239.. 230.. 240..
231.. 241.. 222.. 232..
223.. 233..

K, K30
1:30 taper
240.. K30 241.. K30

Limiting speed [rpm]		Basic makes*					Bearing No.
grease	oil	-	M	TV	C3	C4	
900	1200	●	◴	◝	◴	◴	**23964 CW33**
900	1200	◴	◴	◝	◴	◴	**23964 KCW33**
800	1000	●	◝	◝	◝	◝	**23064 CW33**
800	1000	●	◝	◝	◝	◝	**23064 KCW33**
560	700	◝	◝	◝	◝	◝	**24064 CW33**
560	700	◝	◝	◝	◝	◝	**24064 K30CW33**
630	800	●	◝	◝	◝	◝	**23164 CW33**
630	800	●	◝	◝	◝	◝	**23164 KCW33**
340	430	◝	◝	◝	◝	◝	**24164 CW33**
340	430	◝	◝	◝	◝	◝	**24164 K30CW33**
490	660	●	◴	◝	◴	◴	**22264 CW33**
490	660	●	◴	◝	◴	◴	**22264 KCW33**
500	630	●	◴	◝	◴	◴	**23264 CW33**
500	630	●	◴	◝	◴	◴	**23264 KCW33**
900	1200	●	◴	◝	◴	◴	**23968 CW33**
900	1200	●	◴	◝	◴	◴	**23968 KCW33**
700	900	●	◝	◝	◝	◝	**23068 CW33**
700	900	●	◝	◝	◝	◝	**23068 KCW33**
530	670	◝	◝	◝	◝	◝	**24068 CW33**
530	670	◝	◝	◝	◝	◝	**24068 K30CW33**
600	750	●	◝	◝	◝	◝	**23168 CW33**
600	750	●	◝	◝	◝	◝	**23168 KCW33**
320	400	◝	◝	◝	◝	◝	**24168 CW33**
320	400	◝	◝	◝	◝	◝	**24168 K30CW33**
440	590	◴	◴	◝	◴	◴	**22268 CW33**
440	590	◴	◴	◝	◴	◴	**22268 KCW33**
430	530	●	◴	◝	◴	◴	**23268 CW33**
430	530	●	◴	◝	◴	◴	**23268 KCW33**
850	1100	●	◴	◝	◴	◴	**23972 CW33**
850	1100	●	◴	◝	◴	◴	**23972 KCW33**
670	850	◴	◝	◝	◝	◝	**23072 CW33**
670	850	◴	◝	◝	◝	◝	**23072 KCW33**
500	630	◝	◝	◝	◝	◝	**24072 CW33**
500	630	◝	◝	◝	◝	◝	**24072 K30CW33**
560	700	◴	◝	◝	◝	◝	**23172 CW33**
560	700	◴	◝	◝	◝	◝	**23172 KCW33**
300	380	◝	◝	◝	◝	◝	**24172 CW33**
300	380	◝	◝	◝	◝	◝	**24172 K30CW33**
410	550	◴	◴	◝	◴	◴	**22272 CW33**
410	550	◴	◴	◝	◴	◴	**22272 KCW33**
400	500	●	◴	◝	◴	◴	**23272 CW33**
400	500	●	◴	◝	◴	◴	**23272 KCW33**
800	1000	●	◴	◝	◴	◴	**23976 CW33**
800	1000	●	◴	◝	◴	◴	**23976 KCW33**
630	800	◴	◝	◝	◝	◝	**23076 CW33**
630	800	◴	◝	◝	◝	◝	**23076 KCW33**
480	600	◝	◝	◝	◝	◝	**24076 CW33**
480	600	◝	◝	◝	◝	◝	**24076 K30CW33**
400	500	◴	◝	◝	◝	◝	**23176 CW33**
400	500	◴	◝	◝	◝	◝	**23176 KCW33**
190	260	◝	◝	◝	◝	◝	**24176 CW33**
190	260	◝	◝	◝	◝	◝	**24176 K30CW33**
380	480	◴	◴	◝	◴	◴	**23276 CW33**

* Other products also available



https://nppnovoteh.com

7. SPHERICAL ROLLER BEARINGS

7.1. Single-row and double-row spherical roller bearings



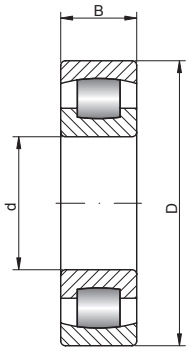

202.. 203..

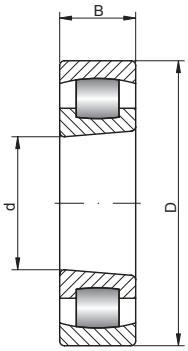

202.. K 203.. K

380 – 480 mm

d [mm]	Bearing No.	Series		Sleeve No.		Dimensions [mm]			Weight [kg]	Basic load ratings [kN]	
		SD	SB	H..	AH..	d	D	B		dyn. C	stat. C_0
380 cont.	**23276 KCW33**	2	3	H3276	AH3276	380	680	240	378	5060	9150
400	**23980 CW33**	9	3	-	-	400	540	106	71	1730	3900
	23980 KCW33	9	3	H3980	AH3980	400	540	106	71	1730	3900
	23080 CW33	0	3	-	-	400	600	148	150	2880	5700
	23080 KCW33	0	3	H3080	AH3080	400	600	148	148	2880	5700
	24080 CW33	0	4	-	-	400	600	200	205	3620	7800
	24080 K30CW33	0	4	-	AH24076	400	600	200	190	3620	7800
	23180 CW33	1	3	-	-	400	650	200	265	4080	7650
	23180 KCW33	1	3	H3180	AH3180	400	650	200	261	4080	7650
	24180 CW33	1	4	-	-	400	650	250	340	4890	9800
	24180 K30CW33	1	4	-	AH24180	400	650	250	340	4890	9800
	23280 CW33	2	3	-	-	400	720	256	450	5750	10400
	23280 KCW33	2	3	H3280	AH3280	400	720	256	454	5750	10400
420	**23984 CW33**	9	3	-	-	420	560	106	74,5	1760	4150
	23984 KCW33	9	3	H3984	AH3984	420	560	106	78	1760	4150
	23084 CW33	0	3	-	-	420	620	150	155	2990	6000
	23084 KCW33	0	3	H3084	AH3084	420	620	150	160	2990	6000
	24084 CW33	0	4	-	-	420	620	200	210	3740	8150
	24084 K30CW33	0	4	-	AH24080	420	620	200	197	3740	8150
	23184 CW33	1	3	-	-	420	700	224	350	4890	9300
	23184 KCW33	1	3	H3184	AH3184	420	700	224	350	4890	9300
	24184 CW33	1	4	-	-	420	700	280	445	5750	11400
	24184 K30CW33	1	4	-	AH24184	420	700	280	445	5750	11400
	23284 CW33	2	3	-	-	420	760	272	535	6330	11600
	23284 KCW33	2	3	H3284	AH3284	420	760	272	552	6330	11600
440	**23988 CW33**	9	3	-	-	440	600	118	99,5	2100	4900
	23988 KCW33	9	3	H3988	AH3988	440	600	118	103	2100	4900
	23088 CW33	0	3	-	-	440	650	157	180	3220	6550
	23088 KCW33	0	3	H3088	AH3088	440	650	157	182	3220	6550
	24088 CW33	0	4	-	-	440	650	212	245	4080	8800
	24088 K30CW33	0	4	-	AH24084	440	650	212	240	4080	8800
	23188 CW33	1	3	-	-	440	720	226	360	5180	10000
	23188 KCW33	1	3	H3188	AH3188	440	720	226	368	5180	10000
	24188 CW33	1	4	-	-	440	720	280	460	5980	12200
	24188 K30CW33	1	4	-	AH24188	440	720	280	460	5980	12200
	23288 CW33	2	3	-	-	440	790	280	590	6730	12500
	23288 KCW33	2	3	H3288	AH3288	440	790	280	604	6730	12500
460	**23992 CW33**	9	3	-	-	460	620	118	105	2190	5000
	23992 KCW33	9	3	H3992	AH3992	460	620	118	106	2190	5000
	23092 CW33	0	3	-	-	460	680	163	205	3450	6950
	23092 KCW33	0	3	H3092	AH3092	460	680	163	206	3450	6950
	24092 CW33	0	4	-	-	460	680	218	275	4370	9500
	24092 K30CW33	0	4	-	AH24088	460	680	218	270	4370	9500
	23192 CW33	1	3	-	-	460	760	240	440	5640	10800
	23192 KCW33	1	3	H3192	AH3192	460	760	240	433	5640	10800
	24192 CW33	1	4	-	-	460	760	300	560	7250	14600
	24192 K30CW33	1	4	-	AH24192	460	760	300	560	7250	14600
	23292 CW33	2	3	-	-	460	830	296	695	7360	13700
	23292 KCW33	2	3	H3292	AH3292	460	830	296	699	7360	13700
480	**23996 CW33**	9	3	-	-	480	650	128	125	2530	5700
	23996 KCW33	9	3	H3996	AH3996	480	650	128	130	2530	5700

- warehouse - order - phone

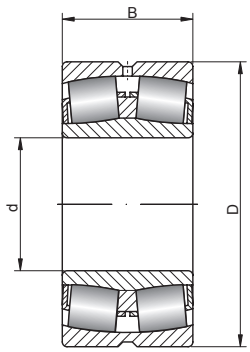

238.. 239.. 230.. 240..
231.. 241.. 222.. 232..
223.. 233..

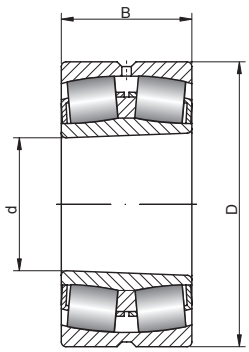

K, K30
1:30 taper
240.. K30 241.. K30

Limiting speed [rpm]		Basic makes*					Bearing No.
grease	oil	-	M	TV	C3	C4	
380	480	◴	◴	◥	◴	◴	**23276 KCW33**
750	950	◴	◴	◥	◴	◴	**23980 CW33**
750	950	◴	◴	◥	◴	◴	**23980 KCW33**
600	750	◴	◥	◥	◥	◥	**23080 CW33**
600	750	◴	◥	◥	◥	◥	**23080 KCW33**
450	560	◥	◥	◥	◥	◥	**24080 CW33**
450	560	◥	◥	◥	◥	◥	**24080 K30CW33**
380	480	◴	◥	◥	◥	◥	**23180 CW33**
380	480	◴	◥	◥	◥	◥	**23180 KCW33**
180	240	◥	◥	◥	◥	◥	**24180 CW33**
180	240	◥	◥	◥	◥	◥	**24180 K30CW33**
340	430	◴	◴	◥	◴	◴	**23280 CW33**
340	430	◴	◴	◥	◴	◴	**23280 KCW33**
700	900	◴	◴	◥	◴	◴	**23984 CW33**
700	900	◴	◴	◥	◴	◴	**23984 KCW33**
450	516	◴	◥	◥	◥	◥	**23084 CW33**
450	516	◴	◥	◥	◥	◥	**23084 KCW33**
380	480	◥	◥	◥	◥	◥	**24084 CW33**
380	480	◥	◥	◥	◥	◥	**24084 K30CW33**
360	450	◴	◥	◥	◥	◥	**23184 CW33**
360	450	◴	◥	◥	◥	◥	**23184 KCW33**
170	220	◥	◥	◥	◥	◥	**24184 CW33**
170	220	◥	◥	◥	◥	◥	**24184 K30CW33**
320	400	◴	◴	◥	◴	◴	**23284 CW33**
320	400	◴	◴	◥	◴	◴	**23284 KCW33**
670	850	◴	◴	◥	◴	◴	**23988 CW33**
670	850	◴	◴	◥	◴	◴	**23988 KCW33**
430	530	◥	◥	◥	◥	◥	**23088 CW33**
430	530	◥	◥	◥	◥	◥	**23088 KCW33**
360	450	◥	◥	◥	◥	◥	**24088 CW33**
360	450	◥	◥	◥	◥	◥	**24088 K30CW33**
340	430	◴	◥	◥	◥	◥	**23188 CW33**
340	430	◴	◥	◥	◥	◥	**23188 KCW33**
170	220	◥	◥	◥	◥	◥	**24188 CW33**
170	220	◥	◥	◥	◥	◥	**24188 K30CW33**
320	400	◥	◥	◥	◥	◥	**23288 CW33**
320	400	◥	◥	◥	◥	◥	**23288 KCW33**
430	530	◥	◥	◥	◥	◥	**23992 CW33**
430	530	◥	◥	◥	◥	◥	**23992 KCW33**
400	500	◥	◥	◥	◥	◥	**23092 CW33**
400	500	◥	◥	◥	◥	◥	**23092 KCW33**
340	430	◥	◥	◥	◥	◥	**24092 CW33**
340	430	◥	◥	◥	◥	◥	**24092 K30CW33**
320	440	◥	◥	◥	◥	◥	**23192 CW33**
320	440	◥	◥	◥	◥	◥	**23192 KCW33**
160	200	◥	◥	◥	◥	◥	**24192 CW33**
160	200	◥	◥	◥	◥	◥	**24192 K30CW33**
300	380	◥	◥	◥	◥	◥	**23292 CW33**
300	380	◥	◥	◥	◥	◥	**23292 KCW33**
410	510	◥	◥	◥	◥	◥	**23996 CW33**
410	510	◥	◥	◥	◥	◥	**23996 KCW33**

* Other products also available

https://nppnovoteh.com

7. SPHERICAL ROLLER BEARINGS

7.1. Single-row and double-row spherical roller bearings



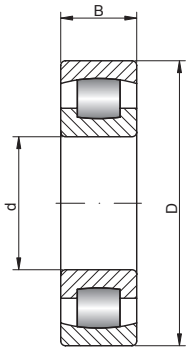

202.. 203..

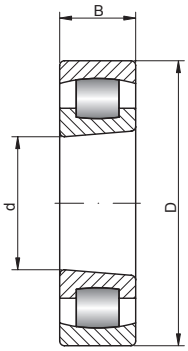

202.. K 203.. K

480 – 600 mm

d [mm]	Bearing No.	Series		Sleeve No.		Dimensions [mm]			Weight [kg]	Basic load ratings [kN]	
		SD	SB	H..	AH..	d	D	B		dyn. C	stat. C_0
480 cont.	**23096 CW33**	0	3	-	-	480	700	165	215	3340	6800
	23096 KCW33	0	3	H3096	AH3096	480	700	165	215	3340	6800
	24096 CW33	0	4	-	-	480	700	218	285	4490	10000
	24096 K30CW33	0	4	-	AH24092	480	700	218	270	4490	10000
	23196 CW33	1	3	-	-	480	790	248	485	6100	12000
	23196 KCW33	1	3	H3196	AH3196	480	790	248	485	6100	12000
	24196 CW33	1	4	-	-	480	790	308	605	7250	15000
	24196 K30CW33	1	4	-	AH24196	480	790	308	605	7250	15000
	23296 CW33	2	3	-	-	480	870	310	800	8170	15000
	23296 KCW33	2	3	H3296	AH3296	480	870	310	820	8170	15000
500	**239/500 CW33**	9	3	-	-	500	670	128	132	2600	6300
	239/500 KCW33	9	3	H39/500	AH39/500	500	670	128	130	2600	6300
	230/500 CW33	0	3	-	-	500	720	167	233	3900	8500
	230/500 KCW33	0	3	H30/500	AH30/500	500	720	167	225	3900	8500
	240/500 CW33	0	4	-	-	500	720	218	297	4900	11200
	240/500 K30CW33	0	4	-	AH240/500	500	720	218	292	4600	10300
	231/500 CW33	1	3	-	-	500	830	264	588	7100	14300
	231/500 KCW33	1	3	H31/500	AH31/500	500	830	264	577	7100	14300
	241/500 CW33	1	4	-	-	500	830	325	727	8650	18300
	241/500 K30CW33	1	4	-	AH241/500	500	830	325	701	7710	15900
	232/500 CW33	2	3	-	-	500	920	336	985	9780	18300
	232/500 KCW33	2	3	H32/500	AH32/500	500	920	336	992	8770	16700
530	**239/530 CW33**	9	3	-	-	530	710	136	160	2850	6800
	239/530 KCW33	9	3	H39/530	AH39/530	530	710	136	152	2850	6800
	230/530 CW33	0	3	-	-	530	780	185	321	4400	9500
	230/530 KCW33	0	3	H30/530	AH30/530	530	780	185	293	4400	9500
	240/530 CW33	0	4	-	-	530	780	250	415	6000	13700
	240/530 K30CW33	0	4	-	AH240/530	530	780	250	408	5430	12100
	231/530 CW33	1	3	-	-	530	870	272	643	7350	15300
	231/530 KCW33	1	3	H31/530	AH31/530	530	870	272	641	7170	14200
	241/530 CW33	1	4	-	-	530	870	335	1030	9500	20000
	241/530 K30CW33	1	4	-	AH241/530	530	870	335	784	8500	18000
	232/530 CW33	2	3	-	-	530	980	355	1200	11100	20400
	232/530 KCW33	2	3	H32/530	AH32/530	530	980	355	1200	10500	18900
560	**238/560 CW33**	8	3	-	-	560	680	90	70	1640	4470
	239/560 CW33	9	3	-	-	560	750	140	186	3100	7650
	239/560 KCW33	9	3	H39/560	AH39/560	560	750	140	175	3100	7650
	230/560 CW33	0	3	-	-	560	820	195	358	5100	11000
	230/560 KCW33	0	3	H30/560	AH30/560	560	820	195	350	5100	11000
	240/560 CW33	0	4	-	-	560	820	258	468	6400	14600
	240/560 K30CW33	0	4	-	AH240/560	560	820	258	460	5970	13300
	231/560 CW33	1	3	-	-	560	920	280	760	8150	16600
	231/560 KCW33	1	3	H31/560	AH31/560	560	920	280	740	7800	15500
	241/560 CW33	1	4	-	-	560	920	355	1250	10600	22400
	241/560 K30CW33	1	4	-	AH241/560	560	920	355	930	8920	18400
	232/560 CW33	2	3	-	-	560	1030	365	1350	11500	22000
	232/560 KCW33	2	3	H32/560	AH32/560	560	1030	365	1350	11200	20300
600	**239/600 CW33**	9	3	-	-	600	800	150	224	3450	8650
	239/600 KCW33	9	3	H39/600	AH39/600	600	800	150	210	3450	8650
	230/600 CW33	0	3	-	-	600	870	200	409	5700	12500
	230/600 KCW33	0	3	H30/600	AH30/600	600	870	200	400	5700	12500
	240/600 CW33	0	4	-	-	600	870	272	540	7100	16600

- warehouse - order - phone

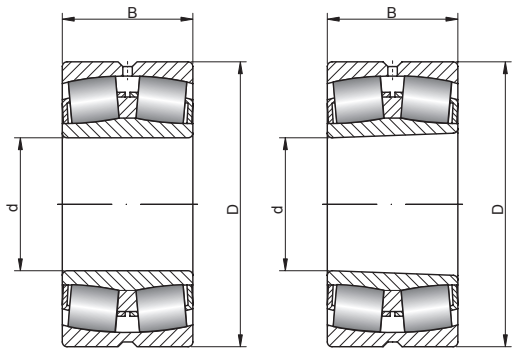

238.. 239.. 230.. 240..
231.. 241.. 222.. 232..
223.. 233..

K, K30
1:30 taper
240.. K30 241.. K30

Limiting speed [rpm]		Basic makes*					Bearing No.
grease	oil	-	M	TV	C3	C4	
380	480	✓	✓	✓	✓	✓	**23096 CW33**
380	480	✓	✓	✓	✓	✓	**23096 KCW33**
340	430	✓	✓	✓	✓	✓	**24096 CW33**
340	430	✓	✓	✓	✓	✓	**24096 K30CW33**
300	380	✓	✓	✓	✓	✓	**23196 CW33**
300	380	✓	✓	✓	✓	✓	**23196 KCW33**
150	190	✓	✓	✓	✓	✓	**24196 CW33**
150	190	✓	✓	✓	✓	✓	**24196 K30CW33**
260	340	✓	✓	✓	✓	✓	**23296 CW33**
260	340	✓	✓	✓	✓	✓	**23296 KCW33**
400	500	✓	✓	✓	✓	✓	**239/500 CW33**
400	500	✓	✓	✓	✓	✓	**239/500 KCW33**
310	410	✓	✓	✓	✓	✓	**230/500 CW33**
310	410	✓	✓	✓	✓	✓	**230/500 KCW33**
310	410	✓	✓	✓	✓	✓	**240/500 CW33**
310	410	✓	✓	✓	✓	✓	**240/500 K30CW33**
260	350	✓	✓	✓	✓	✓	**231/500 CW33**
260	350	✓	✓	✓	✓	✓	**231/500 KCW33**
140	180	✓	✓	✓	✓	✓	**241/500 CW33**
140	180	✓	✓	✓	✓	✓	**241/500 K30CW33**
240	320	✓	✓	✓	✓	✓	**232/500 CW33**
230	310	✓	✓	✓	✓	✓	**232/500 KCW33**
360	450	✓	✓	✓	✓	✓	**239/530 CW33**
360	450	✓	✓	✓	✓	✓	**239/530 KCW33**
280	370	✓	✓	✓	✓	✓	**230/530 CW33**
280	370	✓	✓	✓	✓	✓	**230/530 KCW33**
280	370	✓	✓	✓	✓	✓	**240/530 CW33**
280	370	✓	✓	✓	✓	✓	**240/530 K30CW33**
235	315	✓	✓	✓	✓	✓	**231/530 CW33**
235	315	✓	✓	✓	✓	✓	**231/530 KCW33**
130	165	✓	✓	✓	✓	✓	**241/530 CW33**
130	165	✓	✓	✓	✓	✓	**241/530 K30CW33**
220	300	✓	✓	✓	✓	✓	**232/530 CW33**
220	300	✓	✓	✓	✓	✓	**232/530 KCW33**
360	450	✓	✓	✓	✓	✓	**238/560 CW33**
340	430	✓	✓	✓	✓	✓	**239/560 CW33**
340	430	✓	✓	✓	✓	✓	**239/560 KCW33**
265	355	✓	✓	✓	✓	✓	**230/560 CW33**
265	355	✓	✓	✓	✓	✓	**230/560 KCW33**
265	355	✓	✓	✓	✓	✓	**240/560 CW33**
265	355	✓	✓	✓	✓	✓	**240/560 K30CW33**
225	305	✓	✓	✓	✓	✓	**231/560 CW33**
225	305	✓	✓	✓	✓	✓	**231/560 KCW33**
120	155	✓	✓	✓	✓	✓	**241/560 CW33**
120	155	✓	✓	✓	✓	✓	**241/560 K30CW33**
200	280	✓	✓	✓	✓	✓	**232/560 CW33**
200	280	✓	✓	✓	✓	✓	**232/560 KCW33**
320	400	✓	✓	✓	✓	✓	**239/600 CW33**
320	400	✓	✓	✓	✓	✓	**239/600 KCW33**
250	330	✓	✓	✓	✓	✓	**230/600 CW33**
250	330	✓	✓	✓	✓	✓	**230/600 KCW33**
250	330	✓	✓	✓	✓	✓	**240/600 CW33**

* Other products also available

https://nppnovoteh.com

7. SPHERICAL ROLLER BEARINGS

7.1. Single-row and double-row spherical roller bearings



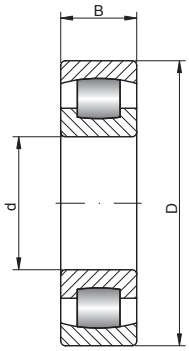

202.. 203..

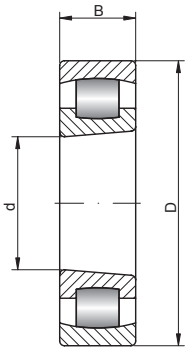

202.. K 203.. K

600 – 800 mm

d [mm]	Bearing No.	Series		Sleeve No.		Dimensions [mm]			Weight [kg]	Basic load ratings [kN]	
		SD	SB	H..	AH..	d	D	B		dyn. C	stat. C_0
600 cont.	**240/600 K30CW33**	0	4	-	AH240/600	600	870	272	538	6660	15500
	231/600 CW33	1	3	-	-	600	980	300	929	9000	19300
	231/600 KCW33	1	3	H31/600	AH31/600	600	980	300	888	9040	18400
	241/600 CW33	1	4	-	-	600	980	375	1180	11600	26000
	241/600 K30CW33	1	4	-	AH241/600	600	980	375	1100	10200	21600
	232/600 CW33	2	3	-	-	600	1090	388	1600	13100	25500
	232/600 KCW33	2	3	H32/600	AH32/600	600	1090	388	1590	12800	24000
630	**239/630 CW33**	9	3	-	-	630	850	165	292	4050	9800
	239/630 KCW33	9	3	H39/630	AH39/630	630	850	165	281	4050	9800
	230/630 CW33	0	3	-	-	630	920	212	514	6300	13700
	230/630 KCW33	0	3	H30/630	AH30/630	630	920	212	488	6300	13700
	240/630 CW33	0	4	-	-	630	920	290	653	8000	19000
	240/630 K30CW33	0	4	-	AH240/630	630	920	290	650	7410	17200
	231/630 CW33	1	3	-	-	630	1030	315	1070	9610	19500
	231/630 KCW33	1	3	H31/630	AH31/630	630	1030	315	1040	9610	19500
	241/630 CW33	1	4	-	-	630	1030	400	1360	12900	29000
	241/630 K30CW33	1	4	-	AH241/630	630	1030	400	1310	11600	25000
	232/630 CW33	2	3	-	-	630	1150	412	1880	14400	27100
	232/630 KCW33	2	3	H32/630	AH32/630	630	1150	412	1880	14400	27100
670	**239/670 CW33**	9	3	-	-	670	900	170	323	4300	10600
	239/670 KCW33	9	3	H39/670	AH39/670	670	900	170	316	4300	10600
	230/670 CW33	0	3	-	-	670	980	230	600	7200	16000
	230/670 KCW33	0	3	H30/670	AH30/670	670	980	230	590	7200	16000
	240/670 CW33	0	4	-	-	670	980	308	796	8230	19300
	240/670 K30CW33	0	4	-	AH240/670	670	980	308	783	8230	19300
	231/670 CW33	1	3	-	-	670	1090	336	1270	10600	21800
	231/670 KCW33	1	3	H31/670	AH31/670	670	1090	336	1240	10600	21800
	241/670 CW33	1	4	-	-	670	1090	412	2010	14000	31500
	241/670 K30CW33	1	4	-	AH241/670	670	1090	412	1500	12100	25900
710	**239/710 CW33**	9	3	-	-	710	950	180	355	4800	12000
	239/710 KCW33	9	3	H39/710	AH39/710	710	950	180	347	4800	12000
	230/710 CW33	0	3	-	-	710	1030	236	674	7650	17000
	230/710 KCW33	0	3	H30/710	AH30/710	710	1030	236	652	7650	17000
	240/710 CW33	0	4	-	-	710	1030	315	873	9500	22800
	240/710 K30CW33	0	4	-	AH240/710	710	1030	315	872	9050	21500
	231/710 CW33	1	3	-	-	710	1150	345	1440	11800	24800
	231/710 KCW33	1	3	H31/710	AH31/710	710	1150	345	1400	11800	24800
	241/710 CW33	1	4	-	-	710	1150	438	1830	15600	35500
	241/710 K30CW33	1	4	-	AH241/710	710	1150	438	1760	14400	31900
750	**239/750 CW33**	9	3	-	-	750	1000	185	426	5200	12900
	239/750 KCW33	9	3	H39/750	AH39/750	750	1000	185	418	5200	12900
	230/750 CW33	0	3	-	-	750	1090	250	806	8500	19000
	230/750 KCW33	0	3	H30/750	AH30/750	750	1090	250	783	8500	19000
	240/750 CW33	0	4	-	-	750	1090	335	1070	10800	26000
	240/750 K30CW33	0	4	-	AH240/750	750	1090	335	1040	9550	23000
	231/750 CW33	1	3	-	-	750	1220	365	1720	13300	28000
	231/750 KCW33	1	3	H31/750	AH31/750	750	1220	365	1670	13300	28000
800	**239/800 CW33**	9	3	-	-	800	1060	195	506	5850	15000
	239/800 KCW33	9	3	H39/800	AH39/800	800	1060	195	490	5850	15000
	230/800 CW33	0	3	-	-	800	1150	258	899	9300	21200
	230/800 KCW33	0	3	H30/800	AH30/800	800	1150	258	900	9300	21200

- warehouse - order - phone

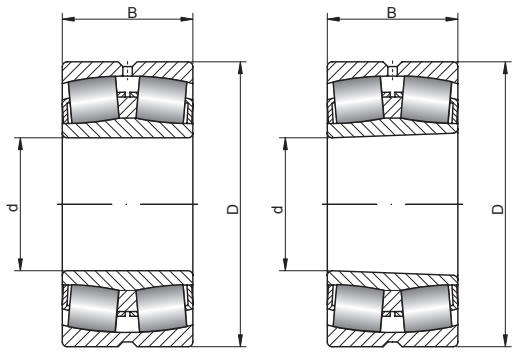

238.. 239.. 230.. 240..
231.. 241.. 222.. 232..
223.. 233..

K, K30
1:30 taper
240.. K30 241.. K30

Limiting speed [rpm]		Basic makes*					Bearing No.
grease	oil	-	M	TV	C3	C4	
250	330						**240/600 K30CW33**
210	280						**231/600 CW33**
210	280						**231/600 KCW33**
115	145						**241/600 CW33**
115	145						**241/600 K30CW33**
190	260						**232/600 CW33**
190	260						**232/600 KCW33**
280	360						**239/630 CW33**
280	360						**239/630 KCW33**
220	300						**230/630 CW33**
220	300						**230/630 KCW33**
220	300						**240/630 CW33**
220	300						**240/630 K30CW33**
185	255						**231/630 CW33**
185	255						**231/630 KCW33**
100	130						**241/630 CW33**
100	130						**241/630 K30CW33**
180	240						**232/630 CW33**
180	240						**232/630 KCW33**
260	340						**239/670 CW33**
260	340						**239/670 KCW33**
205	280						**230/670 CW33**
205	280						**230/670 KCW33**
205	280						**240/670 CW33**
205	280						**240/670 K30CW33**
170	240						**231/670 CW33**
170	240						**231/670 KCW33**
95	125						**241/670 CW33**
95	125						**241/670 K30CW33**
240	320						**239/710 CW33**
240	320						**239/710 KCW33**
190	265						**230/710 CW33**
190	265						**230/710 KCW33**
190	265						**240/710 CW33**
190	265						**240/710 K30CW33**
160	225						**231/710 CW33**
160	225						**231/710 KCW33**
85	120						**241/710 CW33**
85	120						**241/710 K30CW33**
220	300						**239/750 CW33**
220	300						**239/750 KCW33**
175	250						**230/750 CW33**
175	250						**230/750 KCW33**
175	250						**240/750 CW33**
175	250						**240/750 K30CW33**
145	210						**231/750 CW33**
145	210						**231/750 KCW33**
200	280						**239/800 CW33**
200	280						**239/800 KCW33**
155	230						**230/800 CW33**
155	230						**230/800 KCW33**

* Other products also available



https://nppnovoteh.com

7. SPHERICAL ROLLER BEARINGS

7.1. Single-row and double-row spherical roller bearings



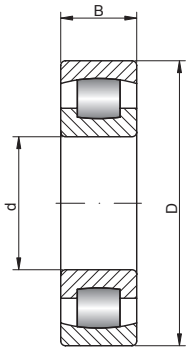

202.. 203..

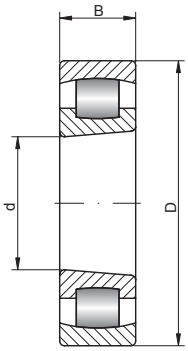

202.. K 203.. K

800 – 1250 mm

d [mm]	Bearing No.	Series		Sleeve No.		Dimensions [mm]			Weight [kg]	Basic load ratings [kN]	
		SD	SB	H..	AH..	d	D	B		dyn. C	stat. C_0
800 cont.	**240/800 CW33**	0	4	-	-	800	1150	345	1200	11600	28500
	240/800 K30CW33	0	4	-	AH240/800	800	1150	345	1170	11200	26900
	231/800 CW33	1	3	-	-	800	1280	375	1910	13800	29400
	231/800 KCW33	1	3	H31/800	AH31/800	800	1280	375	1850	13800	29400
850	**239/850 CW33**	9	3	-	-	850	1120	200	579	6300	16300
	239/850 KCW33	9	3	H39/850	AH39/850	850	1120	200	563	6300	16300
	230/850 CW33	0	3	-	-	850	1220	272	1080	9570	22600
	230/850 KCW33	0	3	H30/850	AH30/850	850	1220	272	1050	9570	22600
	240/850 CW33	0	4	-	-	850	1220	365	1420	12900	32000
	240/850 K30CW33	0	4	-	AH240/850	850	1220	365	1390	12000	30000
	231/850 CW33	1	3	-	-	850	1360	400	2300	15600	33600
	231/850 KCW33	1	3	H31/850	AH31/850	850	1360	400	2230	15600	33600
900	**239/900 CW33**	9	3	-	-	900	1180	206	653	6550	17300
	239/900 KCW33	9	3	H39/900	AH39/900	900	1180	206	630	6550	17300
	230/900 CW33	0	3	-	-	900	1280	280	1200	10300	24800
	230/900 KCW33	0	3	H30/900	AH30/900	900	1280	280	1160	10300	24800
	240/900 CW33	0	4	-	-	900	1280	375	1570	13200	33400
	240/900 K30CW33	0	4	-	AH240/900	900	1280	375	1550	13200	33400
	231/900 CW33	1	3	-	-	900	1420	412	2530	16800	37100
	231/900 KCW33	1	3	H31/900	AH31/900	900	1420	412	2450	16800	37100
950	**239/950 CW33**	9	3	-	-	950	1250	224	755	7790	20700
	239/950 KCW33	9	3	H39/950	-	950	1250	224	731	7790	20700
	230/950 CW33	0	3	-	-	950	1360	300	1470	11500	27700
	230/950 KCW33	0	3	H30/950	AH30/950	950	1360	300	1420	11500	27700
	240/950 CW33	0	4	-	-	950	1360	412	1970	15200	38300
	240/950 K30CW33	0	4	-	AH240/950	950	1360	412	1940	15200	38300
1000	**238/1000 CW33**	8	3	-	-	1000	1220	165	410	4640	13600
	239/1000 CW33	9	3	-	-	1000	1320	236	895	8240	21500
	239/1000 KCW33	9	3	H39/1000	-	1000	1320	236	866	8240	21500
	230/1000 CW33	0	3	-	-	1000	1420	308	1620	12300	30000
	230/1000 KCW33	0	3	H30/1000	AH30/1000	1000	1420	308	1570	12300	30000
	240/1000 CW33	0	4	-	-	1000	1420	412	2120	16200	41800
	240/1000 K30CW33	0	4	-	AH240/1000	1000	1420	412	2090	16200	41800
1060	**238/1060 CW33**	8	3	-	-	1060	1280	165	440	4790	14500
	239/1060 CW33	9	3	-	-	1060	1400	250	1040	9500	25300
	239/1060 KCW33	9	3	H39/1060	-	1060	1400	250	1010	9500	25300
	240/1060 CW33	0	4	-	-	1060	1500	438	2490	17500	45300
	240/1060 K30CW33	0	4	-	AH240/1060	1060	1500	438	2450	17500	45300
1120	**239/1120 CW33**	9	3	-	-	1120	1460	250	1100	9520	25700
	239/1120 KCW33	9	3	H39/1120	-	1120	1460	250	1060	9520	25700
	240/1120 CW33	0	4	-	-	1120	1580	462	2900	19600	51000
	240/1120 K30CW33	0	4	-	AH240/1120	1120	1580	462	2860	19600	51000
1180	**239/1180 CW33**	9	3	-	-	1180	1540	272	1330	10900	29800
	239/1180 KCW33	9	3	H39/1180	-	1180	1540	272	1280	10900	29800
1250	**239/1250 CW33**	9	3	-	-	1250	1630	280	1530	11500	31500
	239/1250 KCW33	9	3	H39/1250	-	1250	1630	280	1480	11500	31500

- warehouse - order - phone

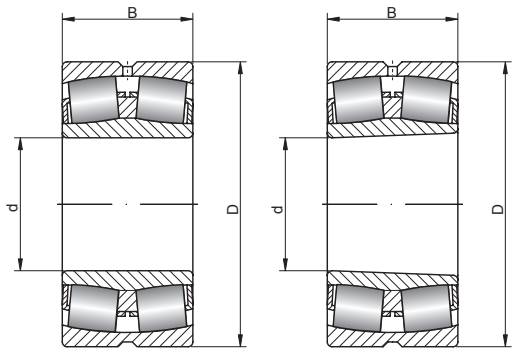

238.. 239.. 230.. 240..
231.. 241.. 222.. 232..
223.. 233..

K, K30
1:30 taper
240.. K30 241.. K30

Limiting speed [rpm]		Basic makes*					Bearing No.
grease	oil	-	M	TV	C3	C4	
155	230	✓	✓	✓	✓	✓	**240/800 CW33**
155	230	✓	✓	✓	✓	✓	**240/800 K30CW33**
130	200	✓	✓	✓	✓	✓	**231/800 CW33**
130	200	✓	✓	✓	✓	✓	**231/800 KCW33**
190	260	✓	✓	✓	✓	✓	**239/850 CW33**
190	260	✓	✓	✓	✓	✓	**239/850 KCW33**
150	215	✓	✓	✓	✓	✓	**230/850 CW33**
150	215	✓	✓	✓	✓	✓	**230/850 KCW33**
150	215	✓	✓	✓	✓	✓	**240/850 CW33**
150	215	✓	✓	✓	✓	✓	**240/850 K30CW33**
125	185	✓	✓	✓	✓	✓	**231/850 CW33**
125	185	✓	✓	✓	✓	✓	**231/850 KCW33**
180	250	✓	✓	✓	✓	✓	**239/900 CW33**
180	250	✓	✓	✓	✓	✓	**239/900 KCW33**
140	205	✓	✓	✓	✓	✓	**230/900 CW33**
140	205	✓	✓	✓	✓	✓	**230/900 KCW33**
140	205	✓	✓	✓	✓	✓	**240/900 CW33**
140	205	✓	✓	✓	✓	✓	**240/900 K30CW33**
120	175	✓	✓	✓	✓	✓	**231/900 CW33**
120	175	✓	✓	✓	✓	✓	**231/900 KCW33**
170	240	✓	✓	✓	✓	✓	**239/950 CW33**
170	240	✓	✓	✓	✓	✓	**239/950 KCW33**
135	200	✓	✓	✓	✓	✓	**230/950 CW33**
135	200	✓	✓	✓	✓	✓	**230/950 KCW33**
135	200	✓	✓	✓	✓	✓	**240/950 CW33**
135	200	✓	✓	✓	✓	✓	**240/950 K30CW33**
180	250	✓	✓	✓	✓	✓	**238/1000 CW33**
160	230	✓	✓	✓	✓	✓	**239/1000 CW33**
160	230	✓	✓	✓	✓	✓	**239/1000 KCW33**
125	190	✓	✓	✓	✓	✓	**230/1000 CW33**
125	190	✓	✓	✓	✓	✓	**230/1000 KCW33**
125	190	✓	✓	✓	✓	✓	**240/1000 CW33**
125	190	✓	✓	✓	✓	✓	**240/1000 K30CW33**
170	240	✓	✓	✓	✓	✓	**238/1060 CW33**
150	220	✓	✓	✓	✓	✓	**239/1060 CW33**
150	220	✓	✓	✓	✓	✓	**239/1060 KCW33**
120	185	✓	✓	✓	✓	✓	**240/1060 CW33**
120	185	✓	✓	✓	✓	✓	**240/1060 K30CW33**
130	200	✓	✓	✓	✓	✓	**239/1120 CW33**
130	200	✓	✓	✓	✓	✓	**239/1120 KCW33**
105	165	✓	✓	✓	✓	✓	**240/1120 CW33**
105	165	✓	✓	✓	✓	✓	**240/1120 K30CW33**
110	180	✓	✓	✓	✓	✓	**239/1180 CW33**
110	180	✓	✓	✓	✓	✓	**239/1180 KCW33**
100	160	✓	✓	✓	✓	✓	**239/1250 CW33**
100	160	✓	✓	✓	✓	✓	**239/1250 KCW33**

* Other products also available

https://nppnovoteh.com

7. SPHERICAL ROLLER BEARINGS

7.2. Spherical roller bearings with adapter sleeve



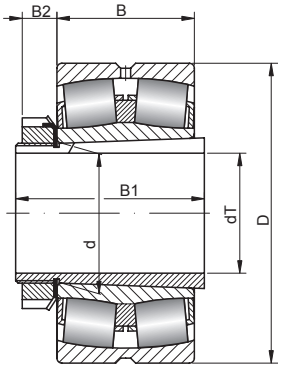

20 – 70 mm

Shaft [mm]	Bearing No.	Series		Sleeve No.	Dimensions [mm]						Weight [kg]
		SD	SB		d	dT	D	B	B1	B2	
20	**20205 KC**	2	0	H205	25	20	52	15	26	9	0,145
	22205 KCW33	2	2	H305	25	20	52	18	29	8	0,163
25	**20206 KC**	2	0	H206	30	25	62	16	27	9	0,228
	22206 KCW33	2	2	H306	30	25	62	20	31	8	0,26
	21306 KCW33	3	0	H306	30	25	72	19	30	8	0,38
30	**20207 KC**	2	0	H207	35	30	72	17	29	10	0,301
	22207 KCW33	2	2	H307	35	30	72	23	35	9	0,405
	21307 KCW33	3	0	H307	35	30	80	21	35	9	0,502
35	**20208 KC**	2	0	H208	40	35	80	18	31	11	0,389
	22208 KCW33	2	2	H308	40	35	80	23	36	10	0,487
	21308 KCW33	3	0	H308	40	35	90	23	36	10	0,706
	22308 KCW33	3	2	H2308	40	35	90	33	46	10	0,984
40	**20209 KC**	2	0	H209	45	40	85	19	33	12	0,483
	22209 KCW33	2	2	H309	45	40	85	23	39	11	0,57
	21309 KCW33	3	0	H309	45	40	100	25	39	11	0,947
	22309 KCW33	3	2	H2309	45	40	100	36	50	11	1,36
45	**20210 KC**	2	0	H210	50	45	90	20	35	13	0,49
	22210 KCW33	2	2	H310	50	45	90	23	42	12	0,582
	21310 KCW33	3	0	H310	50	45	110	27	42	12	1,21
	22310 KCW33	3	2	H2310	50	45	110	40	55	12	1,7
50	**20211 KC**	2	0	H211	55	50	100	21	37	14	0,78
	22211 KCW33	2	2	H311	55	50	100	25	45	12	0,8
	20311 KC	3	0	H311	55	50	120	29	45	14	1,64
	21311 KCW33	3	0	H311	55	50	120	29	45	12	1,55
	22311 KCW33	3	2	H2311	55	50	120	43	59	12	2,02
55	**20212 KC**	2	0	H212	60	55	110	22	38	14	0,93
	22212 KCW33	2	2	H312	60	55	110	31	47	13	1
	20312 KC	3	0	H312	60	55	130	31	47	14	2
	21312 KCW33	3	0	H312	60	55	130	31	47	13	1,93
	22312 KCW33	3	2	H2312	60	55	130	46	62	13	2,8
60	**20213 KC**	2	0	H213	65	60	120	23	40	15	1,19
	22213 KCW33	2	2	H313	65	60	120	31	50	14	1,27
	22214 KCW33	2	2	H314	70	60	125	31	52	14	1,46
	20313 KC	3	0	H313	65	60	140	33	50	15	2,53
	21313 KCW33	3	0	H313	65	60	140	33	50	14	2,42
	22313 KCW33	3	2	H2313	65	60	140	48	65	14	3,57
	21314 KCW33	3	0	H314	70	60	150	35	52	14	2,95
	22314 KCW33	3	2	H2314	70	60	150	51	68	14	4,25
65	**20215 KC**	2	0	H215	75	65	130	25	43	16	1,4
	22215 KCW33	2	2	H315	75	65	130	31	55	15	1,65
	21315 KCW33	3	0	H315	75	65	160	37	55	15	3,55
	22315 KCW33	3	2	H2315	75	65	160	55	73	15	5,01
70	**20216 KC**	2	0	H216	80	70	140	26	46	18	1,72
	22216 KCW33	2	2	H316	80	70	140	33	59	17	1,97
	21316 KCW33	3	0	H316	80	70	170	39	59	17	4,23
	22316 KCW33	3	2	H2316	80	70	170	58	78	17	5,95

- warehouse - order - phone

https://nppnovoteh.com

Basic load ratings [kN]		Limiting speed [rpm]		Basic makes*					Bearing No.
dyn. C	stat. C_0	grease	oil	-	M	TV	C3	C4	
24	25	5000	6500	●	●	●	●	●	**20205 KC**
43,1	44	8500	11000	●	◴	●	◴	●	**22205 KCW33**
27,5	28,5	4000	5500	●	●	●	●	●	**20206 KC**
48,9	52	7500	9500	●	◴	●	◴	●	**22206 KCW33**
55,2	61	6000	7500	●	●	●	◴	●	**21306 KCW33**
40,5	43	3500	4750	●	●	●	●	●	**20207 KC**
67,3	73,5	6300	8000	●	◴	●	◴	●	**22207 KCW33**
65,6	72	5300	6700	●	●	●	◴	●	**21307 KCW33**
49	53	3250	4250	●	●	●	●	●	**20208 KC**
73,6	81,5	6000	7500	●	◴	●	◴	●	**22208 KCW33**
82,8	98	4500	5600	●	●	●	◴	●	**21308 KCW33**
115	122	4500	5600	●	●	●	◴	●	**22308 KCW33**
52	57	3000	4000	●	●	●	●	●	**20209 KC**
77,1	88	5300	6700	●	◴	●	◴	●	**22209 KCW33**
101	114	4300	5300	●	●	●	◴	●	**21309 KCW33**
138	160	3800	4800	●	●	●	◴	●	**22309 KCW33**
58,5	68	2750	3500	●	●	●	●	●	**20210 KC**
84,5	100	5000	6300	●	◴	●	◴	●	**22210 KCW33**
120	140	3600	4800	●	●	●	◴	●	**21310 KCW33**
176	200	3400	4300	●	●	●	◴	●	**22310 KCW33**
73,5	85	2500	3250	●	●	●	●	●	**20211 KC**
99,5	118	4500	5600	●	◴	●	◴	●	**22211 KCW33**
120	137	2250	3000	●	●	●	●	●	**20311 KC**
138	163	3400	4300	●	●	●	◴	●	**21311 KCW33**
199	232	3200	4000	●	●	●	◴	●	**22311 KCW33**
85	100	2500	3250	●	●	●	●	●	**20212 KC**
122	146	4000	5000	●	◴	●	◴	●	**22212 KCW33**
146	170	2000	2750	●	●	●	●	●	**20312 KC**
161	200	3000	3800	●	◴	●	◴	●	**21312 KCW33**
235	280	3000	3800	●	◴	●	◴	●	**22312 KCW33**
95	116	2250	3000	●	●	●	●	●	**20213 KC**
176	216	3800	4800	●	◴	●	◴	●	**22213 KCW33**
148	186	3600	4500	●	◴	●	◴	●	**22214 KCW33**
170	196	2000	2750	●	●	●	●	●	**20313 KC**
184	240	2800	3600	●	◴	●	◴	●	**21313 KCW33**
253	300	2600	3400	●	◴	●	◴	●	**22313 KCW33**
207	260	2600	3400	●	◴	●	◴	●	**21314 KCW33**
311	380	2400	3200	●	◴	●	◴	●	**22314 KCW33**
112	143	2000	2750	●	●	●	●	●	**20215 KC**
158	208	3400	4300	●	◴	●	◴	●	**22215 KCW33**
235	300	2400	3200	●	◴	●	◴	●	**21315 KCW33**
345	430	2200	3000	●	◴	●	◴	●	**22315 KCW33**
125	163	2000	2500	●	●	●	●	●	**20216 KC**
176	228	3200	4000	●	◴	●	◴	●	**22216 KCW33**
258	335	2200	3000	●	◴	●	◴	●	**21316 KCW33**
374	455	2000	2800	●	◴	●	◴	●	**22316 KCW33**

* Other products also available



https://nppnovoteh.com

7. SPHERICAL ROLLER BEARINGS

7.2. Spherical roller bearings with adapter sleeve



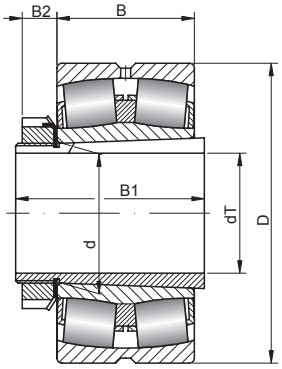

75 – 135 mm

Shaft [mm]	Bearing No.	Series		Sleeve No.	Dimensions [mm]						Weight [kg]
		SD	SB		d	dT	D	B	B1	B2	
75	**20217 KC**	2	0	H217	85	75	150	28	50	19	2,14
	22217 KCW33	2	2	H317	85	75	150	36	63	18	2,49
	21317 KCW33	3	0	H317	85	75	180	41	63	18	4,93
	22317 KCW33	3	2	H2317	85	75	180	60	82	18	6,84
80	**20218 KC**	2	0	H218	90	80	160	30	52	19	2,63
	22218 KCW33	2	2	H318	90	80	160	40	65	18	3,2
	23218 KCW33	2	3	H2318	90	80	160	52.4	86	18	4,2
	20318 KC	3	0	H318	90	80	190	43	65	19	6,03
	21318 KCW33	3	0	H318	90	80	190	43	65	18	5,74
	22318 KCW33	3	2	H2318	90	80	190	64	86	18	8,08
85	**22219 KCW33**	2	2	H319	95	85	170	43	68	19	3,89
	21319 KCW33	3	0	H319	95	85	200	45	68	19	6,63
	22319 KCW33	3	2	H2319	95	85	200	67	90	19	9,21
90	**23120 KCW33**	1	3	H3120	100	90	165	52	76	20	4,2
	20220 KC	2	0	H220	100	90	180	34	58	21	3,81
	22220 KCW33	2	2	H320	100	90	180	46	71	20	4,72
	23220 KCW33	2	3	H2320	100	90	180	60.3	97	20	6,2
	20320 KC	3	0	H320	100	90	215	47	71	21	8,46
	21320 KCW33	3	0	H320	100	90	215	47	71	20	8,19
	22320 KCW33	3	2	H2320	100	90	215	73	97	20	11,7
100	**23122 KCW33**	1	3	H3122	110	100	180	56	81	21	5,13
	20222 KC	2	0	H222	110	100	200	38	63	21	5,34
	22222 KCW33	2	2	H322	110	100	200	53	77	21	7,1
	23222 KCW33	2	3	H2322	110	100	200	70	105	21	9,1
	21322 KCW33	3	0	H322	110	100	240	50	77	21	11,1
	22322 KCW33	3	2	H2322	110	100	240	80	105	21	17,4
110	**23024 KCW33**	0	3	H3024	120	110	180	46	72	22	4,22
	23124 KCW33	1	3	H3124	120	110	200	62	88	22	7,3
	20224 KC	2	0	H3024	120	110	215	40	72	22	6,41
	22224 KCW33	2	2	H3124	120	110	215	58	88	22	8,72
	23224 KCW33	2	3	H2324	120	110	215	76	112	22	11
	22324 KCW33	3	2	H2324	120	110	260	86	112	22	21
115	**23026 KCW33**	0	3	H3026	130	115	200	52	80	23	5,6
	23126 KCW33	1	3	H3126	130	115	210	64	92	23	8,1
	20226 KC	2	0	H3026	130	115	230	40	80	23	7,19
	22226 KCW33	2	2	H3126	130	115	230	64	92	23	10,4
	23226 KCW33	2	3	H2326	130	115	230	80	121	23	13
	22326 KCW33	3	2	H2326	130	115	280	93	121	23	26,7
125	**23028 KCW33**	0	3	H3028	140	125	210	53	82	24	6
	23128 KCW33	1	3	H3128	140	125	225	68	97	24	9,8
	20228 KC	2	0	H3028	140	125	250	42	82	24	9
	22228 KCW33	2	2	H3128	140	125	250	68	97	24	13,5
	23228 KCW33	2	3	H2328	140	125	250	88	131	24	17,7
	22328 KCW33	3	2	H2328	140	125	300	102	131	24	34
135	**23030 KCW33**	0	3	H3030	150	135	225	56	87	26	7
	23130 KCW33	1	3	H3130	150	135	250	80	111	26	15
	20230 KC	2	0	H3030	150	135	270	45	87	26	11,5
	22230 KCW33	2	2	H3130	150	135	270	73	111	26	17

- warehouse - order - phone

Basic load ratings [kN]		Limiting speed [rpm]		Basic makes*					Bearing No.
dyn. C	stat. C_0	grease	oil	-	M	TV	C3	C4	
156	200	1750	2500	●	●	●	●	●	**20217 KC**
210	270	3000	3800	■	◴	●	◴	●	**22217 KCW33**
293	375	2000	2800	■	◴	●	◴	●	**21317 KCW33**
420	520	1900	2600	■	◴	●	◴	●	**22317 KCW33**
173	220	1500	2000	●	●	●	●	●	**20218 KC**
253	340	2600	3400	■	◴	●	◴	●	**22218 KCW33**
311	440	1900	2600	■	◴	●	◴	●	**23218 KCW33**
300	360	1500	2000	●	●	●	●	●	**20318 KC**
322	425	1900	2600	■	◴	●	◴	●	**21318 KCW33**
477	610	1800	2400	■	◴	●	◴	●	**22318 KCW33**
282	375	2400	3200	■	◴	●	◴	●	**22219 KCW33**
351	480	1800	2400	■	◴	●	◴	●	**21319 KCW33**
518	670	1800	2400	■	◴	●	◴	●	**22319 KCW33**
322	490	2000	2800	■	◴	●	◴	●	**23120 KCW33**
224	290	1500	2000	●	●	●	●	●	**20220 KC**
311	415	2200	3000	■	◴	●	◴	●	**22220 KCW33**
414	600	1700	2200	■	◴	●	◴	●	**23220 KCW33**
365	440	1250	1750	●	●	●	●	●	**20320 KC**
385	530	1700	2200	■	◴	●	◴	●	**21320 KCW33**
610	800	1700	2200	■	◴	●	◴	●	**22320 KCW33**
374	585	1900	2600	■	◴	●	◴	●	**23122 KCW33**
285	375	1250	1750	●	●	●	●	●	**20222 KC**
408	560	2000	2800	■	◴	●	◴	●	**22222 KCW33**
518	765	1600	2000	■	◴	●	◴	●	**23222 KCW33**
460	630	1600	2000	■	◴	●	◴	●	**21322 KCW33**
725	965	1600	2000	■	◴	●	◴	●	**22322 KCW33**
305	510	2000	2800	■	◴	●	◴	◴	**23024 KCW33**
449	695	1800	2400	■	◴	●	◴	●	**23124 KCW33**
305	415	1250	1750	●	●	●	●	●	**20224 KC**
466	670	1900	2600	■	◴	●	◴	●	**22224 KCW33**
610	930	1500	1900	■	◴	●	◴	●	**23224 KCW33**
845	1120	1400	1800	■	◴	●	◴	●	**22324 KCW33**
374	610	1900	2600	■	◴	●	◴	◴	**23026 KCW33**
489	780	1700	2200	■	◴	●	◴	●	**23126 KCW33**
335	450	1250	1500	●	●	●	●	●	**20226 KC**
546	800	1800	2400	■	◴	●	◴	●	**22226 KCW33**
690	1060	1300	1700	■	◴	●	◴	●	**23226 KCW33**
978	1320	1300	1700	■	◴	●	◴	●	**22326 KCW33**
397	680	1800	2400	■	◴	●	◴	◴	**23028 KCW33**
546	900	1600	2000	■	◴	●	◴	●	**23128 KCW33**
390	530	1000	1500	●	●	●	●	●	**20228 KC**
610	900	1700	2200	■	◴	●	◴	●	**22228 KCW33**
799	1250	1200	1600	■	◴	●	◴	●	**23228 KCW33**
1130	1560	1100	1500	■	◴	●	◴	●	**22328 KCW33**
437	750	1700	2200	■	◴	●	◴	◴	**23030 KCW33**
725	1200	1400	1800	■	◴	●	◴	●	**23130 KCW33**
430	610	1000	1250	●	●	●	●	●	**20230 KC**
736	1080	1600	2000	■	◴	●	◴	●	**22230 KCW33**

* Other products also available



https://nppnovoteh.com

7. SPHERICAL ROLLER BEARINGS

7.2. Spherical roller bearings with adapter sleeve



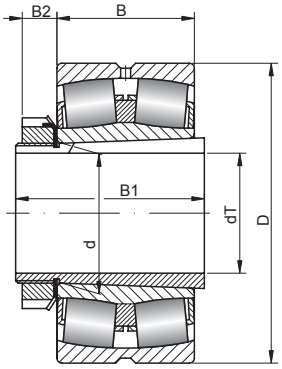

135 – 240 mm

Shaft [mm]	Bearing No.	Series		Sleeve No.	Dimensions [mm]						Weight [kg]
		SD	SB		d	dT	D	B	B1	B2	
135 cont.	**23230 KCW33**	2	3	H2330	150	135	270	96	139	26	22
	22330 KCW33	3	2	H2330	150	135	320	108	139	26	40,6
140	**23032 KCW33**	0	3	H3032	160	140	240	60	93	28	8
	23132 KCW33	1	3	H3132	160	140	270	86	119	28	19
	20232 KC	2	0	H3032	160	140	290	48	93	28	14,3
	22232 KCW33	2	2	H3132	160	140	290	80	119	28	22,5
	23232 KCW33	2	3	H2332	160	140	290	104	147	28	28,9
	22332 KCW33	3	2	H2332	160	140	340	114	147	28	50,5
150	**23034 KCW33**	0	3	H3034	170	150	260	67	101	29	12,1
	23134 KCW33	1	3	H3134	170	150	280	88	122	29	20,6
	22234 KCW33	2	2	H3134	170	150	310	86	122	29	26,3
	23234 KCW33	2	3	H2334	170	150	310	110	154	29	34,2
	22334 KCW33	3	2	H2334	170	150	360	120	154	29	58,2
160	**23936 KCW33**	9	3	H3936	180	160	250	52	87	30	7,7
	23036 KCW33	0	3	H3036	180	160	280	74	109	30	16,6
	23136 KCW33	1	3	H3136	180	160	300	96	131	30	26,8
	22236 KCW33	2	2	H3136	180	160	320	86	131	30	28,5
	23236 KCW33	2	3	H2336	180	160	320	112	161	30	38,6
	22336 KCW33	3	2	H2336	180	160	380	126	161	30	68,5
170	**23938 KCW33**	9	3	H3938	190	170	260	52	89	31	8,3
	23038 KCW33	0	3	H3038	190	170	290	75	112	31	16,9
	23138 KCW33	1	3	H3138	190	170	320	104	141	31	31,4
	22238 KCW33	2	2	H3138	190	170	340	92	141	31	37
	23238 KCW33	2	3	H2338	190	170	340	120	169	31	47,5
	22338 KCW33	3	2	H2338	190	170	400	132	169	31	79,4
180	**23940 KCW33**	9	3	H3940	200	180	280	60	98	32	12,3
	23040 KCW33	0	3	H3040	200	180	310	82	120	32	22,3
	23140 KCW33	1	3	H3140	200	180	340	112	150	32	41,6
	22240 KCW33	2	2	H3140	200	180	360	98	150	32	43,2
	23240 KCW33	2	3	H2340	200	180	360	128	176	32	57,6
	22340 KCW33	3	2	H2340	200	180	420	138	176	32	90,4
200	**23944 KCW33**	9	3	H3944	220	200	300	60	96	30	12,2
	23044 KCW33	0	3	H3044	220	200	340	90	126	30	30,2
	23144 KCW33	1	3	H3144	220	200	370	120	161	35	52,5
	22244 KCW33	2	2	H3144	220	200	400	108	161	35	59,6
	23244 KCW33	2	3	H2344	220	200	400	144	186	35	81,4
	22344 KCW33	3	2	H2344	220	200	460	145	186	35	117
220	**23948 KCW33**	9	3	H3948	240	220	320	60	101	34	13,5
	23048 KCW33	0	3	H3048	240	220	360	92	133	34	33
	23148 KCW33	1	3	H3148	240	220	400	128	172	37	65
	22248 KCW33	2	2	H3148	240	220	440	120	172	37	81,2
	23248 KCW33	2	3	H2348	240	220	440	160	199	37	108
	22348 KCW33	3	2	H2348	240	220	500	155	199	37	149
240	**23952 KCW33**	9	3	H3952	260	240	360	75	116	34	22,4
	23052 KCW33	0	3	H3052	260	240	400	104	145	34	47,9
	23152 KCW33	1	3	H3152	260	240	440	144	190	39	93
	22252 KCW33	2	2	H3152	260	240	480	130	190	39	108
	23252 KCW33	2	3	H2352	260	240	480	174	211	39	140

- warehouse - order - phone

Basic load ratings [kN]		Limiting speed [rpm]		Basic makes*					Bearing No.
dyn. C	stat. C_0	grease	oil	-	M	TV	C3	C4	
937	1460	1100	1500	●	◴	●	◴	●	**23230 KCW33**
1270	1760	1000	1400	●	◴	●	◴	●	**22330 KCW33**
506	880	1700	2200	●	◴	●	◴	◴	**23032 KCW33**
845	1370	1300	1700	●	◴	●	◴	●	**23132 KCW33**
500	720	1000	1250	●	●	●	●	●	**20232 KC**
863	1290	1500	1900	●	◴	●	◴	●	**22232 KCW33**
1070	1660	1000	1400	●	◴	●	◴	●	**23232 KCW33**
1380	1960	950	1300	●	◴	●	◴	●	**22332 KCW33**
621	1060	1600	2000	●	◴	●	◴	◴	**23034 KCW33**
897	1500	1200	1600	●	◴	●	◴	●	**23134 KCW33**
978	1460	1300	1700	●	◴	●	◴	●	**22234 KCW33**
1220	1930	950	1300	●	◴	●	◴	●	**23234 KCW33**
1540	2160	950	1300	●	◴	●	◴	●	**22334 KCW33**
431	830	1700	2200	●	◴	●	◴	●	**23936 KCW33**
725	1250	1400	1800	●	◴	●	◴	◴	**23036 KCW33**
1050	1760	1100	1500	●	◴	●	◴	●	**23136 KCW33**
1010	1560	1300	1700	●	◴	●	◴	●	**22236 KCW33**
1290	2120	900	1200	●	◴	●	◴	●	**23236 KCW33**
1730	2450	900	1200	●	◴	●	◴	●	**22336 KCW33**
414	800	1700	2200	●	◴	●	◴	●	**23938 KCW33**
753	1340	1300	1700	●	◴	●	◴	◴	**23038 KCW33**
1200	2080	1000	1400	●	◴	●	◴	●	**23138 KCW33**
1110	1700	1200	1600	●	◴	●	◴	●	**22238 KCW33**
1460	2400	850	1100	●	◴	●	◴	●	**23238 KCW33**
1870	2650	850	1100	●	◴	●	◴	●	**22338 KCW33**
546	1040	1600	2000	●	◴	●	◴	●	**23940 KCW33**
880	1530	1200	1600	●	◴	●	◴	◴	**23040 KCW33**
1380	2360	950	1300	●	◴	●	◴	●	**23140 KCW33**
1270	1930	1100	1500	●	◴	●	◴	●	**22240 KCW33**
1610	2700	850	1100	●	◴	●	◴	●	**23240 KCW33**
2020	2900	850	1100	●	◴	●	◴	●	**22340 KCW33**
546	1080	1500	1900	●	◴	●	◴	●	**23944 KCW33**
1050	1860	1100	1500	●	◴	●	◴	◴	**23044 KCW33**
1580	2750	900	1200	●	◴	●	◴	●	**23144 KCW33**
1520	2360	950	1300	●	◴	●	◴	●	**22244 KCW33**
2070	3450	750	950	●	◴	●	◴	●	**23244 KCW33**
2350	3450	750	950	●	◴	●	◴	●	**22344 KCW33**
564	1160	1300	1700	●	◴	●	◴	●	**23948 KCW33**
1130	2080	1000	1400	●	◴	●	◴	◴	**23048 KCW33**
1790	3200	850	1100	●	◴	●	◴	●	**23148 KCW33**
1910	3000	900	1200	●	◴	●	◴	●	**22248 KCW33**
2530	4300	670	850	●	◴	●	◴	●	**23248 KCW33**
2670	4000	670	850	●	◴	●	◴	●	**22348 KCW33**
880	1800	1100	1500	●	◴	●	◴	●	**23952 KCW33**
1400	2550	900	1200	●	◴	●	◴	◴	**23052 KCW33**
2220	3900	800	1000	●	●	●	●	●	**23152 KCW33**
2300	3550	850	1100	●	◴	●	◴	●	**22252 KCW33**
2820	4750	630	800	●	◴	●	◴	●	**23252 KCW33**

* Other products also available



https://nppnovoteh.com

7. SPHERICAL ROLLER BEARINGS

7.2. Spherical roller bearings with adapter sleeve



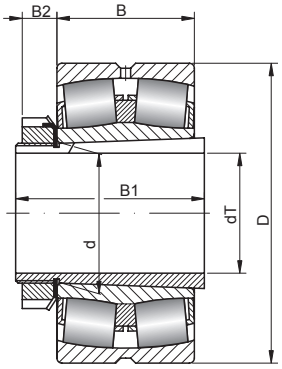

240 – 430 mm

Shaft [mm]	Bearing No.	Series		Sleeve No.	Dimensions [mm]						Weight [kg]
		SD	SB		d	dT	D	B	B1	B2	
240 cont.	**22352 KCW33**	3	2	H2352	260	240	540	165	211	39	181
260	**23956 KCW33**	9	3	H3956	280	260	380	75	121	38	25,1
	23056 KCW33	0	3	H3056	280	260	420	106	152	38	52,2
	23156 KCW33	1	3	H3156	280	260	460	146	195	41	96,4
	22256 KCW33	2	2	H3156	280	260	500	130	195	41	112
	23256 KCW33	2	3	H2356	280	260	500	176	224	41	152
	22356 KCW33	3	2	H2356	280	260	580	175	224	41	230
280	**23960 KCW33**	9	3	H3960	300	280	420	90	140	42	40,4
	23060 KCW33	0	3	H3060	300	280	460	118	168	42	72,3
	23160 KCW33	1	3	H3160	300	280	500	160	208	40	127
	22260 KCW33	2	2	H3160	300	280	540	140	208	40	140
	23260 KCW33	2	3	H3260	300	280	540	192	240	40	192
300	**23964 KCW33**	9	3	H3964	320	300	440	90	140	42	40,7
	23064 KCW33	0	3	H3064	320	300	480	121	171	42	77,8
	23164 KCW33	1	3	H3164	320	300	540	176	226	42	164
	22264 KCW33	2	2	H3164	320	300	580	150	226	42	171
	23264 KCW33	2	3	H3264	320	300	580	208	258	42	237
320	**23968 KCW33**	9	3	H3968	340	320	460	90	144	45	44
	23068 KCW33	0	3	H3068	340	320	520	133	187	45	104
	23168 KCW33	1	3	H3168	340	320	580	190	254	55	209
	23268 KCW33	2	3	H3268	340	320	620	224	288	55	299
340	**23972 KCW33**	9	3	H3972	360	340	480	90	144	45	45
	23072 KCW33	0	3	H3072	360	340	540	134	188	45	110
	23172 KCW33	1	3	H3172	360	340	600	192	259	58	228
	23272 KCW33	2	3	H3272	360	340	650	232	299	58	337
360	**23976 KCW33**	9	3	H3976	380	360	520	106	164	48	70,5
	23076 KCW33	0	3	H3076	380	360	560	135	193	48	116
	23176 KCW33	1	3	H3176	380	360	620	194	264	60	232
	23276 KCW33	2	3	H3276	380	360	680	240	310	60	378
380	**23980 KCW33**	9	3	H3980	400	380	540	106	168	52	71
	23080 KCW33	0	3	H3080	400	380	600	148	210	52	148
	23180 KCW33	1	3	H3180	400	380	650	200	272	62	261
	23280 KCW33	2	3	H3280	400	380	720	256	328	62	454
400	**23984 KCW33**	9	3	H3984	420	400	560	106	168	52	78
	23084 KCW33	0	3	H3084	420	400	620	150	212	52	160
	23184 KCW33	1	3	H3184	420	400	700	224	304	70	350
	23284 KCW33	2	3	H3284	420	400	760	272	352	70	552
410	**23988 KCW33**	9	3	H3988	440	410	600	118	189	60	103
	23088 KCW33	0	3	H3088	440	410	650	157	228	60	182
	23188 KCW33	1	3	H3188	440	410	720	226	307	70	368
	23288 KCW33	2	3	H3288	440	410	790	280	361	70	604
430	**23992 KCW33**	9	3	H3992	460	430	620	118	189	60	106
	23092 KCW33	0	3	H3092	460	430	680	163	234	60	206
	23192 KCW33	1	3	H3192	460	430	760	240	326	75	433
	23292 KCW33	2	3	H3292	460	430	830	296	382	75	699

- warehouse - order - phone

Basic load ratings [kN]		Limiting speed [rpm]		Basic makes*					Bearing No.
dyn. C	stat. C_0	grease	oil	-	M	TV	C3	C4	
3050	4550	630	800	●	◴	●	◴	●	**22352 KCW33**
965	2040	1000	1400	●	◴	●	◴	●	**23956 KCW33**
1520	2850	850	1100	●	◴	●	◴	◴	**23056 KCW33**
2300	4250	750	950	●	●	●	●	●	**23156 KCW33**
2350	3750	800	1000	●	◴	●	◴	●	**22256 KCW33**
2820	4900	600	750	●	◴	●	◴	●	**23256 KCW33**
3450	5200	600	750	●	◴	●	◴	●	**22356 KCW33**
1200	2500	950	1300	●	◴	●	◴	●	**23960 KCW33**
1840	3450	800	1000	●	●	●	●	●	**23060 KCW33**
2820	5100	670	850	●	●	●	●	●	**23160 KCW33**
2760	4250	750	950	●	◴	●	◴	●	**22260 KCW33**
3340	5850	530	670	●	◴	●	◴	●	**23260 KCW33**
1240	2700	900	1200	●	◴	●	◴	●	**23964 KCW33**
1960	3800	800	1000	●	●	●	●	●	**23064 KCW33**
3280	6000	630	800	●	●	●	●	●	**23164 KCW33**
3050	4900	490	660	●	◴	●	◴	●	**22264 KCW33**
3850	6700	500	630	●	◴	●	◴	●	**23264 KCW33**
1270	2800	900	1200	●	◴	●	◴	●	**23968 KCW33**
2350	4550	700	900	●	●	●	●	●	**23068 KCW33**
3680	6800	600	750	●	●	●	●	●	**23168 KCW33**
4660	8300	430	530	●	◴	●	◴	●	**23268 KCW33**
1290	2900	850	1100	●	◴	●	◴	●	**23972 KCW33**
2390	4800	670	850	◴	●	●	●	●	**23072 KCW33**
3740	6950	560	700	◴	●	●	●	●	**23172 KCW33**
4660	8300	400	500	●	◴	●	◴	●	**23272 KCW33**
1730	3800	800	1000	●	◴	●	◴	●	**23976 KCW33**
2480	5000	630	800	◴	●	●	●	●	**23076 KCW33**
3740	7100	400	500	◴	●	●	●	●	**23176 KCW33**
5060	9150	380	480	◴	◴	●	◴	●	**23276 KCW33**
1730	3900	750	950	◴	◴	●	◴	●	**23980 KCW33**
2880	5700	600	750	◴	●	●	●	●	**23080 KCW33**
4080	7650	380	480	◴	●	●	●	●	**23180 KCW33**
5750	10400	340	430	◴	◴	●	◴	●	**23280 KCW33**
1760	4150	700	900	◴	◴	●	◴	●	**23984 KCW33**
2990	6000	450	516	◴	●	●	●	●	**23084 KCW33**
4890	9300	360	450	◴	●	●	●	●	**23184 KCW33**
6330	11600	320	400	◴	◴	●	◴	●	**23284 KCW33**
2100	4900	670	850	◴	◴	●	◴	●	**23988 KCW33**
3220	6550	430	530	●	●	●	●	●	**23088 KCW33**
5180	10000	340	430	◴	●	●	●	●	**23188 KCW33**
6730	12500	320	400	●	●	●	●	●	**23288 KCW33**
2190	5000	430	530	●	●	●	●	●	**23992 KCW33**
3450	6950	400	500	●	●	●	●	●	**23092 KCW33**
5640	10800	320	440	●	●	●	●	●	**23192 KCW33**
7360	13700	300	380	●	●	●	●	●	**23292 KCW33**

* Other products also available



https://nppnovoteh.com

7. SPHERICAL ROLLER BEARINGS

7.2. Spherical roller bearings with adapter sleeve



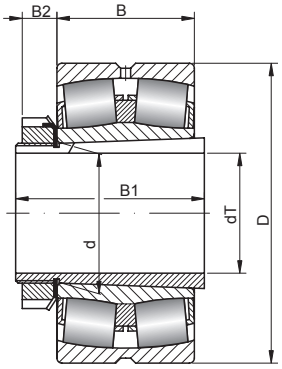

450 – 900 mm

Shaft [mm]	Bearing No.	Series		Sleeve No.	Dimensions [mm]						Weight [kg]
		SD	SB		d	dT	D	B	B1	B2	
450	**23996 KCW33**	9	3	H3996	480	450	650	128	200	60	130
	23096 KCW33	0	3	H3096	480	450	700	165	237	60	215
	23196 KCW33	1	3	H3196	480	450	790	248	335	75	485
	23296 KCW33	2	3	H3296	480	450	870	310	397	75	820
470	**239/500 KCW33**	9	3	H39/500	500	470	670	128	208	68	130
	230/500 KCW33	0	3	H30/500	500	470	720	167	247	68	225
	231/500 KCW33	1	3	H31/500	500	470	830	264	356	80	577
	232/500 KCW33	2	3	H32/500	500	470	920	336	-	-	992
500	**239/530 KCW33**	9	3	H39/530	530	500	710	136	216	68	152
	230/530 KCW33	0	3	H30/530	530	500	780	185	265	68	293
	231/530 KCW33	1	3	H31/530	530	500	870	272	-	-	641
	232/530 KCW33	2	3	H32/530	530	500	980	355	-	-	1200
530	**239/560 KCW33**	9	3	H39/560	560	530	750	140	227	75	175
	230/560 KCW33	0	3	H30/560	560	530	820	195	282	75	350
	231/560 KCW33	1	3	H31/560	560	530	920	280	-	-	740
	232/560 KCW33	2	3	H32/560	560	530	1030	365	-	-	1350
560	**239/600 KCW33**	9	3	H39/600	600	560	800	150	239	75	210
	230/600 KCW33	0	3	H30/600	600	560	870	200	289	75	400
	231/600 KCW33	1	3	H31/600	600	560	980	300	-	-	888
	232/600 KCW33	2	3	H32/600	600	560	1090	388	-	-	1590
600	**239/630 KCW33**	9	3	H39/630	630	600	850	165	254	75	281
	230/630 KCW33	0	3	H30/630	630	600	920	212	301	75	488
	231/630 KCW33	1	3	H31/630	630	600	1030	315	-	-	1040
	232/630 KCW33	2	3	H32/630	630	600	1150	412	-	-	1880
630	**239/670 KCW33**	9	3	H39/670	670	630	900	170	264	80	316
	230/670 KCW33	0	3	H30/670	670	630	980	230	324	80	590
	231/670 KCW33	1	3	H31/670	670	630	1090	336	-	-	1240
670	**239/710 KCW33**	9	3	H39/710	710	670	950	180	286	90	347
	230/710 KCW33	0	3	H30/710	710	670	1030	236	342	90	652
	231/710 KCW33	1	3	H31/710	710	670	1150	345	-	-	1400
710	**239/750 KCW33**	9	3	H39/750	750	710	1000	185	291	90	418
	230/750 KCW33	0	3	H30/750	750	710	1090	250	356	90	783
	231/750 KCW33	1	3	H31/750	750	710	1220	365	-	-	1670
750	**239/800 KCW33**	9	3	H39/800	800	750	1060	195	303	90	490
	230/800 KCW33	0	3	H30/800	800	750	1150	258	366	90	900
	231/800 KCW33	1	3	H31/800	800	750	1280	375	-	-	1850
800	**239/850 KCW33**	9	3	H39/850	850	800	1120	200	308	90	563
	230/850 KCW33	0	3	H30/850	850	800	1220	272	-	-	1050
	231/850 KCW33	1	3	H31/850	850	800	1360	400	-	-	2230
850	**239/900 KCW33**	9	3	H39/900	900	850	1180	206	326	100	630
	230/900 KCW33	0	3	H30/900	900	850	1280	280	-	-	1160
	231/900 KCW33	1	3	H31/900	900	850	1420	412	-	-	2450
900	**239/950 KCW33**	9	3	H39/950	950	900	1250	224	-	-	731
	230/950 KCW33	0	3	H30/950	950	900	1360	300	-	-	1420

- warehouse - order - phone

Basic load ratings [kN]		Limiting speed [rpm]		Basic makes*					Bearing No.
dyn. C	stat. C_0	grease	oil	-	M	TV	C3	C4	
2530	5700	410	510	✓	✓	✓	✓	✓	**23996 KCW33**
3340	6800	380	480	✓	✓	✓	✓	✓	**23096 KCW33**
6100	12000	300	380	✓	✓	✓	✓	✓	**23196 KCW33**
8170	15000	260	340	✓	✓	✓	✓	✓	**23296 KCW33**
2600	6300	400	500	✓	✓	✓	✓	✓	**239/500 KCW33**
3900	8500	310	410	✓	✓	✓	✓	✓	**230/500 KCW33**
7100	14300	260	350	✓	✓	✓	✓	✓	**231/500 KCW33**
8770	16700	230	310	✓	✓	✓	✓	✓	**232/500 KCW33**
2850	6800	360	450	✓	✓	✓	✓	✓	**239/530 KCW33**
4400	9500	280	370	✓	✓	✓	✓	✓	**230/530 KCW33**
7170	14200	235	315	✓	✓	✓	✓	✓	**231/530 KCW33**
10500	18900	220	300	✓	✓	✓	✓	✓	**232/530 KCW33**
3100	7650	340	430	✓	✓	✓	✓	✓	**239/560 KCW33**
5100	11000	265	355	✓	✓	✓	✓	✓	**230/560 KCW33**
7800	15500	225	305	✓	✓	✓	✓	✓	**231/560 KCW33**
11200	20300	200	280	✓	✓	✓	✓	✓	**232/560 KCW33**
3450	8650	320	400	✓	✓	✓	✓	✓	**239/600 KCW33**
5700	12500	250	330	✓	✓	✓	✓	✓	**230/600 KCW33**
9040	18400	210	280	✓	✓	✓	✓	✓	**231/600 KCW33**
12800	24000	190	260	✓	✓	✓	✓	✓	**232/600 KCW33**
4050	9800	280	360	✓	✓	✓	✓	✓	**239/630 KCW33**
6300	13700	220	300	✓	✓	✓	✓	✓	**230/630 KCW33**
9610	19500	185	255	✓	✓	✓	✓	✓	**231/630 KCW33**
14400	27100	180	240	✓	✓	✓	✓	✓	**232/630 KCW33**
4300	10600	260	340	✓	✓	✓	✓	✓	**239/670 KCW33**
7200	16000	205	280	✓	✓	✓	✓	✓	**230/670 KCW33**
10600	21800	170	240	✓	✓	✓	✓	✓	**231/670 KCW33**
4800	12000	240	320	✓	✓	✓	✓	✓	**239/710 KCW33**
7650	17000	190	265	✓	✓	✓	✓	✓	**230/710 KCW33**
11800	24800	160	225	✓	✓	✓	✓	✓	**231/710 KCW33**
5200	12900	220	300	✓	✓	✓	✓	✓	**239/750 KCW33**
8500	19000	175	250	✓	✓	✓	✓	✓	**230/750 KCW33**
13300	28000	145	210	✓	✓	✓	✓	✓	**231/750 KCW33**
5850	15000	200	280	✓	✓	✓	✓	✓	**239/800 KCW33**
9300	21200	155	230	✓	✓	✓	✓	✓	**230/800 KCW33**
13800	29400	130	200	✓	✓	✓	✓	✓	**231/800 KCW33**
6300	16300	190	260	✓	✓	✓	✓	✓	**239/850 KCW33**
9570	22600	150	215	✓	✓	✓	✓	✓	**230/850 KCW33**
15600	33600	125	185	✓	✓	✓	✓	✓	**231/850 KCW33**
6550	17300	180	250	✓	✓	✓	✓	✓	**239/900 KCW33**
10300	24800	140	205	✓	✓	✓	✓	✓	**230/900 KCW33**
16800	37100	120	175	✓	✓	✓	✓	✓	**231/900 KCW33**
7790	20700	170	240	✓	✓	✓	✓	✓	**239/950 KCW33**
11500	27700	135	200	✓	✓	✓	✓	✓	**230/950 KCW33**

* Other products also available



https://nppnovoteh.com

7. SPHERICAL ROLLER BEARINGS

7.2. Spherical roller bearings with adapter sleeve



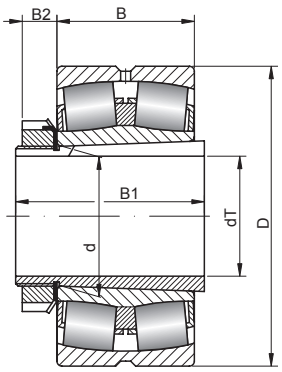

950 – 1180 mm

Shaft [mm]	Bearing No.	Series		Sleeve No.	Dimensions [mm]						Weight [kg]
		SD	SB		d	dT	D	B	B1	B2	
950	**239/1000 KCW33**	9	3	H39/1000	1000	950	1320	236	-	-	866
	230/1000 KCW33	0	3	H30/1000	1000	950	1420	308	-	-	1570
1000	**239/1060 KCW33**	9	3	H39/1060	1060	1000	1400	250	-	-	1010
1060	**239/1120 KCW33**	9	3	H39/1120	1120	1060	1460	250	-	-	1060
1120	**239/1180 KCW33**	9	3	H39/1180	1180	1120	1540	272	-	-	1280
1180	**239/1250 KCW33**	9	3	H39/1250	1250	1180	1630	280	-	-	1480

- warehouse - order - phone

https://nppnovoteh.com

Basic load ratings [kN]		Limiting speed [rpm]		Basic makes*					Bearing No.
dyn. C	stat. C_0	grease	oil	-	M	TV	C3	C4	
8240	21500	160	230	✓	✓	✓	✓	✓	**239/1000 KCW33**
12300	30000	125	190	✓	✓	✓	✓	✓	**230/1000 KCW33**
9500	25300	150	220	✓	✓	✓	✓	✓	**239/1060 KCW33**
9520	25700	130	200	✓	✓	✓	✓	✓	**239/1120 KCW33**
10900	29800	110	180	✓	✓	✓	✓	✓	**239/1180 KCW33**
11500	31500	100	160	✓	✓	✓	✓	✓	**239/1250 KCW33**

* Other products also available



https://nppnovoteh.com

7. SPHERICAL ROLLER BEARINGS

7.3. Spherical roller bearings with withdrawal sleeve



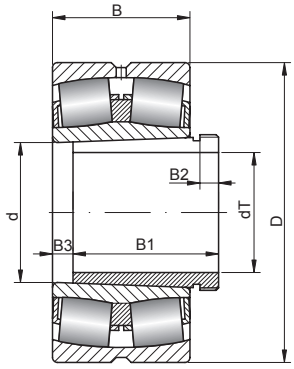

35 – 100 mm

Shaft [mm]	Bearing No.	Series		Sleeve No.	Dimensions [mm]						Weight [kg]
		SD	SB		d	dT	D	B	B1	B2	
35	**22208 KCW33**	2	2	AH308	40	35	80	23	3	6	0,487
	21308 KCW33	3	0	AH308	40	35	90	23	3	6	0,706
	22308 KCW33	3	2	AH2308	40	35	90	33	3	7	0,984
40	**22209 KCW33**	2	2	AH309	45	40	85	23	3	6	0,57
	21309 KCW33	3	0	AH309	45	40	100	25	3	6	0,947
	22309 KCW33	3	2	AH2309	45	40	100	36	3	7	1,36
45	**22210 KCW33**	2	2	AH310	50	45	90	23	3	7	0,582
	21310 KCW33	3	0	AH310	50	45	110	27	3	7	1,21
	22310 KCW33	3	2	AH310	50	45	110	40	3	9	1,7
50	**22211 KCW33**	2	2	AH311	55	50	100	25	3	7	0,8
	21311 KCW33	3	0	AH311	55	50	120	29	3	7	1,55
	22311 KCW33	3	2	AH311	55	50	120	43	3	10	2,02
55	**22212 KCW33**	2	2	AH312	60	55	110	31	3	8	1
	21312 KCW33	3	0	AH312	60	55	130	31	3	8	1,93
	22312 KCW33	3	2	AH2312	60	55	130	46	3	11	2,8
60	**22213 KCW33**	2	2	AH313	65	60	120	31	3	8	1,27
	22214 KCW33	2	2	AH314	70	60	125	31	4	8	1,46
	21313 KCW33	3	0	AH313	65	60	140	33	3	8	2,42
	22313 KCW33	3	2	AH2313	65	60	140	48	3	12	3,57
	21314 KCW33	3	0	AH314	70	60	150	35	4	8	2,95
	22314 KCW33	3	2	AH2314	70	60	150	51	4	12	4,25
65	**22215 KCW33**	2	2	AH315	75	65	130	31	4	8	1,65
	21315 KCW33	3	0	AH315	75	65	160	37	4	8	3,55
	22315 KCW33	3	2	AH2315	75	65	160	55	4	12	5,01
70	**22216 KCW33**	2	2	AH316	80	70	140	33	4	8	1,97
	21316 KCW33	3	0	AH316	80	70	170	39	4	8	4,23
	22316 KCW33	3	2	AH2316	80	70	170	58	4	12	5,95
75	**22217 KCW33**	2	2	AH317	85	75	150	36	4	9	2,49
	21317 KCW33	3	0	AH317	85	75	180	41	4	9	4,93
	22317 KCW33	3	2	AH2317	85	75	180	60	4	13	6,84
80	**22218 KCW33**	2	2	AH318	90	80	160	40	4	9	3,2
	23218 KCW33	2	3	AH3218	90	80	160	52.4	4	10	4,2
	21318 KCW33	3	0	AH318	90	80	190	43	4	9	5,74
	22318 KCW33	3	2	AH2318	90	80	190	64	4	14	8,08
85	**22219 KCW33**	2	2	AH319	95	85	170	43	4	10	3,89
	21319 KCW33	3	0	AH319	95	85	200	45	4	10	6,63
	22319 KCW33	3	2	AH2319	95	85	200	67	4	16	9,21
90	**23120 KCW33**	1	3	AH3120	100	90	165	52	4	11	4,2
	22220 KCW33	2	2	AH320	100	90	180	46	4	10	4,72
	23220 KCW33	2	3	AH3220	100	90	180	60.3	4	11	6,2
	21320 KCW33	3	0	AH320	100	90	215	47	4	10	8,19
	22320 KCW33	3	2	AH2320	100	90	215	73	4	16	11,7
100	**23122 KCW33**	1	3	AH3122	110	100	180	56	4	11	5,13
	22222 KCW33	2	2	AH3122	110	100	200	53	4	11	7,1

- warehouse - order - phone

https://nppnovoteh.com

Basic load ratings [kN]		Limiting speed [rpm]		Basic makes*					Bearing No.
dyn. C	stat. C_0	grease	oil	-	M	TV	C3	C4	
73,6	81,5	6000	7500	●	○	●	○	○	**22208 KCW33**
82,8	98	4500	5600	●	●	●	○	○	**21308 KCW33**
115	122	4500	5600	●	●	●	○	○	**22308 KCW33**
77,1	88	5300	6700	●	○	●	○	○	**22209 KCW33**
101	114	4300	5300	●	●	●	○	○	**21309 KCW33**
138	160	3800	4800	●	●	●	○	○	**22309 KCW33**
84,5	100	5000	6300	●	○	●	○	○	**22210 KCW33**
120	140	3600	4800	●	●	●	○	○	**21310 KCW33**
176	200	3400	4300	●	●	●	○	○	**22310 KCW33**
99,5	118	4500	5600	●	○	●	○	○	**22211 KCW33**
138	163	3400	4300	●	●	●	○	○	**21311 KCW33**
199	232	3200	4000	●	●	●	○	○	**22311 KCW33**
122	146	4000	5000	●	○	●	○	○	**22212 KCW33**
161	200	3000	3800	●	○	●	○	○	**21312 KCW33**
235	280	3000	3800	●	○	●	○	○	**22312 KCW33**
176	216	3800	4800	●	○	●	○	○	**22213 KCW33**
148	186	3600	4500	●	○	●	○	○	**22214 KCW33**
184	240	2800	3600	●	○	●	○	○	**21313 KCW33**
253	300	2600	3400	●	○	●	○	○	**22313 KCW33**
207	260	2600	3400	●	○	●	○	○	**21314 KCW33**
311	380	2400	3200	●	○	●	○	○	**22314 KCW33**
158	208	3400	4300	●	○	●	○	○	**22215 KCW33**
235	300	2400	3200	●	○	●	○	○	**21315 KCW33**
345	430	2200	3000	●	○	●	○	○	**22315 KCW33**
176	228	3200	4000	●	○	●	○	○	**22216 KCW33**
258	335	2200	3000	●	○	●	○	○	**21316 KCW33**
374	455	2000	2800	●	○	●	○	○	**22316 KCW33**
210	270	3000	3800	●	○	●	○	○	**22217 KCW33**
293	375	2000	2800	●	○	●	○	○	**21317 KCW33**
420	520	1900	2600	●	○	●	○	○	**22317 KCW33**
253	340	2600	3400	●	○	●	○	○	**22218 KCW33**
311	440	1900	2600	●	○	●	○	○	**23218 KCW33**
322	425	1900	2600	●	○	●	○	○	**21318 KCW33**
477	610	1800	2400	●	○	●	○	○	**22318 KCW33**
282	375	2400	3200	●	○	●	○	○	**22219 KCW33**
351	480	1800	2400	●	○	●	○	○	**21319 KCW33**
518	670	1800	2400	●	○	●	○	○	**22319 KCW33**
322	490	2000	2800	●	○	●	○	○	**23120 KCW33**
311	415	2200	3000	●	○	●	○	○	**22220 KCW33**
414	600	1700	2200	●	○	●	○	○	**23220 KCW33**
385	530	1700	2200	●	○	●	○	○	**21320 KCW33**
610	800	1700	2200	●	○	●	○	○	**22320 KCW33**
374	585	1900	2600	●	○	●	○	○	**23122 KCW33**
408	560	2000	2800	●	○	●	○	○	**22222 KCW33**

* Other products also available



https://nppnovoteh.com

7. SPHERICAL ROLLER BEARINGS

7.3. Spherical roller bearings with withdrawal sleeve



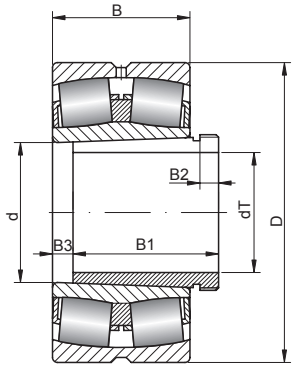

100 – 160 mm

Shaft [mm]	Bearing No.	Series		Sleeve No.	Dimensions [mm]						Weight [kg]
		SD	SB		d	dT	D	B	B1	B2	
100 cont.	**23222 KCW33**	2	3	AH3222	110	100	200	70	4	11	9,1
	21322 KCW33	3	0	AH322	110	100	240	50	4	12	11,1
	22322 KCW33	3	2	AH2322	110	100	240	80	4	16	17,4
105	**24122 K30CW33**	1	4	AH24122	110	105	180	69	9	13	6,85
110	**23024 KCW33**	0	3	AH3024	120	110	180	46	4	13	4,22
	23124 KCW33	1	3	AH3124	120	110	200	62	4	12	7,3
	22224 KCW33	2	2	AH3124	120	110	215	58	4	12	8,72
	23224 KCW33	2	3	AH3224	120	110	215	76	4	13	11
	22324 KCW33	3	2	AH2324	120	110	260	86	4	17	21
115	**24024 K30CW33**	0	4	AH24024	120	115	180	60	9	13	4,96
	23026 KCW33	0	3	AH3026	130	115	200	52	4	14	5,6
	24124 K30CW33	1	4	AH24124	120	115	200	80	9	13	10
	23126 KCW33	1	3	AH3126	130	115	210	64	4	12	8,1
	22226 KCW33	2	2	AH3126	130	115	230	64	4	12	10,4
	23226 KCW33	2	3	AH3226	130	115	230	80	4	15	13
	22326 KCW33	3	2	AH2326	130	115	280	93	4	19	26,7
125	**24026 K30CW33**	0	4	AH24026	130	125	200	69	10	14	7,33
	23028 KCW33	0	3	AH3028	140	125	210	53	5	14	6
	24126 K30CW33	1	4	AH24126	130	125	210	80	10	14	11
	23128 KCW33	1	3	AH3128	140	125	225	68	5	14	9,8
	22228 KCW33	2	2	AH3128	140	125	250	68	5	14	13,5
	23228 KCW33	2	3	AH3228	140	125	250	88	5	15	17,7
	22328 KCW33	3	2	AH2328	140	125	300	102	5	20	34
135	**24028 K30CW33**	0	4	AH24028	140	135	210	69	10	14	8,5
	23030 KCW33	0	3	AH3030	150	135	225	56	5	15	7
	24128 K30CW33	1	4	AH24128	140	135	225	85	10	14	13
	23130 KCW33	1	3	AH3130	150	135	250	80	5	15	15
	22230 KCW33	2	2	AH3130	150	135	270	73	5	15	17
	23230 KCW33	2	3	AH3230	150	135	270	96	5	17	22
	22330 KCW33	3	2	AH2330	150	135	320	108	5	24	40,6
140	**23032 KCW33**	0	3	AH3032	160	140	240	60	5	16	8
	23132 KCW33	1	3	AH3132	160	140	270	86	5	16	19
	22232 KCW33	2	2	AH3132	160	140	290	80	5	16	22,5
	23232 KCW33	2	3	AH3232	160	140	290	104	6	20	28,9
	22332 KCW33	3	2	AH2332	160	140	340	114	6	24	50,5
145	**24030 K30CW33**	0	4	AH24030	150	145	225	75	11	15	10,5
	24130 K30CW33	1	4	AH24130	150	145	250	100	11	15	19,5
150	**24032 K30CW33**	0	4	AH24032	160	150	240	80	11	15	13
	23034 KCW33	0	3	AH3034	170	150	260	67	5	17	12,1
	24132 K30CW33	1	4	AH24132	160	150	270	109	11	15	25
	23134 KCW33	1	3	AH3134	170	150	280	88	5	16	20,6
	22234 KCW33	2	2	AH3134	170	150	310	86	5	16	26,3
	23234 KCW33	2	3	AH3234	170	150	310	110	6	24	34,2
	22334 KCW33	3	2	AH2334	170	150	360	120	6	24	58,2
160	**23936 KCW33**	9	3	AH3936	180	160	250	52	5	13	7,7
	24034 K30CW33	0	4	AH24034	170	160	260	90	11	16	17,5
	23036 KCW33	0	3	AH3036	180	160	280	74	6	17	16,6

- warehouse - order - phone

Basic load ratings [kN]		Limiting speed [rpm]		Basic makes*					Bearing No.
dyn. C	stat. C_0	grease	oil	-	M	TV	C3	C4	
518	765	1600	2000	●	◴	●	◴	◴	**23222 KCW33**
460	630	1600	2000	●	◴	●	◴	◴	**21322 KCW33**
725	965	1600	2000	●	◴	●	◴	◴	**22322 KCW33**
460	750	1000	1400	●	●	●	●	●	**24122 K30CW33**
305	510	2000	2800	●	◴	●	◴	◴	**23024 KCW33**
449	695	1800	2400	●	◴	●	◴	◴	**23124 KCW33**
466	670	1900	2600	●	◴	●	◴	◴	**22224 KCW33**
610	930	1500	1900	●	◴	●	◴	◴	**23224 KCW33**
845	1120	1400	1800	●	◴	●	◴	◴	**22324 KCW33**
397	709	1700	2300	●	●	●	●	●	**24024 K30CW33**
374	610	1900	2600	●	◴	●	◴	◴	**23026 KCW33**
575	950	900	1200	●	●	●	●	●	**24124 K30CW33**
489	780	1700	2200	●	◴	●	◴	◴	**23126 KCW33**
546	800	1800	2400	●	◴	●	◴	◴	**22226 KCW33**
690	1060	1300	1700	●	◴	●	◴	◴	**23226 KCW33**
978	1320	1300	1700	●	◴	●	◴	◴	**22326 KCW33**
512	914	1600	2100	●	●	●	●	●	**24026 K30CW33**
397	680	1800	2400	●	◴	●	◴	◴	**23028 KCW33**
587	1000	900	1200	●	●	●	●	●	**24126 K30CW33**
546	900	1600	2000	●	◴	●	◴	◴	**23128 KCW33**
610	900	1700	2200	●	◴	●	◴	◴	**22228 KCW33**
799	1250	1200	1600	●	◴	●	◴	◴	**23228 KCW33**
1130	1560	1100	1500	●	◴	●	◴	◴	**22328 KCW33**
495	900	1400	1800	●	●	●	●	●	**24028 K30CW33**
437	750	1700	2200	●	◴	●	◴	◴	**23030 KCW33**
673	1160	850	1100	●	●	●	●	●	**24128 K30CW33**
725	1200	1400	1800	●	◴	●	◴	◴	**23130 KCW33**
736	1080	1600	2000	●	◴	●	◴	◴	**22230 KCW33**
937	1460	1100	1500	●	◴	●	◴	◴	**23230 KCW33**
1270	1760	1000	1400	●	◴	●	◴	◴	**22330 KCW33**
506	880	1700	2200	●	◴	●	◴	◴	**23032 KCW33**
845	1370	1300	1700	●	◴	●	◴	◴	**23132 KCW33**
863	1290	1500	1900	●	◴	●	◴	◴	**22232 KCW33**
1070	1660	1000	1400	●	◴	●	◴	◴	**23232 KCW33**
1380	1960	950	1300	●	◴	●	◴	◴	**22332 KCW33**
564	1040	1300	1700	●	●	●	●	●	**24030 K30CW33**
897	1530	800	1000	●	●	●	●	●	**24130 K30CW33**
656	1200	1100	1500	●	●	●	●	●	**24032 K30CW33**
621	1060	1600	2000	●	◴	●	◴	◴	**23034 KCW33**
1040	1760	700	900	●	●	●	●	●	**24132 K30CW33**
897	1500	1200	1600	●	◴	●	◴	◴	**23134 KCW33**
978	1460	1300	1700	●	◴	●	◴	◴	**22234 KCW33**
1220	1930	950	1300	●	◴	●	◴	◴	**23234 KCW33**
1540	2160	950	1300	●	◴	●	◴	◴	**22334 KCW33**
431	830	1700	2200	●	◴	●	◴	◴	**23936 KCW33**
799	1460	1000	1400	●	●	●	●	●	**24034 K30CW33**
725	1250	1400	1800	●	◴	●	◴	◴	**23036 KCW33**

* Other products also available



https://nppnovoteh.com

7. SPHERICAL ROLLER BEARINGS

7.3. Spherical roller bearings with withdrawal sleeve



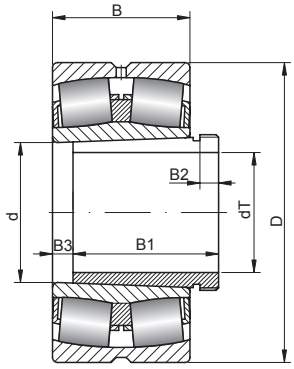

160 – 260 mm

Shaft [mm]	Bearing No.	Series		Sleeve No.	Dimensions [mm]						Weight [kg]
		SD	SB		d	dT	D	B	B1	B2	
160 cont.	**24134 K30CW33**	1	4	AH24134	170	160	280	109	11	16	26,5
	23136 KCW33	1	3	AH3136	180	160	300	96	6	19	26,8
	22236 KCW33	2	2	AH2236	180	160	320	86	5	17	28,5
	23236 KCW33	2	3	AH3236	180	160	320	112	6	25	38,6
	22336 KCW33	3	2	AH2336	180	160	380	126	6	26	68,5
170	**23938 KCW33**	9	3	AH3938	190	170	260	52	5	13	8,3
	24036 K30CW33	0	4	AH24036	180	170	280	100	11	16	23
	23038 KCW33	0	3	AH3038	190	170	290	75	6	18	16,9
	24136 K30CW33	1	4	AH24136	180	170	300	118	11	16	33,5
	23138 KCW33	1	3	AH3138	190	170	320	104	6	20	31,4
	22238 KCW33	2	2	AH2238	190	170	340	92	5	18	37
	23238 KCW33	2	3	AH3238	190	170	340	120	7	25	47,5
	22338 KCW33	3	2	AH2338	190	170	400	132	7	26	79,4
180	**23940 KCW33**	9	3	AH3940	200	180	280	60	6	16	12,3
	24038 K30CW33	0	4	AH24038	190	180	290	100	13	18	24
	23040 KCW33	0	3	AH3040	200	180	310	82	6	19	22,3
	24138 K30CW33	1	4	AH24138	190	180	320	128	13	18	42
	23140 KCW33	1	3	AH3140	200	180	340	112	6	21	41,6
	22240 KCW33	2	2	AH2240	200	180	360	98	5	19	43,2
	23240 KCW33	2	3	AH3240	200	180	360	128	7	24	57,6
	22340 KCW33	3	2	AH2340	200	180	420	138	7	30	90,4
190	**24040 K30CW33**	0	4	AH24040	200	190	310	109	13	18	30,5
	24140 K30CW33	1	4	AH24140	200	190	340	140	13	18	52
200	**23944 KCW33**	9	3	AH3944	220	200	300	60	6	16	12,2
	23044 KCW33	0	3	AH3044	220	200	340	90	6	20	30,2
	24044 K30CW33	0	4	AH24044	220	200	340	118	14	20	39,5
	23144 KCW33	1	3	AH3144	220	200	370	120	6	23	52,5
	24144 K30CW33	1	4	AH24144	220	200	370	150	14	20	65
	22244 KCW33	2	2	AH2244	220	200	400	108	6	20	59,6
	23244 KCW33	2	3	AH2344	220	200	400	144	8	30	81,4
	22344 KCW33	3	2	AH2344	220	200	460	145	8	30	117
220	**23948 KCW33**	9	3	AH3948	240	220	320	60	6	16	13,5
	23048 KCW33	0	3	AH3048	240	220	360	92	7	21	33
	24048 K30CW33	0	4	AH24048	240	220	360	118	15	20	43,5
	23148 KCW33	1	3	AH3148	240	220	400	128	7	25	65
	24148 K30CW33	1	4	AH24148	240	220	400	160	15	20	80,5
	22248 KCW33	2	2	AH2248	240	220	440	120	6	21	81,2
	23248 KCW33	2	3	AH2348	240	220	440	160	8	30	108
	22348 KCW33	3	2	AH2348	240	220	500	155	8	30	149
240	**23952 KCW33**	9	3	AH3952	260	240	360	75	6	18	22,4
	23052 KCW33	0	3	AH3052	260	240	400	104	7	23	47,9
	24052 K30CW33	0	4	AH24052	260	240	400	140	16	22	65
	23152 KCW33	1	3	AH3152	260	240	440	144	7	26	93
	24152 K30CW33	1	4	AH24152	260	240	440	180	16	22	110
	22252 KCW33	2	2	AH2252	260	240	480	130	6	23	108
	23252 KCW33	2	3	AH2352	260	240	480	174	8	30	140
	22352 KCW33	3	2	AH2352	260	240	540	165	8	30	181
260	**23956 KCW33**	9	3	AH3956	280	260	380	75	6	18	25,1
	23056 KCW33	0	3	AH3056	280	260	420	106	8	24	52,2

- warehouse - order - phone

Basic load ratings [kN]		Limiting speed [rpm]		Basic makes*					Bearing No.
dyn. C	stat. C_0	grease	oil	-	M	TV	C3	C4	
1070	1860	670	850	●	●	●	●	●	**24134 K30CW33**
1050	1760	1100	1500	■	◴	●	◴	◴	**23136 KCW33**
1010	1560	1300	1700	■	◴	●	◴	◴	**22236 KCW33**
1290	2120	900	1200	■	◴	●	◴	◴	**23236 KCW33**
1730	2450	900	1200	■	◴	●	◴	◴	**22336 KCW33**
414	800	1700	2200	■	◴	●	◴	◴	**23938 KCW33**
937	1730	950	1300	●	●	●	●	●	**24036 K30CW33**
753	1340	1300	1700	■	◴	●	◴	◴	**23038 KCW33**
1220	2160	630	800	●	●	●	●	●	**24136 K30CW33**
1200	2080	1000	1400	■	◴	●	◴	◴	**23138 KCW33**
1110	1700	1200	1600	■	◴	●	◴	◴	**22238 KCW33**
1460	2400	850	1100	■	◴	●	◴	◴	**23238 KCW33**
1870	2650	850	1100	■	◴	●	◴	◴	**22338 KCW33**
546	1040	1600	2000	■	◴	●	◴	◴	**23940 KCW33**
978	1800	950	1300	●	●	●	●	●	**24038 K30CW33**
880	1530	1200	1600	■	◴	●	◴	◴	**23040 KCW33**
1400	2500	600	750	●	●	●	●	●	**24138 K30CW33**
1380	2360	950	1300	■	◴	●	◴	◴	**23140 KCW33**
1270	1930	1100	1500	■	◴	●	◴	◴	**22240 KCW33**
1610	2700	850	1100	■	◴	●	◴	◴	**23240 KCW33**
2020	2900	850	1100	■	◴	●	◴	◴	**22340 KCW33**
1130	2120	900	1200	●	●	●	●	●	**24040 K30CW33**
1580	2800	560	700	●	●	●	●	●	**24140 K30CW33**
546	1080	1500	1900	■	◴	●	◴	◴	**23944 KCW33**
1050	1860	1100	1500	■	◴	●	◴	◴	**23044 KCW33**
1360	2600	850	1100	●	●	●	●	●	**24044 K30CW33**
1580	2750	900	1200	■	◴	●	◴	◴	**23144 KCW33**
1840	3350	500	630	●	●	●	●	●	**24144 K30CW33**
1520	2360	950	1300	■	◴	●	◴	◴	**22244 KCW33**
2070	3450	750	950	■	◴	●	◴	◴	**23244 KCW33**
2350	3450	750	950	■	◴	●	◴	◴	**22344 KCW33**
564	1160	1300	1700	■	◴	●	◴	◴	**23948 KCW33**
1130	2080	1000	1400	■	◴	●	◴	◴	**23048 KCW33**
1380	2700	800	1000	●	●	●	●	●	**24048 K30CW33**
1790	3200	850	1100	■	◴	●	◴	◴	**23148 KCW33**
2100	3900	480	600	●	●	●	●	●	**24148 K30CW33**
1910	3000	900	1200	■	◴	●	◴	◴	**22248 KCW33**
2530	4300	670	850	■	◴	●	◴	◴	**23248 KCW33**
2670	4000	670	850	■	◴	●	◴	◴	**22348 KCW33**
880	1800	1100	1500	■	◴	●	◴	◴	**23952 KCW33**
1400	2550	900	1200	■	◴	●	◴	◴	**23052 KCW33**
1760	3450	700	900	●	●	●	●	●	**24052 K30CW33**
2220	3900	800	1000	■	●	●	●	●	**23152 KCW33**
2620	4800	430	530	●	●	●	●	●	**24152 K30CW33**
2300	3550	850	1100	■	◴	●	◴	◴	**22252 KCW33**
2820	4750	630	800	■	◴	●	◴	◴	**23252 KCW33**
3050	4550	630	800	■	◴	●	◴	◴	**22352 KCW33**
965	2040	1000	1400	■	◴	●	◴	◴	**23956 KCW33**
1520	2850	850	1100	■	◴	●	◴	◴	**23056 KCW33**

* Other products also available



https://nppnovoteh.com

7. SPHERICAL ROLLER BEARINGS

7.3. Spherical roller bearings with withdrawal sleeve



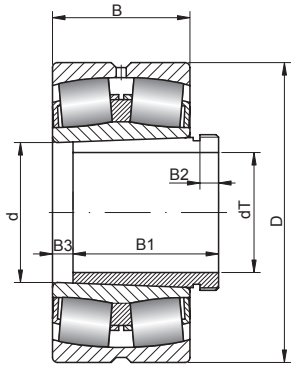

260 – 400 mm

Shaft [mm]	Bearing No.	Series		Sleeve No.	Dimensions [mm]						Weight [kg]
		SD	SB		d	dT	D	B	B1	B2	
260 cont.	**23156 KCW33**	1	3	AH3156	280	260	460	146	8	28	96,4
	24060 K30CW33	0	4	AH24056	300	260	460	160	18	24	98,7
	24156 K30CW33	1	4	AH24156	280	260	460	180	17	22	120
	22256 KCW33	2	2	AH2256	280	260	500	130	8	24	112
	23256 KCW33	2	3	AH2356	280	260	500	176	8	30	152
	22356 KCW33	3	2	AH2356	280	260	580	175	8	30	230
280	**23960 KCW33**	9	3	AH3960	300	280	420	90	7	21	40,4
	23060 KCW33	0	3	AH3060	300	280	460	118	8	26	72,3
	24064 K30CW33	0	4	AH24060	320	280	480	160	18	24	102
	23160 KCW33	1	3	AH3160	300	280	500	160	8	30	127
	24160 K30CW33	1	4	AH24160	300	280	500	200	18	24	155
	22260 KCW33	2	2	AH2260	300	280	540	140	8	26	140
	23260 KCW33	2	3	AH3260	300	280	540	192	8	34	192
300	**23964 KCW33**	9	3	AH3964	320	300	440	90	7	21	40,7
	23064 KCW33	0	3	AH3064	320	300	480	121	8	27	77,8
	24068 K30CW33	0	4	AH24064	340	300	520	180	19	26	143
	23164 KCW33	1	3	AH3164	320	300	540	176	8	31	164
	24164 K30CW33	1	4	AH24164	320	300	540	218	18	24	210
	22264 KCW33	2	2	AH2264	320	300	580	150	10	27	171
	23264 KCW33	2	3	AH3264	320	300	580	208	8	36	237
320	**23968 KCW33**	9	3	AH3968	340	320	460	90	7	21	44
	23068 KCW33	0	3	AH3068	340	320	520	133	9	28	104
	24072 K30CW33	0	4	AH24068	360	320	540	180	20	26	144
	23168 KCW33	1	3	AH3168	340	320	580	190	9	33	209
	24168 K30CW33	1	4	AH24168	340	320	580	243	19	26	270
	23268 KCW33	2	3	AH3268	340	320	620	224	9	38	299
340	**23972 KCW33**	9	3	AH3972	360	340	480	90	7	21	45
	23072 KCW33	0	3	AH3072	360	340	540	134	9	30	110
	24076 K30CW33	0	4	AH24072	380	340	560	180	20	28	145
	23172 KCW33	1	3	AH3172	360	340	600	192	9	35	228
	24172 K30CW33	1	4	AH24172	360	340	600	243	20	26	270
	23272 KCW33	2	3	AH3272	360	340	650	232	9	40	337
360	**23976 KCW33**	9	3	AH3976	380	360	520	106	8	22	70,5
	23076 KCW33	0	3	AH3076	380	360	560	135	10	31	116
	24080 K30CW33	0	4	AH24076	400	360	600	200	20	28	190
	23176 KCW33	1	3	AH3176	380	360	620	194	10	36	232
	24176 K30CW33	1	4	AH24176	380	360	620	243	20	28	300
	23276 KCW33	2	3	AH3276	380	360	680	240	10	42	378
380	**23980 KCW33**	9	3	AH3980	400	380	540	106	8	22	71
	23080 KCW33	0	3	AH3080	400	380	600	148	10	33	148
	24084 K30CW33	0	4	AH24080	420	380	620	200	22	30	197
	23180 KCW33	1	3	AH3180	400	380	650	200	10	38	261
	24180 K30CW33	1	4	AH24180	400	380	650	250	20	28	340
	23280 KCW33	2	3	AH3280	400	380	720	256	10	44	454
400	**23984 KCW33**	9	3	AH3984	420	400	560	106	8	22	78
	23084 KCW33	0	3	AH3084	420	400	620	150	10	34	160
	24088 K30CW33	0	4	AH24084	440	400	650	212	22	30	240
	23184 KCW33	1	3	AH3184	420	400	700	224	10	40	350
	24184 K30CW33	1	4	AH24184	420	400	700	280	22	30	445

- warehouse - order - phone

https://nppnovoteh.com

Basic load ratings [kN]		Limiting speed [rpm]		Basic makes*					Bearing No.
dyn. C	stat. C_0	grease	oil	-	M	TV	C3	C4	
2300	4250	750	950	●	○	○	○	○	**23156 KCW33**
2350	4750	600	750	○	○	○	○	○	**24060 K30CW33**
2670	5100	400	500	○	○	○	○	○	**24156 K30CW33**
2350	3750	800	1000	●	◴	○	◴	◴	**22256 KCW33**
2820	4900	600	750	●	◴	○	◴	◴	**23256 KCW33**
3450	5200	600	750	●	◴	○	◴	◴	**22356 KCW33**
1200	2500	950	1300	●	◴	○	◴	◴	**23960 KCW33**
1840	3450	800	1000	●	○	○	○	○	**23060 KCW33**
2480	5100	560	700	○	○	○	○	○	**24064 K30CW33**
2820	5100	670	850	●	○	○	○	○	**23160 KCW33**
3280	6300	360	450	○	○	○	○	○	**24160 K30CW33**
2760	4250	750	950	●	◴	○	◴	◴	**22260 KCW33**
3340	5850	530	670	●	◴	○	◴	◴	**23260 KCW33**
1240	2700	900	1200	●	◴	○	◴	◴	**23964 KCW33**
1960	3800	800	1000	●	○	○	○	○	**23064 KCW33**
2990	6200	530	670	○	○	○	○	○	**24068 K30CW33**
3280	6000	630	800	●	○	○	○	○	**23164 KCW33**
3740	7100	340	430	○	○	○	○	○	**24164 K30CW33**
3050	4900	490	660	●	◴	○	◴	◴	**22264 KCW33**
3850	6700	500	630	●	◴	○	◴	◴	**23264 KCW33**
1270	2800	900	1200	●	◴	○	◴	◴	**23968 KCW33**
2350	4550	700	900	●	○	○	○	○	**23068 KCW33**
3110	6550	500	630	○	○	○	○	○	**24072 K30CW33**
3680	6800	600	750	●	○	○	○	○	**23168 KCW33**
4660	8650	320	400	○	○	○	○	○	**24168 K30CW33**
4660	8300	430	530	●	◴	○	◴	◴	**23268 KCW33**
1290	2900	850	1100	●	◴	○	◴	◴	**23972 KCW33**
2390	4800	670	850	◴	○	○	○	○	**23072 KCW33**
3160	6800	480	600	○	○	○	○	○	**24076 K30CW33**
3740	6950	560	700	◴	○	○	○	○	**23172 KCW33**
4490	8650	300	380	○	○	○	○	○	**24172 K30CW33**
4660	8300	400	500	●	◴	○	◴	◴	**23272 KCW33**
1730	3800	800	1000	●	◴	○	◴	◴	**23976 KCW33**
2480	5000	630	800	◴	○	○	○	○	**23076 KCW33**
3620	7800	450	560	○	○	○	○	○	**24080 K30CW33**
3740	7100	400	500	◴	○	○	○	○	**23176 KCW33**
4600	9150	190	260	○	○	○	○	○	**24176 K30CW33**
5060	9150	380	480	◴	◴	○	◴	◴	**23276 KCW33**
1730	3900	750	950	◴	◴	○	◴	◴	**23980 KCW33**
2880	5700	600	750	◴	○	○	○	○	**23080 KCW33**
3740	8150	380	480	○	○	○	○	○	**24084 K30CW33**
4080	7650	380	480	◴	○	○	○	○	**23180 KCW33**
4890	9800	180	240	○	○	○	○	○	**24180 K30CW33**
5750	10400	340	430	◴	◴	○	◴	◴	**23280 KCW33**
1760	4150	700	900	◴	◴	○	◴	◴	**23984 KCW33**
2990	6000	450	516	◴	○	○	○	○	**23084 KCW33**
4080	8800	360	450	○	○	○	○	○	**24088 K30CW33**
4890	9300	360	450	◴	○	○	○	○	**23184 KCW33**
5750	11400	170	220	○	○	○	○	○	**24184 K30CW33**

* Other products also available



https://nppnovoteh.com

7. SPHERICAL ROLLER BEARINGS

7.3. Spherical roller bearings with withdrawal sleeve



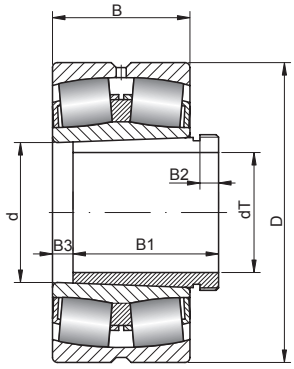

400 – 600 mm

Shaft [mm]	Bearing No.	Series		Sleeve No.	Dimensions [mm]						Weight [kg]
		SD	SB		d	dT	D	B	B1	B2	
400 cont.	**23284 KCW33**	2	3	AH3284	420	400	760	272	10	46	552
410	**23988 KCW33**	9	3	AH3988	440	410	600	118	8	25	103
	23088 KCW33	0	3	AH3088	440	410	650	157	11	35	182
	23188 KCW33	1	3	AH3188	440	410	720	226	11	42	368
	23288 KCW33	2	3	AH3288	440	410	790	280	11	48	604
420	**24092 K30CW33**	0	4	AH24088	460	420	680	218	23	32	270
	24188 K30CW33	1	4	AH24188	440	420	720	280	22	30	460
430	**23992 KCW33**	9	3	AH3992	460	430	620	118	8	25	106
	23092 KCW33	0	3	AH3092	460	430	680	163	11	37	206
	23192 KCW33	1	3	AH3192	460	430	760	240	11	43	433
	23292 KCW33	2	3	AH3292	460	430	830	296	11	50	699
440	**24096 K30CW33**	0	4	AH24092	480	440	700	218	23	32	270
	24192 K30CW33	1	4	AH24192	460	440	760	300	23	32	560
450	**23996 KCW33**	9	3	AH3996	480	450	650	128	9	28	130
	23096 KCW33	0	3	AH3096	480	450	700	165	12	38	215
	23196 KCW33	1	3	AH3196	480	450	790	248	12	45	485
	23296 KCW33	2	3	AH3296	480	450	870	310	12	52	820
460	**24196 K30CW33**	1	4	AH24196	480	460	790	308	25	35	605
470	**239/500 KCW33**	9	3	AH39/500	500	470	670	128	10	32	130
	230/500 KCW33	0	3	AH30/500	500	470	720	167	12	40	225
	231/500 KCW33	1	3	AH31/500	500	470	830	264	12	47	577
480	**240/500 K30CW33**	0	4	AH240/500	500	480	720	218	23	35	292
	241/500 K30CW33	1	4	AH241/500	500	480	830	325	25	37	701
	232/500 KCW33	2	3	AH32/500	500	480	920	336	-	-	992
500	**239/530 KCW33**	9	3	AH39/530	530	500	710	136	10	37	152
	230/530 KCW33	0	3	AH30/530	530	500	780	185	12	45	293
	240/530 K30CW33	0	4	AH240/530	530	500	780	250	-	-	408
	231/530 KCW33	1	3	AH31/530	530	500	870	272	-	-	641
	241/530 K30CW33	1	4	AH241/530	530	500	870	335	-	-	784
	232/530 KCW33	2	3	AH32/530	530	500	980	355	-	-	1200
530	**239/560 KCW33**	9	3	AH39/560	560	530	750	140	10	37	175
	230/560 KCW33	0	3	AH30/560	560	530	820	195	12	45	350
	240/560 K30CW33	0	4	AH240/560	560	530	820	258	-	-	460
	231/560 KCW33	1	3	AH31/560	560	530	920	280	-	-	740
	241/560 K30CW33	1	4	AH241/560	560	530	920	355	-	-	930
	232/560 KCW33	2	3	AH32/560	560	530	1030	365	-	-	1350
560	**239/600 KCW33**	9	3	AH39/600	600	560	800	150	10	38	210
	230/600 KCW33	0	3	AH30/600	600	560	870	200	14	45	400
570	**240/600 K30CW33**	0	4	AH240/600	600	570	870	272	-	-	538
	231/600 KCW33	1	3	AH31/600	600	570	980	300	-	-	888
	241/600 K30CW33	1	4	AH241/600	600	570	980	375	-	-	1100
	232/600 KCW33	2	3	AH32/600	600	570	1090	388	-	-	1590
600	**239/630 KCW33**	9	3	AH39/630	630	600	850	165	12	40	281

- warehouse - order - phone

Basic load ratings [kN]		Limiting speed [rpm]		Basic makes*					Bearing No.
dyn. C	stat. C_0	grease	oil	-	M	TV	C3	C4	
6330	11600	320	400	◴	◴	↷	◴	◴	**23284 KCW33**
2100	4900	670	850	◴	◴	↷	◴	◴	**23988 KCW33**
3220	6550	430	530	↷	↷	↷	↷	↷	**23088 KCW33**
5180	10000	340	430	◴	↷	↷	↷	↷	**23188 KCW33**
6730	12500	320	400	↷	↷	↷	↷	↷	**23288 KCW33**
4370	9500	340	430	↷	↷	↷	↷	↷	**24092 K30CW33**
5980	12200	170	220	↷	↷	↷	↷	↷	**24188 K30CW33**
2190	5000	430	530	↷	↷	↷	↷	↷	**23992 KCW33**
3450	6950	400	500	↷	↷	↷	↷	↷	**23092 KCW33**
5640	10800	320	440	↷	↷	↷	↷	↷	**23192 KCW33**
7360	13700	300	380	↷	↷	↷	↷	↷	**23292 KCW33**
4490	10000	340	430	↷	↷	↷	↷	↷	**24096 K30CW33**
7250	14600	160	200	↷	↷	↷	↷	↷	**24192 K30CW33**
2530	5700	410	510	↷	↷	↷	↷	↷	**23996 KCW33**
3340	6800	380	480	↷	↷	↷	↷	↷	**23096 KCW33**
6100	12000	300	380	↷	↷	↷	↷	↷	**23196 KCW33**
8170	15000	260	340	↷	↷	↷	↷	↷	**23296 KCW33**
7250	15000	150	190	↷	↷	↷	↷	↷	**24196 K30CW33**
2600	6300	400	500	↷	↷	↷	↷	↷	**239/500 KCW33**
3900	8500	310	410	↷	↷	↷	↷	↷	**230/500 KCW33**
7100	14300	260	350	↷	↷	↷	↷	↷	**231/500 KCW33**
4600	10300	310	410	↷	↷	↷	↷	↷	**240/500 K30CW33**
7710	15900	140	180	↷	↷	↷	↷	↷	**241/500 K30CW33**
8770	16700	230	310	↷	↷	↷	↷	↷	**232/500 KCW33**
2850	6800	360	450	↷	↷	↷	↷	↷	**239/530 KCW33**
4400	9500	280	370	↷	↷	↷	↷	↷	**230/530 KCW33**
5430	12100	280	370	↷	↷	↷	↷	↷	**240/530 K30CW33**
7170	14200	235	315	↷	↷	↷	↷	↷	**231/530 KCW33**
8500	18000	130	165	↷	↷	↷	↷	↷	**241/530 K30CW33**
10500	18900	220	300	↷	↷	↷	↷	↷	**232/530 KCW33**
3100	7650	340	430	↷	↷	↷	↷	↷	**239/560 KCW33**
5100	11000	265	355	↷	↷	↷	↷	↷	**230/560 KCW33**
5970	13300	265	355	↷	↷	↷	↷	↷	**240/560 K30CW33**
7800	15500	225	305	↷	↷	↷	↷	↷	**231/560 KCW33**
8920	18400	120	155	↷	↷	↷	↷	↷	**241/560 K30CW33**
11200	20300	200	280	↷	↷	↷	↷	↷	**232/560 KCW33**
3450	8650	320	400	↷	↷	↷	↷	↷	**239/600 KCW33**
5700	12500	250	330	↷	↷	↷	↷	↷	**230/600 KCW33**
6660	15500	250	330	↷	↷	↷	↷	↷	**240/600 K30CW33**
9040	18400	210	280	↷	↷	↷	↷	↷	**231/600 KCW33**
10200	21600	115	145	↷	↷	↷	↷	↷	**241/600 K30CW33**
12800	24000	190	260	↷	↷	↷	↷	↷	**232/600 KCW33**
4050	9800	280	360	↷	↷	↷	↷	↷	**239/630 KCW33**

* Other products also available



https://nppnovoteh.com

7. SPHERICAL ROLLER BEARINGS

7.3. Spherical roller bearings with withdrawal sleeve



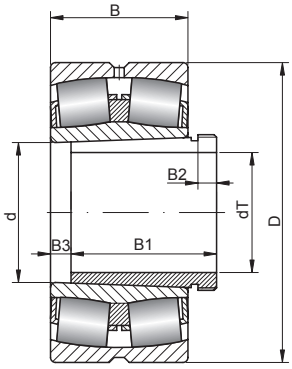

600 – 1060 mm

Shaft [mm]	Bearing No.	Series		Sleeve No.	Dimensions [mm]						Weight [kg]
		SD	SB		d	dT	D	B	B1	B2	
600 cont.	**230/630 KCW33**	0	3	AH30/630	630	600	920	212	14	46	488
	240/630 K30CW33	0	4	AH240/630	630	600	920	290	-	-	650
	231/630 KCW33	1	3	AH31/630	630	600	1030	315	-	-	1040
	241/630 K30CW33	1	4	AH241/630	630	600	1030	400	-	-	1310
	232/630 KCW33	2	3	AH32/630	630	600	1150	412	-	-	1880
630	**239/670 KCW33**	9	3	AH39/670	670	630	900	170	12	41	316
	230/670 KCW33	0	3	AH30/670	670	630	980	230	14	50	590
	240/670 K30CW33	0	4	AH240/670	670	630	980	308	-	-	783
	231/670 KCW33	1	3	AH31/670	670	630	1090	336	-	-	1240
	241/670 K30CW33	1	4	AH241/670	670	630	1090	412	-	-	1500
670	**239/710 KCW33**	9	3	AH39/710	710	670	950	180	12	43	347
	230/710 KCW33	0	3	AH30/710	710	670	1030	236	16	50	652
	240/710 K30CW33	0	4	AH240/710	710	670	1030	315	-	-	872
	231/710 KCW33	1	3	AH31/710	710	670	1150	345	-	-	1400
	241/710 K30CW33	1	4	AH241/710	710	670	1150	438	-	-	1760
710	**239/750 KCW33**	9	3	AH39/750	750	710	1000	185	12	44	418
	230/750 KCW33	0	3	AH30/750	750	710	1090	250	16	50	783
	240/750 K30CW33	0	4	AH240/750	750	710	1090	335	-	-	1040
	231/750 KCW33	1	3	AH31/750	750	710	1220	365	-	-	1670
750	**239/800 KCW33**	9	3	AH39/800	800	750	1060	195	12	45	490
	230/800 KCW33	0	3	AH30/800	800	750	1150	258	18	50	900
	240/800 K30CW33	0	4	AH240/800	800	750	1150	345	-	-	1170
	231/800 KCW33	1	3	AH31/800	800	750	1280	375	-	-	1850
800	**239/850 KCW33**	9	3	AH39/850	850	800	1120	200	12	50	563
	230/850 KCW33	0	3	AH30/850	850	800	1220	272	-	-	1050
	240/850 K30CW33	0	4	AH240/850	850	800	1220	365	-	-	1390
	231/850 KCW33	1	3	AH31/850	850	800	1360	400	-	-	2230
850	**239/900 KCW33**	9	3	AH39/900	900	850	1180	206	12	51	630
	230/900 KCW33	0	3	AH30/900	900	850	1280	280	-	-	1160
	240/900 K30CW33	0	4	AH240/900	900	850	1280	375	-	-	1550
	231/900 KCW33	1	3	AH31/900	900	850	1420	412	-	-	2450
900	**230/950 KCW33**	0	3	AH30/950	950	900	1360	300	-	-	1420
	240/950 K30CW33	0	4	AH240/950	950	900	1360	412	-	-	1940
950	**230/1000 KCW33**	0	3	AH30/1000	1000	950	1420	308	-	-	1570
	240/1000 K30CW33	0	4	AH240/1000	1000	950	1420	412	-	-	2090
1000	**240/1060 K30CW33**	0	4	AH240/1060	1060	1000	1500	438	-	-	2450
1060	**240/1120 K30CW33**	0	4	AH240/1120	1120	1060	1580	462	-	-	2860

- warehouse - order - phone

https://nppnovoteh.com

Basic load ratings [kN]		Limiting speed [rpm]		Basic makes*					Bearing No.
dyn. C	stat. C_0	grease	oil	-	M	TV	C3	C4	
6300	13700	220	300	✓	✓	✓	✓	✓	**230/630 KCW33**
7410	17200	220	300	✓	✓	✓	✓	✓	**240/630 K30CW33**
9610	19500	185	255	✓	✓	✓	✓	✓	**231/630 KCW33**
11600	25000	100	130	✓	✓	✓	✓	✓	**241/630 K30CW33**
14400	27100	180	240	✓	✓	✓	✓	✓	**232/630 KCW33**
4300	10600	260	340	✓	✓	✓	✓	✓	**239/670 KCW33**
7200	16000	205	280	✓	✓	✓	✓	✓	**230/670 KCW33**
8230	19300	205	280	✓	✓	✓	✓	✓	**240/670 K30CW33**
10600	21800	170	240	✓	✓	✓	✓	✓	**231/670 KCW33**
12100	25900	95	125	✓	✓	✓	✓	✓	**241/670 K30CW33**
4800	12000	240	320	✓	✓	✓	✓	✓	**239/710 KCW33**
7650	17000	190	265	✓	✓	✓	✓	✓	**230/710 KCW33**
9050	21500	190	265	✓	✓	✓	✓	✓	**240/710 K30CW33**
11800	24800	160	225	✓	✓	✓	✓	✓	**231/710 KCW33**
14400	31900	85	120	✓	✓	✓	✓	✓	**241/710 K30CW33**
5200	12900	220	300	✓	✓	✓	✓	✓	**239/750 KCW33**
8500	19000	175	250	✓	✓	✓	✓	✓	**230/750 KCW33**
9550	23000	175	250	✓	✓	✓	✓	✓	**240/750 K30CW33**
13300	28000	145	210	✓	✓	✓	✓	✓	**231/750 KCW33**
5850	15000	200	280	✓	✓	✓	✓	✓	**239/800 KCW33**
9300	21200	155	230	✓	✓	✓	✓	✓	**230/800 KCW33**
11200	26900	155	230	✓	✓	✓	✓	✓	**240/800 K30CW33**
13800	29400	130	200	✓	✓	✓	✓	✓	**231/800 KCW33**
6300	16300	190	260	✓	✓	✓	✓	✓	**239/850 KCW33**
9570	22600	150	215	✓	✓	✓	✓	✓	**230/850 KCW33**
12000	30000	150	215	✓	✓	✓	✓	✓	**240/850 K30CW33**
15600	33600	125	185	✓	✓	✓	✓	✓	**231/850 KCW33**
6550	17300	180	250	✓	✓	✓	✓	✓	**239/900 KCW33**
10300	24800	140	205	✓	✓	✓	✓	✓	**230/900 KCW33**
13200	33400	140	205	✓	✓	✓	✓	✓	**240/900 K30CW33**
16800	37100	120	175	✓	✓	✓	✓	✓	**231/900 KCW33**
11500	27700	135	200	✓	✓	✓	✓	✓	**230/950 KCW33**
15200	38300	135	200	✓	✓	✓	✓	✓	**240/950 K30CW33**
12300	30000	125	190	✓	✓	✓	✓	✓	**230/1000 KCW33**
16200	41800	125	190	✓	✓	✓	✓	✓	**240/1000 K30CW33**
17500	45300	120	185	✓	✓	✓	✓	✓	**240/1060 K30CW33**
19600	51000	105	165	✓	✓	✓	✓	✓	**240/1120 K30CW33**

* Other products also available



https://nppnovoteh.com

8. THRUST BALL BEARINGS

ROLLING BEARINGS

ŁOZYSKA TOCZNE



WALZLAGER



CUSCINETTI

ŁOZYSKA TOC

TABLES:

8. THRUST BALL BEARINGS
8.1. Single-direction thrust ball bearings
8.2. Double- direction thrust ball bearings
8.3. Spherical washers for thrust ball bearings

INTRODUCTION:

8. Single-direction and double-direction thrust ball bearings

8.1. Dimension series

- **511.. 512.. 513.. 514..** - single-direction single-row
- **532..533..534..** – single-direction single-row, one spherical outer ring
- **522..523..524..** – double-direction double-row
- **542..543..544..** – double-direction double-row – both outer rings are spherical

With a bearing version equipped with a spherical ring or rings we use spherical washers of the following series:

- **U2.. U3.. U4..**

If we provide the washer's designation together with bearing symbol, we add "U" at the end of the symbol.

If the washer is an individual part, we quote U2..or U3.. and then the symbol of the inside diameter, e.g. a bearing with a washer: **53209 U**, a washer alone: **U209**.



Fig.32 Single-row single-direction thrust ball bearing with a spherical washer

8.2. Dimensional accuracy

Standard accuracy class for thrust ball bearings is the P0 normal class. Most types are also available in the P6 and also in P5 accuracy classes.

8.3. Structure

All types of thrust ball bearings are detachable. Single-direction thrust ball bearings consist of an inner ring mounted on the shaft, and outer ring seated in the bearing mounting and a cage with balls. Double-direction bearings consist of an inner ring mounted on the shaft, and two outer rings seated in the bearing mounting and two cages with balls. Outer rings of thrust ball bearings can have alternatively either flat or spherical mounting surface.

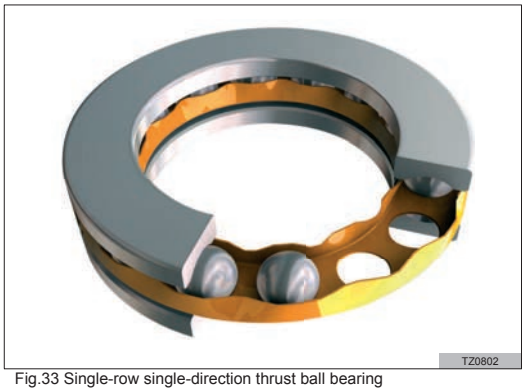

Fig.33 Single-row single-direction thrust ball bearing

8.4. Cages

Cages of thrust ball bearings are made of steel, sometimes of brass, especially in case of larger bearings.

8.5. Features

Thrust ball bearings are designed for supporting substantial axial load, however they cannot accommodate strictly radial load. Thrust ball bearings must be always subject to axial load because of centrifugal and gyroscopic forces occurring during rotation, whereas axial load should be at least three times the radial load. Minimal axial load values or corresponding initial grips can be calculated according to the formula shown below:

$$F_{a\min} \geq M\left(\frac{n}{1000}\right)^2$$

where F_{amin} - means minimal axial load [N],

M – coefficient of minimal load, the value of which is quoted in dimensional bearing tables,

n – rotational speed of a bearing [revolutions per minute].

https://nppnovoteh.com

Axial load resulting from weight of elements leaning on the bearing and some external forces is usually higher than required minimal load. Otherwise the bearings should be subject of initial stress (e.g. with springs).

Single-direction bearings carry axial load in one direction, and double-direction bearings carry axial load in both directions.

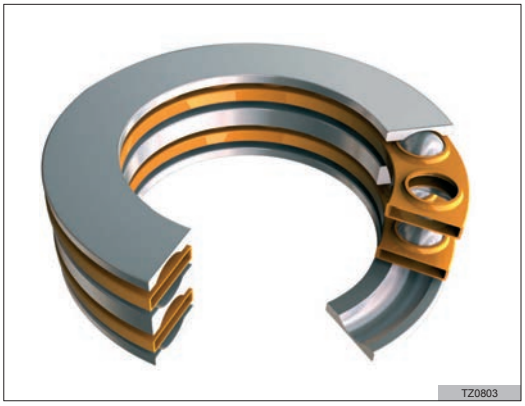

Fig.34 Double-row double-direction thrust ball bearing

8.6. Misalignment

Thrust ball bearings with flat outer rings prevent any misalignment between the shaft and the bearing mounting from occurring. Bearings with spherical mount surface of the outer ring enable compensation of misalignment with the help of spherical washer with spherical concave surface or directly with spherical bearing seating.

8.7. Application

As the simplest type of bearings, the thrust ball bearings are widely applied in all branches of industry.

Simple construction, low price and the ability to carry considerable axial loads resulting from their construction puts the thrust ball bearings in the first row of all thrust bearings. Agriculture and machine-building industry are basic consumers of this bearing type.

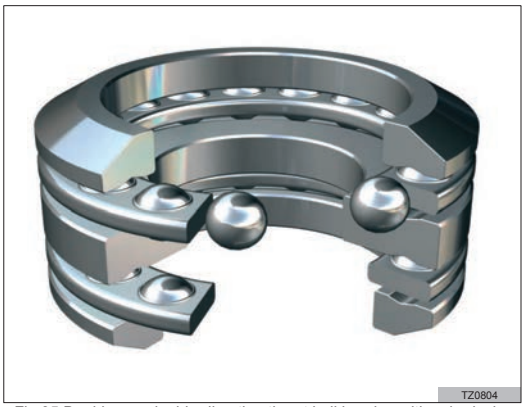

Fig.35 Double-row double-direction thrust ball bearing with spherical outer rings

8.8.Replaceability of parts of thrust ball bearings

Whereas the designation method of angular-contact thrust ball bearings, because of irreplaceability of individual parts, brings no special problems with it, some problems may arise with the thrust ball bearings - with proper interpreting the symbol of a bearing.

It involves replaceability of individual parts of bearings. To put it simply, some bearing elements of a given type can be used in bearings of another type.

It enhances considerably construction possibilities but on the other hand it somewhat impedes the designation system. The symbol of the bearing is always unambiguous, it defines clearly what elements the given bearing is to consist of, but the designation of individual elements may be not so clear.

The diagram presented below shows the construction principles of individual types. Elements that are marked with the same letters are identical and replaceable. Rolling elements' cages marked with circles in the diagram are identical with all series. When analyzing similarities one shall consider bearings with the same series of diameters and widths. The main difficulty is that some manufacturers introduce abbreviations to mark elements shared by different types of bearings. The abbreviation consists in omitting the digit that means the width of the series.

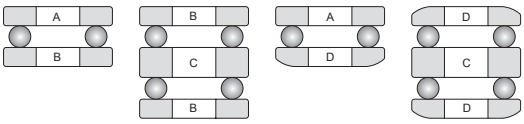

51.. 52.. 53.. 54..

https://nppnovoteh.com

https://nppnovoteh.com

8. THRUST BALL BEARINGS

8.1. Single-direction thrust ball bearings





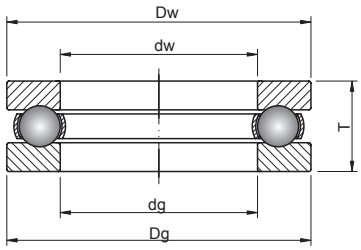

511.. 512.. 513.. 514..

10 – 35 mm

Shaft [mm]	Bearing No.	Spherical washer U...	Series		Dimensions [mm]								Weight [kg]
			SD	ST	dw	dg	Dw	Dg	du	Du	T	Tu	
10	**51100**	-	1	1	10	11	24	24	-	-	9	-	0,0200
	53200	-	2	3	10	12	26	26	-	-	11,6	-	0,0290
	53200 U	U200	2	3	10	12	26	26	18	28	11,6	13	0,0400
	51200	-	2	1	10	12	26	26	-	-	11	-	0,0310
12	**51101**	-	1	1	12	13	26	26	-	-	9	-	0,0220
	51201	-	2	1	12	14	28	28	-	-	11	-	0,0340
	53201	-	2	3	12	14	28	28	-	-	11,4	-	0,0310
	53201 U	U201	2	3	12	14	28	28	20	30	11,4	13	0,0450
15	**51102**	-	1	1	15	16	28	28	-	-	9	-	0,0230
	51202	-	2	1	15	17	32	32	-	-	12	-	0,0460
	53202	-	2	3	15	17	32	32	-	-	13,3	-	0,0480
	53202 U	U202	2	3	15	17	32	32	24	35	13,3	15	0,0630
17	**51103**	-	1	1	17	18	30	30	-	-	9	-	0,0250
	51203	-	2	1	17	19	35	35	-	-	12	-	0,0530
	53203	-	2	3	17	19	35	35	-	-	13,2	-	0,0550
	53203 U	U203	2	3	17	19	35	35	26	38	13,2	15	0,0710
20	**51104**	-	1	1	20	21	35	35	-	-	10	-	0,0380
	51204	-	2	1	20	22	40	40	-	-	14	-	0,0830
	53204	-	2	3	20	22	40	40	-	-	14,7	-	0,0800
	53204 U	U204	2	3	20	22	40	40	30	42	14,7	17	0,1020
25	**51105**	-	1	1	25	26	42	42	-	-	11	-	0,0560
	51205	-	2	1	25	27	47	47	-	-	15	-	0,1100
	53205	-	2	3	25	27	47	47	-	-	16,7	-	0,1200
	53205 U	U205	2	3	25	27	47	47	36	50	16,7	19	0,1540
	51305	-	3	1	25	27	52	52	-	-	18	-	0,1700
	53305	-	3	3	25	27	52	52	-	-	19,8	-	0,1800
	53305 U	U305	3	3	25	27	52	52	38	55	19,8	22	0,2200
	51405	-	4	1	25	27	60	60	-	-	24	-	0,3400
	53405	-	4	3	25	27	60	60	-	-	26,4	-	0,3500
	53405 U	U405	4	3	25	27	60	60	42	62	26,4	29	0,4420
30	**51106**	-	1	1	30	32	47	47	-	-	11	-	0,0630
	51206	-	2	1	30	32	52	52	-	-	16	-	0,1300
	53206	-	2	3	30	32	52	52	-	-	17,8	-	0,1600
	53206 U	U206	2	3	30	32	52	52	42	55	17,8	20	0,1980
	51306	-	3	1	30	32	60	60	-	-	21	-	0,2600
	53306	-	3	3	30	32	60	60	-	-	22,6	-	0,2700
	53306 U	U306	3	3	30	32	60	60	45	62	22,6	25	0,3220
	51406	-	4	1	30	32	70	70	-	-	28	-	0,5200
	53406	-	4	3	30	32	70	70	-	-	30,1	-	0,5300
	53406 U	U406	4	3	30	32	70	70	50	75	30,1	33	0,6600
35	**51107**	-	1	1	35	37	52	52	-	-	12	-	0,0800
	51207	-	2	1	35	37	62	62	-	-	18	-	0,2200
	53207	-	2	3	35	37	62	62	-	-	19,9	-	0,2200
	53207 U	U207	2	3	35	37	62	62	48	65	19,9	22	0,2790
	51307	-	3	1	35	37	68	68	-	-	24	-	0,3800
	53307	-	3	3	35	37	68	68	-	-	25,6	-	0,4000
	53307 U	U307	3	3	35	37	68	68	52	72	25,6	28	0,4630
	51407	-	4	1	35	37	80	80	-	-	32	-	0,7600
	53407	-	4	3	35	37	80	80	-	-	34	-	0,7900
	53407 U	U307	4	5	35	37	80	80	58	85	34	37	0,9600

- warehouse - order - phone

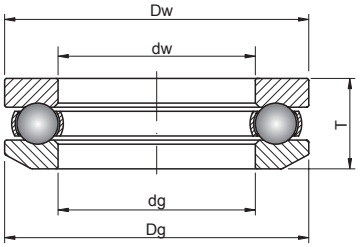

532.. 533.. 534..

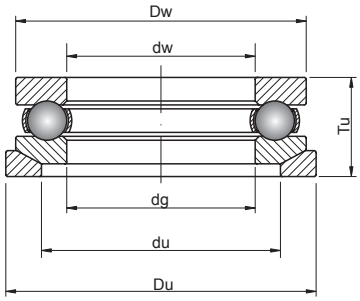

532..U 533..U 534..U

Basic load ratings [kN]		Limiting speed [rpm]		Basic makes*					Bearing No.
dyn. C	stat. C_0	grease	oil	-	M	TN	P6	P5	
10	14	6500	10000						**51100**
12,7	17,1	5700	8800						**53200**
12,7	17,1	5700	8800						**53200 U**
12,7	17	6000	8000						**51200**
10,4	15,3	6700	9000						**51101**
13,3	19	6000	8000						**51201**
13,2	19	5400	8300						**53201**
13,2	19	5400	8300						**53201 U**
9,36	14	6300	8500						**51102**
16,5	25	5300	7000						**51202**
16,6	24,8	4900	7500						**53202**
16,6	24,8	4900	7500						**53202 U**
9,75	15,3	6300	8500						**51103**
17,2	27,5	5000	6700						**51203**
17,2	27,3	4900	7500						**53203**
17,2	27,3	4900	7500						**53203 U**
12,7	20,8	5600	7500						**51104**
22,5	37,5	4500	6000						**51204**
22,3	37,7	3900	6000						**53204**
22,3	37,7	3900	6000						**53204 U**
15,9	29	4800	6300						**51105**
27,6	50	4000	5300						**51205**
27,8	50,4	3600	5500						**53205**
27,8	50,4	3600	5500						**53205 U**
34,5	55	3400	4500						**51305**
35,7	614	3100	4800						**53305**
35,7	614	3100	4800						**53305 U**
55,3	90	2600	3600						**51405**
55,6	89,4	2600	4000						**53405**
55,6	89,4	2600	4000						**53405 U**
16,8	33,5	4500	6000						**51106**
25,5	47,5	3600	4800						**51206**
29,3	58,2	3400	5200						**53206**
29,3	58,2	3400	5200						**53206 U**
37,7	65,5	2800	3800						**51306**
42,8	78,7	2700	4200						**53306**
42,8	78,7	2700	4200						**53306 U**
72,8	125	2000	3000						**51406**
72,8	126	2200	3400						**53406**
72,8	126	2200	3400						**53406 U**
17,4	37,5	4300	5600						**51107**
35,1	67	3000	4000						**51207**
39,2	78,2	2900	4500						**53207**
39,2	78,2	2900	4500						**53207 U**
49,4	88	2400	3400						**51307**
55,5	105	2400	3700						**53307**
55,5	105	2400	3700						**53307 U**
87,1	156	1800	2600						**51407**
87,1	155	1900	2900						**53407**
87,1	155	1900	2900						**53407 U**

* Other products also available

https://nppnovoteh.com

8. THRUST BALL BEARINGS

8.1. Single-direction thrust ball bearings





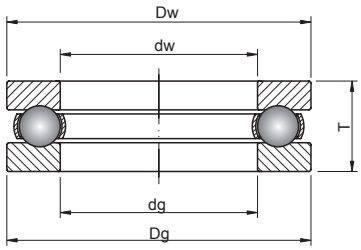

511.. 512.. 513.. 514..

35 – 60 mm

Shaft [mm]	Bearing No.	Spherical washer U...	Series		Dimensions [mm]								Weight [kg]
			SD	ST	dw	dg	Dw	Dg	du	Du	T	Tu	
35 cont.	**53407 U**	U407	4	3	35	37	80	80	58	85	34	37	0,9600
40	**51108**	-	1	1	40	42	60	60	-	-	13	-	0,1200
	51208	-	2	1	40	42	68	68	-	-	19	-	0,2800
	53208	-	2	3	40	42	68	68	-	-	20,3	-	0,2700
	53208 U	U208	2	3	40	42	68	68	55	72	20,3	23	0,3360
	51308	-	3	1	40	42	78	78	-	-	26	-	0,5300
	53308	-	3	3	40	42	78	78	-	-	28,5	-	0,5700
	53308 U	U308	3	3	40	42	78	78	60	82	28,5	31	0,6730
	51408	-	4	1	40	42	90	90	-	-	36	-	1,1000
	53408	-	4	3	40	42	90	90	-	-	38,2	-	1,1200
	53408 U	U408	4	3	40	42	90	90	65	95	38,2	42	1,3700
45	**51109**	-	1	1	45	47	65	65	-	-	14	-	0,1400
	51209	-	2	1	45	47	73	73	-	-	20	-	0,3000
	53209	-	2	3	45	47	73	73	-	-	21,3	-	0,3100
	53209 U	U209	2	3	45	47	73	73	60	78	21,3	24	0,3880
	51309	-	3	1	45	47	85	85	-	-	28	-	0,6600
	53309	-	3	3	45	47	85	85	-	-	30,1	-	0,6800
	53309 U	U309	3	3	45	47	85	85	65	90	30,1	33	0,8300
	51409	-	4	1	45	47	100	100	-	-	39	-	1,4000
	53409	-	4	3	45	47	100	100	-	-	42,4	-	1,5000
	53409 U	U409	4	3	45	47	100	100	72	105	42,4	46	1,8200
50	**51110**	-	1	1	50	52	70	70	-	-	14	-	0,1600
	51210	-	2	1	50	52	78	78	-	-	22	-	0,3700
	53210	-	2	3	50	52	78	78	-	-	23,5	-	0,3800
	53210 U	U210	2	3	50	52	78	78	62	82	23,5	26	0,4640
	51310	-	3	1	50	52	95	95	-	-	31	-	0,9400
	53310	-	3	3	50	52	95	95	-	-	34,3	-	1,0100
	53310 U	U310	3	3	50	52	95	95	72	100	34,3	37	1,2020
	51410	-	4	1	50	52	110	110	-	-	43	-	2,0000
	53410	-	4	3	50	52	110	110	-	-	45,6	-	1,9700
	53410 U	U410	4	3	50	52	110	110	80	115	45,6	50	2,3800
55	**51111**	-	1	1	55	57	78	78	-	-	16	-	0,2300
	51211	-	2	1	55	57	90	90	-	-	25	-	0,5900
	53211	-	2	3	55	57	90	90	-	-	27,3	-	0,6200
	53211 U	U211	2	3	55	57	90	90	72	95	27,3	30	0,7520
	51311	-	3	1	55	57	105	105	-	-	35	-	1,3000
	53311	-	3	3	55	57	105	105	-	-	39,3	-	1,4100
	53311 U	U311	3	3	55	57	105	105	80	110	39,3	42	1,6600
	51411	-	4	1	55	57	120	120	-	-	48	-	2,5500
	53411	-	4	3	55	57	120	120	-	-	50,5	-	2,5700
	53411 U	U411	4	3	55	57	120	120	88	125	50,5	55	3,1000
60	**51112**	-	1	1	60	62	85	85	-	-	17	-	0,2000
	51212	-	2	1	60	62	95	95	-	-	26	-	0,6500
	53212	-	2	3	60	62	95	95	-	-	28	-	0,6900
	53212 U	U212	2	3	60	62	95	95	78	100	28	31	0,8170
	51312	-	3	1	60	62	110	110	-	-	35	-	1,3500
	53312	-	3	3	60	62	110	110	-	-	38,3	-	1,4700
	53312 U	U312	3	3	60	62	110	110	85	115	38,3	42	1,7200
	51412	-	4	1	60	62	130	130	-	-	51	-	3,1000
	53412	-	4	3	60	62	130	130	-	-	54	-	3,4400
	53412 U	U412	4	3	60	62	130	130	95	135	54	58	4,1300

- warehouse - order - phone

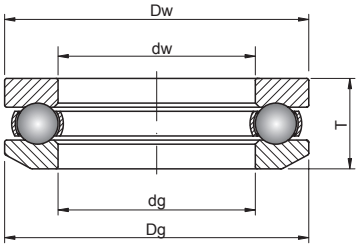

532.. 533.. 534..

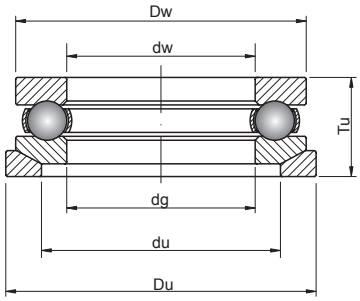

532..U 533..U 534..U

Basic load ratings [kN]		Limiting speed [rpm]		Basic makes*					Bearing No.
dyn. C	stat. C_0	grease	oil	-	M	TN	P6	P5	
87,1	155	1900	2900						**53407 U**
23,4	50	3800	5000						**51108**
46,8	98	2800	3800						**51208**
46,9	98,3	2700	4200						**53208**
46,9	98,3	2700	4200						**53208 U**
61,8	112	2000	3000						**51308**
69,3	135	2100	3300						**53308**
69,3	135	2100	3300						**53308 U**
112	204	1700	2400						**51408**
113	205	1700	2600						**53408**
113	205	1700	2600						**53408 U**
24,2	57	3400	4500						**51109**
39	80	2600	3600						**51209**
47,7	105	2600	4000						**53209**
47,7	105	2600	4000						**53209 U**
76,1	140	1900	2800						**51309**
80	163	1900	3000						**53309**
80	163	1900	3000						**53309 U**
130	240	1600	2200						**51409**
130	242	1500	2300						**53409**
130	242	1500	2300						**53409 U**
25,5	63	3200	4300						**51110**
49,4	106	2400	3400						**51210**
48,5	111	2300	3600						**53210**
48,5	111	2300	3600						**53210 U**
88,4	173	1800	2600						**51310**
91,6	186	1800	2700						**53310**
91,6	186	1800	2700						**53310 U**
159	310	1500	2000						**51410**
148	283	1400	2100						**53410**
148	283	1400	2100						**53410 U**
30,7	78	2800	3800						**51111**
61,8	134	1900	2800						**51211**
69,4	159	2100	3200						**53211**
69,4	159	2100	3200						**53211 U**
104	208	1600	2200						**51311**
119	246	1600	2400						**53311**
119	246	1600	2400						**53311 U**
178	360	1300	1800						**51411**
178	359	1200	1900						**53411**
178	359	1200	1900						**53411 U**
35,8	90	2600	3600						**51112**
62,4	140	1900	2800						**51212**
73,6	179	1900	3000						**53212**
73,6	179	1900	3000						**53212 U**
101	208	1600	2200						**51312**
124	267	1500	2300						**53312**
124	267	1500	2300						**53312 U**
199	400	1100	1600						**51412**
201	397	1100	1700						**53412**
201	397	1100	1700						**53412 U**

* Other products also available

https://nppnovoteh.com

8. THRUST BALL BEARINGS

8.1. Single-direction thrust ball bearings



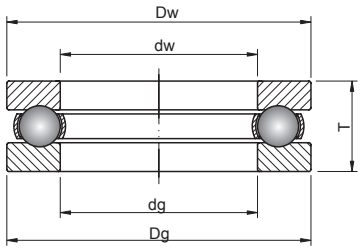

511.. 512.. 513.. 514..

65 – 90 mm

Shaft [mm]	Bearing No.	Spherical washer U...	Series		Dimensions [mm]								Weight [kg]
			SD	ST	dw	dg	Dw	Dg	du	Du	T	Tu	
65	**51113**	-	1	1	65	67	90	90	-	-	18	-	0,3300
	51213	-	2	1	65	67	100	100	-	-	27	-	0,7800
	53213	-	2	3	65	67	100	100	-	-	28,7	-	0,7500
	53213 U	U213	2	3	65	67	100	100	82	105	28,7	32	0,9120
	51313	-	3	1	65	67	115	115	-	-	36	-	1,5000
	53313	-	3	3	65	67	115	115	-	-	39,4	-	1,6100
	53313 U	U313	3	3	65	67	115	115	90	120	39,4	43	1,8700
	51413	-	4	1	65	68	140	140	-	-	56	-	4,0000
	53413	-	4	3	65	68	140	140	-	-	60,2	-	4,4700
	53413 U	U413	4	3	65	68	140	140	100	145	60,2	65	5,2800
70	**51114**	-	1	1	70	72	95	95	-	-	18	-	0,3500
	51214	-	2	1	70	72	105	105	-	-	27	-	0,7900
	53214	-	2	3	70	72	105	105	-	-	28,8	-	0,8000
	53214 U	U214	2	3	70	72	105	105	88	110	28,8	32	0,9670
	51314	-	3	1	70	72	125	125	-	-	40	-	2,0000
	53314	-	3	3	70	72	125	125	-	-	44,2	-	2,1500
	53314 U	U314	3	3	70	72	125	125	98	130	44,2	48	2,5100
	51414	-	4	1	70	73	150	150	-	-	60	-	5,0000
	53414	-	4	3	70	73	150	150	-	-	63,6	-	5,3800
	53414 U	U414	4	3	70	73	150	150	110	155	63,6	69	6,3700
75	**51115**	-	1	1	75	77	100	100	-	-	19	-	0,4000
	51215	-	2	1	75	77	110	110	-	-	27	-	0,8300
	53215	-	2	3	75	77	110	110	-	-	28,3	-	0,8500
	53215 U	U215	2	3	75	77	110	110	92	115	28,3	32	1,0180
	51315	-	3	1	75	77	135	135	-	-	44	-	2,6000
	53315	-	3	3	75	77	135	135	-	-	48,1	-	2,7200
	53315 U	U315	3	3	75	77	135	135	105	140	48,1	52	3,2200
	51415	-	4	1	75	78	160	160	-	-	65	-	6,7500
	53415	-	4	3	75	78	160	160	-	-	69	-	6,6400
	53415 U	U415	4	3	75	78	160	160	115	165	69	75	7,8700
80	**51116**	-	1	1	80	82	105	105	-	-	19	-	0,4200
	51216	-	2	1	80	82	115	115	-	-	28	-	0,9100
	53216	-	2	3	80	82	115	115	-	-	29,5	-	0,9300
	53216 U	U216	2	3	80	82	115	115	98	120	29,5	33	1,1180
	51316	-	3	1	80	82	140	140	-	-	44	-	2,7000
	53316	-	3	3	80	82	140	140	-	-	47,6	-	2,8600
	53316 U	U316	3	3	80	82	140	140	110	145	47,6	52	3,3400
	51416	-	4	1	80	83	170	170	-	-	68	-	7,9500
	53416	-	4	3	80	83	170	170	-	-	72,2	-	7,8400
	53416 U	U416	4	3	80	83	170	170	125	175	72,2	78	9,2200
85	**51117**	-	1	1	85	87	110	110	-	-	19	-	0,4400
	51217	-	2	1	85	88	125	125	-	-	31	-	1,2000
	53217	-	2	3	85	88	125	125	-	-	33,1	-	1,2800
	53217 U	U217	2	3	85	88	125	125	105	130	33,1	37	1,5100
	51317	-	3	1	85	88	150	150	-	-	49	-	3,5500
	53317	-	3	3	85	88	150	150	-	-	53,1	-	3,6300
	53317 U	U317	3	3	85	88	150	150	115	155	53,1	58	4,3400
	51417	-	4	1	85	88	177	180	-	-	72	-	9,2900
	53417	-	4	3	85	88	180	180	-	-	77	-	9,2000
	53417 U	U417	4	3	85	88	180	180	130	185	77	83	10,8000
90	**51118**	-	1	1	90	92	120	120	-	-	22	-	0,6700

- warehouse - order - phone

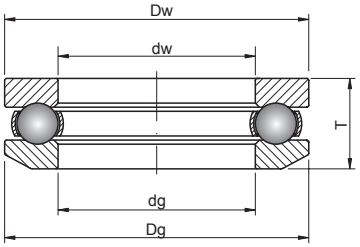

532.. 533.. 534..

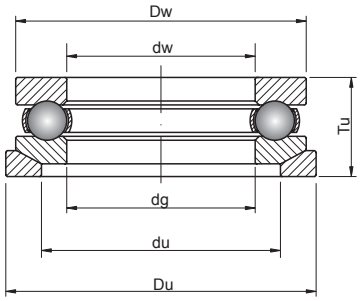

532..U 533..U 534..U

Basic load ratings [kN]		Limiting speed [rpm]		Basic makes*					Bearing No.
dyn. C	stat. C_0	grease	oil	-	M	TN	P6	P5	
37,1	98	2400	3400	●	◔	◔	◔	◔	**51113**
63,7	150	1800	2600	●	◔	◔	◔	◔	**51213**
74,8	189	1900	2900	◴	◔	◔	◔	◔	**53213**
74,8	189	1900	2900	◴	◔	◔	◔	◔	**53213 U**
106	220	1500	2000	●	◔	◔	◔	◔	**51313**
128	287	1400	2200	◴	◔	◔	◔	◔	**53313**
128	287	1400	2200	◴	◔	◔	◔	◔	**53313 U**
216	450	1000	1500	◔	◔	◔	◔	◔	**51413**
232	493	1000	1600	◔	◔	◔	◔	◔	**53413**
232	493	1000	1600	◔	◔	◔	◔	◔	**53413 U**
37,7	104	2400	3400	●	◴	◔	◔	◔	**51114**
65	160	1800	2600	●	◔	◔	◔	◔	**51214**
43	127	2300	3600	◴	◔	◔	◔	◔	**53214**
43	127	2300	3600	◴	◔	◔	◔	◔	**53214 U**
135	300	1400	1900	●	◔	◔	◔	◔	**51314**
148	339	1300	2000	◴	◔	◔	◔	◔	**53314**
148	339	1300	2000	◴	◔	◔	◔	◔	**53314 U**
234	500	950	1400	◔	◔	◔	◔	◔	**51414**
250	553	940	1450	◔	◔	◔	◔	◔	**53414**
250	553	940	1450	◔	◔	◔	◔	◔	**53414 U**
44,2	137	2200	3200	●	◴	◔	◔	◔	**51115**
67,6	170	1700	2400	●	◴	◔	◔	◔	**51215**
77,4	209	1800	2700	◴	◴	◔	◔	◔	**53215**
77,4	209	1800	2700	◴	◴	◔	◔	◔	**53215 U**
163	360	1200	1700	●	◴	◔	◔	◔	**51315**
171	396	1200	1900	◴	◴	◔	◔	◔	**53315**
171	396	1200	1900	◴	◴	◔	◔	◔	**53315 U**
251	560	900	1300	◔	◔	◔	◔	◔	**51415**
252	560	880	1350	◔	◔	◔	◔	◔	**53415**
252	560	880	1350	◔	◔	◔	◔	◔	**53415 U**
44,9	140	2000	3000	●	◴	◔	◔	◔	**51116**
76,1	190	1700	2400	●	◴	◔	◔	◔	**51216**
78,5	218	1700	2600	◴	◴	◔	◔	◔	**53216**
78,5	218	1700	2600	◴	◴	◔	◔	◔	**53216 U**
159	360	1200	1700	●	◴	◔	◔	◔	**51316**
176	424	1200	1800	◴	◴	◔	◔	◔	**53316**
176	424	1200	1800	◴	◴	◔	◔	◔	**53316 U**
270	620	850	1200	◔	◔	◔	◔	◔	**51416**
270	621	810	1250	◔	◔	◔	◔	◔	**53416**
270	621	810	1250	◔	◔	◔	◔	◔	**53416 U**
46,2	150	2000	3000	●	◴	◔	◔	◔	**51117**
97,5	250	1600	2200	●	◴	◔	◔	◔	**51217**
92,3	251	1500	2300	◴	◴	◔	◔	◔	**53217**
92,3	251	1500	2300	◴	◴	◔	◔	◔	**53217 U**
190	425	1100	1600	●	◴	◔	◔	◔	**51317**
206	489	1100	1700	◴	◴	◔	◔	◔	**53317**
206	489	1100	1700	◴	◴	◔	◔	◔	**53317 U**
307	753	780	1200	◔	◔	◔	◔	◔	**51417**
307	753	780	1200	◔	◔	◔	◔	◔	**53417**
307	753	780	1200	◔	◔	◔	◔	◔	**53417 U**
59,2	190	1800	2600	●	◴	◔	◔	◔	**51118**

* Other products also available



https://nppnovoteh.com

8. THRUST BALL BEARINGS

8.1. Single-direction thrust ball bearings





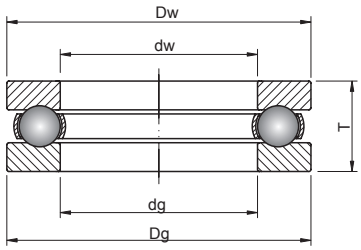

511.. 512.. 513.. 514..

90 – 140 mm

Shaft [mm]	Bearing No.	Spherical washer U...	Series		Dimensions [mm]								Weight [kg]
			SD	ST	dw	dg	Dw	Dg	du	Du	T	Tu	
90 cont.	**51218**	-	2	1	90	93	135	135	-	-	35	-	1,7000
	53218	-	2	3	90	93	135	135	-	-	38,5	-	1,7700
	53218 U	U218	2	3	90	93	135	135	110	140	38,5	42	2,1200
	51318	-	3	1	90	93	155	155	-	-	50	-	3,8000
	53318	-	3	3	90	93	155	155	-	-	54,6	-	3,8700
	53318 U	U318	3	3	90	93	155	155	120	160	54,6	59	4,6700
	51418	-	4	1	90	93	187	190	-	-	77	-	11,0000
	53418	-	4	3	90	93	190	190	-	-	81,2	-	10,7000
	53418 U	U418	4	3	90	93	190	190	140	195	81,2	88	12,6000
100	**51120**	-	1	1	100	102	135	135	-	-	25	-	0,9700
	51220	-	2	1	100	103	150	150	-	-	38	-	2,2000
	53220	-	2	3	100	103	150	150	-	-	40,9	-	2,3400
	53220 U	U220	2	3	100	103	150	150	125	155	40,9	45	2,7200
	51320	-	3	1	100	103	170	170	-	-	55	-	4,9500
	53320	-	3	3	100	103	170	170	-	-	59,2	-	5,1000
	53320 U	U320	3	3	100	103	170	170	135	175	59,2	64	5,9300
	51420	-	4	1	100	103	205	210	-	-	85	-	14,6000
	53420	-	4	3	100	103	210	210	-	-	90	-	14,5000
	53420 U	U420	4	3	100	103	210	210	155	220	90	98	17,4000
110	**51122**	-	1	1	110	112	145	145	-	-	25	-	1,0500
	51222	-	2	1	110	113	160	160	-	-	38	-	2,4000
	53222	-	2	3	110	113	160	160	-	-	40,2	-	2,5000
	53222 U	U222	2	3	110	113	160	160	135	165	40,2	45	2,9300
	51322	-	3	1	110	113	190	190	-	-	63	-	7,8500
	53322	-	3	3	110	113	190	190	-	-	67,2	-	7,6300
	53322 U	U322	3	3	110	113	190	190	150	195	67,2	72	9,1100
	51422	-	4	1	110	113	225	230	-	-	95	-	19,8000
120	**51124**	-	1	1	120	122	155	155	-	-	25	-	1,1500
	51224	-	2	1	120	123	170	170	-	-	39	-	2,6500
	53224	-	2	3	120	123	170	170	-	-	40,8	-	2,8100
	53224 U	U224	2	3	120	123	170	170	145	175	40,8	46	3,2200
	51324	-	3	1	120	123	205	210	-	-	70	-	11,0000
	53324	-	3	3	120	123	205	210	-	-	74,1	-	10,4000
	53324 U	U324	3	3	120	123	205	210	165	220	74,1	80	12,7000
	51424	-	4	1	120	123	245	250	-	-	102	-	25,0000
130	**51126**	-	1	1	130	132	170	170	-	-	30	-	1,8500
	51226	-	2	1	130	133	187	190	-	-	45	-	4,0000
	53226	-	2	3	130	133	187	190	-	-	47,9	-	3,9800
	53226 U	U226	2	3	130	133	187	190	160	195	47,9	53	4,8300
	51326	-	3	1	130	134	220	225	-	-	75	-	13,0000
	53326	-	3	3	130	134	220	225	-	-	80,3	-	12,7000
	53326 U	U326	3	3	130	134	220	225	177	235	80,3	86	15,2000
	51426	-	4	1	130	134	265	270	-	-	110	-	31,4000
140	**51128**	-	1	1	140	142	178	180	-	-	31	-	2,0500
	51228	-	2	1	140	143	197	200	-	-	46	-	4,3500
	53228	-	2	3	140	143	197	200	-	-	48,6	-	4,3500
	53228 U	U228	2	3	140	143	197	200	170	210	48,6	55	5,4900
	51328	-	3	1	140	144	235	240	-	-	80	-	15,5000
	53328	-	3	3	140	144	235	240	-	-	84,9	-	15,1000
	53328 U	U328	3	3	140	144	235	240	190	250	84,9	92	18,0000
	51428	-	4	1	140	144	280	280	-	-	112	-	33,9000

- warehouse - order - phone

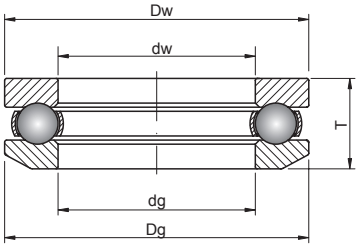

532.. 533.. 534..

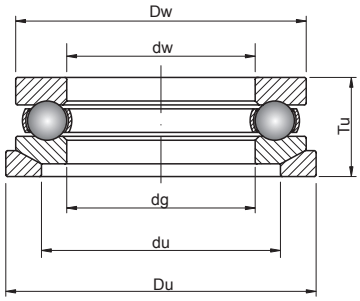

532..U 533..U 534..U

Basic load ratings [kN]		Limiting speed [rpm]		Basic makes*					Bearing No.
dyn. C	stat. C_0	grease	oil	-	M	TN	P6	P5	
119	300	1500	2000						**51218**
117	326	1400	2100						**53218**
117	326	1400	2100						**53218 U**
195	465	1000	1500						**51318**
213	524	1000	1600						**53318**
213	524	1000	1600						**53318 U**
327	826	710	1100						**51418**
327	826	710	1100						**53418**
327	826	710	1100						**53418 U**
85,2	270	1700	2400						**51120**
124	320	1300	1800						**51220**
147	410	1200	1900						**53220**
147	410	1200	1900						**53220 U**
229	560	950	1400						**51320**
236	596	940	1450						**53320**
236	596	940	1450						**53320 U**
368	983	620	950						**51420**
368	983	620	950						**53420**
368	983	620	950						**53420 U**
87,1	290	1600	2200						**51122**
130	360	1200	1700						**51222**
148	431	1200	1800						**53222**
148	431	1200	1800						**53222 U**
276	720	850	1200						**51322**
280	754	810	1250						**53322**
280	754	810	1250						**53322 U**
379	1070	550	850						**51422**
88,4	310	1600	2200						**51124**
140	400	1100	1600						**51224**
154	472	1100	1700						**53224**
154	472	1100	1700						**53224 U**
325	915	800	1100						**51324**
325	931	710	1100						**53324**
325	931	710	1100						**53324 U**
480	1460	520	800						**51424**
111	390	1400	1900						**51126**
186	540	950	1400						**51226**
203	622	970	1500						**53226**
203	622	970	1500						**53226 U**
358	1060	750	1000						**51326**
346	1030	650	1000						**53326**
346	1030	650	1000						**53326 U**
498	1540	490	750						**51426**
111	400	1300	1800						**51128**
190	570	950	1400						**51228**
215	669	940	1450						**53228**
215	669	940	1450						**53228 U**
397	1220	700	950						**51328**
367	1130	620	950						**53328**
367	1130	620	950						**53328 U**
520	1680	450	700						**51428**

* Other products also available

https://nppnovoteh.com

8. THRUST BALL BEARINGS

8.1. Single-direction thrust ball bearings





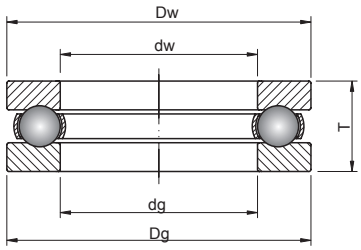

511.. 512.. 513.. 514..

150 – 220 mm

Shaft [mm]	Bearing No.	Spherical washer U...	Series		Dimensions [mm]								Weight [kg]
			SD	ST	dw	dg	Dw	Dg	du	Du	T	Tu	
150	**51130**	-	1	1	150	152	188	190	-	-	31	-	2,2000
	51230	-	2	1	150	153	212	215	-	-	50	-	6,1000
	53230	-	2	3	150	153	212	215	-	-	53,3	-	5,4500
	53230 U	U230	2	3	150	153	212	215	180	225	53,3	60	7,1400
	51330	-	3	1	150	154	245	250	-	-	80	-	16,5000
	53330	-	3	3	150	154	245	250	-	-	83,7	-	15,7000
	53330 U	U330	3	3	150	154	245	250	200	260	83,7	92	19,5000
	51430	-	4	1	150	154	295	300	-	-	120	-	41,6000
160	**51132**	-	1	1	160	162	198	200	-	-	31	-	2,3500
	51232	-	2	1	160	163	222	225	-	-	51	-	6,5500
	53232	-	2	3	160	163	222	225	-	-	54,7	-	6,0900
	53232 U	U232	2	3	160	163	222	225	190	235	54,7	61	8,2500
	51332	-	3	1	160	164	265	270	-	-	87	-	21,0000
	53332	-	3	3	160	164	265	270	-	-	91,7	-	21,0000
	53332 U	U332	3	3	160	164	265	270	215	280	91,7	100	23,4000
	51432	-	4	1	160	164	315	320	-	-	130	-	51,2000
170	**51134**	-	1	1	170	172	213	215	-	-	34	-	3,3000
	51234	-	2	1	170	173	237	240	-	-	55	-	8,1500
	53234	-	2	3	170	173	237	240	-	-	58,7	-	7,6900
	53234 U	U234	2	3	170	173	237	240	200	250	58,7	65	10,0500
	51334	-	3	1	170	174	275	280	-	-	87	-	22,0000
	53334	-	3	3	170	174	275	280	-	-	91,3	-	22,0000
	53334 U	U334	3	3	170	174	275	280	220	290	91,3	100	24,5000
	51434	-	4	1	170	174	335	340	-	-	135	-	60,0000
180	**51136**	-	1	1	180	183	222	225	-	-	34	-	3,5000
	51236	-	2	1	180	183	245	250	-	-	56	-	8,6000
	53236	-	2	3	180	183	245	250	-	-	58,2	-	8,0800
	53236 U	U236	2	3	180	183	245	250	210	260	58,2	66	9,2500
	51336	-	3	1	180	184	295	300	-	-	95	-	28,1000
	53336	-	3	3	180	184	295	300	-	-	99,3	-	26,9000
	53336 U	U336	3	3	180	184	295	300	240	310	99,3	109	29,9000
	51436	-	4	1	180	184	355	360	-	-	140	-	69,5000
190	**51138**	-	1	1	190	193	237	240	-	-	37	-	4,0500
	51238	-	2	1	190	194	265	270	-	-	62	-	11,7000
	53238	-	2	3	190	194	265	270	-	-	65,7	-	11,2000
	53238 U	U238	2	3	190	194	265	270	230	280	65,7	73	13,0500
	51338	-	3	1	190	195	315	320	-	-	105	-	36,0000
	53338	-	3	3	190	195	315	320	-	-	111	-	36,3000
	53338 U	U338	3	3	190	195	315	320	255	330	111	121	39,7000
200	**51140**	-	1	1	200	203	247	250	-	-	37	-	4,2500
	51240	-	2	1	200	204	275	280	-	-	62	-	12,2000
	53240	-	2	3	200	204	275	280	-	-	65,3	-	11,6000
	53240 U	U240	2	3	200	204	275	280	240	290	65,3	74	14,8000
	51340	-	3	1	200	205	335	340	-	-	110	-	42,9000
	53340	-	3	3	200	205	335	340	-	-	118,4	-	42,7000
	53340 U	U340	3	3	200	205	335	340	270	350	118,4	130	46,7000
220	**51144**	-	1	1	220	223	267	270	-	-	37	-	4,6000
	51244	-	2	1	220	224	295	300	-	-	63	-	13,5000
	53244	-	2	3	220	224	295	300	-	-	65,6	-	12,6000
	53244 U	U244	2	3	220	224	295	300	260	310	65,6	75	15,9000

- warehouse - order - phone

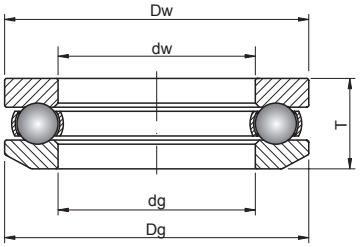

532.. 533.. 534..

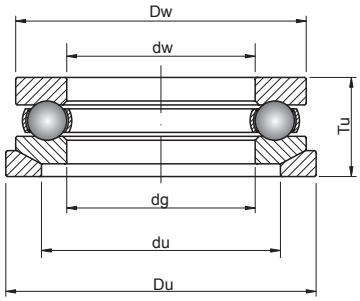

532..U 533..U 534..U

Basic load ratings [kN]		Limiting speed [rpm]		Basic makes*					Bearing No.
dyn. C	stat. C_0	grease	oil	-	M	TN	P6	P5	
111	400	1200	1700						**51130**
238	735	900	1300						**51230**
244	768	840	1300						**53230**
244	768	840	1300						**53230 U**
410	1290	670	900						**51330**
377	1200	580	900						**53330**
377	1200	580	900						**53330 U**
568	1910	420	650						**51430**
112	425	1200	1700						**51132**
242	780	850	1200						**51232**
247	803	810	1250						**53232**
247	803	810	1250						**53232 U**
470	1570	550	850						**51332**
470	1570	550	850						**53332**
470	1570	550	850						**53332 U**
681	2410	390	600						**51432**
133	500	1100	1600						**51134**
286	930	800	1100						**51234**
269	874	750	1150						**53234**
269	874	750	1150						**53234 U**
463	1570	520	800						**51334**
463	1570	520	800						**53334**
463	1570	520	800						**53334 U**
755	2730	360	550						**51434**
135	530	1000	1500						**51136**
296	1000	800	1100						**51236**
294	986	710	1100						**53236**
294	986	710	1100						**53236 U**
463	1580	490	750						**51336**
463	1580	490	750						**53336**
463	1580	490	750						**53336 U**
742	2730	320	500						**51436**
172	655	950	1400						**51138**
298	1010	650	1000						**51238**
298	1010	650	1000						**53238**
298	1010	650	1000						**53238 U**
543	1950	440	680						**51338**
543	1950	440	680						**53338**
543	1950	440	680						**53338 U**
168	655	950	1400						**51140**
314	1110	620	950						**51240**
314	1110	620	950						**53240**
314	1110	620	950						**53240 U**
596	2220	420	650						**51340**
596	2220	420	650						**53340**
596	2220	420	650						**53340 U**
178	735	900	1300						**51144**
342	1310	580	900						**51244**
342	1310	580	900						**53244**
342	1310	580	900						**53244 U**

* Other products also available



https://nppnovoteh.com

8. THRUST BALL BEARINGS

8.1. Single-direction thrust ball bearings





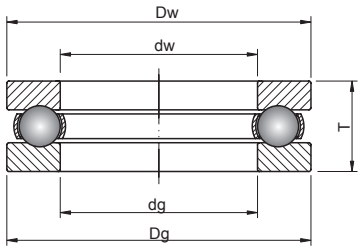

511.. 512.. 513.. 514..

240 – 600 mm

Shaft [mm]	Bearing No.	Spherical washer U...	Series		Dimensions [mm]								Weight [kg]
			SD	ST	dw	dg	Dw	Dg	du	Du	T	Tu	
240	**51148**	-	1	1	240	243	297	300	-	-	45	-	7,5500
	51248	-	2	1	240	244	335	340	-	-	78	-	23,1000
	53248	-	2	3	240	244	335	340	-	-	81,6	-	20,9000
	53248 U	U248	2	3	240	244	335	340	290	350	81,6	92	25,6000
260	**51152**	-	1	1	260	263	317	320	-	-	45	-	8,1000
	51252	-	2	1	260	264	355	360	-	-	79	-	25,0000
	53252	-	2	3	260	264	355	360	-	-	82,8	-	22,6000
	53252 U	U252	2	3	260	264	355	360	305	370	82,8	93	28,5000
280	**51156**	-	1	1	280	283	347	350	-	-	53	-	12,0000
	51256	-	2	1	280	284	375	380	-	-	80	-	23,7000
300	**51160**	-	1	1	300	304	376	380	-	-	62	-	17,5000
	51260	-	2	1	300	304	415	420	-	-	95	-	42,5000
	53260	-	2	3	300	304	415	420	-	-	100,5	-	39,5000
	53260 U	U260	2	3	300	304	415	420	360	430	100,5	112	48,0000
320	**51164**	-	1	1	320	324	396	400	-	-	63	-	19,0000
	51264	-	2	1	320	325	435	440	-	-	95	-	45,0000
	53264	-	2	3	320	325	435	440	-	-	100,5	-	42,0000
	53264 U	U264	2	3	320	325	435	440	380	450	100,5	112	52,0000
340	**51168**	-	1	1	340	344	416	420	-	-	64	-	20,5000
	51268	-	2	1	340	345	455	460	-	-	96	-	48,0000
	53268	-	2	3	340	345	455	460	-	-	100,3	-	45,0000
	53268 U	U268	2	3	340	345	455	460	400	470	100,3	113	55,0000
360	**51172**	-	1	1	360	364	436	440	-	-	65	-	22,0000
	51272	-	2	1	360	365	495	500	-	-	110	-	70,0000
	53272	-	2	3	360	365	495	500	-	-	116,7	-	65,0000
	53272 U	U272	2	3	360	365	495	500	430	510	116,7	130	82,0000
380	**51176**	-	1	1	380	384	456	460	-	-	65	-	23,0000
	51276	-	2	1	380	385	515	520	-	-	112	-	74,0000
400	**51180**	-	1	1	400	404	476	480	-	-	65	-	23,5000
	51280	-	2	1	400	405	535	540	-	-	112	-	78,0000
420	**51184**	-	1	1	420	424	495	500	-	-	65	-	24,4000
	51284	-	2	1	420	425	575	580	-	-	130	-	111,0000
440	**51188**	-	1	1	440	444	535	540	-	-	80	-	41,5000
	51288	-	2	1	440	445	595	600	-	-	130	-	115,0000
460	**51192**	-	1	1	460	464	555	560	-	-	80	-	37,2000
	51292	-	2	1	460	465	615	620	-	-	130	-	120,0000
480	**51196**	-	1	1	480	484	575	580	-	-	80	-	44,0000
500	**511/500**	-	1	1	500	505	595	600	-	-	80	-	44,9000
530	**511/530**	-	1	1	530	535	635	640	-	-	85	-	54,8000
560	**511/560**	-	1	1	560	565	665	670	-	-	85	-	58,0000
600	**511/600**	-	1	1	600	605	705	710	-	-	85	-	64,0000

- warehouse - order - phone

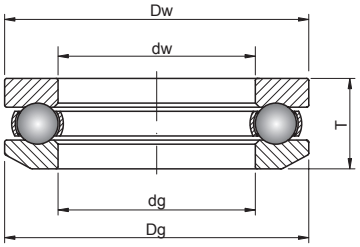

532.. 533.. 534..

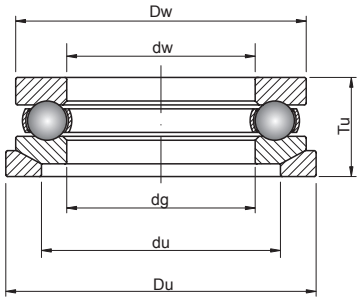

532..U 533..U 534..U

Basic load ratings [kN]		Limiting speed [rpm]		Basic makes*					Bearing No.
dyn. C	stat. C_0	grease	oil	-	M	TN	P6	P5	
234	965	800	1100						**51148**
442	1800	520	800						**51248**
442	1800	520	800						**53248**
442	1800	520	800						**53248 U**
238	1020	800	1100						**51152**
445	1880	490	750						**51252**
445	1880	490	750						**53252**
445	1880	490	750						**53252 U**
319	1340	700	950						**51156**
490	2160	450	700						**51256**
364	1600	630	850						**51160**
570	2600	400	600						**51260**
570	2600	400	600						**53260**
570	2600	400	600						**53260 U**
371	1700	600	800						**51164**
577	2710	400	600						**51264**
577	2710	400	600						**53264**
577	2710	400	600						**53264 U**
380	1800	600	750						**51168**
584	2830	380	570						**51268**
584	2830	380	570						**53268**
584	2830	380	570						**53268 U**
390	1900	560	750						**51172**
701	3500	340	500						**51272**
701	3500	340	500						**53272**
701	3500	340	500						**53272 U**
397	2000	560	750						**51176**
712	3650	320	480						**51276**
440	2320	450	670						**51180**
722	3810	300	460						**51280**
440	2450	420	630						**51184**
818	4420	280	430						**51284**
522	2930	395	590						**51188**
832	4620	270	400						**51288**
530	3100	375	560						**51192**
847	4830	255	380						**51292**
535	3150	370	550						**51196**
550	3350	355	530						**511/500**
620	3900	320	480						**511/530**
630	4150	320	480						**511/560**
638	4250	305	460						**511/600**

* Other products also available

https://nppnovoteh.com

8. THRUST BALL BEARINGS

8.2. Double- direction thrust ball bearings





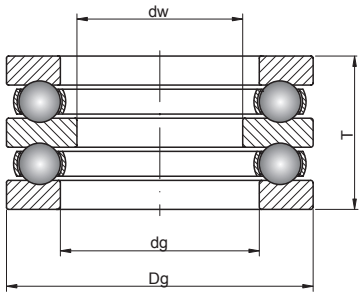

522.. 523.. 524..

10 – 35 mm

Shaft [mm]	Bearing No.	Spherical washer U...	Series		Dimensions [mm]							Weight [kg]
			SD	ST	dw	dg	Dg	du	Du	T	Tu	
10	**52202**	-	2	2	10	17	32	-	-	22	-	0,081
	54202	-	2	4	10	17	32	-	-	24,6	-	0,088
	54202 U	U202	2	4	10	17	32	24	35	24,6	28	0,118
15	**52204**	-	2	2	15	22	40	-	-	26	-	0,15
	54204	-	2	4	15	22	40	-	-	27,4	-	0,146
	54204 U	U204	2	4	15	22	40	30	42	27,4	32	0,19
	52405	-	4	2	15	27	60	-	-	45	-	0,63
	54405	-	4	4	15	27	60	-	-	49,8	-	0,62
	54405 U	U405	4	4	15	27	60	42	62	49,8	55	0,804
20	**52205**	-	2	2	20	27	47	-	-	28	-	0,22
	54205	-	2	4	20	27	47	-	-	31,4	-	0,236
	54205 U	U205	2	4	20	27	47	36	50	31,4	36	0,304
	52305	-	3	2	20	27	52	-	-	34	-	0,33
	54305	-	3	4	20	27	52	-	-	37,6	-	0,348
	54305 U	U305	3	4	20	27	52	38	55	37,6	42	0,428
	52406	-	4	2	20	32	70	-	-	52	-	1
	54406	-	4	4	20	32	70	-	-	56,2	-	0,99
	54406 U	U406	4	4	20	32	70	50	75	56,2	62	1,25
25	**52206**	-	2	2	25	32	52	-	-	29	-	0,25
	54206	-	2	4	25	32	52	-	-	32,6	-	0,27
	54206 U	U206	2	4	25	32	52	42	55	32,6	37	0,346
	52306	-	3	2	25	32	60	-	-	38	-	0,47
	54306	-	3	4	25	32	60	-	-	41,2	-	0,498
	54306 U	U306	3	4	25	32	60	45	62	41,2	46	0,602
	52407	-	4	2	25	37	80	-	-	59	-	1,45
	54407	-	4	4	25	37	80	-	-	63	-	1,45
	54407 U	U407	4	4	25	37	80	58	85	63	69	1,79
30	**52207**	-	2	2	30	37	62	-	-	34	-	0,41
	54207	-	2	4	30	37	62	-	-	37,8	-	0,426
	54207 U	U207	2	4	30	37	62	48	65	37,8	42	0,544
	52208	-	2	2	30	42	68	-	-	36	-	0,55
	54208	-	2	4	30	42	68	-	-	38,6	-	0,548
	54208 U	U208	2	4	30	42	68	55	72	38,6	44	0,68
	52307	-	3	2	30	37	68	-	-	44	-	0,68
	54307	-	3	4	30	37	68	-	-	47,2	-	0,772
	54307 U	U307	3	4	30	37	68	52	72	47,2	52	0,898
	52308	-	3	2	30	42	78	-	-	49	-	1,05
	54308	-	3	4	30	42	78	-	-	54	-	1,134
	54308 U	U308	3	4	30	42	78	60	82	54	59	1,34
	52408	-	4	2	30	42	90	-	-	65	-	2,05
	54408	-	4	4	30	42	90	-	-	69,4	-	2,05
	54408 U	U408	4	4	30	42	90	65	95	69,4	77	2,55
35	**52209**	-	2	2	35	47	73	-	-	37	-	0,6
	54209	-	2	4	35	47	73	-	-	39,6	-	0,628
	54209 U	U209	2	4	35	47	73	60	78	39,6	45	0,784
	52309	-	3	2	35	47	85	-	-	52	-	1,25
	54309	-	3	4	35	47	85	-	-	56,2	-	1,32
	54309 U	U309	3	4	35	47	85	65	90	56,2	62	1,62
	52409	-	4	2	35	47	100	-	-	72	-	2,7
	54409	-	4	4	35	47	100	-	-	78,8	-	2,78
	54409 U	U409	4	4	35	47	100	72	105	78,8	86	3,42

- warehouse - order - phone

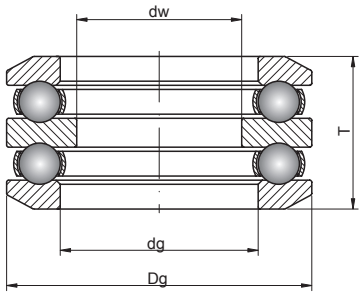

542.. 543.. 544..

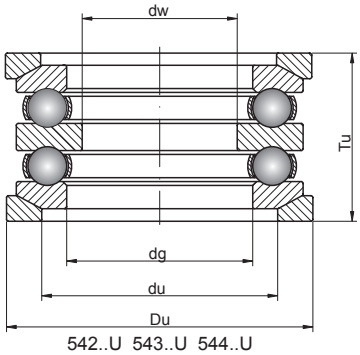

542..U 543..U 544..U

Basic load ratings [kN]		Limiting speed [rpm]		Basic makes*					Bearing No.
dyn. C	stat. C_0	grease	oil	-	M	TN	P6	P5	
16,5	25	5300	7000						**52202**
16,6	24,8	4900	7500						**54202**
16,6	24,8	4900	7500						**54202 U**
22,5	37,5	4500	6000						**52204**
22,3	37,7	3900	6000						**54204**
22,3	37,7	3900	6000						**54204 U**
55,6	89,4	2600	4000						**52405**
55,6	89,4	2600	4000						**54405**
55,6	89,4	2600	4000						**54405 U**
27,6	50	4000	5300						**52205**
27,7	50,4	3600	5500						**54205**
27,7	50,4	3600	5500						**54205 U**
34,5	55	3400	4500						**52305**
35,7	61,4	3100	4800						**54305**
35,7	61,4	3100	4800						**54305 U**
72,8	125	2000	3000						**52406**
72,8	126	2200	3400						**54406**
72,8	126	2200	3400						**54406 U**
25,5	47,5	3600	4800						**52206**
28,1	54,3	3400	5200						**54206**
28,1	54,3	3400	5200						**54206 U**
37,7	65,5	2800	3800						**52306**
42,8	78,7	2700	4200						**54306**
42,8	78,7	2700	4200						**54306 U**
87,1	156	1800	2600						**52407**
87,1	155	1900	2900						**54407**
87,1	155	1900	2900						**54407 U**
35,1	67	3000	4000						**52207**
40,7	83,8	2900	4500						**54207**
40,7	83,8	2900	4500						**54207 U**
46,8	98	2800	3800						**52208**
46,9	98,3	2700	4200						**54208**
46,9	98,3	2700	4200						**54208 U**
49,4	88	2400	3400						**52307**
55,5	105	2400	3700						**54307**
55,5	105	2400	3700						**54307 U**
61,8	112	2000	3000						**52308**
69,3	135	2100	3300						**54308**
69,3	135	2100	3300						**54308 U**
112	204	1700	2400						**52408**
113	205	1700	2600						**54408**
113	205	1700	2600						**54408 U**
39	80	2600	3600						**52209**
47,7	105	2600	4000						**54209**
47,7	105	2600	4000						**54209 U**
76,1	140	1900	2800						**52309**
80	163	1900	3000						**54309**
80	163	1900	3000						**54309 U**
130	240	1600	2200						**52409**
130	242	1500	2300						**54409**
130	242	1500	2300						**54409 U**

* Other products also available

https://nppnovoteh.com

8. THRUST BALL BEARINGS

8.2. Double- direction thrust ball bearings





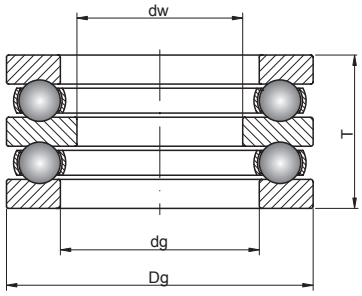

522.. 523.. 524..

40 – 60 mm

Shaft [mm]	Bearing No.	Spherical washer U...	Series		Dimensions [mm]							Weight [kg]
			SD	ST	dw	dg	Dg	du	Du	T	Tu	
40	**52210**	-	2	2	40	52	78	-	-	39	-	0,71
	54210	-	2	4	40	52	78	-	-	42	-	0,722
	54210 U	U210	2	4	40	52	78	62	82	42	47	0,89
	52310	-	3	2	40	52	95	-	-	58	-	1,75
	54310	-	3	4	40	52	95	-	-	64,6	-	1,966
	54310 U	U310	3	4	40	52	95	72	100	64,6	70	2,35
	52410	-	4	2	40	52	110	-	-	78	-	3,56
	54410	-	4	4	40	52	110	-	-	83,2	-	3,57
	54410 U	U410	4	4	40	52	110	80	115	83,2	92	4,39
45	**52211**	-	2	2	45	57	90	-	-	45	-	1,1
	54211	-	2	4	45	57	90	-	-	49,6	-	1,176
	54211 U	U211	2	4	45	57	90	72	95	49,6	55	1,44
	52311	-	3	2	45	57	105	-	-	64	-	2,4
	54311	-	3	4	45	57	105	-	-	72,6	-	2,71
	54311 U	U311	3	4	45	57	105	80	110	72,6	78	3,21
	52411	-	4	2	45	57	120	-	-	87	-	4,7
	54411	-	4	4	45	57	120	-	-	92	-	4,56
	54411 U	U411	4	4	45	57	120	88	125	92	101	5,62
50	**52212**	-	2	2	50	62	95	-	-	46	-	1,2
	54212	-	2	4	50	62	95	-	-	50	-	1,316
	54212 U	U212	2	4	50	62	95	78	100	50	56	1,57
	52312	-	3	2	50	62	110	-	-	64	-	2,55
	54312	-	3	4	50	62	110	-	-	70,6	-	2,87
	54312 U	U312	3	4	50	62	110	85	115	70,6	78	3,37
	52412	-	4	2	50	62	130	-	-	93	-	6,35
	54412	-	4	4	50	62	130	-	-	99	-	6,22
	54412 U	U412	4	4	50	62	130	95	135	99	107	7,6
	52413	-	4	2	50	68	140	-	-	101	-	8,03
	54413	-	4	4	50	68	140	-	-	109,4	-	8,1
	54413 U	U413	4	4	50	68	140	100	145	109,4	119	9,72
55	**54213**	-	2	4	55	67	100	-	-	50,4	-	1,376
	54213 U	U213	2	4	55	67	100	82	105	50,4	57	1,7
	52214	-	2	2	55	72	105	-	-	47	-	1,52
	54214	-	2	4	55	72	105	-	-	50,6	-	1,506
	54214 U	U214	2	4	55	72	105	88	110	50,6	57	1,84
	52313	-	3	2	55	67	115	-	-	65	-	2,75
	54313	-	3	4	55	67	115	-	-	71,8	-	3,14
	54313 U	U313	3	4	55	67	115	90	120	71,8	79	3,66
	52314	-	3	2	55	72	125	-	-	72	-	3,65
	54314	-	3	4	55	72	125	-	-	80,4	-	4,06
	54314 U	U314	3	4	55	72	125	98	130	80,4	88	4,78
	52414	-	4	2	55	73	150	-	-	107	-	11,6
	54414	-	4	4	55	73	150	-	-	114,2	-	9,62
	54414 U	U414	4	4	55	73	150	110	155	114,2	125	11,6
60	**52215**	-	2	2	60	77	110	-	-	47	-	1,55
	54215	-	2	4	60	77	110	-	-	49,6	-	1,624
	54215 U	U215	2	4	60	77	110	92	115	49,6	57	1,96
	52315	-	3	2	60	77	135	-	-	79	-	4,8
	54315	-	3	4	60	77	135	-	-	87,2	-	5,08
	54315 U	U315	3	4	60	77	135	105	140	87,2	95	6,08
	54415	-	4	4	60	78	160	-	-	123	-	11,84
	54415 U	U415	4	4	60	78	160	115	165	123	135	14,3

- warehouse - order - phone

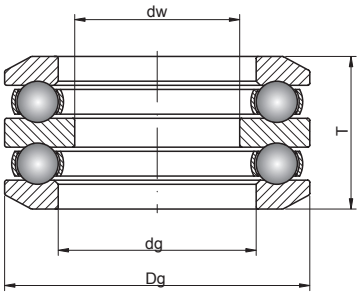

542.. 543.. 544..

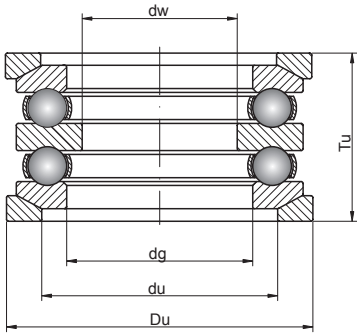

542..U 543..U 544..U

Basic load ratings [kN]		Limiting speed [rpm]		Basic makes*					Bearing No.
dyn. C	stat. C_0	grease	oil	-	M	TN	P6	P5	
49,4	106	2400	3400	●	○	○	○	○	**52210**
48,5	111	2300	3600	○	○	○	○	○	**54210**
48,5	111	2300	3600	○	○	○	○	○	**54210 U**
88,4	173	1800	2600	●	○	○	○	○	**52310**
91,6	186	1800	2700	○	○	○	○	○	**54310**
91,6	186	1800	2700	○	○	○	○	○	**54310 U**
148	283	1400	2100	●	○	○	○	○	**52410**
148	283	1400	2100	○	○	○	○	○	**54410**
148	283	1400	2100	○	○	○	○	○	**54410 U**
61,8	134	1900	2800	●	○	○	○	○	**52211**
69,4	159	2100	3200	○	○	○	○	○	**54211**
69,4	159	2100	3200	○	○	○	○	○	**54211 U**
104	208	1600	2200	●	○	○	○	○	**52311**
119	246	1600	2400	○	○	○	○	○	**54311**
119	246	1600	2400	○	○	○	○	○	**54311 U**
178	360	1300	1800	○	○	○	○	○	**52411**
178	359	1200	1900	○	○	○	○	○	**54411**
178	359	1200	1900	○	○	○	○	○	**54411 U**
62,4	140	1900	2800	●	○	○	○	○	**52212**
73,6	179	1900	3000	○	○	○	○	○	**54212**
73,6	179	1900	3000	○	○	○	○	○	**54212 U**
101	208	1600	2200	●	○	○	○	○	**52312**
124	267	1500	2300	○	○	○	○	○	**54312**
124	267	1500	2300	○	○	○	○	○	**54312 U**
199	400	1100	1600	○	○	○	○	○	**52412**
201	397	1100	1700	○	○	○	○	○	**54412**
201	397	1100	1700	○	○	○	○	○	**54412 U**
232	493	1000	1600	○	○	○	○	○	**52413**
232	493	1000	1600	○	○	○	○	○	**54413**
232	493	1000	1600	○	○	○	○	○	**54413 U**
74,8	189	1900	2900	○	○	○	○	○	**54213**
74,8	189	1900	2900	○	○	○	○	○	**54213 U**
73,6	189	1800	2800	●	○	○	○	○	**52214**
73,6	189	1800	2800	○	○	○	○	○	**54214**
73,6	189	1800	2800	○	○	○	○	○	**54214 U**
106	220	1500	2000	●	○	○	○	○	**52313**
128	287	1400	2200	○	○	○	○	○	**54313**
128	287	1400	2200	○	○	○	○	○	**54313 U**
135	300	1400	1900	●	○	○	○	○	**52314**
148	339	1300	2000	○	○	○	○	○	**54314**
148	339	1300	2000	○	○	○	○	○	**54314 U**
250	553	940	1450	○	○	○	○	○	**52414**
250	553	940	1450	○	○	○	○	○	**54414**
250	553	940	1450	○	○	○	○	○	**54414 U**
67,6	170	1700	2400	●	○	○	○	○	**52215**
77,4	209	1800	2700	○	○	○	○	○	**54215**
77,4	209	1800	2700	○	○	○	○	○	**54215 U**
163	360	1200	1700	●	○	○	○	○	**52315**
171	396	1200	1900	○	○	○	○	○	**54315**
171	396	1200	1900	○	○	○	○	○	**54315 U**
252	560	880	1350	○	○	○	○	○	**54415**
252	560	880	1350	○	○	○	○	○	**54415 U**

* Other products also available

https://nppnovoteh.com

8. THRUST BALL BEARINGS

8.2. Double- direction thrust ball bearings





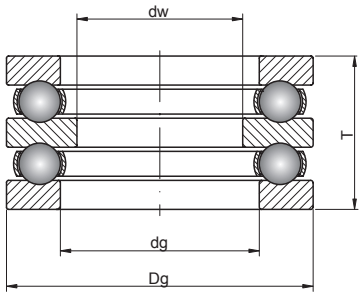

522.. 523.. 524..

65 – 100 mm

Shaft [mm]	Bearing No.	Spherical washer U...	Series		Dimensions [mm]							Weight [kg]
			SD	ST	dw	dg	Dg	du	Du	T	Tu	
65	**52216**	-	2	2	65	82	115	-	-	48	-	1,7
	54216	-	2	4	65	82	115	-	-	51	-	1,714
	54216 U	U216	2	4	65	82	115	98	120	51	58	2,09
	52316	-	3	2	65	82	140	-	-	79	-	4,94
	54316	-	3	4	65	82	140	-	-	86,2	-	5,4
	54316 U	U316	3	4	65	82	140	110	145	86,2	95	6,36
	52416	-	4	2	65	83	170	-	-	120	-	16,6
	54416	-	4	4	65	83	170	-	-	128,4	-	13,84
	54416 U	U416	4	4	65	83	170	125	175	128,4	140	16,6
	54417	-	4	4	65	88	180	-	-	138	-	16,5
	54417 U	U417	4	4	65	88	180	130	185	138	150	19,7
70	**52217**	-	2	2	70	88	125	-	-	55	-	2,4
	54217	-	2	4	70	88	125	-	-	59,2	-	2,44
	54217 U	U217	2	4	70	88	125	105	130	59,2	67	2,9
	52317	-	3	2	70	88	150	-	-	87	-	6,43
	54317	-	3	4	70	88	150	-	-	95,2	-	6,61
	54317 U	U317	3	4	70	88	150	115	155	95,2	105	8,03
	52418	-	4	2	70	93	190	-	-	135	-	19,6
	54418	-	4	4	70	93	190	-	-	143,4	-	19
	54418 U	U418	4	4	70	93	190	140	195	143,4	157	22,8
75	**52218**	-	2	2	75	93	135	-	-	62	-	3,2
	54218	-	2	4	75	93	135	-	-	69	-	3,37
	54218 U	U218	2	4	75	93	135	110	140	69	76	4,07
	52318	-	3	2	75	93	155	-	-	88	-	6,6
	54318	-	3	4	75	93	155	-	-	97,2	-	6,84
	54318 U	U318	3	4	75	93	155	120	160	97,2	106	8,44
80	**52420**	-	4	2	80	103	210	-	-	150	-	26,6
	54420	-	4	4	80	103	210	-	-	160	-	26,2
	54420 U	U420	4	4	80	103	210	155	220	160	176	32
85	**52220**	-	2	2	85	103	150	-	-	67	-	4,2
	54220	-	2	4	85	103	150	-	-	72,8	-	4,49
	54220 U	U220	2	4	85	103	150	125	155	72,8	81	5,25
	52320	-	3	2	85	103	170	-	-	97	-	8,95
	54320	-	3	4	85	103	170	-	-	105,4	-	9,14
	54320 U	U320	3	4	85	103	170	135	175	105,4	115	10,8
90	**52422**	-	4	2	90	113	230	-	-	166	-	34,9
95	**52222**	-	2	2	95	113	160	-	-	67	-	4,65
	54222	-	2	4	95	113	160	-	-	71,4	-	4,8
	54222 U	U222	2	4	95	113	160	135	165	71,4	81	5,66
	52322	-	3	2	95	113	190	-	-	110	-	13,9
	54322	-	3	4	95	113	190	-	-	118,4	-	13,34
	54322 U	U322	3	4	95	113	190	150	195	118,4	128	16,3
	52424	-	4	2	95	123	250	-	-	177	-	44,2
100	**52224**	-	2	2	100	123	170	-	-	68	-	5,25
	54224	-	2	4	100	123	170	-	-	71,6	-	5,62
	54224 U	U224	2	4	100	123	170	145	175	71,6	82	6,44
	52324	-	3	2	100	123	210	-	-	123	-	19,5
	54324	-	3	4	100	123	210	-	-	131,2	-	18,3
	54324 U	U324	3	4	100	123	210	165	220	131,2	143	22,9

- warehouse - order - phone

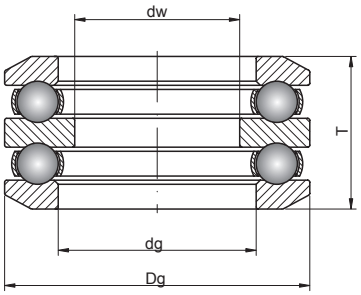

542.. 543.. 544..

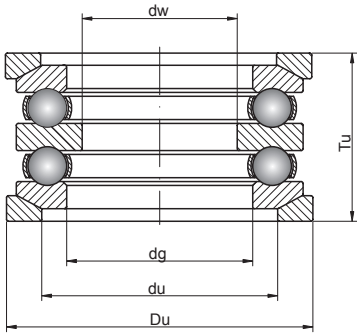

542..U 543..U 544..U

Basic load ratings [kN]		Limiting speed [rpm]		Basic makes*					Bearing No.
dyn. C	stat. C_0	grease	oil	-	M	TN	P6	P5	
76,1	190	1700	2400	●	◴	●	●	●	**52216**
78,5	218	1700	2600	●	●	●	●	●	**54216**
78,5	218	1700	2600	●	●	●	●	●	**54216 U**
159	360	1200	1700	●	◴	●	●	●	**52316**
176	424	1200	1800	●	●	●	●	●	**54316**
176	424	1200	1800	●	●	●	●	●	**54316 U**
270	621	810	1250	●	●	●	●	●	**52416**
270	621	810	1250	●	●	●	●	●	**54416**
270	621	810	1250	●	●	●	●	●	**54416 U**
307	753	780	1200	●	●	●	●	●	**54417**
307	753	780	1200	●	●	●	●	●	**54417 U**
97,5	250	1600	2200	●	◴	●	●	●	**52217**
92,3	251	1500	2300	●	●	●	●	●	**54217**
92,3	251	1500	2300	●	●	●	●	●	**54217 U**
206	489	1100	1700	◴	◴	●	●	●	**52317**
206	489	1100	1700	●	●	●	●	●	**54317**
206	489	1100	1700	●	●	●	●	●	**54317 U**
327	826	710	1100	●	●	●	●	●	**52418**
327	826	710	1100	●	●	●	●	●	**54418**
327	826	710	1100	●	●	●	●	●	**54418 U**
119	300	1500	2000	●	◴	●	●	●	**52218**
117	326	1400	2100	●	●	●	●	●	**54218**
117	326	1400	2100	●	●	●	●	●	**54218 U**
213	524	1000	1600	◴	◴	●	●	●	**52318**
213	524	1000	1600	●	●	●	●	●	**54318**
213	524	1000	1600	●	●	●	●	●	**54318 U**
368	983	620	950	●	●	●	●	●	**52420**
368	983	620	950	●	●	●	●	●	**54420**
368	983	620	950	●	●	●	●	●	**54420 U**
124	320	1300	1800	●	◴	●	●	●	**52220**
147	410	1200	1900	●	●	●	●	●	**54220**
147	410	1200	1900	●	●	●	●	●	**54220 U**
229	560	950	1400	◴	◴	●	●	●	**52320**
236	596	940	1450	●	●	●	●	●	**54320**
236	596	940	1450	●	●	●	●	●	**54320 U**
379	1070	550	850	●	●	●	●	●	**52422**
130	360	1200	1700	●	◴	●	●	●	**52222**
148	431	1200	1800	●	●	●	●	●	**54222**
148	431	1200	1800	●	●	●	●	●	**54222 U**
280	754	810	1250	◴	◴	●	●	●	**52322**
280	754	810	1250	●	●	●	●	●	**54322**
280	754	810	1250	●	●	●	●	●	**54322 U**
480	1460	520	800	●	●	●	●	●	**52424**
140	400	1100	1600	●	◴	●	●	●	**52224**
154	472	1100	1700	●	●	●	●	●	**54224**
154	472	1100	1700	●	●	●	●	●	**54224 U**
325	915	800	1100	◴	◴	●	●	●	**52324**
325	931	710	1100	●	●	●	●	●	**54324**
325	931	710	1100	●	●	●	●	●	**54324 U**

* Other products also available

https://nppnovoteh.com

8. THRUST BALL BEARINGS

8.2. Double- direction thrust ball bearings





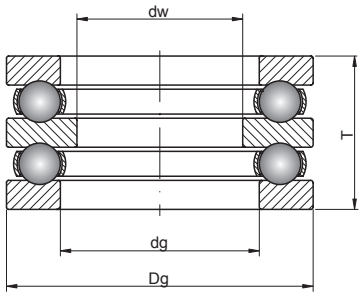

522.. 523.. 524..

100 – 190 mm

Shaft [mm]	Bearing No.	Spherical washer U...	Series		Dimensions [mm]							Weight [kg]
			SD	ST	dw	dg	Dg	du	Du	T	Tu	
100 cont.	**52426**	-	4	2	100	134	270	-	-	192	-	56,5
110	**52226**	-	2	2	110	133	190	-	-	80	-	8
	54226	-	2	4	110	133	190	-	-	85,8	-	7,59
	54226 U	U226	2	4	110	133	190	160	195	85,8	96	9,29
	52326	-	3	2	110	134	225	-	-	130	-	22
	52428	-	4	2	110	144	280	-	-	196	-	60,6
120	**52228**	-	2	2	120	143	200	-	-	81	-	8,65
	54228	-	2	4	120	143	200	-	-	86,2	-	8,22
	54228 U	U228	2	4	120	143	200	170	210	86,2	99	10,5
	52328	-	3	2	120	144	240	-	-	140	-	28,2
	52430	-	4	2	120	154	300	-	-	209	-	73,9
130	**52230**	-	2	2	130	153	215	-	-	89	-	11,5
	54230	-	2	4	130	153	215	-	-	95,6	-	10,22
	54230 U	U230	2	4	130	153	215	180	225	95,6	109	13,6
	52330	-	3	2	130	154	250	-	-	140	-	29,6
	52432	-	4	2	130	164	320	-	-	226	-	90,3
135	**52434**	-	4	2	135	174	340	-	-	236	-	108
140	**52232**	-	2	2	140	163	225	-	-	90	-	12
	54232	-	2	4	140	163	225	-	-	97,4	-	10,28
	54232 U	U232	2	4	140	163	225	190	235	97,4	110	14,6
	52332	-	3	2	140	164	270	-	-	153	-	37,7
	52436	-	4	2	140	184	360	-	-	245	-	126
150	**52234**	-	2	2	150	173	240	-	-	97	-	15
	54234	-	2	4	150	173	240	-	-	104,4	-	13,08
	54234 U	U234	2	4	150	173	240	200	250	104,4	117	17,8
	52236	-	2	2	150	183	250	-	-	98	-	16
	54236	-	2	4	150	183	250	-	-	102,4	-	17,26
	54236 U	U236	2	4	150	183	250	210	260	102,4	118	19,6
	52334	-	3	2	150	174	280	-	-	153	-	39,6
	52336	-	3	2	150	184	300	-	-	165	-	50,9
160	**52238**	-	2	2	160	194	270	-	-	109	-	21,6
	54238	-	2	4	160	194	270	-	-	116,4	-	21,5
	54238 U	U238	2	4	160	194	270	220	280	116,4	131	25,2
	52338	-	3	2	160	195	320	-	-	183	-	64,9
170	**52240**	-	2	2	170	204	280	-	-	109	-	22,7
	54240	-	2	4	170	204	280	-	-	115,6	-	20,9
	54240 U	U240	2	4	170	204	280	240	290	115,6	133	27,3
	52340	-	3	2	170	205	340	-	-	192	-	77,8
190	**52244**	-	2	2	190	224	300	-	-	110	-	23,9
	54244	-	2	4	190	224	300	-	-	115,2	-	22,9
	54244 U	U244	2	4	190	224	300	260	310	115,2	134	29,5

- warehouse - order - phone

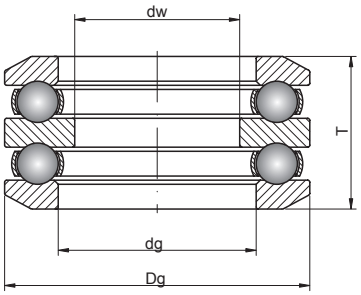

542.. 543.. 544..

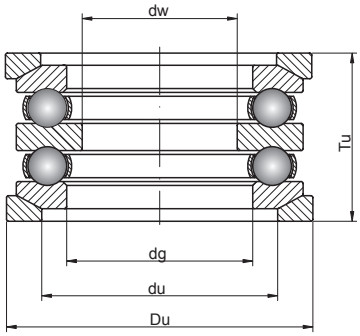

542..U 543..U 544..U

Basic load ratings [kN]		Limiting speed [rpm]		Basic makes*					Bearing No.
dyn. C	stat. C_0	grease	oil	-	M	TN	P6	P5	
498	1540	490	750						**52426**
186	540	950	1400						**52226**
203	622	970	1500						**54226**
203	622	970	1500						**54226 U**
346	1030	650	1000						**52326**
520	1680	450	700						**52428**
190	570	950	1400						**52228**
215	669	940	1450						**54228**
215	669	940	1450						**54228 U**
367	1130	620	950						**52328**
568	1910	420	650						**52430**
238	735	900	1300						**52230**
244	768	840	1300						**54230**
244	768	840	1300						**54230 U**
410	1290	670	900						**52330**
681	2410	390	600						**52432**
755	2730	360	550						**52434**
242	780	850	1200						**52232**
247	803	810	1250						**54232**
247	803	810	1250						**54232 U**
470	1570	550	850						**52332**
742	2730	320	500						**52436**
286	930	800	1100						**52234**
269	874	750	1150						**54234**
269	874	750	1150						**54234 U**
296	1000	800	1100						**52236**
294	986	710	1100						**54236**
294	986	710	1100						**54236 U**
463	1570	520	800						**52334**
463	1580	490	750						**52336**
298	1010	650	1000						**52238**
298	1010	650	1000						**54238**
298	1010	650	1000						**54238 U**
543	1950	440	680						**52338**
314	1110	620	950						**52240**
314	1110	620	950						**54240**
314	1110	620	950						**54240 U**
596	2220	420	650						**52340**
342	1310	580	900						**52244**
342	1310	580	900						**54244**
342	1310	580	900						**54244 U**

* Other products also available

https://nppnovoteh.com

8. THRUST BALL BEARINGS

8.3. Spherical washers for thrust ball bearings



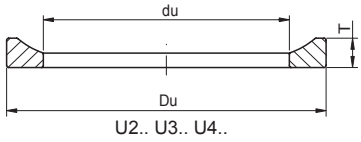

U2.. U3.. U4..

Washer No.	Dimensions [mm]			Weight [kg]	Basic makes*
	du	Du	T		-
U200	18	28	3,5	0,0110	◴
U201	20	30	3,5	0,0140	◴
U202	24	35	4	0,0150	◴
U203	26	38	4	0,0160	◴
U204	30	42	5	0,0220	◴
U205	36	50	5,5	0,0340	◴
U305	38	55	6	0,0400	◴
U405	42	62	8	0,0920	◴
U206	42	55	5,5	0,0380	◴
U306	45	62	7	0,0520	◴
U406	50	75	9	0,1300	◴
U207	48	65	7	0,0590	◴
U307	52	72	7,5	0,0630	◴
U407	58	85	10	0,1700	◴
U208	55	72	7	0,0660	◴
U308	60	82	7,5	0,1030	◴
U408	65	95	12	0,2500	◴
U209	60	78	7,5	0,0780	◴
U309	65	90	10	0,1500	◴
U409	72	105	12,5	0,3200	◴
U210	62	82	7,5	0,0840	◴
U310	72	100	11	0,1920	◴
U410	80	115	14	0,4100	◴
U211	72	95	9	0,1320	◴
U311	80	110	11,5	0,2500	◴
U411	88	125	15,5	0,5300	◴
U212	78	100	9	0,1270	◴
U312	85	115	11,5	0,2500	◴
U412	95	135	16	0,6900	◴
U213	82	105	9	0,1620	◴
U313	90	120	12,5	0,2600	◴
U413	100	145	17,5	0,8100	◴
U214	88	110	9	0,1670	◴
U314	98	130	13	0,3600	◴
U414	110	155	19,5	0,9900	◴
U215	92	115	9,5	0,1680	◴
U315	105	140	15	0,5000	◴
U415	115	165	21	1,2300	◴
U216	98	120	10	0,1880	◴
U316	110	145	15	0,4800	◴
U416	125	175	22	1,3800	◴
U217	105	130	11	0,2300	◴
U317	115	155	17,5	0,7100	◴
U417	130	185	23	1,6000	◴
U218	110	140	13,5	0,3500	◴
U318	120	160	18	0,8000	◴
U418	140	195	25,5	1,9000	◴
U220	125	155	14	0,3800	◴
U320	135	175	18	0,8300	◴
U420	155	220	27	2,9000	◴
U222	135	165	14	0,4300	◴
U322	150	195	20,5	1,4800	◴
U224	145	175	15	0,4100	◴
U324	165	220	22	2,3000	◴
U226	160	195	17	0,8500	◴
U326	177	235	26	2,5000	◴

- warehouse ◴ - order - phone

Washer No.	Dimensions [mm]			Weight [kg]	Basic makes*
	du	Du	T		-
U228	170	210	17	1,1400	◴
U328	190	250	26	2,9000	◴
U230	180	225	20,5	1,6900	◴
U330	200	260	26	3,8000	◴
U232	190	235	21	2,1600	◴
U332	215	280	29	2,4000	◴
U234	200	250	21,5	2,3600	◴
U334	220	290	29	2,5000	◴
U236	210	260	21,5	1,1700	◴
U336	240	310	32	3,0000	◴
U238	230	280	23	1,8500	◴
U338	255	330	33	3,4000	◴
U240	240	290	23	3,2000	◴
U340	270	350	38	4,0000	◴
U244	260	310	25	3,3000	◴
U248	290	350	30	4,7000	◴
U252	305	370	30	5,9000	◴
U260	360	430	34	8,5000	◴
U264	380	450	36	10,0000	◴
U268	400	470	36	10,0000	◴
U272	430	510	43	17,0000	◴



* Other products also available

https://nppnovoteh.com

9. DOUBLE-DIRECTION ANGULAR-CONTACT THRUST BALL BEARINGS

ROLLING BEARINGS

ŁOZYSKA TOCZNE



https://nppnovoteh.com

TABLES:

9. ANGULAR-CONTACT DOUBLE-DIRECTION THRUST BALL BEARINGS
9.1. Angular contact thrust ball bearings

INTRODUCTION:

9. Angular contact thrust ball bearings

9.1. Dimension series

- **2344.. 2347..**

9.2. Dimensional accuracy

Angular-contact double-direction thrust ball bearings are conventionally made in the SP (Super Precision) accuracy class or in the higher UP (Ultra Precision) accuracy class when made to order.

9.3. Structure

Angular-contact double-direction thrust ball bearings are separable and their parts are irreplaceable (fitted). Because they are angular bearings, their contact angle equals 60°. That is why angular-contact double-direction thrust ball bearings achieve high load carrying capacity in the axial direction and high rigidity.

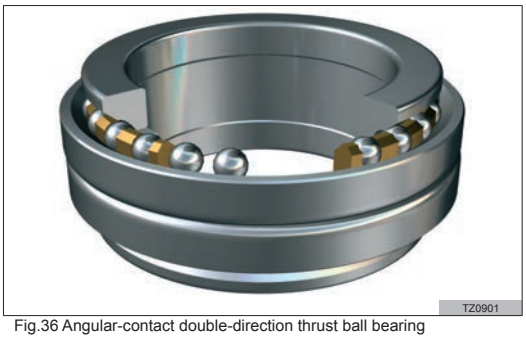

Fig.36 Angular-contact double-direction thrust ball bearing

9.4. Initial stress

Initial stress in angular-contact double-direction thrust ball bearings is ensured through implementing of an appropriate distance sleeve, placed between inner rings of the bearing.

9.5. Cages

Angular-contact double-direction thrust ball bearings are equipped with solid brass cages. Such solution affects considerably the ability of the bearing to support high rotational speed, whereas each row of balls has its own cage guided on balls.

9.6. Application

Angular-contact double-direction thrust ball bearings are most often used in machine tools' spindles, where they are mounted together with cylindrical roller bearings of NN30.. K-series, whilst they can be mounted both from the smaller and from the larger diameter of the tapered bearing mounting. Important feature with regard to the housing of the bearing is the fact, that this type of bearings has the same rated outside diameters as already mentioned cylindrical roller bearings.

https://nppnovoteh.com

9. ANGULAR-CONTACT DOUBLE-DIRECTION THRUST BALL BEARINGS

9.1. Angular contact thrust ball bearings



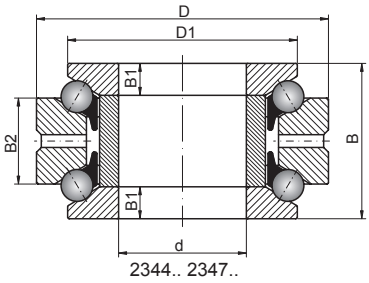

2344.. 2347..

30 – 248 mm

Shaft [mm]	Bearing No.	Dimensions [mm]						Weight [kg]
		d	D	B	D1	B1	B2	
30	**234406 MSP**	30	55	32	47,0	8,0	16	0,29
32	**234706 MSP**	32	55	32	47,0	8,0	16	0,27
35	**234407 MSP**	35	62	34	53,0	8,5	17	0,38
37	**234707 MSP**	37	62	34	53,0	8,5	17	0,35
40	**234408 MSP**	40	68	36	58,5	9,0	18	0,46
42	**234708 MSP**	42	68	36	58,5	9,0	18	0,43
45	**234409 MSP**	45	75	38	65,0	9,5	19	0,58
47	**234709 MSP**	47	75	38	65,0	9,5	19	0,54
50	**234410 MSP**	50	80	38	70,0	9,5	19	0,63
52	**234710 MSP**	52	80	38	70,0	9,5	19	0,58
55	**234411 MSP**	55	90	44	78,0	11,0	22	0,94
57	**234711 MSP**	57	90	44	78,0	11,0	22	0,88
60	**234412 MSP**	60	95	44	83,0	11,0	22	1,01
62	**234712 MSP**	62	95	44	83,0	11,0	22	0,94
65	**234413 MSP**	65	100	44	88,0	11,0	22	1,08
67	**234713 MSP**	67	100	44	88,0	11,0	22	1,01
70	**234414 MSP**	70	110	48	97,0	12,0	24	1,49
73	**234714 MSP**	73	110	48	97,0	12,0	24	1,36
75	**234415 MSP**	75	115	48	102,0	12,0	24	1,57
78	**234715 MSP**	78	115	48	102,0	12,0	24	1,43
80	**234416 MSP**	80	125	54	110,0	13,5	27	2,16
83	**234716 MSP**	83	125	54	110,0	13,5	27	1,98
85	**234417 MSP**	85	130	54	115,0	13,5	27	2,25
88	**234717 MSP**	88	130	54	115,0	13,5	27	2,07
90	**234418 MSP**	90	140	60	123,0	15,0	30	2,92
93	**234718 MSP**	93	140	60	123,0	15,0	30	2,71
95	**234419 MSP**	95	145	60	128,0	15,0	30	3,04
98	**234719 MSP**	98	145	60	128,0	15,0	30	2,83
100	**234420 MSP**	100	150	60	133,0	15,0	30	3,17
103	**234720 MSP**	103	150	60	133,0	15,0	30	2,95
105	**234421 MSP**	105	160	66	142,0	16,5	33	4,07
109	**234721 MSP**	109	160	66	142,0	16,5	33	3,73
110	**234422 MSP**	110	170	72	150,0	18,0	36	5,19
114	**234722 MSP**	114	170	72	150,0	18,0	36	4,79
120	**234424 MSP**	120	180	72	160,0	18,0	36	5,56
124	**234724 MSP**	124	180	72	160,0	18,0	36	5,14
130	**234426 MSP**	130	200	84	177,0	21,0	42	8,28
135	**234726 MSP**	135	200	84	177,0	21,0	42	7,58
140	**234428 MSP**	140	210	84	187,0	21,0	42	8,78
145	**234728 MSP**	145	210	84	187,0	21,0	42	8,07
150	**234430 MSP**	150	225	90	200,0	22,5	45	10,80
155	**234730 MSP**	155	225	90	200,0	22,5	45	9,95
160	**234432 MSP**	160	240	96	212,0	24,0	48	12,90
165	**234732 MSP**	165	240	96	212,0	24,0	48	12,00
170	**234434 MSP**	170	260	108	230,0	27,0	54	17,70
176	**234734 MSP**	176	260	108	230,0	27,0	54	16,30
180	**234436 MSP**	180	280	120	248,0	30,0	60	23,40
187	**234736 MSP**	187	280	120	248,0	30,0	60	21,50
190	**234438 MSP**	190	290	120	258,0	30,0	60	24,70
197	**234738 MSP**	197	290	120	258,0	30,0	60	22,60
200	**234440 MSP**	200	310	132	274,0	33,0	66	31,50
207	**234740 MSP**	207	310	132	274,0	33,0	66	29,20
220	**234444 MSP**	220	340	144	304,0	36,0	72	41,70
228	**234744 MSP**	228	340	144	304,0	36,0	72	38,50
240	**234448 MSP**	240	360	144	322,0	36,0	72	43,80
248	**234748 MSP**	248	360	144	322,0	36,0	72	40,40

- warehouse - order - phone

https://nppnovoteh.com

Basic load ratings [kN]		Limiting speed [rpm]		Basic makes*		Bearing No.
dyn. C	stat. C_0	grease	oil	-	MUP	
14,30	24,00	11000	16000			**234406 MSP**
14,30	24,00	11000	16000			**234706 MSP**
17,60	31,50	9500	14000			**234407 MSP**
17,60	31,50	9500	14000			**234707 MSP**
20,80	38,00	8500	12000			**234408 MSP**
20,80	38,00	8500	12000			**234708 MSP**
23,20	45,00	7500	10000			**234409 MSP**
23,20	45,00	7500	10000			**234709 MSP**
24,00	49,00	7000	9500			**234410 MSP**
24,00	49,00	7000	9500			**234710 MSP**
34,00	67,00	6300	8500			**234411 MSP**
34,00	67,00	6300	8500			**234711 MSP**
33,50	68,00	6000	8000			**234412 MSP**
33,50	68,00	6000	8000			**234712 MSP**
36,00	76,50	5600	7500			**234413 MSP**
36,00	76,50	5600	7500			**234713 MSP**
42,50	93,00	5300	7000			**234414 MSP**
42,50	93,00	5300	7000			**234714 MSP**
44,00	100,00	5000	6700			**234415 MSP**
44,00	100,00	5000	6700			**234715 MSP**
52,00	120,00	4500	6000			**234416 MSP**
52,00	120,00	4500	6000			**234716 MSP**
52,00	125,00	4500	6000			**234417 MSP**
52,00	125,00	4500	6000			**234717 MSP**
61,00	146,00	4000	5300			**234418 MSP**
61,00	146,00	4000	5300			**234718 MSP**
61,00	150,00	4000	5300			**234419 MSP**
61,00	150,00	4000	5300			**234719 MSP**
62,00	156,00	3800	5000			**234420 MSP**
62,00	156,00	3800	5000			**234720 MSP**
69,50	176,00	3600	4800			**234421 MSP**
69,50	176,00	3600	4800			**234721 MSP**
90,00	224,00	3400	4500			**234422 MSP**
90,00	224,00	3400	4500			**234722 MSP**
93,00	240,00	3200	4300			**234424 MSP**
93,00	240,00	3200	4300			**234724 MSP**
118,00	300,00	2800	3800			**234426 MSP**
118,00	300,00	2800	3800			**234726 MSP**
122,00	320,00	2600	3600			**234428 MSP**
122,00	320,00	2600	3600			**234728 MSP**
132,00	355,00	2600	3600			**234430 MSP**
132,00	355,00	2600	3600			**234730 MSP**
156,00	415,00	2400	3400			**234432 MSP**
156,00	415,00	2400	3400			**234732 MSP**
193,00	520,00	2200	3200			**234434 MSP**
193,00	520,00	2200	3200			**234734 MSP**
216,00	585,00	2000	3000			**234436 MSP**
216,00	585,00	2000	3000			**234736 MSP**
224,00	630,00	1900	2800			**234438 MSP**
224,00	630,00	1900	2800			**234738 MSP**
265,00	720,00	1800	2600			**234440 MSP**
265,00	720,00	1800	2600			**234740 MSP**
315,00	900,00	1600	2200			**234444 MSP**
315,00	900,00	1600	2200			**234744 MSP**
325,00	965,00	1500	2000			**234448 MSP**
325,00	965,00	1500	2000			**234748 MSP**

* Other products also available



https://nppnovoteh.com

9. ANGULAR-CONTACT DOUBLE-DIRECTION THRUST BALL BEARINGS

9.1. Angular contact thrust ball bearings



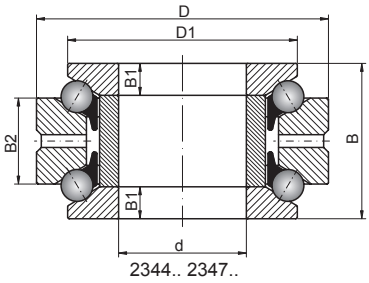

2344.. 2347..

260 – 410 mm

Shaft [mm]	Bearing No.	Dimensions [mm]						Weight [kg]
		d	D	B	D1	B1	B2	
260	**234452 MSP**	260	400	164	354,0	41,0	82	64,50
269	**234752 MSP**	269	400	164	354,0	41,0	82	59,70
280	**234456 MSP**	280	420	164	374,0	41,0	82	69,00
289	**234756 MSP**	289	420	164	374,0	41,0	82	63,80
300	**234460 MSP**	300	460	190	406,0	47,5	95	98,40
310	**234760 MSP**	310	460	190	406,0	47,5	95	91,20
320	**234464 MSP**	320	480	190	426,0	47,5	95	102,00
330	**234764 MSP**	330	480	190	426,0	47,5	95	94,90
340	**234468 MSP**	340	520	212	459,0	53,0	106	138,00
350	**234768 MSP**	350	520	212	459,0	53,0	106	129,00
360	**234472 MSP**	360	540	212	479,0	53,0	106	144,00
370	**234772 MSP**	370	540	212	479,0	53,0	106	135,00
380	**234476 MSP**	380	560	212	499,0	53,0	106	154,00
390	**234776 MSP**	390	560	212	499,0	53,0	106	144,00
400	**234480 MSP**	400	600	236	532,0	59,0	118	198,00
410	**234780 MSP**	410	600	236	532,0	59,0	118	187,00

- warehouse - order - phone

https://nppnovoteh.com

Basic load ratings [kN]		Limiting speed [rpm]		Basic makes*		Bearing No.
dyn. C	stat. C_0	grease	oil	-	MUP	
380,00	1 180,00	1400	1900			**234452 MSP**
380,00	1 180,00	1400	1900			**234752 MSP**
390,00	1 270,00	1300	1800			**234456 MSP**
390,00	1 270,00	1300	1800			**234756 MSP**
450,00	1 530,00	1200	1700			**234460 MSP**
450,00	1 530,00	1200	1700			**234760 MSP**
455,00	1 630,00	1200	1700			**234464 MSP**
455,00	1 630,00	1200	1700			**234764 MSP**
540,00	2 000,00	1100	1600			**234468 MSP**
540,00	2 000,00	1100	1600			**234768 MSP**
540,00	2 040,00	1000	1500			**234472 MSP**
540,00	2 040,00	1000	1500			**234772 MSP**
560,00	2 200,00	1000	1500			**234476 MSP**
560,00	2 200,00	1000	1500			**234776 MSP**
630,00	2 550,00	900	1300			**234480 MSP**
630,00	2 550,00	900	1300			**234780 MSP**

* Other products also available



https://nppnovoteh.com

10. CYLINDRICAL ROLLER THRUST BEARINGS



https://nppnovoteh.com

TABLES:

10. CYLINDRICAL ROLLER THRUST BEARINGS

10.1. Cylindrical roller thrust bearings

INTRODUCTION:

10. Single-row and double-row (single-direction) cylindrical roller thrust bearings

10.1. Dimension series

- **811.. 812..** - single-row, single-direction
- **893.. 894..** - double-row, single-direction

10.2. Structure and features

The structure of these bearings is similar to the structure of thrust ball bearings. They are detachable, consist of three separate parts, a cage with rolling elements and two rings – washers, inner and outer.

Both single-row and double-row cylindrical roller thrust bearings are single-direction bearings.

The features of these bearings are similar to that of thrust ball bearings.

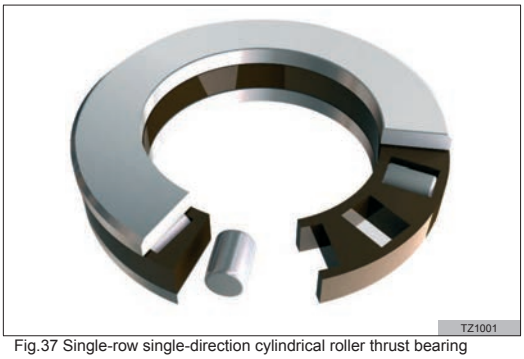

Fig.37 Single-row single-direction cylindrical roller thrust bearing

Load capacity parameters are higher and rotational parameters slightly lower. Application results directly from these differences.

10.3. Division into individual parts, designation and symbolic representation

- **K811.. K812..** - single-row cylindrical roller thrust assembly – small cage with rollers
- **K893..K894..** – double-row cylindrical roller thrust assembly – small cage with rollers
- **WS811..WS812..** – inner ring (811), washer (812)
- **WS893..WS894..** – inner ring (893), washer (894)
- **GS811..GS812..** – outer ring (811), washer (812)
- **GS893.. GS894..** – outer ring (893, 874), washer (894)

10.4. Cages

The cages of cylindrical roller thrust bearings are made of polyamide or steel, exceptionally of brass.

https://nppnovoteh.com

10. CYLINDRICAL ROLLER THRUST BEARINGS

10.1. Cylindrical roller thrust bearings



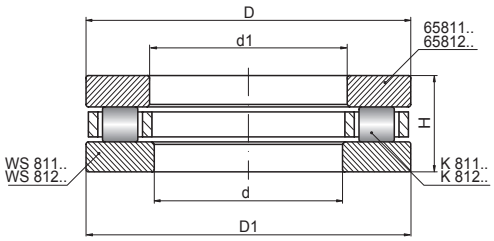

811.. 812..

15 – 80 mm

Shaft [mm]	Bearing No.	cylindrical roller and cage assembly	Ring		Dimensions [mm]					Weight [kg]		
			outer	inner	d	d1	D	D1	H	bearing	cage assembly	any given ring
15	**81102**	K 81102	GS 81102	WS 81102	15	16	28	28	2,75	0,024	0,006	0,008
17	**81103**	K 81103	GS 81103	WS 81103	17	18	30	30	9	0,027	0,009	0,009
20	**81104**	K 81104	GS 81104	WS 81104	20	21	35	35	10	0,037	0,013	0,012
25	**81105**	K 81105	GS 81105	WS 81105	25	26	42	42	11	0,053	0,015	0,019
30	**81106**	K 81106	GS 81106	WS 81106	30	32	47	47	11	0,057	0,017	0,020
	81206	K 81206	GS 81206	WS 81206	30	32	52	52	16	0,120	0,033	0,045
	89306	K 89306	GS 89306	WS 89306	30	32	60	60	6	0,240	0,040	0,095
35	**81107**	K 81107	GS 81107	WS 81107	35	37	52	52	12	0,073	0,019	0,027
	81207	K 81207	GS 81207	WS 81207	35	37	62	62	18	0,200	0,043	0,076
	89307	K 89307	GS 89307	WS 89307	35	37	68	68	7	0,340	0,053	0,134
40	**81108**	K 81108	GS 81108	WS 81108	40	42	60	60	13	0,105	0,031	0,037
	81208	K 81208	GS 81208	WS 81208	40	42	68	68	19	0,250	0,081	0,084
	89308	K 89308	GS 89308	WS 89308	40	42	78	78	7,5	0,484	0,098	0,193
45	**81109**	K 81109	GS 81109	WS 81109	45	47	65	65	14	0,130	0,035	0,047
	81209	K 81209	GS 81209	WS 81209	45	47	73	73	20	0,300	0,085	0,101
	89309	K 89309	GS 89309	WS 89309	45	47	85	85	8,25	0,615	0,121	0,247
50	**81110**	K 81110	GS 81110	WS 81110	50	52	70	70	14	0,140	0,038	0,051
	81210	K 81210	GS 81210	WS 81210	50	52	78	78	22	0,360	0,098	0,129
	89310	K 89310	GS 89310	WS 89310	50	52	95	95	9,5	0,887	0,175	0,356
55	**81111**	K 81111	GS 81111	WS 81111	55	57	78	78	16	0,220	0,045	0,082
	81211	K 81211	GS 81211	WS 81211	55	57	90	90	25	0,570	0,166	0,201
	89311	K 89311	GS 89311	WS 89311	55	57	105	105	10,5	1,180	0,195	0,485
60	**81112**	K 81112	GS 81112	WS 81112	60	62	85	85	17	0,270	0,082	0,092
	81212	K 81212	GS 81212	WS 81212	60	62	95	95	26	0,640	0,176	0,233
	89312	K 89312	GS 89312	WS 89312	60	62	110	110	10,5	1,260	0,210	0,517
	89412	K 89412	GS 89412	WS 89412	60	62	130	130	14,0	2,818	0,538	1,115
65	**81113**	K 81113	GS 81113	WS 81113	65	67	90	90	18	0,310	0,090	0,110
	81213	K 81213	GS 81213	WS 81213	65	67	100	100	27	0,720	0,185	0,268
	89313	K 89313	GS 89313	WS 89313	65	67	115	115	10,5	1,330	0,210	0,535
	89413	K 89413	GS 89413	WS 89413	65	68	140	140	15	3,520	0,720	1,400
70	**81114**	K 81114	GS 81114	WS 81114	70	72	95	95	18	0,330	0,092	0,120
	81214	K 81214	GS 81214	WS 81214	70	72	105	105	27	0,770	0,212	0,278
	89314	K 89314	GS 89314	WS 89314	70	72	125	125	12	1,820	0,290	0,800
	89414	K 89414	GS 89414	WS 89414	70	73	150	150	16,0	4,180	0,760	1,730
75	**81115**	K 81115	GS 81115	WS 81115	75	77	100	100	19	0,380	0,096	0,136
	81215	K 81215	GS 81215	WS 81215	75	77	110	110	27	0,810	0,195	0,293
	89315	K 89315	GS 89315	WS 89315	75	77	135	135	12,5	2,230	0,375	0,970
	89415	K 89415	GS 89415	WS 89415	75	78	160	160	17,0	5,960	1,780	2,090
80	**81116**	K 81116	GS 81116	WS 81116	80	82	105	105	19	0,400	0,095	0,144
	81216	K 81216	GS 81216	WS 81216	80	82	115	115	28	0,900	0,234	0,333
	89316	K 89316	GS 89316	WS 89316	80	82	140	140	12,5	2,370	0,420	1,020
	89416	K 89416	GS 89416	WS 89416	80	83	170	170	18	7,040	2,040	2,500

- warehouse - order - phone

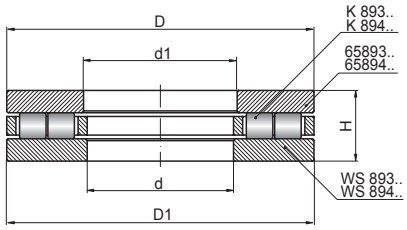

893.. 894..

Basic load ratings [kN]		Limiting speed [rpm]		Basic makes*				Bearing No.
dyn.C	stat.C_0	grease	oil		M	TN	P5	
14,4	28,5	3600	4800					**81102**
11,6	29	3200	4300					**81103**
17,6	44	2800	3800					**81104**
24	65,5	2200	3200					**81105**
24,5	69,5	2000	3000					**81106**
50	134	1700	2400					**81206**
69	197	1600	2200					**89306**
27	83	1900	2800					**81107**
62	190	1500	2000					**81207**
80	237	1400	2000					**89307**
38	118	1700	2400					**81108**
83	255	1400	1900					**81208**
122	385	1200	1500					**89308**
40,5	132	1600	2200					**81109**
86,5	270	1300	1800					**81209**
139	445	1120	1400					**89309**
42,5	146	1600	2200					**81110**
91,5	300	1200	1700					**81210**
167	560	960	1200					**89310**
69,5	285	1400	1900					**81111**
116	365	950	1400					**81211**
184	600	930	1300					**89311**
80	300	1300	1800					**81112**
137	465	950	1400					**81212**
196	670	880	1100					**89312**
390	1220	720	900					**89412**
83	320	1200	1700					**81113**
140	490	900	1300					**81213**
194	670	880	1100					**89313**
445	1410	640	800					**89413**
86,5	345	1200	1700					**81114**
146	530	900	1300					**81214**
239	830	800	1000					**89314**
475	1500	640	800					**89414**
75	290	1100	1600					**81115**
125	440	850	1200					**81215**
285	1010	720	900					**89315**
500	1580	640	800					**89415**
76,5	300	1000	1500					**81116**
160	610	850	1200					**81216**
305	1110	640	800					**89316**
560	1770	600	750					**89416**

* Other products also available

https://nppnovoteh.com

10. CYLINDRICAL ROLLER THRUST BEARINGS

10.1. Cylindrical roller thrust bearings



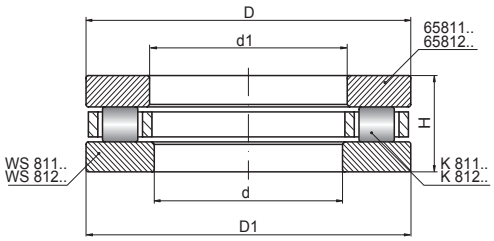

811.. 812..

85 – 190 mm

Shaft [mm]	Bearing No.	cylindrical roller and cage assembly	Ring		Dimensions [mm]					Weight [kg]		
			outer	inner	d	d1	D	D1	H	bearing	cage assembly	any given ring
85	**81117**	K 81117	GS 81117	WS 81117	85	87	110	110	19	0,420	0,118	0,151
	81217	K 81217	GS 81217	WS 81217	85	88	125	125	31	1,300	0,280	0,490
	89317	K 89317	GS 89317	WS 89317	85	88	150	150	13,5	3,000	0,540	1,230
	89417	K 89417	GS 89417	WS 89417	85	88	180	180	19,5	8,650	2,710	2,970
90	**81118**	K 81118	GS 81118	WS 81118	90	92	120	120	22	0,640	0,150	0,225
	81218	K 81218	GS 81218	WS 81218	90	93	135	135	35	1,750	0,542	0,614
	89318	K 89318	GS 89318	WS 89318	90	93	155	155	14	3,280	0,620	1,330
	89418	K 89418	GS 89418	WS 89418	90	93	190	190	20	9,940	3,040	3,450
100	**81120**	K 81120	GS 81120	WS 81120	100	102	135	135	25	1,000	0,250	0,350
	81220	K 81220	GS 81220	WS 81220	100	103	150	150	38	2,200	0,600	0,800
	89320	K 89320	GS 89320	WS 89320	100	103	170	170	14,5	4,190	0,810	1,690
	89420	K 89420	GS 89420	WS 89420	100	103	210	210	22,5	13,420	3,920	4,750
110	**81122**	K 81122	GS 81122	WS 81122	110	112	145	145	25	1,100	0,270	0,385
	81222	K 81222	GS 81222	WS 81222	110	113	160	160	38	2,450	0,530	0,880
	89322	K 89322	GS 89322	WS 89322	110	113	190	190	16,5	6,550	1,670	2,440
	89422	K 89422	GS 89422	WS 89422	110	113	230	230	24,5	17,410	5,110	6,150
120	**81124**	K 81124	GS 81124	WS 81124	120	122	155	155	25	1,150	0,290	0,415
	81224	K 81224	GS 81224	WS 81224	120	123	170	170	39	2,700	0,580	0,980
	89324	K 89324	GS 89324	WS 89324	120	123	210	210	18,5	9,240	2,440	3,400
	89424	K 89424	GS 89424	WS 89424	120	123	250	250	26	21,770	6,370	7,700
130	**81126**	K 81126	GS 81126	WS 81126	130	132	170	170	30	1,700	0,380	0,643
	81226	K 81226	GS 81226	WS 81226	130	133	190	187	45	4,200	0,920	1,530
	89326	K 89326	GS 89326	WS 89326	130	134	225	225	20	10,000	1,910	4,045
	89426	K 89426	GS 89426	WS 89426	130	134	270	270	28,5	29,960	7,960	9,500
140	**81128**	K 81128	GS 81128	WS 81128	140	142	180	178	31	1,950	0,400	0,749
	81228	K 81228	GS 81228	WS 81228	140	143	200	197	46	4,550	1,197	1,635
	89328	K 89328	GS 89328	WS 89328	140	144	240	240	20,5	11,990	2,390	4,800
	89428	K 89428	GS 89428	WS 89428	140	144	280	280	28,5	29,700	8,540	10,600
150	**81130**	K 81130	GS 81130	WS 81130	150	152	190	188	31	2,050	0,430	0,796
	81230	K 81230	GS 81230	WS 81230	150	153	215	212	50	5,900	1,520	2,180
	89330	K 89330	GS 89330	WS 89330	150	154	250	250	20,5	12,630	2,510	5,060
	89430	K 89430	GS 89430	WS 89430	150	154	300	300	30	35,360	10,360	12,500
160	**81132**	K 81132	GS 81132	WS 81132	160	162	200	198	31	2,200	0,440	0,842
	81232	K 81232	GS 81232	WS 81232	160	163	225	222	51	6,200	3,360	2,300
	89432	K 89432	GS 89432	WS 89432	160	164	320	320	31,5	42,000	12,420	14,800
170	**81134**	K 81134	GS 81134	WS 81134	170	172	215	213	34	2,950	0,660	1,100
	81234	K 81234	GS 81234	WS 81234	170	173	240	237	55	7,700	1,890	2,900
	89434	K 89434	GS 89434	WS 89434	170	174	340	340	34,5	51,870	14,870	18,500
180	**81136**	K 81136	GS 81136	WS 81136	180	183	225	222	34	3,050	0,800	1,120
	81236	K 81236	GS 81236	WS 81236	180	183	250	247	56	8,250	1,980	3,130
	89436	K 89436	GS 89436	WS 89436	180	184	360	360	36,5	60,190	17,590	21,300
190	**81138**	K 81138	GS 81138	WS 81138	190	193	240	237	37	3,850	0,940	1,450
	81238	K 81238	GS 81238	WS 81238	190	194	270	267	62	10,500	2,730	3,835
	89438	K 89438	GS 89438	WS 89438	190	195	380	380	38,5	65,700	14,500	25,600

- warehouse - order - phone

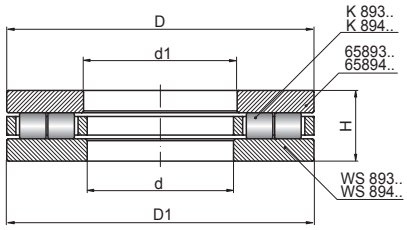

893.. 894..

Basic load ratings [kN]		Limiting speed [rpm]		Basic makes*				Bearing No.
dyn.C	stat.C_0	grease	oil		M	TN	P5	
76,5	310	1000	1500	◴	◴	↷	↷	**81117**
153	550	800	1100	↷	↷	↷	↷	**81217**
325	1140	680	850	↷	↷	↷	↷	**89317**
620	1980	560	700	↷	↷	↷	↷	**89417**
104	415	900	1300	◴	◴	↷	↷	**81118**
232	865	750	1000	↷	↷	↷	↷	**81218**
335	1200	640	800	↷	↷	↷	↷	**89318**
680	2200	520	650	↷	↷	↷	↷	**89418**
146	585	850	1200	◴	◴	↷	↷	**81120**
224	830	670	900	↷	↷	↷	↷	**81220**
380	1400	600	750	↷	↷	↷	↷	**89320**
850	2850	440	550	↷	↷	↷	↷	**89420**
153	630	800	1100	↷	↷	↷	↷	**81122**
240	915	630	850	↷	↷	↷	↷	**81222**
500	1870	480	600	↷	↷	↷	↷	**89322**
1000	3400	376	470	↷	↷	↷	↷	**89422**
160	680	800	1100	↷	↷	↷	↷	**81124**
245	965	600	800	↷	↷	↷	↷	**81224**
640	2420	400	500	↷	↷	↷	↷	**89324**
1170	4000	344	430	↷	↷	↷	↷	**89424**
183	780	700	950	↷	↷	↷	↷	**81126**
335	1250	530	700	↷	↷	↷	↷	**81226**
710	2700	384	480	↷	↷	↷	↷	**89326**
1330	4600	312	390	↷	↷	↷	↷	**89426**
193	850	670	900	↷	↷	↷	↷	**81128**
360	1400	530	700	↷	↷	↷	↷	**81228**
820	3200	336	420	↷	↷	↷	↷	**89328**
1390	4950	288	360	↷	↷	↷	↷	**89428**
200	900	630	850	↷	↷	↷	↷	**81130**
465	1900	480	630	↷	↷	↷	↷	**81230**
840	3350	320	400	↷	↷	↷	↷	**89330**
1570	5700	264	330	↷	↷	↷	↷	**89430**
204	965	630	850	↷	↷	↷	↷	**81132**
480	2000	450	600	↷	↷	↷	↷	**81232**
1780	6500	248	310	↷	↷	↷	↷	**89432**
260	1180	600	800	↷	↷	↷	↷	**81134**
540	2280	430	560	↷	↷	↷	↷	**81234**
1990	7400	224	280	↷	↷	↷	↷	**89434**
270	1270	560	750	↷	↷	↷	↷	**81136**
550	2400	430	560	↷	↷	↷	↷	**81236**
2210	8200	216	270	↷	↷	↷	↷	**89436**
270	1270	560	750	↷	↷	↷	↷	**81138**
695	2900	380	500	↷	↷	↷	↷	**81238**
2450	9200	200	250	↷	↷	↷	↷	**89438**

* Other products also available

https://nppnovoteh.com

10. CYLINDRICAL ROLLER THRUST BEARINGS

10.1. Cylindrical roller thrust bearings



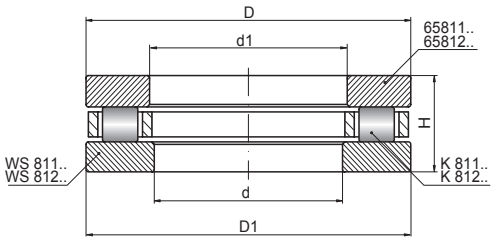

811.. 812..

200 – 480 mm

Shaft [mm]	Bearing No.	cylindrical roller and cage assembly	Ring		Dimensions [mm]					Weight [kg]		
			outer	inner	d	d1	D	D1	H	bearing	cage assembly	any given ring
200	**81140**	K 81140	GS 81140	WS 81140	200	203	250	247	37	4,000	0,980	1,510
	81240	K 81240	GS 81240	WS 81240	200	204	280	277	62	12,000	3,090	4,410
	89440	K 89440	GS 89440	WS 89440	200	205	400	400	41	74,800	16,200	29,300
220	**81144**	K 81144	GS 81144	WS 81144	220	223	270	267	37	4,500	1,320	1,590
	81244	K 81244	GS 81244	WS 81244	220	224	300	297	63	13,000	3,350	4,750
	89444	K 89444	GS 89444	WS 89444	220	225	420	420	41	84,400	20,000	32,200
240	**81148**	K 81148	GS 81148	WS 81148	240	243	300	297	45	7,250	2,110	2,570
	81248	K 81248	GS 81248	WS 81248	240	244	340	335	78	22,000	5,650	8,150
	89448	K 89448	GS 89448	WS 89448	240	245	440	440	41	87,800	19,200	34,300
260	**81152**	K 81152	GS 81152	WS 81152	260	263	320	317	45	7,850	2,300	2,765
	81252	K 81252	GS 81252	WS 81252	260	264	360	355	79	24,000	6,100	8,900
	89452	K 89452	GS 89452	WS 89452	260	265	480	480	44	114,000	25,500	44,250
280	**81156**	K 81156	GS 81156	WS 81156	280	283	350	347	53	10,500	3,000	3,650
	81256	K 81256	GS 81256	WS 81256	280	284	380	375	80	26,000	6,400	9,750
	89456	K 89456	GS 89456	WS 89456	280	285	520	520	48,5	142,000	30,800	55,600
300	**81160**	K 81160	GS 81160	WS 81160	300	304	380	376	62	16,500	4,830	5,920
	81260	K 81260	GS 81260	WS 81260	300	304	420	415	95	40,500	10,150	15,200
	89460	K 89460	GS 89460	WS 89460	300	305	540	540	48,5	153,000	32,700	60,150
320	**81164**	K 81164	GS 81164	WS 81164	320	324	400	396	63	18,000	5,120	6,350
	81264	K 81264	GS 81264	WS 81264	320	325	440	435	95	42,500	11,000	15,750
	89464	K 89464	GS 89464	WS 89464	320	325	580	575	43,5	193,000	70,000	61,500
340	**81168**	K 81168	GS 81168	WS 81168	340	344	420	416	64	19,500	5,600	6,950
	81268	K 81268	GS 81268	WS 81268	340	345	460	455	96	47,000	12,200	17,400
360	**81172**	K 81172	GS 81172	WS 81172	360	364	440	436	65	19,500	5,500	7,000
	81272	K 81272	GS 81272	WS 81272	360	365	500	495	110	65,500	17,000	24,250
380	**81176**	K 81176	GS 81176	WS 81176	380	384	460	456	65	22,000	6,300	7,850
	81276	K 81276	GS 81276	WS 81276	380	385	520	515	112	70,000	18,100	25,950
400	**81180**	K 81180	GS 81180	WS 81180	400	404	480	476	65	23,000	6,600	8,200
	81280	K 81280	GS 81280	WS 81280	400	405	540	535	112	73,000	18,900	27,050
420	**81184**	K 81184	GS 81184	WS 81184	420	424	500	495	65	24,000	6,900	8,550
	81284	K 81284	GS 81284	WS 81284	420	425	580	575	130	95,500	24,700	35,400
440	**81188**	K 81188	GS 81188	WS 81188	440	444	540	535	80	39,500	11,300	14,100
	81288	K 81288	GS 81288	WS 81288	440	445	600	595	130	110,000	28,500	40,750
460	**81192**	K 81192	GS 81192	WS 81192	460	464	560	555	80	41,000	11,700	14,650
	81292	K 81292	GS 81292	WS 81292	460	465	620	615	130	118,000	30,600	43,700
480	**81196**	K 81196	GS 81196	WS 81196	480	484	580	575	80	43,000	12,300	15,350
	81296	K 81296	GS 81296	WS 81296	480	485	650	645	135	128,000	33,200	47,400
500	**811/500**	K 811/500	GS 811/500	WS 811/500	500	505	600	595	80	44,000	12,600	15,700
	812/500	K 812/500	GS 812/500	WS 812/500	500	505	670	665	135	133,000	34,500	49,300

- warehouse - order - phone

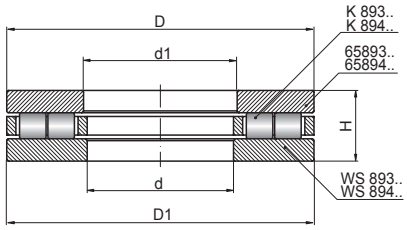

893.. 894..

Basic load ratings [kN]		Limiting speed [rpm]		Basic makes*				Bearing No.
dyn.C	stat.C_0	grease	oil		M	TN	P5	
310	1500	530	700	✓	✓	✓	✓	**81140**
720	3100	380	500	✓	✓	✓	✓	**81240**
2700	10200	184	230	✓	✓	✓	✓	**89440**
335	1700	500	670	✓	✓	✓	✓	**81144**
750	3350	360	480	✓	✓	✓	✓	**81244**
2900	11500	160	200	✓	✓	✓	✓	**89444**
475	2450	430	560	✓	✓	✓	✓	**81148**
1100	4900	300	400	✓	✓	✓	✓	**81248**
3000	12200	152	190	✓	✓	✓	✓	**89448**
490	2600	400	530	✓	✓	✓	✓	**81152**
1140	5300	280	380	✓	✓	✓	✓	**81252**
3600	14700	136	170	✓	✓	✓	✓	**89452**
680	3550	360	480	✓	✓	✓	✓	**81156**
1160	5500	260	360	✓	✓	✓	✓	**81256**
4200	17600	120	150	✓	✓	✓	✓	**89456**
850	4400	320	430	✓	✓	✓	✓	**81160**
1530	7200	220	320	✓	✓	✓	✓	**81260**
4350	18500	120	150	✓	✓	✓	✓	**89460**
880	4650	300	400	✓	✓	✓	✓	**81164**
1560	7500	200	300	✓	✓	✓	✓	**81264**
5500	19900	112	140	✓	✓	✓	✓	**89464**
900	4900	280	380	✓	✓	✓	✓	**81168**
1630	8000	200	300	✓	✓	✓	✓	**81268**
915	5000	280	380	✓	✓	✓	✓	**81172**
2160	10400	180	260	✓	✓	✓	✓	**81272**
930	5300	260	360	✓	✓	✓	✓	**81176**
2200	10800	180	260	✓	✓	✓	✓	**81276**
965	5600	260	360	✓	✓	✓	✓	**81180**
2240	11200	170	240	✓	✓	✓	✓	**81280**
980	5850	240	340	✓	✓	✓	✓	**81184**
2850	14000	160	220	✓	✓	✓	✓	**81284**
1430	8000	200	300	✓	✓	✓	✓	**81188**
2900	14600	160	220	✓	✓	✓	✓	**81288**
1460	8500	200	300	✓	✓	✓	✓	**81192**
3000	15300	150	200	✓	✓	✓	✓	**81292**
1460	8650	190	280	✓	✓	✓	✓	**81196**
3350	17000	150	200	✓	✓	✓	✓	**81296**
1530	9150	190	280	✓	✓	✓	✓	**811/500**
3400	17600	140	190	✓	✓	✓	✓	**812/500**

* Other products also available

https://nppnovoteh.com

10. CYLINDRICAL ROLLER THRUST BEARINGS

10.1. Cylindrical roller thrust bearings



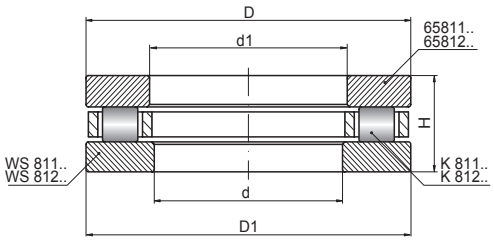

811.. 812..

530 – 630 mm

Shaft [mm]	Bearing No.	cylindrical roller and cage assembly	Ring		Dimensions [mm]					Weight [kg]		
			outer	inner	d	d1	D	D1	H	bearing	cage assembly	any given ring
530	**811/530**	K 811/530	GS 811/530	WS 811/530	530	535	640	635	85	55,500	15,900	19,800
	812/530	K 812/530	GS 812/530	WS 812/530	530	535	710	705	140	154,000	39,900	57,000
560	**811/560**	K 811/560	GS 811/560	WS 811/560	560	565	670	665	85	58,000	16,600	20,700
	812/560	K 812/560	GS 812/560	WS 812/560	560	565	750	745	150	187,000	48,500	69,200
600	**811/600**	K 811/600	GS 811/600	WS 811/600	600	605	710	705	85	62,000	17,700	22,100
	812/600	K 812/600	GS 812/600	WS 812/600	600	605	800	795	160	240,000	62,300	88,900
630	**811/630**	K 811/630	GS 811/630	WS 811/630	630	634	750	746	95	80,000	22,900	28,600

- warehouse - order - phone

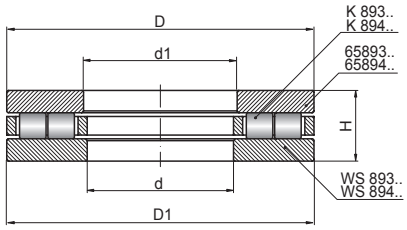

893.. 894..

Basic load ratings [kN]		Limiting speed [rpm]		Basic makes*				Bearing No.
dyn.C	stat.C_0	grease	oil		M	TN	P5	
1700	10400	180	260	✓	✓	✓	✓	**811/530**
3800	20000	130	180	✓	✓	✓	✓	**812/530**
1760	10800	180	260	✓	✓	✓	✓	**811/560**
3900	20800	120	170	✓	✓	✓	✓	**812/560**
1760	11200	170	240	✓	✓	✓	✓	**811/600**
4400	24000	110	160	✓	✓	✓	✓	**812/600**
2160	13700	160	220	✓	✓	✓	✓	**811/630**

* Other products also available

https://nppnovoteh.com

11. NEEDLE ROLLER THRUST BEARINGS

ROLLING BEARINGS

ŁOZYSKA TOCZNE



CINETTI

ŁOZYSKA TOC

https://nppnovoteh.com

TABLES:

11. NEEDLE ROLLER THRUST BEARINGS
11.1. Thrust needle roller and cage assemblies - AXK

INTRODUCTION:

11. Thrust needle roller and cage assemblies - AXK

11.1. Dimension series

- **AXK..** – Thrust needle roller and cage assemblies - AXK
- **AS.. LS..** – mating rings
- **GS811.. WS811** – alternative mating rings

11.2. Structure, features and application

As far as their structure is concerned they are deceptively similar to 811-series cylindrical roller bearings, but in this case needles are the rolling elements. Depending on constructional needs AXK needle thrust cages are available separately, then interacting with appropriately made machine's elements or with special, alternative mating rings. Rings are chosen according to construction requirements, demanded parameters for load carrying capacity and amount of space available for bearing mounting. 811-Series cylindrical roller thrust bearings' rings are implemented here as alternative i.e. WS811.. and GS811..

Needle roller thrust bearings and needle thrust cages are characterized by the minimal cross-section among all types of thrust bearings, what allows to implement them wherever there is very little space for mounting a bearing. Needle roller thrust bearings' cages are usually made of steel, but cages made of thermoplastic material (TN mark behind the symbol) are also available.

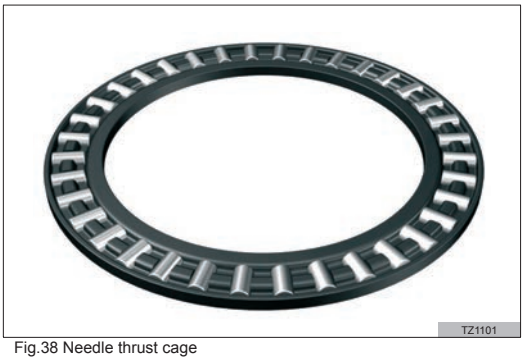

Fig.38 Needle thrust cage

https://nppnovoteh.com

11. NEEDLE ROLLER THRUST BEARINGS

11.1. Thrust needle roller and cage assemblies - AXK

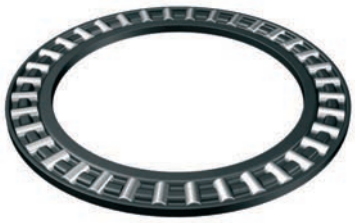

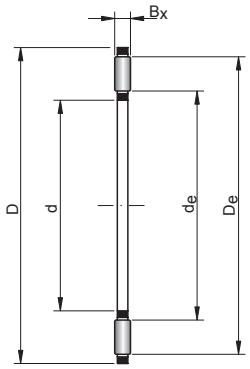

AXK..

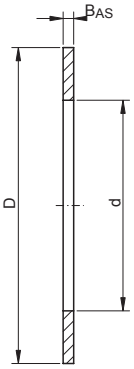

AS..

d [mm]	Needle roller and cage assemblies							Mating rings					
	AXK..	Dimensions [mm]					Weight [g]	AS..	Weight [g]	LS..	Weight [g]	GS811..	Weight [g]
		d	D	de	De	Bx							
4	**AXK 0414**	4	14	5	13	2	0,7	AS 0414	1	-	-	-	-
5	**AXK 0515**	5	15	6	14	2	0,8	AS 0515	1	-	-	-	-
6	**AXK 0619**	6	19	7	18	2	1	AS 0619	2	LS 0619	4	-	4
8	**AXK 0821**	8	21	9	20	2	2	AS 0821	2	LS 0821	4	-	4
10	**AXK 1024**	10	24	12	23	2	3	AS 1024	3	LS 1024	7	-	7
12	**AXK 1226**	12	26	14	25	2	3	AS 1226	3	LS 1226	8	-	8
15	**AXK 1528**	15	28	17	27	2	4	AS 1528	3	LS 1528	9	GS 81102	9
17	**AXK 1730**	17	30	19	29	2	4	AS 1730	4	LS 1730	9	GS 81103	9
20	**AXK 2035**	20	35	22	34	2	5	AS 2035	5	LS 2035	13	GS 81104	13
25	**AXK 2542**	25	42	29	41	2	7	AS 2542	7	LS 2542	19	GS 81105	19
30	**AXK 3047**	30	47	34	46	2	8	AS 3047	8	LS 3047	22	GS 81106	22
35	**AXK 3552**	35	52	39	51	2	10	AS 3552	9	LS 3552	29	GS 81107	29
40	**AXK 4060**	40	60	45	58	3	16	AS 4060	12	LS 4060	40	GS 81108	40
45	**AXK 4565**	45	65	50	63	3	18	AS 4565	13	LS 4565	50	GS 81109	50
50	**AXK 5070**	50	70	55	68	3	20	AS 5070	14	LS 5070	55	GS 81110	55
55	**AXK 5578**	55	78	60	76	3	28	AS 5578	18	LS 5578	88	GS 81111	88
60	**AXK 6085**	60	85	65	83	3	33	AS 6085	22	LS 6085	97	GS 81112	97
65	**AXK 6590**	65	90	70	88	3	35	AS 6590	24	LS 6590	115	GS 81113	115
70	**AXK 7095**	70	95	74	93	4	60	AS 7095	25	LS 7095	123	GS 81114	123
75	**AXK 75100**	75	100	79	98	4	61	AS 75100	27	LS 75100	142	GS 81115	142
80	**AXK 80105**	80	105	84	103	4	63	AS 80105	28	LS 80105	151	GS 81116	151
85	**AXK 85110**	85	110	89	108	4	67	AS 85110	29	LS 85110	159	GS 81117	159
90	**AXK 90120**	90	120	94	118	4	86	AS 90120	39	LS 90120	234	GS 81118	234
100	**AXK 100135**	100	135	105	133	4	104	AS 100135	50	LS 100135	350	GS 81120	350
110	**AXK 110145**	110	145	115	143	4	122	AS 110145	55	LS 110145	385	GS 81122	385
120	**AXK 120155**	120	155	125	153	4	131	AS 120155	59	LS 120155	415	GS 81124	415
130	**AXK 130170**	130	170	136	167	5	205	AS 130170	65	LS 130170	663	GS 81126	663
140	**AXK 140180**	140	180	146	177	5	219	AS 140180	79	LS 140180	749	GS 81128	749
150	**AXK 150190**	150	190	156	187	5	232	AS 150190	84	LS 150190	796	GS 81130	796
160	**AXK 160200**	160	200	166	197	5	246	AS 160200	89	LS 160200	842	GS 81132	842

- warehouse - order - phone

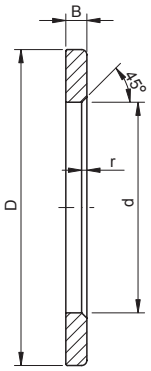

LS..

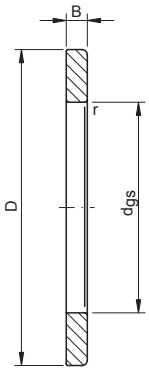

GS 811..

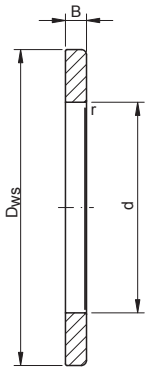

WS 811..

Mating rings							Basic load ratings [kN]		Rotational speed [kN]		Basic makes		Bearing No.
WS811..	Weight [g]	Dimensions [mm]											
		dgs	Dws	B	Bas	r	dyn.	stat.	reference	limiting	-	TN	AXK..
-	-	-	-	-	1	-	4,4	8	9900	18900	◴	◴	**AXK 0414**
-	-	-	-	-	1	-	4,75	9,2	8550	18900	◴	◴	**AXK 0515**
-	4	-	-	2,75	1	0,3	6,8	15,5	7200	17100	◴	◴	**AXK 0619**
-	4	-	-	2,75	1	0,3	7,8	19,4	5850	16200	◴	◴	**AXK 0821**
-	7	-	-	2,75	1	0,3	9,2	25,5	4950	15300	◴	◴	**AXK 1024**
-	8	-	-	2,75	1	0,3	9,9	29	4230	13500	◴	◴	**AXK 1226**
WS 81102	9	16	28	2,75	1	0,3	11,3	36	3240	11700	◴	◴	**AXK 1528**
WS 81103	9	18	30	2,75	1	0,3	11,9	39,5	2880	10800	◴	◴	**AXK 1730**
WS 81104	13	21	35	2,75	1	0,3	13,1	46,5	2790	9000	◴	◴	**AXK 2035**
WS 81105	19	26	42	3	1	0,6	14,7	58	2520	7650	◴	◴	**AXK 2542**
WS 81106	22	32	47	3	1	0,6	16,3	70	2070	6750	◴	◴	**AXK 3047**
WS 81107	29	37	52	3,5	1	0,6	17,8	81	1800	5850	◴	◴	**AXK 3552**
WS 81108	40	42	60	3,5	1	0,6	28	114	1530	5400	◴	◴	**AXK 4060**
WS 81109	50	47	65	4	1	0,6	30	128	1350	4500	◴	◴	**AXK 4565**
WS 81110	55	52	70	4	1	0,6	32	143	1260	4320	◴	◴	**AXK 5070**
WS 81111	88	57	78	5	1	0,6	38	186	1080	3870	◴	◴	**AXK 5578**
WS 81112	97	62	85	4,75	1	1	44,5	234	990	3600	◴	◴	**AXK 6085**
WS 81113	115	67	90	5,25	1	1	46,5	255	900	3330	◴	◴	**AXK 6590**
WS 81114	123	72	95	5,25	1	1	54	255	900	3150	◴	◴	**AXK 7095**
WS 81115	142	77	100	5,75	1	1	55	265	855	2970	◴	◴	**AXK 75100**
WS 81116	151	82	105	5,75	1	1	56	280	810	2790	◴	◴	**AXK 80105**
WS 81117	159	87	110	5,75	1	1	58	290	765	2700	◴	◴	**AXK 85110**
WS 81118	234	92	120	6,5	1	1	73	405	675	2430	◴	◴	**AXK 90120**
WS 81120	350	102	135	7	1	1	91	560	585	2250	◴	◴	**AXK 100135**
WS 81122	385	112	145	7	1	1	97	620	540	2070	◴	◴	**AXK 110145**
WS 81124	415	122	155	7	1	1	102	680	495	1890	◴	◴	**AXK 120155**
WS 81126	663	132	170	9	1	1	133	840	450	1710	◴	◴	**AXK 130170**
WS 81128	749	142	178	9,5	1	1	138	900	432	1620	◴	◴	**AXK 140180**
WS 81130	796	152	188	9,5	1	1	143	960	396	1530	◴	◴	**AXK 150190**
WS 81132	842	162	198	9,5	1	1	148	1020	378	1440	◴	◴	**AXK 160200**

* Other products also available

https://nppnovoteh.com

12. SPHERICAL ROLLER THRUST BEARINGS



https://nppnovoteh.com

TABLES:

12. SPHERICAL ROLLER THRUST BEARINGS

12.1. Spherical roller thrust bearings

INTRODUCTION:

12. Spherical roller thrust bearings

12.1 Dimension series

- **292.. 293.. 294..**

12.2. Structure

Spherical roller thrust bearings are single-row detachable bearings consisting of a cage, which holds a set of asymmetrically arranged spherical rollers and is not separable from the inner ring, and of a free outer ring. Owing to such construction the mounting of the inner ring together with a set of spherical rollers and the mounting of the outer ring can be carried out separately.

12.3. Cages

Cages of spherical roller thrust bearings are mostly made of brass and occasionally of steel.

12.4. Features

Spherical roller thrust bearings carry loads obliquely to the bearing axis from one track to the other. These bearings are also suitable– in contrast with other thrust bearings – for accommodating radial loads with simultaneously acting axial loads. The other important feature is also the self-alignment ability, connected with the resistance to shaft deflection and errors of alignment. Depending on the bearing-series, load, rotational speed and the fact which ring rotates, the ability of angular displacement ranges from 1° to 3°. A sine qua non of effective performance of spherical roller thrust bearings is that the level of axial load must exceed 55% of the radial load value. If external load and the weight of machine parts leaning on the bearing are smaller than the minimal required axial load, additional axial load must be applied, e.g. with the help of springs.

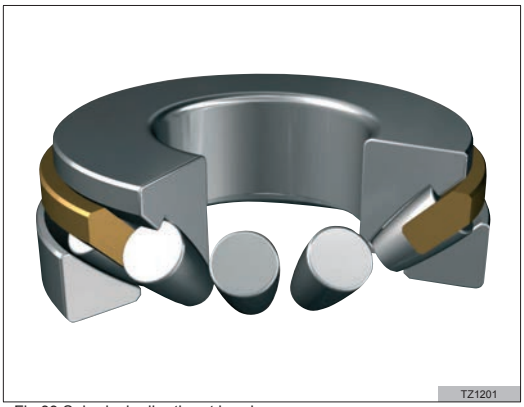

Fig.39 Spherical roller thrust bearing

12.5. Application

Unique features – extremely high load carrying capacity and, at the same time, the ability to support high velocities – result in charging spherical roller thrust bearings more than once with very responsible tasks. They are applied in heavy industry (machine industry), iron and steel industry and extractive industry in the first place.

12.6. Comparing features of thrust ball bearings and spherical roller thrust bearings

Parameters / Bering type	53320	29320
Dynamic capacity [kN]	236	408
Rotational speed (grease) [r./min.]	940	1500

The table shown above serves as a comparison of capabilities of thrust ball bearings and spherical roller thrust bearings. In that case both load capacity parameters and parameters describing rotational speed of spherical roller bearings are better. Also, one shall not forget that spherical roller thrust bearings, on account of the oblique placement of spherical rollers in relation to the bearing axis, are able to carry both types of loads.

https://nppnovoteh.com

12. SPHERICAL ROLLER THRUST BEARINGS

12.1.Spherical roller thrust bearings



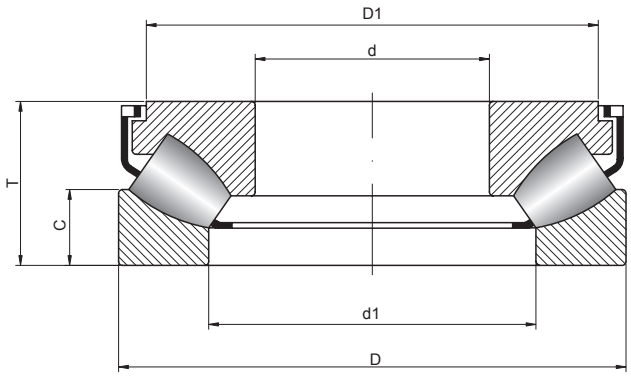

292.. 293.. 294..

60 – 240 mm

Shaft [mm]	Bearing No.	Series		Dimensions [mm]						Weight [kg]
		SD	ST	d	d1	D	D1	C	T	
60	**29412 M**	4	9	60	89	130	123	20	42	2,6
65	**29413 M**	4	9	65	96	140	133	21	45	3,2
70	**29414 M**	4	9	70	103	150	142	23	48	3,9
75	**29415 M**	4	9	75	109	160	152	24	51	4,7
80	**29416 M**	4	9	80	117	170	162	26	54	5,6
85	**29317 M**	3	9	85	114	150	143,5	19	39	2,82
	29417 M	4	9	85	125	180	170	28	58	6,75
90	**29318 M**	3	9	90	117	155	148,5	19	39	2,85
	29418 M	4	9	90	132	190	180	29	60	7,75
100	**29320 M**	3	9	100	129	170	163	20,8	42	3,65
	29420 M	4	9	100	146	210	200	32	67	10,5
110	**29322 M**	3	9	110	143	190	182	23	48	5,3
	29422 M	4	9	110	162	230	220	35	73	13,5
120	**29324 M**	3	9	120	159	210	200	26	54	7,35
	29424 M	4	9	120	174	250	236	37	78	17,5
130	**29326 M**	3	9	130	171	225	215	28	58	9
	29426 M	4	9	130	189	270	255	41	85	22
140	**29328 M**	3	9	140	183	240	230	29	60	10,5
	29428 M	4	9	140	199	280	268	41	85	23
150	**29330 M**	3	9	150	194	250	240	29	60	11
	29430 M	4	9	150	214	300	285	44	90	28
160	**29332 M**	3	9	160	208	270	260	32	67	14,5
	29432 M	4	9	160	229	320	306	45	95	33,5
170	**29334 M**	3	9	170	216	280	270	32	67	15
	29434 M	4	9	170	243	340	324	50	103	44,5
180	**29336 M**	3	9	180	232	300	290	35	73	19,5
	29436 M	4	9	180	255	360	342	52	109	52,5
190	**29338 M**	3	9	190	246	320	308	38	78	23,5
	29438 M	4	9	190	271	380	360	55	115	60,5
200	**29240 M**	2	9	200	236	280	271	24	48	8,9
	29340 M	3	9	200	261	340	325	41	85	29,5
	29440 M	4	9	200	286	400	380	59	122	72
220	**29244 M**	2	9	220	254	300	292	24	48	10
	29344 M	3	9	220	280	360	345	41	85	34,5
	29444 M	4	9	220	308	420	400	58	122	75
240	**29248 M**	2	9	240	283	340	330	30	60	16,7
	29348 M	3	9	240	300	380	365	41	85	36,3

- warehouse - order - phone



Basic load ratings [kN]		Limiting speed [rpm]		Basic makes*		Bearing No.
dyn. C	stat. C_0	grease	oil	-	EC	
345	915	1800	2600	●	●	**29412 M**
397	1080	1700	2400	●	●	**29413 M**
449	1250	1600	2200	●	●	**29414 M**
518	1430	1600	2200	●	●	**29415 M**
575	1630	1500	2000	●	●	**29416 M**
287	927	1700	2300	●	◴	**29317 M**
633	1800	1300	1800	●	●	**29417 M**
345	1080	1600	2200	●	◴	**29318 M**
702	2000	1300	1800	●	◴	**29418 M**
408	1290	1500	2000	●	◴	**29320 M**
863	2500	1100	1600	●	◴	**29420 M**
535	1730	1300	1800	●	◴	**29322 M**
1010	3000	950	1400	●	◴	**29422 M**
656	2120	1100	1600	●	◴	**29324 M**
1170	3450	900	1300	●	◴	**29424 M**
753	2500	1000	1500	●	◴	**29326 M**
1380	4050	850	1200	●	◴	**29426 M**
845	2850	950	1400	●	◴	**29328 M**
1400	4300	850	1200	●	◴	**29428 M**
863	2850	950	1400	●	◴	**29330 M**
1610	5100	800	1100	●	◴	**29430 M**
1010	3450	850	1200	●	◴	**29332 M**
1790	5600	750	1000	●	◴	**29432 M**
1050	3550	850	1200	●	◴	**29334 M**
2020	6550	700	950	●	◴	**29434 M**
1240	4300	800	1100	●	◴	**29336 M**
2250	7350	670	900	●	◴	**29436 M**
1400	4750	750	1000	●	◴	**29338 M**
2480	8000	630	850	●	◴	**29438 M**
536	2270	-	1400	◴	◴	**29240 M**
1610	5500	700	950	●	◴	**29340 M**
2760	9000	600	800	●	◴	**29440 M**
542	2490	-	1300	◴	◴	**29244 M**
1730	6300	700	950	◴	◴	**29344 M**
2880	9650	560	750	●	◴	**29444 M**
822	3680	-	1100	◴	◴	**29248 M**
1790	6550	670	900	◴	◴	**29348 M**

* Other products also available

https://nppnovoteh.com

12. SPHERICAL ROLLER THRUST BEARINGS

12.1.Spherical roller thrust bearings



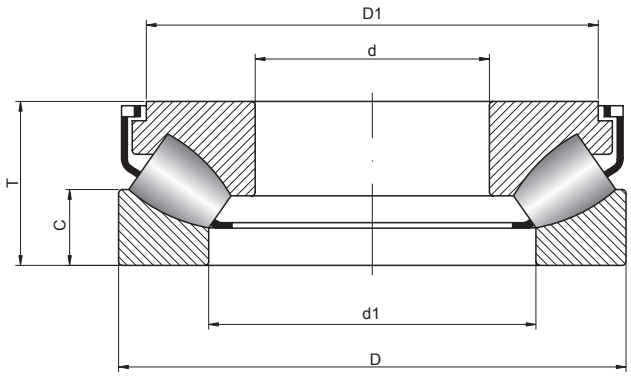

292.. 293.. 294..

240 – 560 mm

Shaft [mm]	Bearing No.	Series		Dimensions [mm]						Weight [kg]
		SD	ST	d	d1	D	D1	C	T	
240 cont.	**29448 M**	4	9	240	326	440	420	59	122	80
260	**29252 M**	2	9	260	302	360	350	30	60	18,5
	29352 M	3	9	260	329	420	405	45	95	51,5
	29452 M	4	9	260	357	480	460	64	132	104
280	**29256 M**	2	9	280	323	380	370	30	60	19,5
	29456 M	4	9	280	387	520	495	68	145	134
300	**29260 M**	2	9	300	353	420	405	38	73	30,5
	29360 M	3	9	300	379	480	460	50	109	75,4
320	**29264 M**	2	9	320	372	440	430	38	73	32,9
	29364 M	3	9	320	399	500	482	53	109	80
	29464 M	4	9	320	435	580	555	75	155	175
340	**29268 M**	2	9	340	395	460	445	37	73	33,6
	29368 M	3	9	340	428	540	520	59	122	96,3
	29468 M	4	9	340	462	620	590	82	170	221
360	**29272 M**	2	9	360	423	500	485	44	85	51,8
	29372 M	3	9	360	448	560	540	59	122	101
	29472 M	4	9	360	480	640	610	82	170	231
380	**29276 M**	2	9	380	441	520	505	42	85	52,8
	29376 M	3	9	380	477	600	580	63	132	129
	29476 M	4	9	380	504	670	640	85	175	261
400	**29280 M**	2	9	400	460	540	526	42	85	55,3
	29380 M	3	9	400	494	620	596	64	132	134
420	**29284 M**	2	9	420	489	580	564	46	95	75,4
	29384 M	3	9	420	520	650	626	68	140	154
440	**29288 M**	2	9	440	508	600	585	49	95	77,9
	29388 M	3	9	440	548	680	655	70	145	172
	29488 M	4	9	440	588	780	745	100	206	410
460	**29292 M**	2	9	460	530	620	605	46	95	81
	29392 M	3	9	460	567	710	685	72	150	199
	29492 M	4	9	460	608	800	765	100	206	425
480	**29296 M**	2	9	480	556	650	635	55	103	89
	29396 M	3	9	480	590	730	705	72	150	204
	29496 M	4	9	480	638	850	810	108	224	550
500	**292/500 M**	2	9	500	574	670	654	55	103	101
	293/500 M	3	9	500	611	750	725	74	150	233
	294/500 M	4	9	500	661	870	830	107	224	560
530	**292/530 M**	2	9	530	612	710	675	57	109	110
	293/530 M	3	9	530	648	800	772	76	160	270
560	**292/560 M**	2	9	560	644	750	732	61	115	140
	293/560 M	3	9	560	690	850	822	85	175	355

- warehouse - order - phone



Basic load ratings [kN]		Limiting speed [rpm]		Basic makes*		Bearing No.
dyn. C	stat. C_0	grease	oil	-	EC	
2990	10200	560	750	●	◴	**29448 M**
838	3720	-	1100	◴	◴	**29252 M**
2220	8300	600	800	◴	◴	**29352 M**
3510	12900	500	670	●	◴	**29452 M**
862	4020	-	1000	◴	◴	**29256 M**
4310	15300	480	630	●	◴	**29456 M**
1070	4890	-	900	◴	◴	**29260 M**
2670	10600	530	700	◴	◴	**29360 M**
1110	5170	-	850	◝	◝	**29264 M**
2880	11200	500	670	◴	◴	**29364 M**
4950	19000	430	560	●	◴	**29464 M**
1150	5300	-	850	◝	◝	**29268 M**
2710	11000	480	600	◝	◝	**29368 M**
5750	22400	390	530	◴	◴	**29468 M**
1460	6450	-	750	◝	◝	**29272 M**
2760	11600	470	620	◝	◝	**29372 M**
5350	21200	360	500	◴	◴	**29472 M**
1580	7430	-	700	◝	◝	**29276 M**
3340	14000	450	530	◝	◝	**29376 M**
5870	24000	340	480	◴	◴	**29476 M**
1610	7850	-	700	◝	◝	**29280 M**
3450	14600	440	510	◝	◝	**29380 M**
1990	9620	-	630	◝	◝	**29284 M**
3740	16000	420	500	◝	◝	**29384 M**
2060	9830	-	630	◝	◝	**29288 M**
4490	19300	400	480	◝	◝	**29388 M**
7820	32000	320	420	◝	◝	**29488 M**
2150	10200	-	600	◝	◝	**29292 M**
4310	19000	380	460	◝	◝	**29392 M**
7990	33500	300	390	◝	◝	**29492 M**
2350	11600	-	560	◝	◝	**29296 M**
4370	19600	350	450	◝	◝	**29396 M**
9550	39000	280	350	◝	◝	**29496 M**
2460	14800	-	560	◝	◝	**292/500 M**
4510	19700	330	430	◝	◝	**293/500 M**
8000	32300	260	340	◝	◝	**294/500 M**
3100	16300	-	520	◝	◝	**292/530 M**
5230	23600	300	400	◝	◝	**293/530 M**
2990	16000	-	480	◝	◝	**292/560 M**
5980	29100	280	370	◝	◝	**293/560 M**

* Other products also available

https://nppnovoteh.com

12. SPHERICAL ROLLER THRUST BEARINGS

12.1.Spherical roller thrust bearings



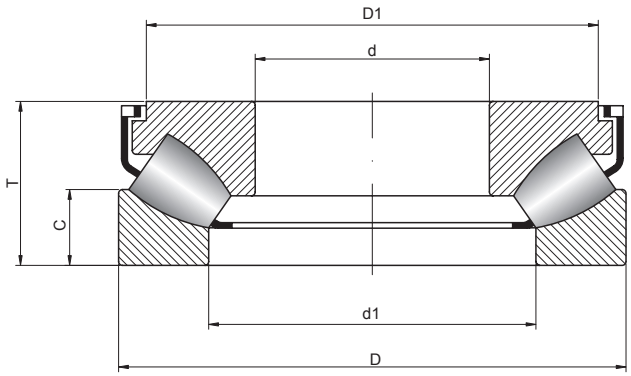

292.. 293.. 294..

600 – 1060 mm

Shaft [mm]	Bearing No.	Series		Dimensions [mm]						Weight [kg]
		SD	ST	d	d1	D	D1	C	T	
600	**292/600 M**	2	9	600	688	800	760	60	122	170
	293/600 M	3	9	600	731	900	870	87	180	405
	294/600 M	4	9	600	769	1030	940	128	258	900
630	**292/630 M**	2	9	630	723	850	810	62	132	210
	293/630 M	3	9	630	761	950	880	92	190	485
	294/630 M	4	9	630	815	1090	995	137	280	1100
670	**294/670 M**	4	9	670	864	1150	1045	141	290	1260
710	**292/710 M**	2	9	710	925	950	930	75	145	290
	294/710 M	4	9	710	917	1220	1110	149	308	1500
800	**294/800 M**	4	9	800	1034	1360	1250	165	335	2025
1060	**292/1060 M**	2	9	1060	1211	1400	1325	100	206	860

- warehouse - order - phone



Basic load ratings [kN]		Limiting speed [rpm]		Basic makes*		Bearing No.
dyn. C	stat. C_0	grease	oil	-	EC	
3680	18600	-	450	✓	✓	**292/600 M**
7100	35100	250	350	✓	✓	**293/600 M**
13100	56000	240	280	✓	✓	**294/600 M**
4770	23600	-	400	✓	✓	**292/630 M**
8450	38000	230	320	✓	✓	**293/630 M**
14400	62000	220	260	✓	✓	**294/630 M**
15400	68000	200	240	✓	✓	**294/670 M**
5300	27600	-	380	✓	✓	**292/710 M**
17600	76500	180	220	✓	✓	**294/710 M**
20200	93000	160	190	✓	✓	**294/800 M**
10500	58500	-	220	✓	✓	**292/1060 M**

* Other products also available

https://nppnovoteh.com

13. GUIDE ROLLERS



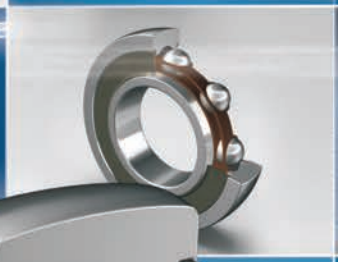





https://nppnovoteh.com

TABLES:

13. GUIDE ROLLERS
13.1. Guide rollers with a hole
13.2. Guide rollers with a mandrel
13.3. Rolling rollers with a hole
13.4. Rolling rollers with a mandrel

INTRODUCTION:

13. Guide rollers, support rollers

13.1. Guide rollers

13.1.1. Dimension series:

- **RBL..(...) -** single-row and double-row with spherical or flat surface of the outer ring, sealed with steel shields or rubber seals **(…) – ..ZZ, ..F2RS, ..FZZ**
- **RBT..F2RS -** double-row, with spherical surface of the outer ring, with rubber seals and with threaded mandrel in spite of the bore in the inner ring

13.1.2. Designations

- **F**- outer spherical surface of ring
- **R**- inner ring extended on both sides

13.1.3. Basic features

The construction of guide rollers is based on deep-groove ball bearings of 60- and 62-series (single-row, narrow) or on 30-, 32- and 33-series angular-contact ball bearings (wide, double-row). Rollers are equipped with plastic seals or steel protective plates. Makes with flat track surface as well as makes with spherical track surface are available. Guide rollers are deceptively similar in their design to ball bearings or self-aligning bearings, but their outer ring, owing to its solid structure, can constitute the outer interacting track. Guide rollers with a mandrel are in fact ready-to-mount inseparable support rollers, which in spite of an inner ring are equipped with a solid mandrel. It has a thread, so the rollers can be quickly and easily mounted on interacting machine elements.

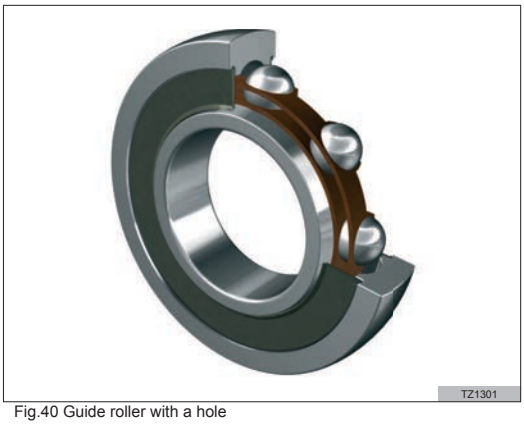

Fig.40 Guide roller with a hole

13.2. Needle and cylindrical support rollers and support rollers of push rods with threaded mandrel

13.2.1. Dimension series

Support rollers:

- **STO.. NA22..2RS** – without axial guiding and with inner ring
- **NA40..V RNA40..V** – without axial guiding and with or without (R) inner ring
- **RSTO.. RNA22..2RS** – without axial guiding and without inner ring
- **NATR..** – with axial guiding, with guiding side-rings
- **NATV..** – with axial guiding, with the full complement of rolling elements
- **NUTR.. – NATV** equivalent, in which needles have been replaced with roller.

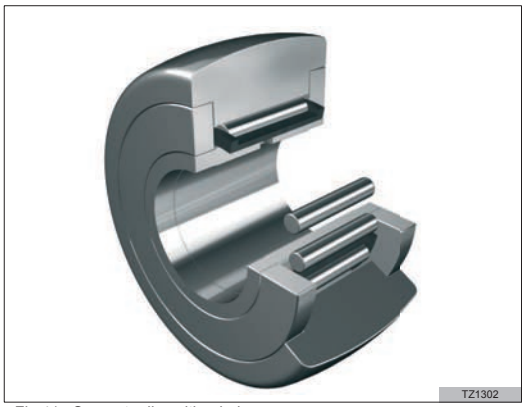

Fig.41a Support roller with a hole

Support rollers of push rods with a mandrel:

- **KR..** – with inner threaded mandrel
- **KRV.. – KR** equivalent with the full complement of rolling elements
- **NUKR..** – with inner threaded mandrel, construction based on the NUTR roller

13.2.2. Basic features

Support rollers are in fact needle or cylindrical roller bearings with modified construction, with thick-walled outer ring. Exactly this structure allows them to carry higher radial loads than it is in the case of guide rollers constructed on the base of ball bearings. Decisively higher load carrying

https://nppnovoteh.com

capacity is obtained at cost of worse rotational performance. Rollers of push rods are ready-to-mount inseparable support rollers, which possess a solid mandrel in spite of an inner ring.

It has a thread, so the push rod rollers can be quickly and easily mounted on interacting machine elements.

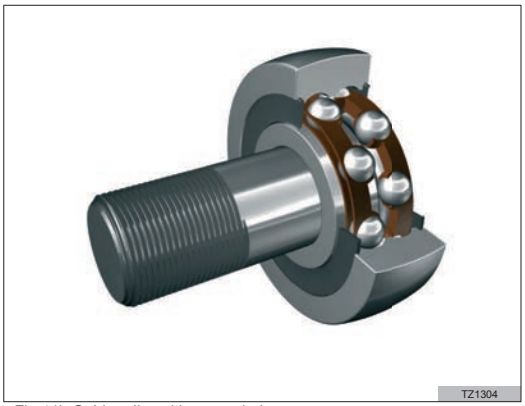

Fig.41b Guide roller with a mandrel



Fig.42 Support roller with a mandrel

https://nppnovoteh.com

https://nppnovoteh.com

13. GUIDE ROLLERS

13.1. Guide rollers with a hole



4 – 20 mm

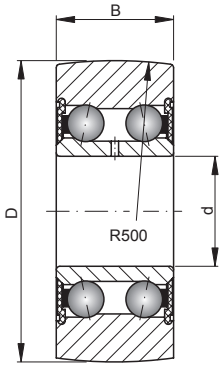

RBL50.. F2RS
RBL52.. F2RS
RBL53.. F2RS

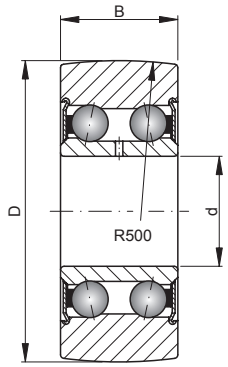

RBL50.. FZZ
RBL52.. FZZ
RBL53.. FZZ

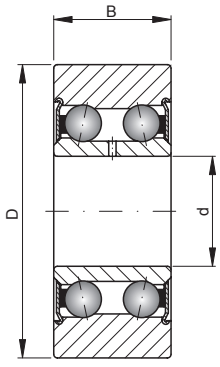

RBL50.. ZZ
RBL52.. ZZ
RBL53.. ZZ

Shaft [mm]	Roller No.	Dimensions [mm]				Weight [kg]	Basic load ratings [kN]	
		d	D	B	B1		dyn. C	stat. C_0
4	**RBL 604 FZZ**	4	13	4	-	0,01	0,86	0,35
5	**RBL 605 FZZ**	5	16	5	-	0,01	1,19	0,49
	RBL 50/5 F2RS	5	17	7	-	0,01	1,65	0,95
6	**RBL 606 FZZ**	6	19	6	-	0,01	1,74	0,7
	RBL 50/6 F2RS	6	19	9	-	0,02	2,65	1,31
7	**RBL 607 FZZ**	7	22	6	-	0,01	2,13	0,87
	RBL 50/7 F2RS	7	22	10	-	0,02	3,3	1,69
8	**RBL 608 FZZ**	8	24	7	-	0,02	2,75	1,25
	RBL 50/8 F2RS	8	24	11	-	0,03	4,2	2,36
10	**RBL 6000 FZZ**	10	28	8	-	0,02	3,65	1,7
	RBL 5000 F2RS	10	28	12	-	0,03	4,75	2,85
	RBL 200 FZZ	10	32	9	-	0,05	4,35	2,13
	RBL 200 ZZ	10	32	9	-	0,05	4,35	2,13
	RBL 5200 F2RS	10	32	14	-	0,07	6,8	4,05
	RBL 5200 FZZ	10	32	14	-	0,07	6,8	4,05
	RBL 5200 ZZ	10	32	14	-	0,07	6,8	4,05
12	**RBL 6001 FZZ**	12	30	8	-	0,03	4,3	2,1
	RBL 5001 F2RS	12	30	12	-	0,03	4,95	3,1
	RBL 201 FRZZ	12	35	10	15	0,07	5,5	2,7
	RBL 201 FZZ	12	35	10	-	0,05	5,6	2,7
	RBL 201 ZZ	12	35	10	-	0,05	5,6	2,7
	RBL 5201 F2RS	12	35	15,9	-	0,08	8,6	5,1
	RBL 5201 FZZ	12	35	15,9	-	0,08	8,6	5,1
	RBL 5201 ZZ	12	35	15,9	-	0,08	8,6	5,1
	RBL 5301 F2RS	12	42	19	-	0,12	11,3	7,1
15	**RBL 6002 FZZ**	15	35	9	-	0,05	4,5	2,3
	RBL 5002 F2RS	15	35	13	-	0,05	6,5	4,1
	RBL 202 FRZZ	15	40	11	14,4	0,08	6,5	3,3
	RBL 202 FZZ	15	40	11	-	0,07	6,5	3,3
	RBL 202 ZZ	15	40	11	-	0,07	6,5	3,3
	RBL 5202 F2RS	15	40	15,9	-	0,11	9,8	6,2
	RBL 5202 FZZ	15	40	15,9	-	0,11	9,8	6,2
	RBL 5202 ZZ	15	40	15,9	-	0,11	9,8	6,2
	RBL 5302 F2RS	15	47	19	-	0,15	14,6	9,2
17	**RBL 6003 FZZ**	17	40	10	-	0,07	5,4	2,99
	RBL 5003 F2RS	17	40	14	-	0,07	7,7	5,2
	RBL 203 FZZ	17	47	12	-	0,11	8,4	4,4
	RBL 203 ZZ	17	47	12	-	0,11	8,4	4,4
	RBL 5203 F2RS	17	47	17,5	-	0,17	12,6	8,2
	RBL 5203 FZZ	17	47	17,5	-	0,17	12,6	8,2
	RBL 5203 ZZ	17	47	17,5	-	0,17	12,6	8,2
	RBL 5303 F2RS	17	52	22,2	-	0,21	17,2	11,1
20	**RBL 6004 FZZ**	20	47	12	-	0,11	6,7	3,57
	RBL 5004 F2RS	20	47	16	-	0,12	11,5	7,7
	RBL 204 FZZ	20	52	14	-	0,15	10,5	5,6
	RBL 204 ZZ	20	52	14	-	0,15	10,5	5,6
	RBL 5204 F2RS	20	52	20,6	-	0,23	15,8	10,5

- warehouse - order - phone

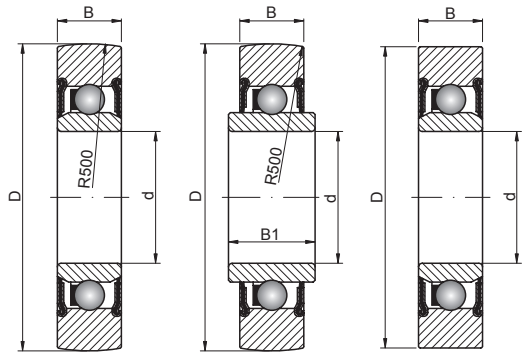

RBL6.. FZZ
RBL2.. FZZ

RBL2.. FRZZ

RBL2.. ZZ

Rotational speed [rpm] reference	Basic makes*	Equivalent	Roller No.
	-		
24000		LR 604 NPPU	**RBL 604 FZZ**
23000		LR 605 NPPU	**RBL 605 FZZ**
12000		LR 50/5 KDDU	**RBL 50/5 F2RS**
22000		LR 606 NPPU	**RBL 606 FZZ**
11000		LR 50/6 KDDU	**RBL 50/6 F2RS**
20000		LR 607 NPPU	**RBL 607 FZZ**
10000		LR 50/7 KDDU	**RBL 50/7 F2RS**
19000		LR 608 NPPU	**RBL 608 FZZ**
10000		LR 50/8 KDDU	**RBL 50/8 F2RS**
17000		LR 6000 NPPU	**RBL 6000 FZZ**
9000		LR 5000 KDDU	**RBL 5000 F2RS**
13000		LR 200 NPPU	**RBL 200 FZZ**
13000		LR 200 NPP	**RBL 200 ZZ**
8000		LR 5200 KDDU	**RBL 5200 F2RS**
11000		LR 5200 NPPU	**RBL 5200 FZZ**
11000		LR 5200 KDD	**RBL 5200 ZZ**
16000		LR 6001 NPPU	**RBL 6001 FZZ**
8500		LR 5001 KDDU	**RBL 5001 F2RS**
9000		LR 201 RRU	**RBL 201 FRZZ**
12000		LR 201 NPPU	**RBL 201 FZZ**
12000		LR 201 NPP	**RBL 201 ZZ**
7500		LR 5201 KDDU	**RBL 5201 F2RS**
10000		LR 5201 NPPU	**RBL 5201 FZZ**
10000		LR 5201 KDD	**RBL 5201 ZZ**
5000		LR 5301 KDDU	**RBL 5301 F2RS**
13000		LR 6002 NPPU	**RBL 6002 FZZ**
7000		LR 5002 KDDU	**RBL 5002 F2RS**
8500		LR 202 RRU	**RBL 202 FRZZ**
11000		LR 202 NPPU	**RBL 202 FZZ**
11000		LR 202 NPP	**RBL 202 ZZ**
7000		LR 5202 KDDU	**RBL 5202 F2RS**
10000		LR 5202 NPPU	**RBL 5202 FZZ**
10000		LR 5202 KDD	**RBL 5202 ZZ**
5000		LR 5302 KDDU	**RBL 5302 F2RS**
11000		LR 6003 NPPU	**RBL 6003 FZZ**
6000		LR 5003 KDDU	**RBL 5003 F2RS**
9000		LR 203 NPPU	**RBL 203 FZZ**
9000		LR 203 NPP	**RBL 203 ZZ**
5500		LR 5203 KDDU	**RBL 5203 F2RS**
7500		LR 5203 NPPU	**RBL 5203 FZZ**
7500		LR 5203 KDD	**RBL 5203 ZZ**
4700		LR 5303 KDDU	**RBL 5303 F2RS**
10000		LR 6004 NPPU	**RBL 6004 FZZ**
5500		LR 5004 KDDU	**RBL 5004 F2RS**
8000		LR 204 NPPU	**RBL 204 FZZ**
8000		LR 204 NPP	**RBL 204 ZZ**
5000		LR 5204 KDDU	**RBL 5204 F2RS**

* Other products also available

13. GUIDE ROLLERS

13.1. Guide rollers with a hole



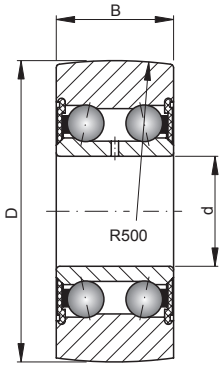

RBL50.. F2RS
RBL52.. F2RS
RBL53.. F2RS

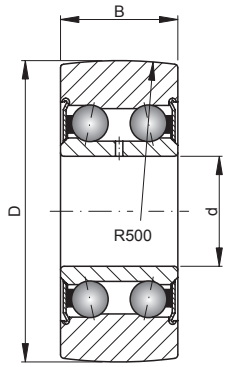

RBL50.. FZZ
RBL52.. FZZ
RBL53.. FZZ

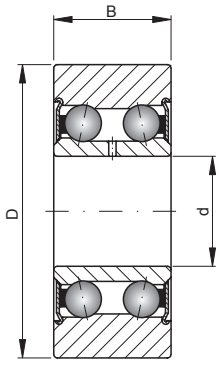

RBL50.. ZZ
RBL52.. ZZ
RBL53.. ZZ

20 – 45 mm

Shaft [mm]	Roller No.	Dimensions [mm]				Weight [kg]	Basic load ratings [kN]	
		d	D	B	B1		dyn. C	stat. C_0
20 cont.	**RBL 5204 FZZ**	20	52	20,6	-	0,23	15,8	10,5
	RBL 5204 ZZ	20	52	20,6	-	0,23	15,8	10,5
	RBL 5304 F2RS	20	62	22,2	-	0,34	21,1	14,5
	RBL 5304 FZZ	20	62	22,2	-	0,34	21,1	14,5
	RBL 5304 ZZ	20	62	22,2	-	0,34	21,1	14,5
25	**RBL 5005 F2RS**	25	52	16	-	0,15	11,6	8,1
	RBL 205 FZZ	25	62	15	-	0,23	12,5	7,1
	RBL 205 ZZ	25	62	15	-	0,23	12,5	7,1
	RBL 5205 F2RS	25	62	20,6	-	0,34	18,5	13
	RBL 5205 FZZ	25	62	20,6	-	0,34	18,5	13
	RBL 5205 ZZ	25	62	20,6	-	0,34	18,5	13
	RBL 5305 F2RS	25	72	25,4	-	0,5	27,5	19,5
	RBL 5305 FZZ	25	72	25,4	-	0,5	27,5	19,5
	RBL 5305 ZZ	25	72	25,4	-	0,5	27,5	19,5
30	**RBL 5006 F2RS**	30	62	19	-	0,25	15,8	11,8
	RBL 206 FZZ	30	72	16	-	0,33	16,6	9,6
	RBL 206 ZZ	30	72	16	-	0,33	16,6	9,6
	RBL 5206 F2RS	30	72	23,8	-	0,51	24,6	21,4
	RBL 5206 ZZ	30	72	23,8	-	0,51	24,6	21,4
	RBL 5206 FZZ	30	75	23,8	-	0,51	24,6	21,4
	RBL 5306 F2RS	30	80	30,2	-	0,67	36,5	26,5
	RBL 5306 FZZ	30	80	30,2	-	0,67	36,5	26,5
	RBL 5306 ZZ	30	80	30,2	-	0,67	36,5	26,5
35	**RBL 5007 F2RS**	35	68	20	-	0,3	17,6	13,1
	RBL 207 FZZ	35	80	17	-	0,4	20,2	11,9
	RBL 207 ZZ	35	80	17	-	0,4	20,2	11,9
	RBL 5207 F2RS	35	80	27	-	0,66	30,5	22,4
	RBL 5207 FZZ	35	80	27	-	0,66	30,5	22,4
	RBL 5207 ZZ	35	80	27	-	0,66	30,5	22,4
	RBL 5307 F2RS	35	90	34,9	-	0,97	44,5	33
	RBL 5307 FZZ	35	90	34,9	-	0,97	44,5	33
	RBL 5307 ZZ	35	90	34,9	-	0,97	44,5	33
40	**RBL 5008 F2RS**	40	75	21	-	0,37	18,4	14,6
	RBL 208 FZZ	40	85	18	-	0,45	22,8	13,6
	RBL 208 ZZ	40	85	18	-	0,45	22,8	13,6
	RBL 5208 F2RS	40	85	30,2	-	0,75	34,5	25,5
	RBL 5208 FZZ	40	85	30,2	-	0,75	34,5	25,5
	RBL 5208 ZZ	40	85	30,2	-	0,75	34,5	25,5
	RBL 5308 F2RS	40	100	36,5	-	1,2	56	42
	RBL 5308 FZZ	40	100	36,5	-	1,2	56	42
	RBL 5308 ZZ	40	100	36,5	-	1,2	56	42
45	**RBL 209 FZZ**	45	90	19	-	0,5	22,5	13,7
	RBL 209 ZZ	45	90	19	-	0,5	22,5	13,7

- warehouse - order - phone

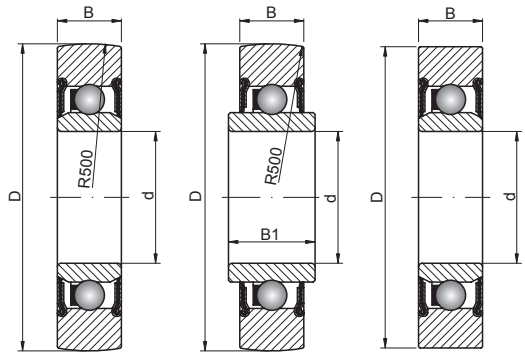

RBL6.. FZZ
RBL2.. FZZ

RBL2.. FRZZ

RBL2.. ZZ

Rotational speed [rpm] reference	Basic makes* -	Equivalent	Roller No.
7000		LR 5204 NPPU	**RBL 5204 FZZ**
7000		LR 5204 KDD	**RBL 5204 ZZ**
4500		LR 5304 KDDU	**RBL 5304 F2RS**
6500		LR 5304 NPPU	**RBL 5304 FZZ**
6500		LR 5304 KDD	**RBL 5304 ZZ**
4700		LR 5005 KDDU	**RBL 5005 F2RS**
7000		LR 205 NPPU	**RBL 205 FZZ**
7000		LR 205 NPP	**RBL 205 ZZ**
4500		LR 5205 KDDU	**RBL 5205 F2RS**
6500		LR 5205 NPPU	**RBL 5205 FZZ**
6500		LR 5205 KDD	**RBL 5205 ZZ**
3900		LR 5305 KDDU	**RBL 5305 F2RS**
5500		LR 5305 NPPU	**RBL 5305 FZZ**
5500		LR 5305 KDD	**RBL 5305 ZZ**
4000		LR 5006 KDDU	**RBL 5006 F2RS**
5500		LR 206 NPPU	**RBL 206 FZZ**
5500		LR 206 NPP	**RBL 206 ZZ**
3500		LR 5206 KDDU	**RBL 5206 F2RS**
5000		LR 5206 KDD	**RBL 5206 ZZ**
5000		LR 5206 NPPU	**RBL 5206 FZZ**
3100		LR 5306 KDDU	**RBL 5306 F2RS**
4300		LR 5306 NPPU	**RBL 5306 FZZ**
4300		LR 5306 KDD	**RBL 5306 ZZ**
4300		LR 5007 KDDU	**RBL 5007 F2RS**
4500		LR 207 NPPU	**RBL 207 FZZ**
4500		LR 207 NPP	**RBL 207 ZZ**
2800		LR 5207 KDDU	**RBL 5207 F2RS**
3900		LR 5207 NPPU	**RBL 5207 FZZ**
3900		LR 5207 KDD	**RBL 5207 ZZ**
2500		LR 5307 KDDU	**RBL 5307 F2RS**
3600		LR 5307 NPPU	**RBL 5307 FZZ**
3600		LR 5307 KDD	**RBL 5307 ZZ**
3100		LR 5008 KDDU	**RBL 5008 F2RS**
4000		LR 208 NPPU	**RBL 208 FZZ**
4000		LR 208 NPP	**RBL 208 ZZ**
2500		LR 5208 KDDU	**RBL 5208 F2RS**
3500		LR 5208 NPPU	**RBL 5208 FZZ**
3500		LR 5208 KDD	**RBL 5208 ZZ**
2300		LR 5308 KDDU	**RBL 5308 F2RS**
3300		LR 5308 NPPU	**RBL 5308 FZZ**
3300		LR 5308 KDD	**RBL 5308 ZZ**
3600		LR 209 NPPU	**RBL 209 FZZ**
3600		LR 209 NPP	**RBL 209 ZZ**

* Other products also available

https://nppnovoteh.com

13. GUIDE ROLLERS

13.2. Guide rollers with a mandrel



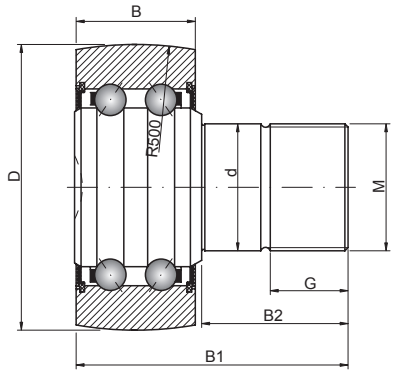

RBT 52..

Roller No.	Dimensions [mm]							Weight [kg]
	D	d	B	B1	B2	M	G	
RBT5201 F2RS	35	12	15,9	49,2	32,5	M12X1,5	17	0,12
RBT5202 F2RS	40	16	15,9	53,2	36,5	M16X1,5	19	0,19
RBT5203 F2RS	47	18	17,5	58,8	40,5	M18X1,5	21	0,29
RBT5204 F2RS	52	20	20,6	63,5	41,5	M20X1,5	21	0,38
RBT5205 F2RS	62	24	20,6	70,9	49,5	M24X1,5	25	0,58
RBT5206 F2RS	72	24	23,8	74,1	49,5	M24X1,5	25	0,8
RBT5207 F2RS	80	30	27	91	63	M30X1,5	32	1,2

- warehouse - order - phone



Basic load ratings [kN]		Rotational speed [rpm] reference	Basic makes*	Equivalent	Roller No.
dyn. C	stat. C_0		-		
8,6	5,1	7500		KR5201 NPPU	**RBT5201 F2RS**
9,8	6,2	7000		KR5202 NPPU	**RBT5202 F2RS**
12,6	8,2	5500		KR5203 NPPU	**RBT5203 F2RS**
15,8	10,5	5000		KR5204 NPPU	**RBT5204 F2RS**
18,5	13	4500		KR5205 NPPU	**RBT5205 F2RS**
24,6	17,7	3500		KR5206 NPPU	**RBT5206 F2RS**
30,5	22,4	2800		KR5207 NPPU	**RBT5207 F2RS**

* Other products also available

https://nppnovoteh.com

13. GUIDE ROLLERS

13.3. Rolling rollers with a hole



5 – 20 mm

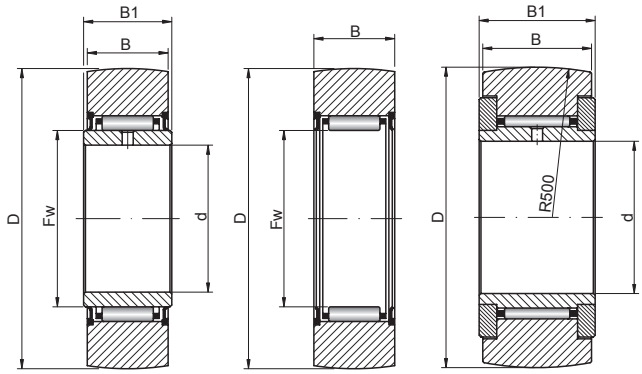

NA22 .. 2RS RNA22 .. 2RS NATR..

Shaft [mm]	Roller No.	Dimensions [mm]						Weight [kg]
		d	D	B	B1	Fw	Fz	
5	**NATR 05**	5	16	11	12	-	-	0,014
	NATV 05	5	16	11	12	-	-	0,015
6	**STO 06**	6	19	9,8	10	10	13	0,017
	NATR 06	6	19	11	12	-	-	0,02
	NATV 06	6	19	11	12	-	-	0,021
	NA22/6 2RS	6	19	11,8	12	10	-	0,022
7	**RSTO 05**	7	16	7,8	-	7	10	0,0085
8	**STO 08**	8	24	9,8	10	12	15	0,026
	NA22/8 2RS	8	24	11,8	12	12	-	0,034
	NATR 08	8	24	14	15	-	-	0,041
	NATV 08	8	24	14	15	-	-	0,042
10	**RSTO 06**	10	19	9,8	-	10	13	0,0125
	RNA22/6 2RS	10	19	11,8	-	10	-	0,018
	STO 10	10	30	11,8	12	14	20	0,049
	NA2200 2RS	10	30	13,8	14	14	-	0,06
	NATR 10	10	30	14	15	-	-	0,064
	NATV 10	10	30	14	15	-	-	0,065
12	**RSTO 08**	12	24	9,8	-	12	15	0,021
	RNA22/8 2RS	12	24	11,8	-	12	-	0,029
	STO 12	12	32	11,8	12	16	22	0,057
	NA2201 2RS	12	32	13,8	14	16	-	0,067
	NATR 12	12	32	14	15	-	-	0,071
	NATV 12	12	32	14	15	-	-	0,072
14	**RSTO 10**	14	30	11,8	-	14	20	0,042
	RNA2200 2RS	14	30	13,8	-	14	-	0,052
15	**STO 15**	15	35	11,8	12	20	26	0,063
	NA2202 2RS	15	35	13,8	14	20	-	0,075
	NATR 15	15	35	18	19	-	-	0,103
	NATV 15	15	35	18	19	-	-	0,105
	NUTR 15	15	35	18	19	-	-	0,099
	NUTR 15/42	15	42	18	19	-	-	0,158
16	**RSTO 12**	16	32	11,8	-	16	22	0,049
	RNA2201 2RS	16	32	13,8	-	16	-	0,057
17	**NA2203 2RS**	17	40	15,8	16	22	-	0,112
	STO 17	17	40	15,8	16	22	29	0,107
	NATR 17	17	40	20	21	-	-	0,144
	NATV 17	17	40	20	21	-	-	0,152
	NUTR 17	17	40	20	21	-	-	0,147
	NUTR 17/47	17	47	20	21	-	-	0,22
20	**RSTO 15**	20	35	11,8	-	20	26	0,05
	RNA2202 2RS	20	35	13,8	-	20	-	0,06
	NA4004 V	20	42	22	-	28	-	0,1760
	STO 20	20	47	15,8	16	25	32	0,152
	NA2204 2RS	20	47	17,8	18	25	-	0,177
	NATR 20	20	47	24	25	-	-	0,246
	NATV 20	20	47	24	25	-	-	0,254

- warehouse - order - phone

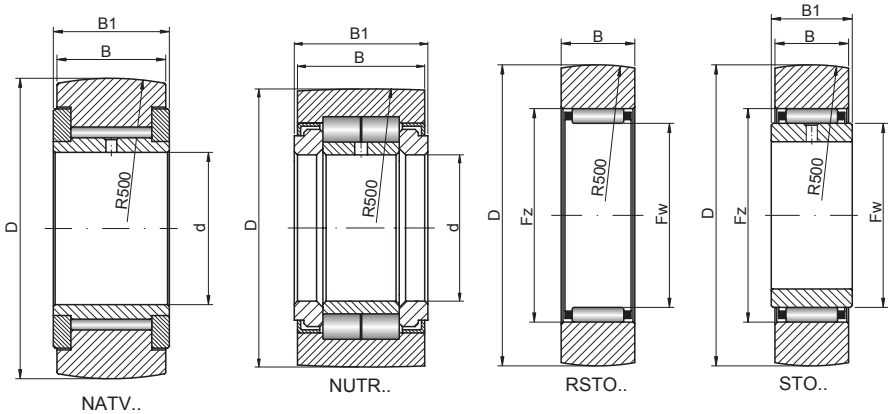

NATV.. NUTR.. RSTO.. STO..

Basic load ratings [kN]		Rotational speed [rpm] reference	Basic makes*	Roller No.
dyn. C	stat. C_0		-	
3,15	3,3	14000		**NATR 05**
4,85	6,5	3800		**NATV 05**
3,75	4,5	10000		**STO 06**
3,5	3,9	11000		**NATR 06**
5,5	7,9	3100		**NATV 06**
3,9	3,65	9000		**NA22/6 2RS**
2,55	2,55	16000		**RSTO 05**
4,2	5,5	8000		**STO 08**
4,8	4,8	7000		**NA22/8 2RS**
5,5	6,4	7500		**NATR 08**
7,8	11,4	2500		**NATV 08**
3,75	4,5	10000		**RSTO 06**
3,9	3,65	9000		**RNA22/6 2RS**
8,4	9,2	5500		**STO 10**
7	8	5500		**NA2200 2RS**
6,8	8,4	5500		**NATR 10**
9,5	14,6	2100		**NATV 10**
4,2	5,5	8000		**RSTO 08**
4,8	4,8	7000		**RNA22/8 2RS**
8,9	10,1	4500		**STO 12**
7,5	9	4700		**NA2201 2RS**
6,9	8,8	4500		**NATR 12**
9,7	15,4	1800		**NATV 12**
8,4	9,2	5500		**RSTO 10**
7	8	5500		**RNA2200 2RS**
9,1	10,7	3300		**STO 15**
7,6	9,5	3400		**NA2202 2RS**
9,7	14,1	3600		**NATR 15**
12,8	23	1600		**NATV 15**
15	16,8	6500		**NUTR 15**
18,1	21,9	6500		**NUTR 15/42**
8,9	10,1	4500		**RSTO 12**
7,5	9	4700		**RNA2201 2RS**
9,9	13,7	3000		**NA2203 2RS**
14,3	17,7	2800		**STO 17**
10,9	15,5	2900		**NATR 17**
14,8	26,5	1400		**NATV 17**
18,4	22,6	5500		**NUTR 17**
21,3	28	5500		**NUTR 17/47**
9,1	10,7	3300		**RSTO 15**
7,6	9,5	3400		**RNA2202 2RS**
30,4	55,2	6600		**NA4004 V**
16,2	21,5	2400		**STO 20**
15,2	18,3	2300		**NA2204 2RS**
15,5	25,5	2400		**NATR 20**
20,6	42	1300		**NATV 20**

* Other products also available

https://nppnovoteh.com

13. GUIDE ROLLERS

13.3. Rolling rollers with a hole



20 – 45 mm

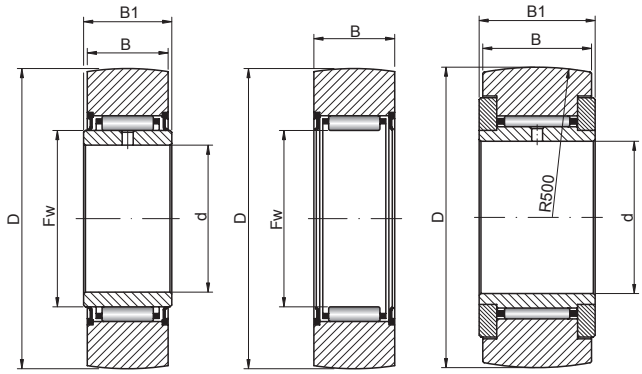

Shaft [mm]	Roller No.	Dimensions [mm]						Weight [kg]
		d	D	B	B1	Fw	Fz	
20 cont.	**NUTR 20**	20	47	24	25	-	-	0,245
	NUTR 20/52	20	52	24	25	-	-	0,321
22	**RNA2203 2RS**	22	40	15,8	-	22	-	0,094
	RSTO 17	22	40	15,8	-	22	29	0,088
25	**RSTO 20**	25	47	15,8	-	25	32	0,13
	RNA2204 2RS	25	47	17,8	-	25	-	0,152
	NA4005 V	25	47	22	-	34	-	0,2000
	STO 25	25	52	15,8	16	30	37	0,177
	NA2205 2RS	25	52	17,8	18	30	-	0,209
	NATR 25	25	52	24	25	-	-	0,275
	NATV 25	25	52	24	25	-	-	0,285
	NUTR 25	25	52	24	25	-	-	0,281
	NUTR 25/62	25	62	24	25	-	-	0,45
28	**RNA4004 V**	28	42	22	-	28	-	0,1240
30	**RSTO 25**	30	52	15,8	-	30	37	0,15
	RNA2205 2RS	30	52	17,8	-	30	-	0,179
	NA4006 V	30	55	25	-	40	-	0,3110
	NA2206 2RS	30	62	19,8	20	35	-	0,324
	STO 30	30	62	19,8	20	38	46	0,308
	NATR 30	30	62	28	29	-	-	0,47
	NATV 30	30	62	28	29	-	-	0,481
	NUTR 30	30	62	28	29	-	-	0,465
	NUTR 30/72	30	72	28	29	-	-	0,697
34	**RNA4005 V**	34	47	22	-	34	-	0,1340
35	**RNA2206 2RS**	35	62	19,8	-	35	-	0,284
	NA4007 V	35	62	27	-	46	-	0,4190
	STO 35	35	72	19,8	20	42	50	0,441
	NA2207 2RS	35	72	22,7	23	42	-	0,505
	NATR 35	35	72	28	29	-	-	0,635
	NATV 35	35	72	28	29	-	-	0,647
	NUTR 35	35	72	28	29	-	-	0,63
	NUTR 35/80	35	80	28	29	-	-	0,836
38	**RSTO 30**	38	62	19,8	-	38	46	0,255
40	**RNA4006 V**	40	55	25	-	40	-	0,2020
	NA4008 V	40	68	28	-	52	-	0,4950
	STO 40	40	80	19,8	20	50	58	0,53
	NA2208 2RS	40	80	22,7	23	48	-	0,628
	NATR 40	40	80	30	32	-	-	0,805
	NATV 40	40	80	30	32	-	-	0,89
	NUTR 40	40	80	30	32	-	-	0,816
	NUTR 40/90	40	90	30	32	-	-	1,129
42	**RSTO 35**	42	72	19,8	-	42	50	0,375
	RNA2207 2RS	42	72	22,7	-	42	-	0,432
45	**STO 45**	45	85	19,8	20	55	63	0,576
	NA2209 2RS	45	85	22,7	23	52	-	0,655
	NUTR 45	45	85	30	32	-	-	0,883

- warehouse - order - phone

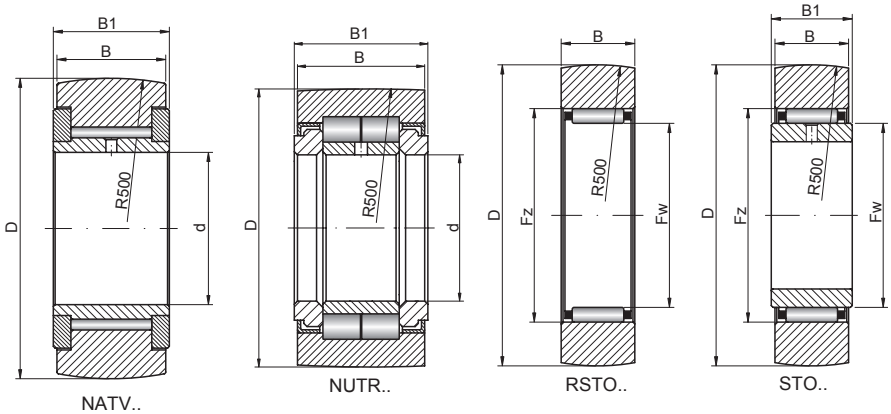

Basic load ratings [kN]		Rotational speed [rpm] reference	Basic makes*	Roller No.
dyn. C	stat. C_0		-	
28	35	4200		**NUTR 20**
31,5	41	4200		**NUTR 20/52**
9,9	13,7	3000		**RNA2203 2RS**
14,3	17,7	2800		**RSTO 17**
16,2	21,5	2400		**RSTO 20**
15,2	18,3	2300		**RNA2204 2RS**
36,2	65,6	5800		**NA4005 V**
16,5	22,9	1800		**STO 25**
15,7	20	1800		**NA2205 2RS**
15,4	26,5	1800		**NATR 25**
20,5	44	1000		**NATV 25**
29	37,5	3400		**NUTR 25**
35,5	50	3400		**NUTR 25/62**
30,4	55,2	6600		**RNA4004 V**
16,5	22,9	1800		**RSTO 25**
15,7	20	1800		**RNA2205 2RS**
44,7	89,1	4700		**NA4006 V**
18,4	25,5	1400		**NA2206 2RS**
23,3	35	1300		**STO 30**
23,6	38,5	1300		**NATR 30**
30,5	62	850		**NATV 30**
40	50	2600		**NUTR 30**
47,5	64	2600		**NUTR 30/72**
36,2	65,6	5800		**RNA4005 V**
18,4	25,5	1400		**RNA2206 2RS**
52,1	114	4150		**NA4007 V**
25,5	40	1100		**STO 35**
23	35,5	1100		**NA2207 2RS**
25,5	44,5	1000		**NATR 35**
33	73	750		**NATV 35**
44,5	60	2100		**NUTR 35**
51	72	2100		**NUTR 35/80**
23,3	35	1300		**RSTO 30**
44,7	89,1	4700		**RNA4006 V**
55,2	128	3700		**NA4008 V**
24	39	850		**STO 40**
27,5	40,5	850		**NA2208 2RS**
33	59	850		**NATR 40**
41	90	650		**NATV 40**
55	75	1600		**NUTR 40**
66	95	1600		**NUTR 40/90**
25,5	40	1100		**RSTO 35**
23	35,5	1100		**RNA2207 2RS**
25,5	43	750		**STO 45**
28,5	43	800		**NA2209 2RS**
56	78	1400		**NUTR 45**

* Other products also available

https://nppnovoteh.com

13. GUIDE ROLLERS

13.3. Rolling rollers with a hole



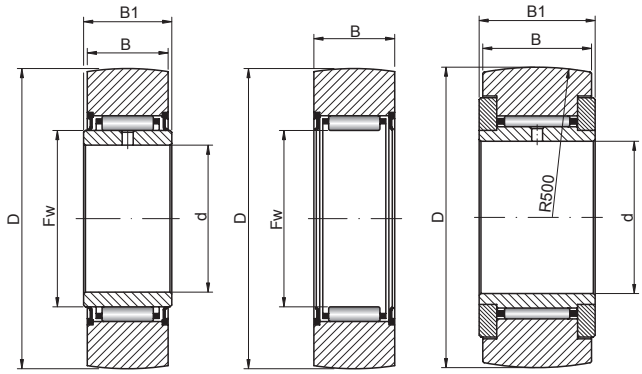

NA22 .. 2RS RNA22 .. 2RS NATR..

45 – 62 mm

Shaft [mm]	Roller No.	Dimensions [mm]						Weight [kg]
		d	D	B	B1	Fw	Fz	
45 cont.	**NUTR 45/100**	45	100	30	32	-	-	1,396
46	**RNA4007 V**	46	62	27	-	46	-	0,2720
48	**RNA2208 2RS**	48	80	22,7	-	48	-	0,53
50	**RSTO 40**	50	80	19,8	-	50	58	0,42
	NA4010 V	50	80	30	-	62	-	0,6870
	STO 50	50	90	19,8	20	60	68	0,617
	NA2210 2RS	50	90	22,7	23	58	-	0,69
	NATV 50	50	90	30	32	-	-	0,99
	NUTR 50	50	90	30	32	-	-	0,95
	NUTR 50/110	50	110	30	32	-	-	1,69
52	**RNA4008 V**	52	68	28	-	52	-	0,3060
	RNA2209 2RS	52	85	22,7	-	52	-	0,545
55	**RSTO 45**	55	85	19,8	-	55	63	0,453
58	**RNA2210 2RS**	58	90	22,7	-	58	-	0,563
60	**RSTO 50**	60	90	19,8	-	60	68	0,481
62	**RNA4010 V**	62	80	30	-	62	-	0,4400

- warehouse - order - phone

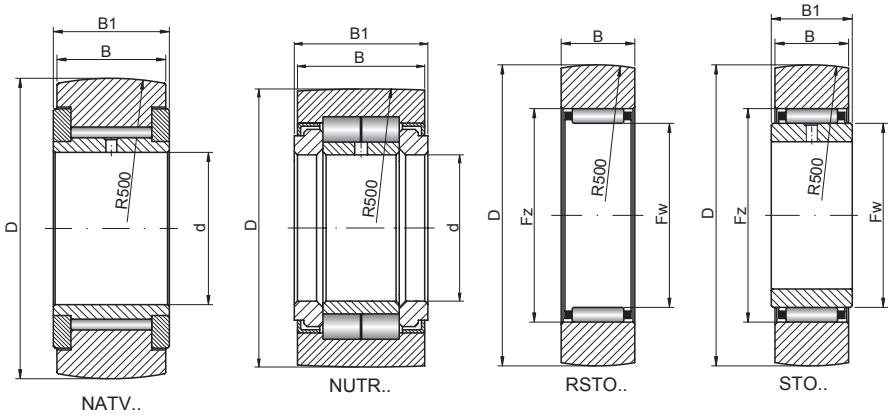

NATV.. NUTR.. RSTO.. STO..

Basic load ratings [kN]		Rotational speed [rpm] reference	Basic makes*	Roller No.
dyn. C	stat. C_0		-	
71	107	1400		**NUTR 45/100**
52,1	114	4150		**RNA4007 V**
27,5	40,5	850		**RNA2208 2RS**
24	39	850		**RSTO 40**
59,6	153	3150		**NA4010 V**
26	46,5	650		**STO 50**
28	42,5	650		**NA2210 2RS**
40,5	93	550		**NATV 50**
57	81	1300		**NUTR 50**
76	120	1300		**NUTR 50/110**
55,2	128	3700		**RNA4008 V**
28,5	43	800		**RNA2209 2RS**
25,5	43	750		**RSTO 45**
28	42,5	650		**RNA2210 2RS**
26	46,5	650		**RSTO 50**
59,6	153	3150		**RNA4010 V**

* Other products also available

13. GUIDE ROLLERS

13.4. Rolling rollers with a mandrel



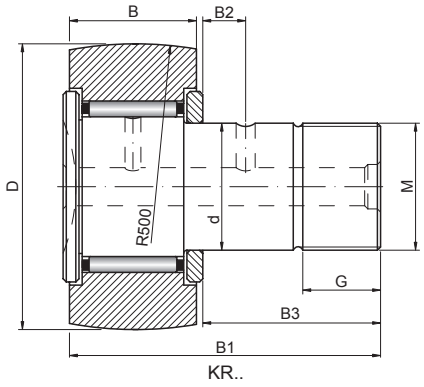

KR..

16 – 90 mm

D [mm]	Roller No.	Dimensions [mm]								
		D	d	B	B1	B3	B2	dm	M	G
16	**KR16**	16	6	11	28	16	-	4	M6X1	8
	KRV16	16	6	11	28	16	-	4	M6X1	8
19	**KR19**	19	8	11	32	20	-	4	M8X1,25	10
	KRV19	19	8	11	32	20	-	4	M8X1,25	10
22	**KR22**	22	10	12	36	23	-	4	M10X1	12
	KRV22	22	10	12	36	23	-	4	M10X1	12
26	**KR26**	26	10	12	36	23	-	4	M10X1	12
	KRV26	26	10	12	36	23	-	4	M10X1	12
30	**KR30**	30	12	14	40	25	-	6	M12X1,5	13
	KRV30	30	12	14	40	25	-	6	M12X1,5	13
32	**KR32**	32	12	14	40	25	6	6	M12X1,5	13
	KRV32	32	12	14	40	25	6	6	M12X1,5	13
35	**NUKR35**	35	16	18	52	32,5	7,8	-	M16x1,5	17
	KR35	35	16	18	52	32,5	8	6	M16X1,5	17
	KRV35	35	16	18	52	32,5	8	6	M16X1,5	17
40	**NUKR40**	40	18	20	58	36,4	8	-	M18x1,5	19
	KR40	40	18	20	58	36,5	8	6	M18X1,5	19
	KRV40	40	18	20	58	36,5	8	6	M18X1,5	19
47	**NUKR47**	47	20	24	66	40,5	9	-	M20X1,5	21
	KR47	47	20	24	66	40,5	9	8	M20X1,5	21
	KRV47	47	20	24	66	40,5	9	8	M20X1,5	21
52	**NUKR52**	52	20	24	66	40,5	9	-	M20X1,5	21
	KR52	52	20	24	66	40,5	9	8	M20X1,5	21
	KRV52	52	20	24	66	40,5	9	8	M20X1,5	21
62	**NUKR62**	62	24	28	80	49,5	11	-	M24X1,5	25
	KR62	62	24	29	80	49,5	11	-	M24X1,5	25
	KRV62	62	24	29	80	49,5	11	-	M24X1,5	25
72	**NUKR72**	72	24	28	80	49,5	11	-	M24X1,5	25
	KR72	72	24	29	80	49,5	11	-	M24X1,5	25
	KRV72	72	24	29	80	49,5	11	-	M24X1,5	25
80	**NUKR80**	80	30	35	100	63	15	-	M30X1,5	32
	KR80	80	30	35	100	63	15	-	M30X1,5	32
	KRV80	80	30	35	100	63	15	-	M30X1,5	32
90	**NUKR90**	90	30	35	100	63	15	-	M30X1,5	32
	KR90	90	30	35	100	63	15	-	M30X1,5	3
	KRV90	90	30	35	100	63	15	-	M30X1,5	3

- warehouse - order - phone

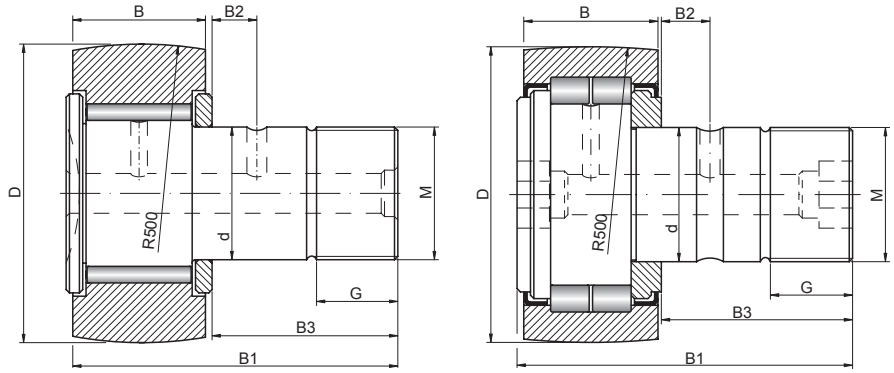

Weight [kg]	Basic load ratings [kN]		Rotational speed [rpm] reference	Basic makes*	Roller No.
	dyn. C	stat. C_0		-	
0,018	3,15	3,3	14000		**KR16**
0,02	4,85	6,5	3800		**KRV16**
0,028	3,5	3,9	11000		**KR19**
0,032	5,5	7,9	3100		**KRV19**
0,044	4,45	5,2	8000		**KR22**
0,045	6,3	9,1	2600		**KRV22**
0,058	5,1	6,2	8000		**KR26**
0,061	7,3	11,3	2600		**KRV26**
0,087	6,8	8,4	5500		**KR30**
0,089	9,5	14,6	2100		**KRV30**
0,098	7,1	9	5500		**KR32**
0,1	10	15,8	2100		**KRV32**
0,164	15	16,8	6500		**NUKR35**
0,169	9,7	14,1	3600		**KR35**
0,171	12,8	23	1600		**KRV35**
0,242	18,4	22,6	5500		**NUKR40**
0,247	10,9	15,5	2900		**KR40**
0,249	14,8	26,5	1400		**KRV40**
0,38	28	35	4200		**NUKR47**
0,386	15,5	25,5	2400		**KR47**
0,39	18,9	36,8	1200		**KRV47**
0,45	29	37,5	3400		**NUKR52**
0,461	16,8	29	2400		**KR52**
0,467	20,3	42,9	1200		**KRV52**
0,795	40	50	2600		**NUKR62**
0,79	26,5	47,5	1900		**KR62**
0,802	34	76	1100		**KRV62**
1,02	44,5	60	2100		**NUKR72**
1,04	28	53	1900		**KR72**
1,045	37	85	1100		**KRV72**
1,6	69	98	1800		**NUKR80**
1,55	39,5	77	1300		**KR80**
1,561	49,5	120	850		**KRV80**
1,96	79	117	1800		**NUKR90**
1,95	41,5	83	1300		**KR90**
1,97	53	130	850		**KRV90**

* Other products also available

https://nppnovoteh.com

14. INSERT BALL BEARINGS



https://nppnovoteh.com

TABLES:

14. INSERT BALL BEARINGS
14.1. Insert ball bearings – type – K6..
14.2. Insert ball bearings – type – SA..
14.3. Insert ball bearings – type – FD..
14.4. Insert ball bearings – type – SB..
14.5. Insert ball bearings – type – UC..
14.6. Insert ball bearings – type – UK..

INTRODUCTION:

14. Single-row radial insert ball bearings

Insert ball bearings are in fact single-row radial deep-groove ball bearings with modified surface of the outer ring. They evolved from single-row radial ball bearings.

They are available in three dimension series:

- **2** – Equivalent of the 62-series ball bearing
- **X** – Intermediate series between equivalents of 62- and 63-series ball bearings
- **3** – Equivalent of the 63-series ball bearing

The most typical feature of insert ball bearings – which also sets them apart from deep-groove ball bearings – is the spherical outside surface of the outer ring. Such design allows to mount these bearings in bearing housings, in which they acquire their specific features. The variety of insert ball bearing types results from differences in their structure, which in turn are caused by different ways of the mounting process.

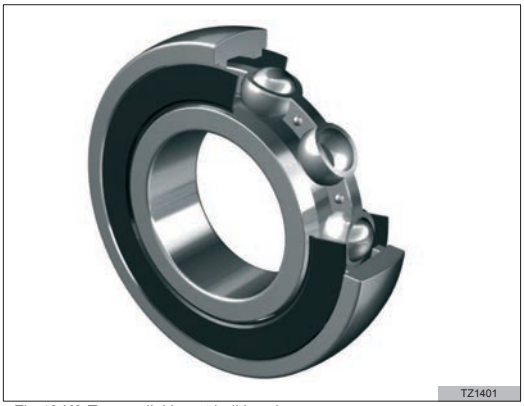

Fig.43 K6-Type radial insert ball bearing

- **K6..** - Deep-groove ball bearing with spherical outer track without modifications of the inner ring.
- **UC..** - insert ball bearing with the inner ring asymmetrically extended on both sides.

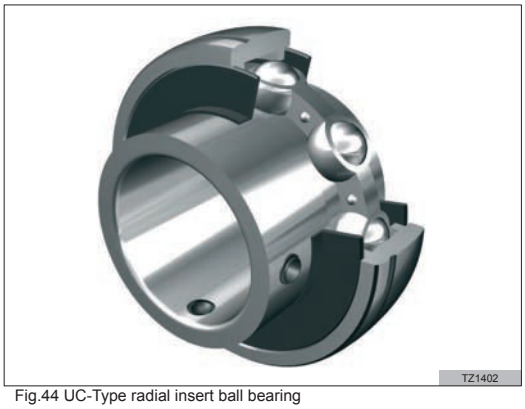

Fig.44 UC-Type radial insert ball bearing

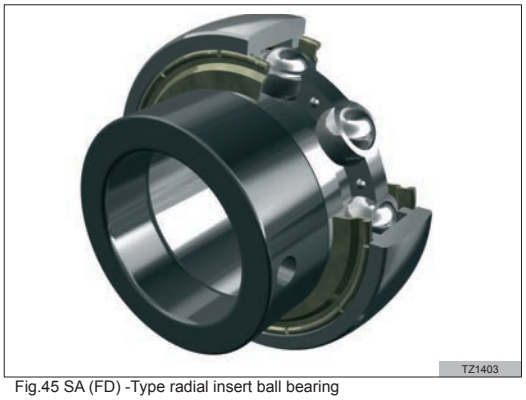

Fig.45 SA (FD) -Type radial insert ball bearing

- **SA..(FD..)** - Self-aligning bearing with the inner ring extended on one side. Off-centre fixing ring is put on the extended part of the ring.
- **SB..** - Self-aligning bearing with the inner ring extended on one side (simplified version of the UC-type bearing.
- **SC..** - Self-aligning bearing with the inner ring extended on both sides. Off-centre fixing ring is put on the extended part of the ring (widened version of the SA-bearing).
- **UK..** - Self-aligning bearing with tapered bore of 1:12 taper to be mounted with H23-series sleeve.

https://nppnovoteh.com

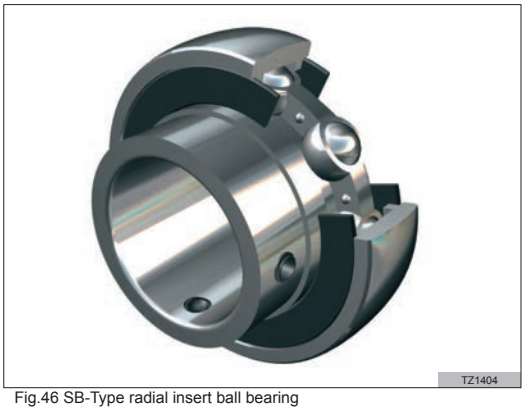

Fig.46 SB-Type radial insert ball bearing

14.1. Seals and lubrication

All self-aligning bearings are manufactured with plastic or metal seals or a combination of both. They are filled with lubricant, which will do for the whole life of the bearing under condition that the bearing is operated under moderate conditions. However, in case of continuous and intensive operation self-aligning bearings require additional lubrication. There is a hole in the inner ring that serves this purpose, sometimes there is a lubricating groove, too, which transports lubricant to the inside of the running bearing. Bearing housings, in which self-aligning bearings are mounted, are equipped with lubricating nipples. It is very important for a lubricating hole of the mounted bearing to be located on the same side as the lubricating nipple's mouth.

14.2. Structure differences

Main dimensions of self-aligning bearings produced by most manufacturers are the same, however the location of the lubricating hole and groove may be different. European standard differs in this regard from the Japanese one. One should not forget, that in case of bearings being operated under hard conditions, additional lubrication may have a key impact on their longevity.

14.3. Features and application

Self-aligning bearings mounted in bearing housings make up the so-called bearing units. After having been seated in the bearing housing, they acquire features of self-aligning bearings. Owing to their features, which comprise above all easiness of mounting and dismounting, own lubricant reserve, effective seal and self-alignment ability, they are applied in agriculture machines, construction machines, conveyors, mining machines, textile machines and many other installations. Cast-iron and tin bearing housings are designed for self-aligning bearings.

https://nppnovoteh.com

https://nppnovoteh.com

14. INSERT BALL BEARINGS

14.1. Insert ball bearings – type – K6..



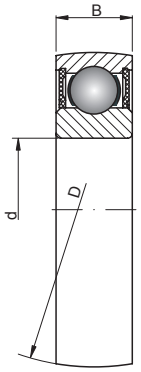

K62..

10 – 50 mm

Shaft [mm]	Bearing No.	Dimensions [mm]			Weight [kg]	Basic load ratings [kN]	
		d	D	B		dyn. C	stat. C_0
10	**K6200 2RS**	10	30	9	0,03	0,52	0,245
12	**K6201 2RS**	12	32	10	0,035	0,69	0,31
15	**K6202 2RS**	15	35	11	0,04	0,78	0,38
17	**K6203 2RS**	17	40	12	0,06	7,36	4,48
20	**K6204 2RS**	20	47	14	0,1	9,88	6,2
25	**K6205 2RS**	25	52	15	0,13	10,78	6,98
30	**K6206 2RS**	30	62	16	0,2	14,97	10,04
35	**K6207 2RS**	35	72	17	0,29	19,75	13,67
40	**K6208 2RS**	40	80	18	0,37	22,71	15,94
45	**K6209 2RS**	45	85	19	0,46	24,36	17,71
50	**K6210 2RS**	50	90	20	0,57	26,98	19,84

- warehouse - order - phone

https://nppnovoteh.com

Basic makes*	Equivalent		Bearing No.
-			
	76200	UD200	**K6200 2RS**
	76201	UD201	**K6201 2RS**
	76202	UD202	**K6202 2RS**
	76203	UD203	**K6203 2RS**
	76204	UD204	**K6204 2RS**
	76205	UD205	**K6205 2RS**
	76206	UD206	**K6206 2RS**
	76207	UD207	**K6207 2RS**
	76208	UD208	**K6208 2RS**
	76209	UD209	**K6209 2RS**
	76210	UD210	**K6210 2RS**

* Other products also available



https://nppnovoteh.com

14. INSERT BALL BEARINGS

14.2. Insert ball bearings – type – SA..



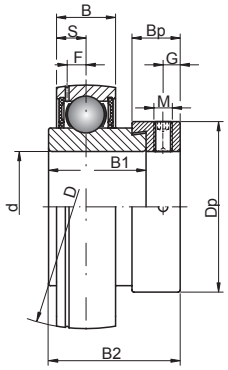

SA..

12 – 60 mm

Shaft [mm]	Bearing No.	Dimensions [mm]									
		d	D	B2	B1	B	S	bolt size	G	Bp	Dp
12	**SA201**	12	40	28,6	19,1	12	6,5	M6X1	4,8	13,5	28,6
15	**SA202**	15	40	28,6	19,1	12	6,5	M6X1	4,8	13,5	28,6
17	**SA203**	17	40	28,6	19,1	12	6,5	M6X1	4,8	13,5	28,6
20	**SA204**	20	47	31	21,5	14	7,5	M6X1	4,8	13,5	33,3
25	**SA205**	25	52	31	21,5	15	7,5	M6X1	4,8	13,5	38,1
30	**SA206**	30	62	35,7	23,8	16	9	M8X1	6,0	15,9	44,5
35	**SA207**	35	72	38,9	25,4	17	9,5	M8X1	6,8	17,5	55,6
40	**SA208**	40	80	43,7	30,2	18	11	M8X1	6,8	18,3	60,3
45	**SA209**	45	85	43,7	30,2	19	11	M8X1	6,8	18,3	63,5
50	**SA210**	50	90	43,7	30,2	20	11	M8X1	6,8	18,3	69,9
55	**SA211**	55	100	48,4	32,5	21	12	M8X1	8,0	20,7	76,2
60	**SA212**	60	110	53,1	37,2	22	13,5	M10X1	8,0	22,3	84,2

- warehouse - order - phone

https://nppnovoteh.com

Weight [kg]	Basic load ratings [kN]		Basic makes*	Equivalent			Bearing No.
	dyn. C	stat. C_0	-				
0,12	7,36	4,48		FD201	16201	UE201	**SA201**
0,1	7,36	4,48		FD202	16202	UE202	**SA202**
0,09	7,36	4,48		FD203	16203	UE203	**SA203**
0,16	9,88	6,2		FD204	16204	UE204	**SA204**
0,2	10,78	6,98		FD205	16205	UE205	**SA205**
0,3	14,97	10,04		FD206	16206	UE206	**SA206**
0,42	19,75	13,67		FD207	16207	UE207	**SA207**
0,6	22,71	15,94		FD208	16208	UE208	**SA208**
0,76	24,36	17,71		FD209	16209	UE209	**SA209**
0,91	26,98	19,84		FD210	16210	UE210	**SA210**
1,26	33,37	25,11		FD211	16211	UE211	**SA211**
1,7	36,74	27,97		FD212	16212	UE212	**SA212**

* Other products also available



https://nppnovoteh.com

14. INSERT BALL BEARINGS

14.3. Insert ball bearings – type – FD..



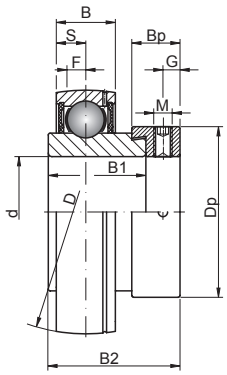

FD..

12 – 60 mm

Shaft [mm]	Bearing No.	Dimensions [mm]									
		d	D	B2	B1	B	S	bolt size	G	Bp	Dp
12	**FD201**	12	40	28,6	19,1	12	6,5	M6X1	4,8	13,5	28,6
15	**FD202**	15	40	28,6	19,1	12	6,5	M6X1	4,8	13,5	28,6
17	**FD203**	17	40	28,6	19,1	12	6,5	M6X1	4,8	13,5	28,6
20	**FD204**	20	47	31	21,5	14	7,5	M6X1	4,8	13,5	33,3
25	**FD205**	25	52	31	21,5	15	7,5	M6X1	4,8	13,5	38,1
30	**FD206**	30	62	35,7	23,8	16	9	M8X1	6,0	15,9	44,5
35	**FD207**	35	72	38,9	25,4	17	9,5	M8X1	6,8	17,5	55,6
40	**FD208**	40	80	43,7	30,2	18	11	M8X1	6,8	18,3	60,3
45	**FD209**	45	85	43,7	30,2	19	11	M8X1	6,8	18,3	63,5
50	**FD210**	50	90	43,7	30,2	20	11	M8X1	6,8	18,3	69,9
55	**FD211**	55	100	48,4	32,5	21	12	M8X1	8,0	20,7	76,2
60	**FD212**	60	110	53,1	37,2	22	13,5	M10X1	8,0	22,3	84,2

- warehouse - order - phone

https://nppnovoteh.com

Weight [kg]	Basic load ratings [kN]		Basic makes*	Equivalent			Bearing No.
	dyn. C	stat. C_0	-				
0,12	7,36	4,48		FD201	16201	UE201	**FD201**
0,1	7,36	4,48		FD202	16202	UE202	**FD202**
0,09	7,36	4,48		FD203	16203	UE203	**FD203**
0,16	9,88	6,2		FD204	16204	UE204	**FD204**
0,2	10,78	6,98		FD205	16205	UE205	**FD205**
0,3	14,97	10,04		FD206	16206	UE206	**FD206**
0,42	19,75	13,67		FD207	16207	UE207	**FD207**
0,6	22,71	15,94		FD208	16208	UE208	**FD208**
0,76	24,36	17,71		FD209	16209	UE209	**FD209**
0,91	26,98	19,84		FD210	16210	UE210	**FD210**
1,26	33,37	25,11		FD211	16211	UE211	**FD211**
1,7	36,74	27,97		FD212	16212	UE212	**FD212**



* Other products also available

https://nppnovoteh.com

14. INSERT BALL BEARINGS

14.4. Insert ball bearings – type – SB..



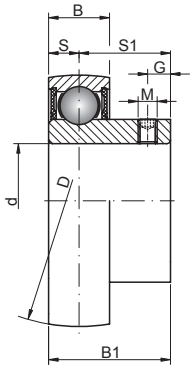

SB..

12 – 60 mm

Shaft [mm]	Bearing No.	Dimensions [mm]							
		d	D	B	B1	S	S1	bolt size	G
12	**SB201**	12	40	12	22	6	16	M5X0,8	4,5
15	**SB202**	15	40	12	22	6	16	M5X0,8	4,5
17	**SB203**	17	40	12	22	6	16	M5X0,8	4,5
20	**SB204**	20	47	14	25	7	18	M6X1	4,5
25	**SB205**	25	52	15	27	7,5	19,5	M6X1	5,5
30	**SB206**	30	62	16	30	8	22	M6X1	6
35	**SB207**	35	72	17	32	8,5	23,5	M8X1	6,5
40	**SB208**	40	80	18	34	9	25	M8X1	7
45	**SB209**	45	85	19	41,2	10,2	31	M8X1	8,2
50	**SB210**	50	90	20	43,5	10,9	32,6	M10X1	9,2
55	**SB211**	55	100	21	45,3	11,8	33,5	M10X1	9,8
60	**SB212**	60	110	22	53,7	14,9	38,8	M10X1	9,8

- warehouse - order - phone

https://nppnovoteh.com

Weight [kg]	Basic load ratings [kN]		Basic makes*	Equivalent	Bearing No.
	dyn. C	stat. C_0	-		
0,10	7,36	4,48		US201	**SB201**
0,1	7,36	4,48		US202	**SB202**
0,09	7,36	4,48		US203	**SB203**
0,13	9,88	6,2		US204	**SB204**
0,16	10,78	6,98		US205	**SB205**
0,25	14,97	10,04		US206	**SB206**
0,38	19,75	13,67		US207	**SB207**
0,6	22,71	15,94		US208	**SB208**
0,8	24,36	17,71		US209	**SB209**
0,8	26,98	19,84		US210	**SB210**
1,1	33,37	25,11		US211	**SB211**
1,3	36,74	27,97		US212	**SB212**

* Other products also available



https://nppnovoteh.com

14. INSERT BALL BEARINGS

14.5. Insert ball bearings – type – UC..



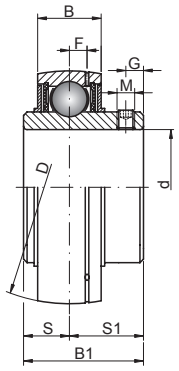

UC..

12 – 80 mm

Shaft [mm]	Bearing No.	Dimensions [mm]								
		d	D	B1	B	S	S1	G	bolt size	F
12	**UC201**	12	47	31	17	12,7	18,3	4,8	M6X1	3,7
15	**UC202**	15	47	31	17	12,7	18,3	4,8	M6X1	3,7
17	**UC203**	17	47	31	17	12,7	18,3	4,8	M6X1	3,7
20	**UC204**	20	47	31	17	12,7	18,3	4,8	M6X1	3,7
25	**UC205**	25	52	34,1	17	14,3	19,8	5	M6X1	3,9
	UCX05	25	62	38,1	19	15,9	22,2	5	M6X1	5
	UC305	25	62	38	20	15	23	6	M6X1	5,4
30	**UC206**	30	62	38,1	19	15,9	22,2	5	M6X1	5
	UCX06	30	72	42,9	20	17,5	25,4	7	M8X1	5,7
	UC306	30	72	43	23	17	26	6	M6X1	5,7
35	**UC207**	35	72	42,9	20	17,5	25,4	7	M8X1	5,7
	UCX07	35	80	49,2	21	19	30,2	8	M8X1	6,2
	UC307	35	80	48	25	19	29	8	M8X1	6,2
40	**UC208**	40	80	49,2	21	19	30,2	8	M8X1	6,2
	UCX08	40	85	49,2	22	19	30,2	8	M8X1	6,4
	UC308	40	90	52	27	19	33	10	M10X1	7
45	**UC209**	45	85	49,2	22	19	30,2	8	M8X1	6,4
	UCX09	45	90	51,6	24	19	32,6	10	M10X1	6,5
	UC309	45	100	57	30	22	35	10	M10X1	7,8
50	**UC210**	50	90	51,6	24	19	32,6	10	M10X1	6,5
	UCX10	50	100	55,6	25	22,2	33,4	10	M10X1	7
	UC310	50	110	61	32	22	39	12	M12X1,5	8,5
55	**UC211**	55	100	55,6	25	22,2	33,4	10	M10X1	7
	UCX11	55	110	65,1	27	25,4	39,7	10	M10X1	7,6
	UC311	55	120	66	34	25	41	12	M12X1,5	9,2
60	**UC212**	60	110	65,1	27	25,4	39,7	10	M10X1	7,6
	UCX12	60	120	65,1	28	25,4	39,7	10	M10X1	8,5
	UC312	60	130	71	36	26	45	12	M12X1,5	9,8
65	**UC213**	65	120	65,1	28	25,4	39,7	10	M10X1	8,5
	UCX13	65	125	74,6	29	30,2	44,4	12	M12X1,5	8,9
	UC313	65	140	75	38	30	45	12	M12X1,5	10,5
70	**UC214**	70	125	74,6	29	30,2	44,4	12	M12X1,5	8,9
	UCX14	70	130	77,8	30	33,3	44,5	12	M12X1,5	9,2
	UC314	70	150	78	40	33	45	12	M12X1,5	11,1
75	**UC215**	75	130	77,8	30	33,3	44,5	12	M12X1,5	9,2
	UCX15	75	140	82,6	32	33,3	49,3	12	M12X1,5	9,5
	UC315	75	160	82	42	32	50	14	M14X1,5	11,8
80	**UC216**	80	140	82,6	32	33,3	49,3	12	M12X1,5	9,5
	UCX16	80	150	85,7	34	34,1	51,6	12	M12X1,5	10,2
	UC316	80	170	86	44	34	52	14	M14X1,5	12,5

- warehouse - order - phone

https://nppnovoteh.com

Weight [kg]	Basic load ratings [kN]		Basic makes*	Equivalent		Bearing No.
	dyn. C	stat. C_0	-			
0,20	9,88	6,2	⬒	FB201	56201	**UC201**
0,19	9,88	6,2	⬒	FB202	56202	**UC202**
0,18	9,88	6,2	⬒	FB203	56203	**UC203**
0,16	9,88	6,2	⬒	FB204	56204	**UC204**
0,2	10,78	6,98	⬒	FB205	56205	**UC205**
0,39	14,97	10,04	◴	-	-	**UCX05**
0,35	17,22	11,93	◴	-	-	**UC305**
0,32	14,97	10,04	⬒	FB206	56206	**UC206**
0,68	19,75	13,67	◴	-	-	**UCX06**
0,56	20,77	14,17	◴	-	-	**UC306**
0,48	19,75	13,67	⬒	FB207	56207	**UC207**
0,82	22,71	15,94	◴	-	-	**UCX07**
0,71	25,66	17,92	◴	-	-	**UC307**
0,64	22,71	15,94	⬒	FB208	56208	**UC208**
0,93	24,36	17,71	◴	-	-	**UCX08**
0,96	31,35	22,38	◴	-	-	**UC308**
0,68	24,36	17,71	⬒	FB209	56209	**UC209**
1	26,98	19,84	◴	-	-	**UCX09**
1,28	40,66	30	◴	-	-	**UC309**
0,8	26,98	19,84	⬒	FB210	56210	**UC210**
1,35	33,37	25,11	◴	-	-	**UCX10**
1,65	47,58	35,71	◴	-	-	**UC310**
1,11	33,37	25,11	⬒	FB211	56211	**UC211**
1,9	36,74	27,97	◴	-	-	**UCX11**
2,07	55,05	41,91	◴	-	-	**UC311**
1,54	36,74	27,97	⬒	FB212	56212	**UC212**
2,27	44,01	34,18	◴	-	-	**UCX12**
2,6	62,88	48,6	◴	-	-	**UC312**
1,85	44,01	34,18	⬒	FB213	56213	**UC213**
2,45	46,79	37,59	◴	-	-	**UCX13**
3,25	72,21	56,68	◴	-	-	**UC313**
2,05	46,79	37,59	⬒	FB214	56214	**UC214**
2,47	50,85	41,26	◴	-	-	**UCX14**
3,89	80,1	63,48	◴	-	-	**UC314**
2,21	50,85	41,26	⬒	FB215	56215	**UC215**
3,11	55,04	45,09	◴	-	-	**UCX15**
4,72	87,25	71,67	◴	-	-	**UC315**
2,8	55,04	45,09	⬒	FB216	56216	**UC216**
3,79	64,01	53,28	◴	-	-	**UCX16**
5,55	94,57	80,35	◴	-	-	**UC316**

* Other products also available

https://nppnovoteh.com

14. INSERT BALL BEARINGS

14.5. Insert ball bearings – type – UC..



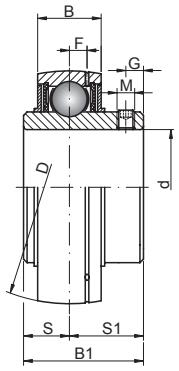

UC..

85 – 95 mm

Shaft [mm]	Bearing No.	Dimensions [mm]								
		d	D	B1	B	S	S1	G	bolt size	F
85	**UC217**	85	150	85,7	34	34,1	51,6	12	M12X1,5	10,2
	UCX17	85	160	96	36	39,7	56,3	12	M12X1,5	11,2
	UC317	85	180	96	46	40	56	16	M16X1,5	13,1
90	**UC218**	90	160	96	36	39,7	56,3	12	M12X1,5	11,2
	UC318	90	190	96	48	40	56	16	M16X1,5	13,8
95	**UC319**	95	200	103	50	41	62	16	M16X1,5	14,7

- warehouse - order - phone

https://nppnovoteh.com

Weight [kg]	Basic load ratings [kN]		Basic makes*	Equivalent		Bearing No.
	dyn. C	stat. C_0	-			
3,46	64,01	53,28		FB217	56217	**UC217**
4,82	73,83	60,76		-	-	**UCX17**
6,67	102,05	89,52		-	-	**UC317**
4,36	73,83	60,76		FB218	56218	**UC218**
7,56	110,81	100,76		-	-	**UC318**
8,7	120,51	103,75		-	-	**UC319**

* Other products also available



https://nppnovoteh.com

14. INSERT BALL BEARINGS

14.6. Insert ball bearings – type – UK..



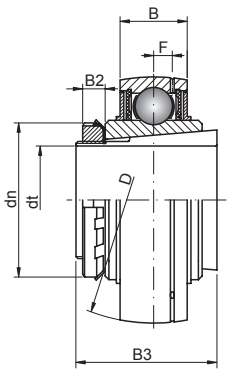

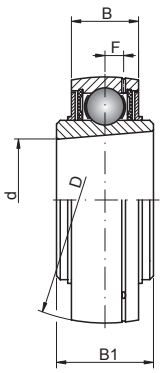

UK..

12 – 80 mm

Shaft [mm]	Bearing No.	Sleeve No.	Dimensions [mm]								
			d	D	B	B1	B2	B3	dt	dn	F
25	**UK205**	H2305	25	52	17	23	8	35	20	38	3,9
30	**UK206**	H2306	30	62	19	26	8	38	25	45	5
35	**UK207**	H2307	35	72	20	29	9	43	30	52	5,7
40	**UK208**	H2308	40	80	21	31	10	46	35	58	6,2
45	**UK209**	H2309	45	85	22	31	11	50	40	65	6,4
50	**UK210**	H2310	50	90	24	32	12	55	45	70	6,5
55	**UK211**	H2311	55	100	25	35	12	59	50	75	7
60	**UK212**	H2312	60	110	27	38	13	62	55	80	7,6
65	**UK213**	H2313	65	120	28	40	14	65	60	85	8,5
75	**UK215**	H2315	75	130	30	44	15	73	65	98	9,2
80	**UK216**	H2316	80	140	32	45	17	78	70	105	9,5
85	**UK217**	H2317	85	150	34	46	18	82	75	110	10,2
90	**UK218**	H2318	90	160	36	47	18	86	80	120	11,2

- warehouse - order - phone

https://nppnovoteh.com

Weight [kg]	Basic load ratings [kN]		Basic makes*	Bearing No.
	dyn. C	stat. C_0	-	
0,25	10,78	6,98	◴	**UK205**
0,36	14,97	10,04	◴	**UK206**
0,57	19,75	13,67	◴	**UK207**
0,74	22,71	15,94	◴	**UK208**
0,83	24,36	17,71	◴	**UK209**
0,97	26,98	19,84	◴	**UK210**
1,26	33,37	25,11	◴	**UK211**
1,59	36,74	27,97	◴	**UK212**
1,76	44,01	34,18	◴	**UK213**
2,32	50,85	41,26	◴	**UK215**
3,06	55,04	45,09	◴	**UK216**
3,88	64,01	53,28	◴	**UK217**
4,74	73,83	60,76	◴	**UK218**

* Other products also available



https://nppnovoteh.com

15. BEARING UNITS AND BEARING HOUSINGS

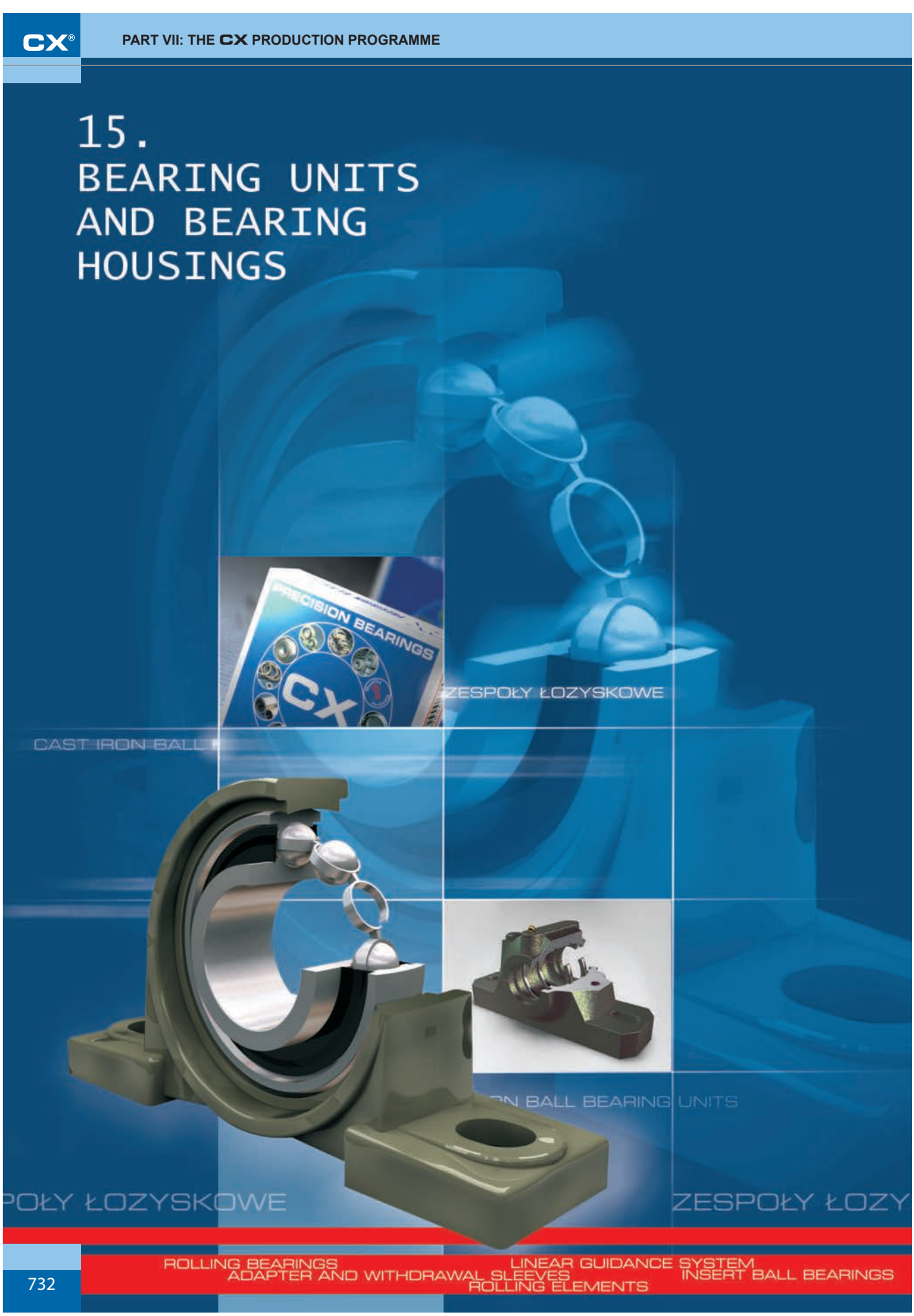

https://nppnovoteh.com

TABLES:

15. BEARING UNITS AND BEARING HOUSINGS
15.1. Cast-iron bearings units with insert ball bearings – type – UCP
15.2. Cast-iron bearings units with insert ball bearings – type – UCPA
15.3. Cast-iron bearings units with insert ball bearings – type – UCF
15.4. Cast-iron bearings units with insert ball bearings – type – UCFL
15.5. Cast-iron bearings units with insert ball bearings – type – UCFC
15.6. Cast-iron bearings units with insert ball bearings – type – UCT
15.7. Cast-iron bearings units with insert ball bearings – type – UKP
15.8. Cast-iron bearings units with insert ball bearings – type – UKF
15.9. Cast-iron bearings units with insert ball bearings – type – UKFL
15.10. Cast-iron bearings units with insert ball bearings – type – UKFC
15.11. Cast-iron bearings units with insert ball bearings – type – UKT
15.12. Split bearing housings for spherical roller and self aligning bearings – type SN
15.13. Split bearing housings for spherical roller and self aligning bearings – type SNU

INTRODUCTION:

15. Cast-iron bearing housings – bearing units

15.1. Cast-iron bearing housings – bearing units

15.1.1. Dimension series:

- **..P..** – P-type – two fixing bores
- **..PA..** – P-type – two fixing bores
- **..F..** – F-type – four fixing bores
- **..FL..** – F-type – two fixing bores
- **..FC..** – F-type – four fixing bores
- **..T..** – T-type – special tension fixing

15.1.2. Structure

Cast-iron bearing housings serve as elements of the so-called bearing units. These units are formed together with all kinds of insert ball bearings. Bearing housings can be divided into three types: P, F and T. P-type housings have fixing bores pointing out at right angle to the shaft axis, and



Fig.47 UCP-type bearing unit

they are commonly called “standing” bearing housings, whereas in the PA-version bores are made in the housing itself and in the A-type they are located in the housing’s flanges. The fixing bores of F-type bearing housings are arranged parallell to the shaft axis. Square-shaped F-type has four bores, FL-type shaped as an extended ellipse has two fixing bores and the circular FC-type bearing housing has four fixing bores. The most specific features has the T-type bearing housing, called a tension-fixing housing. T-shape and the ability of adjusting the tension through a special fixing are the most distinguishing features of this bearing housing. All housings are made of modified gray cast iron and equipped with a valve delivering grease, whereas one shall pay special attention to the proper placement of the lubricating groove and bore in the mounted bearing.



Fig.48 UCPA-Type bearing unit

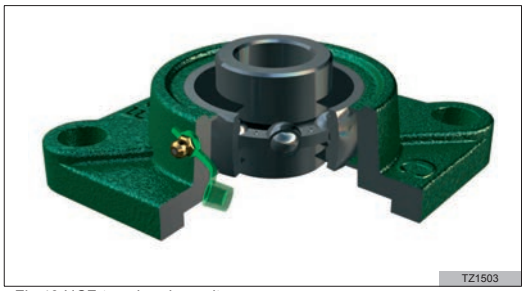

Fig.49 UCF-type bearing unit

15.1.3. The designation structure of bearing units’ symbols

The system of creating designations for ready-to-use bearing units bases on the rule of combining the symbols of individual parts of the bearing housing and bearing itself. CX terminology puts the bearing symbol on the first position followed by the bearing housing symbol. For comparison, bearing units’ symbols in the FŁT terminology are formed the other way round:

- CX designation – bearing symbol + bearing housing symbol e.g. UC205 + P205 = UCP205

Traditional Polish designation is as follows: bearing housing symbol + bearing symbol e.g. Z205 + FB205 = ZFB205.

https://nppnovoteh.com

15.1.4. Features and application

It is hard to specify only the features of bearing housings themselves because really important features can be seen only after bearing units have been formed. Just the same as insert ball bearings themselves have no special features in comparison to deep-groove ball bearings, also the bearing housings themselves have no features significant for bearing system. On the other hand features of the bearing unit can be compared to those of the self-aligning spherical roller bearing or self-aligning ball bearing. At the same time it is not important what kind of bearing has been assembled in the housing – unit features are going to be the same.

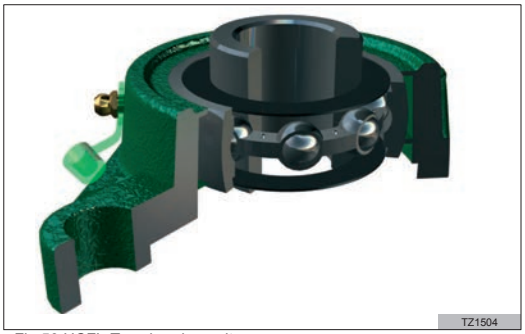

Fig.50 UCFL-Type bearing unit

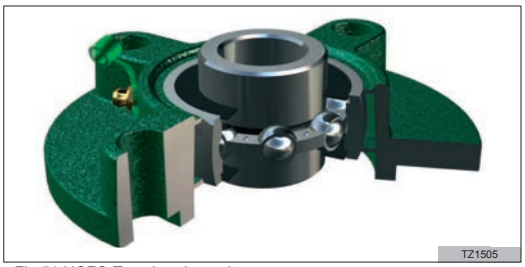

Fig.51 UCFC-Type bearing unit



Fig.52 UCT-Type bearing unit

One should take into account that a bearing unit is an element that is ready to be built-in. A very simple design, easiness of mounting and dismounting, if necessary, easy replacement of an insert ball bearings, and a low cost of a bearing unit – all this results in a great popularity of bearing units. Owing to the self-alignment ability, bearing units are able to compensate errors of alignment, thus correcting assembly inaccuracies or deviations caused by shaft deflections. The bearing structure ensures own grease supply and effective seal. Enlarged radial clearance affects positively the ability of compensation of shaft deflections and heat deformations. In case of heavy and continuous operation additional lubrication of the bearing located in the housing is necessary. Valves located in each housing type make it possible. During assembly one should pay special attention to the fact that the lubricating bore in the housing should match the lubricating groove and the lubricating hole of the mounted bearing. Owing to their advantages bearing units are widely applied in agricultural machines, construction machines, mining installations, textile machines, conveyors, fans and in the food and woodworking industry.

15.2. Split bearing housings for spherical roller and self aligning bearings

15.2.1. Dimension series

- **SN..** - felt seal
- **SNU..** - plastic seal (U-ring).

15.2.2. Key features

“Standing”, cast-iron, split bearing housings of **SN**- and **SNU**-types are for housing self-aligning ball bearings and spherical roller bearings, more rarely for housing deep-groove ball bearings, mounted on the shaft both directly and by means of an adapter and withdrawal sleeve. Bearing seatings are made within tolerance range enabling freely shifting of the bearing inside the housing in both directions and compensating changes in the shaft length resulting from heat expansion and assembly inaccuracies. Lengthened fixing bores in the housing base enable additional axial fixing.
These bearing housings differ from each other in the seal type in the first place. In the **SN** seals sealing felt strips are implemented and in the **SNU**-type seals special sealing **U**-rings are used. It is standard practice to position **PU**-rings inside each housing for fixing the bearings.

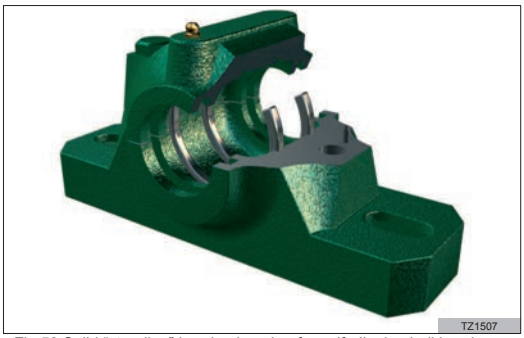

Fig.53 Solid “standing” bearing housing for self-aligning ball bearings and spherical roller bearings of SN-type.



Fig.54 Solid “standing” bearing housing for self-aligning ball bearings and spherical roller bearings of SNU-type

https://nppnovoteh.com

https://nppnovoteh.com

15. BEARING UNITS AND BEARING HOUSINGS

15.1. Cast-iron bearings units with insert ball bearings – type – UCP



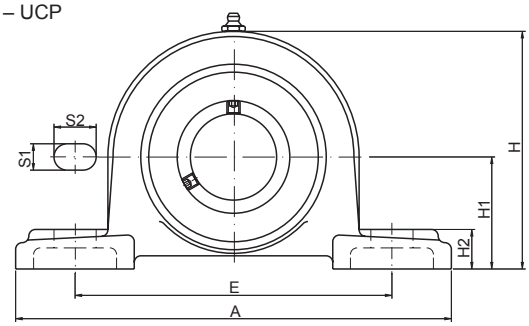

UCP..

12 – 80 mm

Shaft [mm]	Unit No.	Dimensions [mm]											
		d	H1	A	E	P	S1	S2	H2	H	B	F	bolt size
12	**UCP201**	12	30,2	127	95	38	13	19	14	62	31	12,7	M10
15	**UCP202**	15	30,2	127	95	38	13	19	14	62	31	12,7	M10
17	**UCP203**	17	30,2	127	95	38	13	19	14	62	31	12,7	M10
20	**UCP204**	20	33,3	127	95	38	13	19	14	65	31	127,7	M10
25	**UCP205**	25	36,5	140	105	38	13	19	15	71	34,1	14,3	M10
	UCPX05	25	44,4	159	119	51	17	20	18	85	38,1	15,9	M14
	UCP305	25	45	175	132	45	17	20	15	85	38	38	M14
30	**UCP206**	30	42,9	165	121	48	17	20	17	84	38,1	15,9	M14
	UCPX06	30	47,6	175	127	57	17	20	20	93	42,9	17,5	M14
	UCP306	30	50	180	140	50	17	20	18	95	43	17	M14
35	**UCP207**	35	47,6	167	127	48	17	20	18	93	42,9	17,5	M14
	UCPX07	35	54	203	144	57	17	20	21	105	49,2	19	M14
	UCP307	35	56	210	160	56	17	25	20	106	48	19	M14
40	**UCP208**	40	49,2	184	137	54	17	20	18	100	49,2	19	M14
	UCPX08	40	58,7	222	156	67	20	23	26	111	49,2	19	M16
	UCP308	40	60	220	170	60	17	27	22	116	52	19	M14
45	**UCP209**	45	54	190	146	54	17	20	20	106	49,2	19	M14
	UCPX09	45	58,7	222	156	67	20	23	26	116	51,6	19	M16
	UCP309	45	67	245	190	67	20	30	24	129	57	22	M16
50	**UCP210**	50	57,2	206	159	60	20	23	21	113	51,6	19	M16
	UCPX10	50	63,5	241	171	73	20	23	27	126	55,6	22,2	M16
	UCP310	50	75	275	212	75	20	35	27	143	61	22	M16
55	**UCP211**	55	63,5	219	171	60	20	23	23	125	55,6	22,2	M16
	UCPX11	55	69,8	260	184	79	25	28	30	137	65,1	25,4	M20
	UCP311	55	80	310	236	80	20	38	30	154	66	25	M16
60	**UCP212**	60	69,8	241	184	70	20	23	25	138	65,1	25,4	M16
	UCPX12	60	76,2	286	203	83	25	28	33	151	65,1	25,4	M20
	UCP312	60	85	330	250	85	25	38	32	165	71	26	M20
65	**UCP213**	65	76,2	265	203	70	25	28	27	150	65,1	25,4	M20
	UCPX13	65	76,2	286	203	83	25	28	33	154	74,6	30,2	M20
	UCP313	65	90	340	260	90	25	38	33	176	75	30	M20
70	**UCP214**	70	79,4	266	210	72	25	28	27	156	74,6	30,2	M20
	UCPX14	70	88,9	330	229	89	27	30	35	170	77,8	33,3	M22
	UCP314	70	95	360	280	90	27	40	35	187	78	33	M22
75	**UCP215**	75	82,6	275	217	74	25	28	28	162	77,8	33,3	M20
	UCPX15	75	88,9	330	229	89	27	30	35	175	82,6	33,3	M22
	UCP315	75	100	380	290	100	27	40	35	198	82	32	M22
80	**UCP216**	80	88,9	292	232	78	25	28	30	174	82,6	33,3	M20
	UCPX16	80	101,6	381	283	102	27	30	40	194	85,7	34,1	M22
	UCP316	80	106	400	300	110	27	40	40	210	86	34	M22

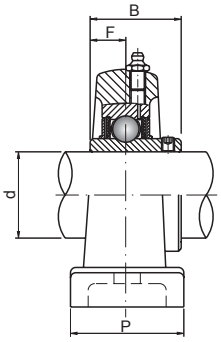

Weight [kg]	Composition		Basic makes*	Equivalent	Unit No.
	bearing	housing	-		
0,69	UC201	P203		ZFB201	**UCP201**
0,69	UC202	P203		ZFB202	**UCP202**
0,68	UC203	P203		ZFB203	**UCP203**
0,66	UC204	P204		ZFB204	**UCP204**
0,81	UC205	P205		ZFB205	**UCP205**
1,5	UCX05	PX05		-	**UCPX05**
1,4	UC305	P305		-	**UCP305**
1,24	UC206	P206		ZFB206	**UCP206**
2	UCX06	PX06		-	**UCPX06**
1,8	UC306	P306		-	**UCP306**
1,58	UC207	P207		ZFB207	**UCP207**
2,6	UCX07	PX07		-	**UCPX07**
2,8	UC307	P307		-	**UCP307**
1,89	UC208	P208		ZFB208	**UCP208**
3,3	UCX08	PX08		-	**UCPX08**
3	UC308	P308		-	**UCP308**
2,14	UC209	P209		ZFB209	**UCP209**
3,3	UCX09	PX09		-	**UCPX09**
4,1	UC309	P309		-	**UCP309**
2,66	UC210	P210		ZFB210	**UCP210**
4,3	UCX10	PX10		-	**UCPX10**
5,8	UC310	P310		-	**UCP310**
3,31	UC211	P211		ZFB211	**UCP211**
5,7	UCX11	PX11		-	**UCPX11**
7,4	UC311	P311		-	**UCP311**
4,9	UC212	P212		ZFB212	**UCP212**
7,3	UCX12	PX12		-	**UCPX12**
9,4	UC312	P312		-	**UCP312**
5,15	UC213	P213		ZFB213	**UCP213**
7,6	UCX13	PX13		-	**UCPX13**
10	UC313	P313		-	**UCP313**
6,2	UC214	P214		ZFB214	**UCP214**
9,9	UCX14	PX14		-	**UCPX14**
12	UC314	P314		-	**UCP314**
7,16	UC215	P215		ZFB215	**UCP215**
11	UCX15	PX15		-	**UCPX15**
14	UC315	P315		-	**UCP315**
8,1	UC216	P216		ZFB216	**UCP216**
15	UCX16	PX16		-	**UCPX16**
18	UC316	P316		-	**UCP316**

* Other products also available

https://nppnovoteh.com

15. BEARING UNITS AND BEARING HOUSINGS

15.1. Cast-iron bearings units with insert ball bearings – type – UCP



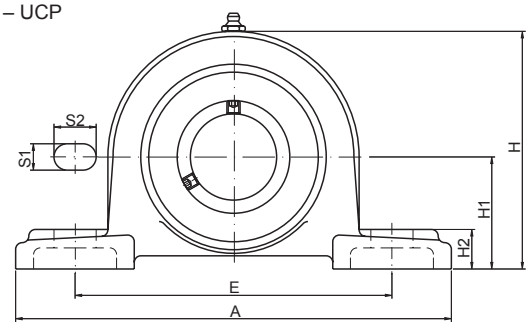

UCP..

85– 95 mm

Shaft [mm]	Unit No.	Dimensions [mm]											
		d	H1	A	E	P	S1	S2	H2	H	B	F	bolt size
85	**UCP217**	85	95,2	310	247	83	25	28	32	185	85,7	34,1	M20
	UCPX17	85	101,6	381	283	102	27	30	40	200	96	39,7	M22
	UCP317	85	112	420	320	110	33	45	40	220	96	40	M27
90	**UCP218**	90	101,6	327	262	88	27	30	33	198	96	39,7	M22
	UCP318	90	118	430	330	110	33	45	45	235	96	40	M27
	UCP319	95	125	470	360	120	36	50	45	250	103	41	M30

- warehouse - order - phone

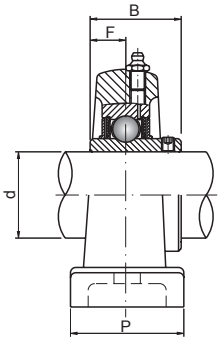

Weight [kg]	Composition		Basic makes*	Equivalent	Unit No.
	bearing	housing	-		
9,81	UC217	P217		ZFB217	**UCP217**
16	UCX17	PX17		-	**UCPX17**
20	UC317	P317		-	**UCP317**
11,96	UC218	P218		ZFB218	**UCP218**
24	UC318	P318		-	**UCP318**
29	UC319	P319		-	**UCP319**

* Other products also available



https://nppnovoteh.com

15. BEARING UNITS AND BEARING HOUSINGS

15.2. Cast-iron bearings units with insert ball bearings – type – UCPA



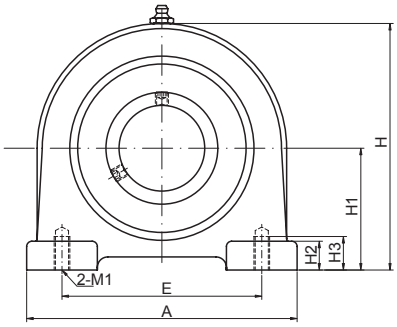

UCPA..

12 – 65 mm

Shaft [mm]	Unit No.	Dimensions [mm]											
		d	H1	A	E	P	bolt size	H3	H2	H	B	F	bolt size
12	**UCPA201**	12	30,2	76	52	40	M10	15	11	62	31	12,7	M10
15	**UCPA202**	15	30,2	76	52	40	M10	15	11	62	31	12,7	M10
17	**UCPA203**	17	30,2	76	52	40	M10	15	11	62	31	12,7	M10
20	**UCPA204**	20	30,2	76	52	40	M10	15	11	62	31	12,7	M10
25	**UCPA205**	25	36,5	84	56	38	M10	15	12	72	34,1	14,3	M10
30	**UCPA206**	30	42,9	94	66	50	M14	18	12	84	38,1	15,9	M14
35	**UCPA207**	35	47,6	110	80	55	M14	20	13	95	42,9	17,5	M14
40	**UCPA208**	40	49,2	116	84	58	M14	20	13	100	49,2	19	M14
45	**UCPA209**	45	54,2	120	90	60	M14	25	13	108	49,2	19	M14
50	**UCPA210**	50	57,2	130	94	64	M16	25	14	116	51,6	19	M16
55	**UCPA211**	55	63,5	140	104	66	M16	25	14	125	55,6	22,2	M16
60	**UCPA212**	60	69,9	150	114	68	M16	25	15	138	65,1	25,4	M16
65	**UCPA213**	65	76,2	160	124	70	M16	25	15	150	65,1	25,4	M16

- warehouse - order - phone

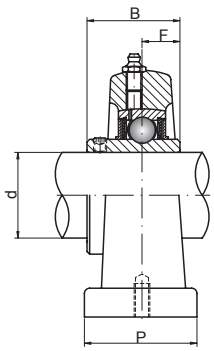

Weight [kg]	Composition		Basic makes*	Unit No.
	bearing	housing	-	
0,6	UC201	PA204		**UCPA201**
0,59	UC202	PA204		**UCPA202**
0,58	UC203	PA204		**UCPA203**
0,56	UC204	PA204		**UCPA204**
0,83	UC205	PA205		**UCPA205**
1,12	UC206	PA206		**UCPA206**
1,48	UC207	PA207		**UCPA207**
1,89	UC208	PA208		**UCPA208**
1,98	UC209	PA209		**UCPA209**
2,16	UC210	PA210		**UCPA210**
3,26	UC211	PA211		**UCPA211**
4,19	UC212	PA212		**UCPA212**
5,23	UC213	PA213		**UCPA213**

* Other products also available



https://nppnovoteh.com

15. BEARING UNITS AND BEARING HOUSINGS

15.3. Cast-iron bearings units with insert ball bearings – type – UCF



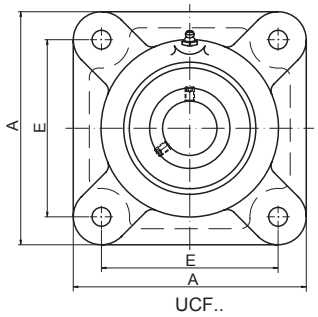

UCF..

12 – 80 mm

Shaft [mm]	Unit No.	Dimensions [mm]										
		d	A	E	C	G	L	S	Z	B	F	bolt size
12	**UCF201**	12	86	64	15	12	25,5	12	33,3	31	12,7	M10
15	**UCF202**	15	86	64	15	12	25,5	12	33,3	31	12,7	M10
17	**UCF203**	17	86	64	15	12	25,5	12	33,3	31	12,7	M10
20	**UCF204**	20	86	64	15	12	25,5	12	33,3	31	12,7	M10
25	**UCF205**	25	95	70	16	14	27	12	35,8	34,1	14,3	M10
	UCFX05	25	108	83	18	13	30	12	40,2	38,1	15,9	M10
	UCF305	25	110	80	16	13	29	16	39	38	15	M14
30	**UCF206**	30	108	83	18	14	31	12	40,2	38,1	15,9	M10
	UCFX06	30	117	92	19	14	34	16	44,4	42,9	17,5	M14
	UCF306	30	125	95	18	15	32	16	44	43	17	M14
35	**UCF207**	35	117	92	19	16	34	14	44,4	42,9	17,5	M12
	UCFX07	35	130	102	21	14	38	16	51,2	49,2	19	M14
	UCF307	35	135	100	20	16	36	19	49	48	19	M16
40	**UCF208**	40	130	102	21	16	36	16	51,2	49,2	19	M14
	UCFX08	40	137	105	22	14	40	19	52,2	49,2	19	M16
	UCF308	40	150	112	23	17	40	19	56	52	19	M16
45	**UCF209**	45	137	105	22	18	38	16	52,2	49,2	19	M14
	UCFX09	45	143	111	23	14	40	19	55,6	51,6	19	M16
	UCF309	45	160	125	25	18	44	19	60	57	22	M16
50	**UCF210**	50	143	111	22	18	40	16	54,6	51,6	19	M14
	UCFX10	50	162	130	26	20	44	19	59,4	55,6	22,2	M16
	UCF310	50	175	132	28	19	48	23	67	61	22	M20
55	**UCF211**	55	162	130	25	20	43	19	58,4	55,6	22,2	M16
	UCFX11	55	175	143	29	20	49	19	68,7	65,1	25,4	M16
	UCF311	55	185	140	30	20	52	23	71	66	25	M20
60	**UCF212**	60	175	143	29	20	48	19	68,7	65,1	25,4	M16
	UCFX12	60	187	149	34	21	59	19	73,7	65,1	25,4	M16
	UCF312	60	195	150	33	22	56	23	78	71	26	M20
65	**UCF213**	65	187	149	30	22	50	19	69,7	65,1	25,4	M16
	UCFX13	65	187	149	34	21	59	19	78,4	74,6	30,2	M16
	UCF313	65	208	166	33	22	58	23	78	75	30	M20
70	**UCF214**	70	193	152	31	22	54	19	75,4	74,6	30,2	M16
	UCFX14	70	197	152	37	24	60	23	81,5	77,8	33,3	M20
	UCF314	70	226	178	36	25	61	25	81	78	33	M22
75	**UCF215**	75	200	159	34	22	56	19	78,5	77,8	33,3	M16
	UCFX15	75	197	152	40	24	68	23	89,3	82,6	33,3	M20
	UCF315	75	236	184	39	25	66	25	89	82	32	M22
80	**UCF216**	80	208	165	34	22	58	23	83,3	82,6	33,3	M20
	UCFX16	80	214	171	40	24	70	23	91,6	85,7	34,1	M20
	UCF316	80	250	196	38	27	68	31	90	86	34	M27

- warehouse - order - phone

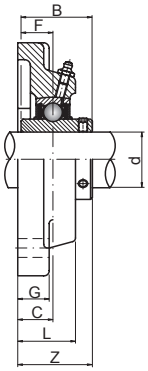

Weight [kg]	Composition		Basic makes*	Equivalent	Unit No.
	bearing	housing	-		
0,6	UC201	F204		KFB201	**UCF201**
0,59	UC202	F204		KFB202	**UCF202**
0,58	UC203	F204		KFB203	**UCF203**
0,56	UC204	F204		KFB204	**UCF204**
0,8	UC205	F205		KFB205	**UCF205**
1,0	UCX05	FX05		-	**UCFX05**
1,1	UC305	F305		-	**UCF305**
1,12	UC206	F206		KFB206	**UCF206**
1,7	UCX06	FX06		-	**UCFX06**
1,6	UC306	F306		-	**UCF306**
1,46	UC207	F207		KFB207	**UCF207**
2,1	UCX07	FX07		-	**UCFX07**
2	UC307	F307		-	**UCF307**
1,84	UC208	F208		KFB208	**UCF208**
2,4	UCX08	FX08		-	**UCFX08**
2,7	UC308	F308		-	**UCF308**
2,15	UC209	F209		KFB209	**UCF209**
2,5	UCX09	FX09		-	**UCFX09**
3,4	UC309	F309		-	**UCF309**
2,42	UC210	F210		KFB210	**UCF210**
3,9	UCX10	FX10		-	**UCFX10**
4,5	UC310	F310		-	**UCF310**
3,31	UC211	F211		KFB211	**UCF211**
4,9	UCX11	FX11		-	**UCFX11**
5,5	UC311	F311		-	**UCF311**
4,28	UC212	F212		KFB212	**UCF212**
5,2	UCX12	FX12		-	**UCFX12**
6,5	UC312	F312		-	**UCF312**
4,99	UC213	F213		KFB213	**UCF213**
5,3	UCX13	FX13		-	**UCFX13**
7,9	UC313	F313		-	**UCF313**
5,85	UC214	F214		KFB214	**UCF214**
7,3	UCX14	FX14		-	**UCFX14**
9,5	UC314	F314		-	**UCF314**
6,91	UC215	F215		KFB215	**UCF215**
8,1	UCX15	FX15		-	**UCFX15**
10,2	UC315	F315		-	**UCF315**
7,5	UC216	F216		KFB216	**UCF216**
9,9	UCX16	FX16		-	**UCFX16**
14	UC316	F316		-	**UCF316**

* Other products also available

https://nppnovoteh.com

15. BEARING UNITS AND BEARING HOUSINGS

15.3. Cast-iron bearings units with insert ball bearings – type – UCF



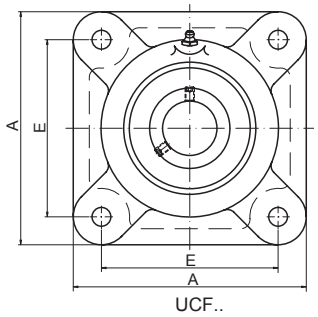

UCF..

85 – 95 mm

Shaft [mm]	Unit No.	Dimensions [mm]										
		d	A	E	C	G	L	S	Z	B	F	bolt size
85	**UCF217**	85	220	175	36	24	63	23	87,6	85,7	34,1	M20
	UCFX17	85	214	171	40	24	70	23	96,3	96	39,7	M20
	UCF317	85	260	204	44	27	74	31	100	96	40	M27
90	**UCF218**	90	235	187	40	24	68	23	96,3	96	39,7	M20
	UCF318	90	280	216	44	30	76	35	100	96	40	M30
95	**UCF319**	95	290	228	59	30	94	35	121	103	41	M30

- warehouse - order - phone

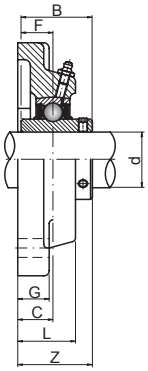

Weight [kg]	Composition		Basic makes*	Equivalent	Unit No.
	bearing	housing	-		
9,66	UC217	F217		KFB217	**UCF217**
11	UCX17	FX17		-	**UCFX17**
16	UC317	F317		-	**UCF317**
12,06	UC218	F218		KFB218	**UCF218**
19	UC318	F318		-	**UCF318**
22	UC319	F319		-	**UCF319**

* Other products also available

https://nppnovoteh.com

15. BEARING UNITS AND BEARING HOUSINGS

15.4. Cast-iron bearings units with insert ball bearings – type – UCFL



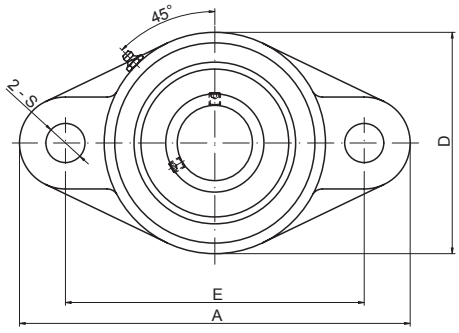

UCFL..

12 – 95 mm

Shaft [mm]	Unit No.	Dimensions [mm]											
		d	B	A	E	K	G	L	S	D	Z	F	bolt size
12	**UCFL201**	12	31	113	90	15	11	25,5	12	60	33,3	12,7	M10
15	**UCFL202**	15	31	113	90	15	11	25,5	12	60	33,3	12,7	M10
17	**UCFL203**	17	31	113	90	15	11	25,5	12	60	33,3	12,7	M10
20	**UCFL204**	20	31	113	90	15	11	25,5	12	60	33,3	12,7	M10
25	**UCFL205**	25	34,1	130	99	16	13	27	16	68	35,8	14,3	M14
	UCFLX05	25	38,1	141	117	18	13	30	12	83	40,2	15,9	M10
	UCFL305	25	38	150	113	16	13	29	19	80	39	15	M16
30	**UCFL206**	30	38,1	148	117	18	13	31	16	80	40,2	15,9	M14
	UCFLX06	30	42,9	156	130	19	15	34	16	95	44,4	17,5	M14
	UCFL306	30	43	180	134	18	15	32	23	90	44	17	M20
35	**UCFL207**	35	42,9	161	130	19	14	34	16	90	44,4	17,5	M14
	UCFLX07	35	49,2	171	144	21	16	38	16	105	51,2	19	M14
	UCFL307	35	48	185	141	20	16	36	23	100	49	19	M20
40	**UCFL208**	40	49,2	175	144	21	14	36	16	100	51,2	19	M14
	UCFLX08	40	49,2	179	148	22	16	40	16	111	52,2	19	M14
	UCFL308	40	52	200	158	23	17	40	23	112	56	19	M20
45	**UCFL209**	45	49,2	188	148	22	15	38	19	108	52,2	19	M16
	UCFLX09	45	51,6	189	157	23	16	40	16	116	55,6	19	M14
	UCFL309	45	57	230	177	25	18	44	25	125	60	22	M22
50	**UCFL210**	50	51,6	197	157	22	15	40	19	115	54,6	19	M16
	UCFLX10	50	55,6	216	184	26	18	44	19	133	59,4	22,2	M16
	UCFL310	50	61	240	187	28	19	48	25	140	67	22	M22
55	**UCFL211**	55	55,6	224	184	25	18	43	19	130	58,4	22,2	M16
	UCFL311	55	66	250	198	30	20	52	25	150	71	25	M22
60	**UCFL212**	60	65,1	250	202	29	18	48	23	140	68,7	25,4	M20
	UCFL312	60	71	270	212	33	22	56	31	160	78	26	M27
65	**UCFL213**	65	65,1	258	210	30	22	50	23	155	69,7	25,4	M20
	UCFL313	65	75	295	240	33	25	58	31	175	78	30	M27
70	**UCFL214**	70	74,6	265	216	31	22	54	23	160	75,4	30,2	M20
	UCFL314	70	78	315	250	36	28	61	35	185	81	33	M20
75	**UCFL215**	75	77,8	275	225	34	22	56	23	165	78,5	33,3	M20
	UCFL315	75	82	320	260	39	30	66	35	195	89	32	M30
80	**UCFL216**	80	82,6	290	233	34	22	58	25	180	83,3	33,3	M22
	UCFL316	80	86	355	285	38	32	68	38	210	90	34	M33
85	**UCFL217**	85	85,7	305	248	36	24	63	25	190	87,6	34,1	M22
	UCFL317	85	96	370	300	44	32	74	38	220	100	40	M33
90	**UCFL218**	90	96	320	265	40	24	68	25	205	96,3	39,7	M22
	UCFL318	90	96	385	315	44	36	76	38	235	100	40	M33
95	**UCFL319**	95	103	405	330	59	40	94	41	250	121	41	M36

- warehouse - order - phone

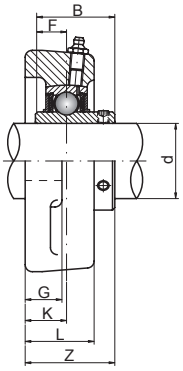

Weight [kg]	Composition		Basic makes*	Equivalent	Unit No.
	bearing	housing	-		
0,45	UC201	FL204		OFB201	**UCFL201**
0,44	UC202	FL204		OFB202	**UCFL202**
0,43	UC203	FL204		OFB203	**UCFL203**
0,41	UC204	FL204		OFB204	**UCFL204**
0,58	UC205	FL205		OFB205	**UCFL205**
1	UCX05	FLX05		-	**UCFLX05**
1,1	UC305	FL305		-	**UCFL305**
0,86	UC206	FL206		OFB206	**UCFL206**
1,5	UCX06	FLX06		-	**UCFLX06**
1,5	UC306	FL306		-	**UCFL306**
1,08	UC207	FL207		OFB207	**UCFL207**
2	UCX07	FLX07		-	**UCFLX07**
1,9	UC307	FL307		-	**UCFL307**
1,44	UC208	FL208		OFB208	**UCFL208**
2,2	UCX08	FLX08		-	**UCFLX08**
2,5	UC308	FL308		-	**UCFL308**
1,74	UC209	FL209		OFB209	**UCFL209**
2,4	UCX09	FLX09		-	**UCFLX09**
3,4	UC309	FL309		-	**UCFL309**
2,1	UC210	FL210		OFB210	**UCFL210**
3,4	UCX10	FLX10		-	**UCFLX10**
4,4	UC310	FL310		-	**UCFL310**
2,91	UC211	FL211		OFB211	**UCFL211**
5,1	UC311	FL311		-	**UCFL311**
3,74	UC212	FL212		OFB212	**UCFL212**
6,1	UC312	FL312		-	**UCFL312**
4,57	UC213	FL213		OFB213	**UCFL213**
7,8	UC313	FL313		-	**UCFL313**
5,11	UC214	FL214		OFB214	**UCFL214**
9	UC314	FL314		-	**UCFL314**
5,37	UC215	FL215		OFB215	**UCFL215**
10	UC315	FL315		-	**UCFL315**
7,2	UC216	FL216		OFB216	**UCFL216**
13	UC316	FL316		-	**UCFL316**
8,61	UC217	FL217		OFB217	**UCFL217**
15	UC317	FL317		-	**UCFL317**
10,51	UC218	FL218		OFB218	**UCFL218**
18	UC318	FL318		-	**UCFL318**
22	UC319	FL319		-	**UCFL319**

* Other products also available

https://nppnovoteh.com

15. BEARING UNITS AND BEARING HOUSINGS

15.5. Cast-iron bearings units with insert ball bearings – type – UCFC

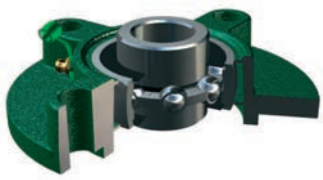

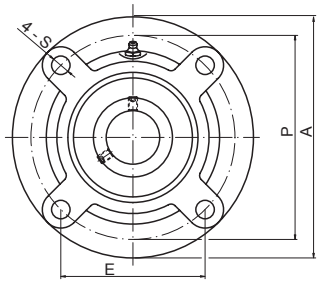

UCFC..

12 – 90 mm

Shaft [mm]	Unit No.	Dimensions [mm]													
		d	A	P	E	C	S	J	K	G	D	Z	B	F	bolt size
12	**UCFC201**	12	100	78	55,1	10	12	5	7	20,5	62	28,3	31	12,7	M10
15	**UCFC202**	15	100	78	55,1	10	12	5	7	20,5	62	28,3	31	12,7	M10
17	**UCFC203**	17	100	78	55,1	10	12	5	7	20,5	62	28,3	31	12,7	M10
20	**UCFC204**	20	100	78	55,1	10	12	5	7	20,5	62	28,3	31	12,7	M10
25	**UCFC205**	25	115	90	63,6	10	12	6	7	21	70	29,8	34,1	14,3	M10
	UCFCX05	25	111	92	65	10	9,5	6	9,5	24	76	32,2	38,1	15,9	M8
30	**UCFC206**	30	125	100	70,7	10	12	8	8	23	80	32,2	38,1	15,9	M10
	UCFCX06	30	127	105	74,2	8	12	9,5	9,5	22,5	85	33,4	42,9	17,5	M10
35	**UCFC207**	35	135	110	77,8	11	14	8	9	26	90	36,4	42,9	17,5	M12
	UCFCX07	35	133	111	78,5	9	12	11	11	26	92	39,2	49,2	19	M10
40	**UCFC208**	40	145	120	84,8	11	14	10	9	26	100	41,2	49,2	19	M12
	UCFCX08	40	133	111	78,5	9	12	11	11	26	92	39,2	49,2	19	M10
45	**UCFC209**	45	160	132	93,3	10	16	12	14	26	105	40,2	49,2	19	M14
	UCFCX09	45	155	130	91,9	8	14	12	11	25	108	40,6	51,6	19	M12
50	**UCFC210**	50	165	138	97,6	10	16	12	14	28	110	42,6	51,6	19	M14
	UCFCX10	50	162	136	96,2	7	14	16	11	25	118	40,4	55,6	22,2	M12
55	**UCFC211**	55	185	150	106,1	13	19	12	15	31	125	46,4	55,6	22,2	M16
	UCFCX11	55	180	152	107,5	4	16	22	13	26	127	43,7	65,1	25,4	M14
60	**UCFC212**	60	195	160	113,1	17	19	12	15	36	135	56,7	65,1	25,4	M16
	UCFCX12	60	194	165	116,7	11	16	20	14	33	140	50,7	65,1	25,4	M14
65	**UCFC213**	65	205	170	120,2	16	19	14	15	36	145	55,7	65,1	25,4	M16
	UCFCX13	65	194	165	116,7	11	16	20	14	33	140	55,4	74,6	30,2	M14
70	**UCFC214**	70	215	177	125,1	17	19	14	18	40	150	61,4	74,6	30,2	M16
	UCFCX14	70	222	190	134,3	14	19	20	14	36	164	58,5	77,8	33,3	M16
75	**UCFC215**	75	220	184	130,1	18	19	16	18	40	160	62,5	77,8	33,3	M16
	UCFCX15	75	222	190	134,3	12	19	22	16	35	164	61,3	82,6	33,3	M16
80	**UCFC216**	80	240	200	141,4	18	23	16	18	42	170	67,3	82,6	33,3	M20
	UCFCX16	80	260	219	154,8	10	23	25	19	36	186	61,6	85,7	34,1	M20
85	**UCFC217**	85	250	208	147,1	18	23	18	20	45	180	69,6	85,7	34,1	M20
	UCFCX17	85	260	219	154,8	10	23	25	19	36	186	66,3	96	39,7	M20
90	**UCFC218**	90	265	220	155,5	22	23	18	20	50	190	78,3	96	39,7	M20

- warehouse - order - phone

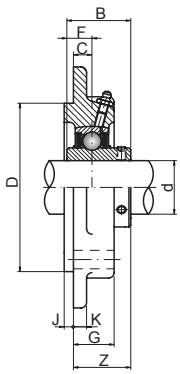

Weight [kg]	Composition		Basic makes*	Unit No.
	bearing	housing	-	
0,73	UC201	FC204		**UCFC201**
0,72	UC202	FC204		**UCFC202**
0,71	UC203	FC204		**UCFC203**
0,69	UC204	FC204		**UCFC204**
1	UC205	FC205		**UCFC205**
1,2	UCX05	FCX05		**UCFCX05**
1,3	UC206	FC206		**UCFC206**
1,5	UCX06	FCX06		**UCFCX06**
1,81	UC207	FC207		**UCFC207**
1,9	UCX07	FCX07		**UCFCX07**
2,14	UC208	FC208		**UCFC208**
2	UCX08	FCX08		**UCFCX08**
2,68	UC209	FC209		**UCFC209**
2,6	UCX09	FCX09		**UCFCX09**
2,9	UC210	FC210		**UCFC210**
3,2	UCX10	FCX10		**UCFCX10**
4,01	UC211	FC211		**UCFC211**
4,3	UCX11	FCX11		**UCFCX11**
4,94	UC212	FC212		**UCFC212**
5,3	UCX12	FCX12		**UCFCX12**
5,65	UC213	FC213		**UCFC213**
5,7	UCX13	FCX13		**UCFCX13**
6,95	UC214	FC214		**UCFC214**
7,3	UCX14	FCX14		**UCFCX14**
7,56	UC215	FC215		**UCFC215**
8	UCX15	FCX15		**UCFCX15**
9,15	UC216	FC216		**UCFC216**
11,3	UCX16	FCX16		**UCFCX16**
10,81	UC217	FC217		**UCFC217**
12,9	UCX17	FCX17		**UCFCX17**
12,96	UC218	FC218		**UCFC218**

*Other units available

https://nppnovoteh.com

15. BEARING UNITS AND BEARING HOUSINGS

15.6. Cast-iron bearings units with insert ball bearings – type – UCT



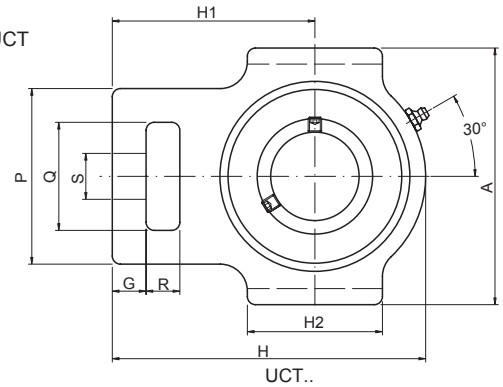

UCT..

12 – 80 mm

Shaft [mm]	Unit No.	Dimensions [mm]																
		d	R	G	P	Q	S	H2	K	E	A	H	J	L	H1	B	F
12	**UCT201**	12	16	10	51	32	19	51	12	76	89	94	32	24	61	31	12,7
15	**UCT202**	15	16	10	51	32	19	51	12	76	89	94	32	24	61	31	12,7
17	**UCT203**	17	16	10	51	32	19	51	12	76	89	94	32	24	61	31	12,7
20	**UCT204**	20	16	10	51	32	19	51	12	76	89	94	32	24	61	31	12,7
25	**UCT205**	25	16	10	51	32	19	51	12	76	89	97	32	24	62	34,1	14,3
	UCTX05	25	16	12	56	37	22	57	12	89	102	113	37	28	70	38,1	15,9
	UCT305	25	16	14	62	36	26	65	12	80	89	122	36	26	76	38	15
30	**UCT206**	30	16	10	56	37	22	57	12	89	102	113	37	28	70	38,1	15,9
	UCTX06	30	16	15	64	37	22	64	12	89	102	129	37	30	78	42,9	17,5
	UCT306	30	18	16	70	41	28	74	16	90	100	137	41	28	85	43	17
35	**UCT207**	35	16	13	64	37	22	64	12	89	102	129	37	30	78	42,9	17,5
	UCTX07	35	19	17	83	49	29	83	16	102	114	144	49	36	88	49,2	19
	UCT307	35	20	17	75	45	30	80	16	100	111	150	45	32	94	48	19
40	**UCT208**	40	19	16	83	49	29	83	16	102	114	144	49	35	89	49,2	19
	UCTX08	40	19	17	83	49	29	83	16	102	117	144	49	36	87	49,2	19
	UCT308	40	22	19	83	50	32	89	18	112	124	162	50	34	100	52	19
45	**UCT209**	45	19	16	83	49	29	83	16	102	117	144	49	35	87	49,2	19
	UCTX09	45	19	18	83	49	29	86	16	102	117	151	49	38	92	51,6	19
	UCT309	45	24	20	90	55	34	97	18	125	138	178	55	38	110	57	22
50	**UCT210**	50	19	16	83	49	29	86	16	102	117	149	49	35	90	51,6	19
	UCTX10	50	25	21	102	64	35	95	22	130	146	171	64	42	106	55,6	22,2
	UCT310	50	27	22	98	61	37	106	20	140	151	192	61	40	118	61	22
55	**UCT211**	55	25	19	102	64	35	95	22	130	146	171	64	41	106	55,6	22,2
	UCTX11	55	32	21	102	64	35	102	22	130	146	194	64	44	119	65,1	25,4
	UCT311	55	29	23	105	66	39	115	22	150	163	207	66	44	127	66	25
60	**UCT212**	60	32	19	102	64	35	102	22	130	146	194	64	46	119	65,1	25,4
	UCTX12	60	32	23	111	70	41	121	26	151	167	224	70	48	137	65,1	25,4
	UCT312	60	31	25	113	71	41	123	22	160	178	220	71	46	135	71	26
65	**UCT213**	65	32	21	111	70	41	121	26	151	167	224	70	51	137	65,1	25,4
	UCTX13	65	32	23	111	70	41	121	26	151	167	224	70	48	137	74,6	30,2
	UCT313	65	32	27	116	70	43	134	26	170	190	238	80	50	146	75	30
70	**UCT214**	70	32	21	111	70	41	121	26	151	167	224	70	46	137	74,6	30,2
	UCTX14	70	32	23	111	70	41	121	26	151	167	232	70	48	140	77,8	33,3
	UCT314	70	36	27	130	85	46	140	26	180	202	252	90	52	155	78	33
75	**UCT215**	75	32	21	111	70	41	121	26	151	167	232	70	48	140	77,8	33,3
	UCTX15	75	32	23	111	70	41	121	28	165	184	235	70	48	140	82,6	33,3
	UCT315	75	36	27	132	85	46	150	26	192	216	262	90	55	160	82	32
80	**UCT216**	80	32	21	111	70	41	121	26	165	184	235	70	51	140	82,6	33,3
	UCTX16	80	38	30	124	73	48	157	28	173	198	260	73	54	162	85,7	34,1
	UCT316	80	42	30	150	98	53	160	30	204	230	282	102	60	174	86	34

- warehouse - order - phone

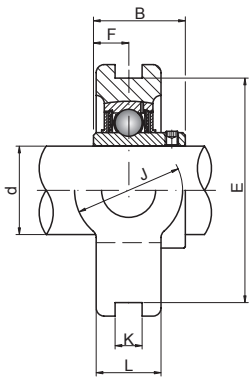

Weight [kg]	Composition		Basic makes*	Equivalent	Unit No.
	bearing	housing	-		
0,8	UC201	T204		NFB201	**UCT201**
0,79	UC202	T204		NFB202	**UCT202**
0,78	UC203	T204		NFB203	**UCT203**
0,76	UC204	T204		NFB204	**UCT204**
0,81	UC205	T205		NFB205	**UCT205**
1,4	UCX05	TX05		-	**UCTX05**
1,4	UC305	T305		-	**UCT305**
1,22	UC206	T206		NFB206	**UCT206**
1,8	UCX06	TX06		-	**UCTX06**
1,8	UC306	T306		-	**UCT306**
1,44	UC207	T207		NFB207	**UCT207**
2,6	UCX07	TX07		-	**UCTX07**
2,4	UC307	T307		-	**UCT307**
2,4	UC208	T208		NFB208	**UCT208**
2,6	UCX08	TX08		-	**UCTX08**
3	UC308	T308		-	**UCT308**
2,36	UC209	T209		NFB209	**UCT209**
2,8	UCX09	TX09		-	**UCTX09**
4	UC309	T309		-	**UCT309**
2,43	UC210	T210		NFB210	**UCT210**
4,3	UCX10	TX10		-	**UCTX10**
5	UC310	T310		-	**UCT310**
4,11	UC211	T211		NFB211	**UCT211**
5,2	UCX11	TX11		-	**UCTX11**
6,4	UC311	T311		-	**UCT311**
4,97	UC212	T212		NFB212	**UCT212**
7,6	UCX12	TX12		-	**UCTX12**
7,6	UC312	T312		-	**UCT312**
6,65	UC213	T213		NFB213	**UCT213**
7,6	UCX13	TX13		-	**UCTX13**
9,7	UC313	T313		-	**UCT313**
7,05	UC214	T214		NFB214	**UCT214**
7,7	UCX14	TX14		-	**UCTX14**
11	UC314	T314		-	**UCT314**
7,41	UC215	T215		NFB215	**UCT215**
7,55	UCX15	TX15		-	**UCTX15**
14	UC315	T315		-	**UCT315**
8,3	UC216	T216		NFB216	**UCT216**
11	UCX16	TX16		-	**UCTX16**
16	UC316	T316		-	**UCT316**

* Other products also available



https://nppnovoteh.com

15. BEARING UNITS AND BEARING HOUSINGS

15.6. Cast-iron bearings units with insert ball bearings – type – UCT



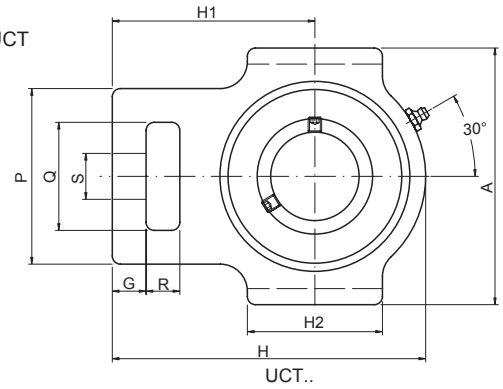

85 – 95 mm

Shaft [mm]	Unit No.	Dimensions [mm]															
		d	R	G	P	Q	S	H2	K	E	A	H	J	L	H1	B	F
85	**UCT217**	85	38	29	124	73	48	157	30	173	198	260	73	54	162	85,7	34,1
	UCTX17	85	38	30	124	73	48	157	28	173	198	260	73	54	162	96	39,7
	UCT317	85	42	32	152	98	53	170	32	214	240	298	102	64	183	96	40
90	**UCT318**	90	46	32	160	106	57	175	32	228	255	312	110	66	192	96	40
95	**UCT319**	95	46	33	165	103	57	180	35	240	270	322	110	72	197	103	41

- warehouse - order - phone

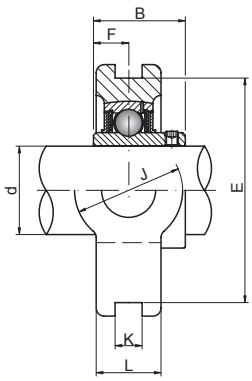

Weight [kg]	Composition		Basic makes*	Equivalent	Unit No.
	bearing	housing	-		
11	UC217	T217		NFB217	**UCT217**
12	UCX17	TX17		-	**UCTX17**
20	UC317	T317		-	**UCT317**
22	UC318	T318		-	**UCT318**
24	UC319	T319		-	**UCT319**

* Other products also available



https://nppnovoteh.com

15. BEARING UNITS AND BEARING HOUSINGS

15.7. Cast-iron bearings units with insert ball bearings – type – UKP



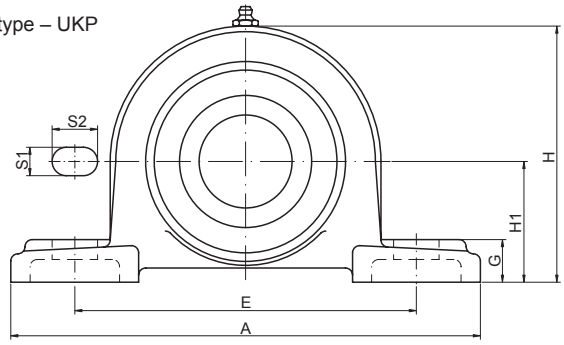

UKP..

20 – 80 mm

Shaft [mm]	Unit No.	Dimensions [mm]										
		d	H1	A	E	P	S1	S2	G	H	B	bolt size
20	**UKP205**	20	36,5	140	105	38	13	19	15	71	35	M10
25	**UKP206**	25	42,9	165	121	48	17	20	17	84	38	M14
30	**UKP207**	30	47,6	167	127	48	17	20	18	93	43	M14
35	**UKP208**	35	49,2	184	137	54	17	20	18	100	46	M14
40	**UKP209**	40	54	190	146	54	17	20	20	106	50	M14
45	**UKP210**	45	57,2	206	159	60	20	23	21	113	55	M16
50	**UKP211**	50	63,5	219	171	60	20	23	23	125	59	M16
55	**UKP212**	55	69,8	241	184	70	20	23	25	138	62	M16
60	**UKP213**	60	76,2	265	203	70	25	28	27	150	65	M20
65	**UKP215**	65	82,6	275	217	74	25	28	28	162	73	M20
70	**UKP216**	70	88,9	292	232	78	25	28	30	174	78	M20
75	**UKP217**	75	95,2	310	247	83	25	28	32	185	82	M20
80	**UKP218**	80	101,6	327	262	88	27	30	33	198	86	M22

- warehouse - order - phone

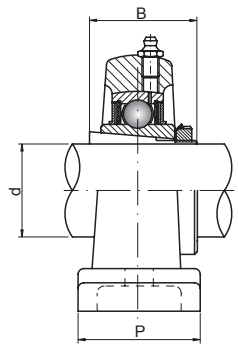

Weight [kg]	Composition			Basic makes*	Unit No.
	bearing	sleeve	housing	-	
0,86	UK205	H2305	P205	◴	**UKP205**
1,28	UK206	H2306	P206	◴	**UKP206**
1,67	UK207	H2307	P207	◴	**UKP207**
1,99	UK208	H2308	P208	◴	**UKP208**
1,29	UK209	H2309	P209	◴	**UKP209**
2,83	UK210	H2310	P210	◴	**UKP210**
3,46	UK211	H2311	P211	◴	**UKP211**
4,95	UK212	H2312	P212	◴	**UKP212**
5,06	UK213	H2313	P213	◴	**UKP213**
7,27	UK215	H2315	P215	◴	**UKP215**
8,36	UK216	H2316	P216	◴	**UKP216**
10,23	UK217	H2317	P217	◴	**UKP217**
12,34	UK218	H2318	P218	◴	**UKP218**

* Other products also available



https://nppnovoteh.com

15. BEARING UNITS AND BEARING HOUSINGS

15.8. Cast-iron bearings units with insert ball bearings – type – UKF



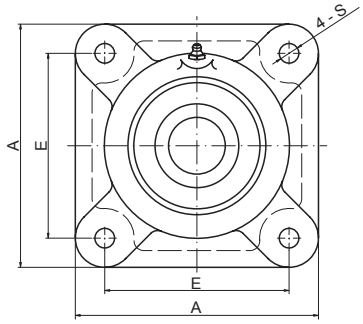

UKF..

20 – 80 mm

Shaft [mm]	Unit No.	Dimensions [mm]									
		d	A	E	F	G	L	S	Z	B	bolt size
20	**UKF205**	20	95	70	16	14	27	12	35,5	35	M10
25	**UKF206**	25	108	83	18	14	31	12	39	38	M10
30	**UKF207**	30	117	92	19	16	34	14	42,5	43	M12
35	**UKF208**	35	130	102	21	16	36	16	46,5	46	M14
40	**UKF209**	40	137	105	22	18	38	16	48,5	50	M14
45	**UKF210**	45	143	111	22	18	40	16	50	55	M14
50	**UKF211**	50	162	130	25	20	43	19	54,5	59	M16
55	**UKF212**	55	175	143	29	20	48	19	61	62	M16
60	**UKF213**	60	187	149	30	22	50	19	64	65	M16
65	**UKF215**	65	200	159	34	22	56	19	71	73	M16
70	**UKF216**	70	208	165	34	22	58	23	73,5	78	M20
75	**UKF217**	75	220	175	36	24	63	23	77	82	M20
80	**UKF218**	80	235	187	40	24	68	23	81,5	86	M20

- warehouse - order - phone

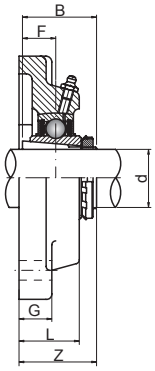

Weight [kg]	Composition			Basic makes*	Unit No.
	bearing	sleeve	housing	-	
0,85	UK205	H2305	F205	◴	**UKF205**
1,16	UK206	H2306	F206	◴	**UKF206**
1,55	UK207	H2307	F207	◴	**UKF207**
1,94	UK208	H2308	F208	◴	**UKF208**
2,3	UK209	H2309	F209	◴	**UKF209**
2,59	UK210	H2310	F210	◴	**UKF210**
3,46	UK211	H2311	F211	◴	**UKF211**
4,33	UK212	H2312	F212	◴	**UKF212**
4,9	UK213	H2313	F213	◴	**UKF213**
7,02	UK215	H2315	F215	◴	**UKF215**
7,76	UK216	H2316	F216	◴	**UKF216**
10,08	UK217	H2317	F217	◴	**UKF217**
12,44	UK218	H2318	F218	◴	**UKF218**

* Other products also available



https://nppnovoteh.com

15. BEARING UNITS AND BEARING HOUSINGS

15.9. Cast-iron bearings units with insert ball bearings – type – UKFL



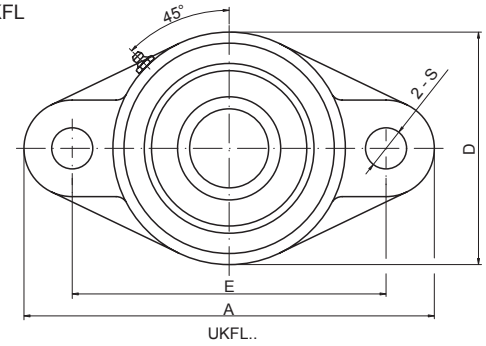

20 – 80 mm

Shaft [mm]	Unit No.	Dimensions [mm]										
		d	A	E	F	G	L	S	D	Z	B	bolt size
20	**UKFL205**	20	130	99	16	13	27	16	68	35,5	35	M14
25	**UKFL206**	25	148	117	18	13	31	16	80	39	38	M14
30	**UKFL207**	30	161	130	19	14	34	16	90	42,5	43	M14
35	**UKFL208**	35	175	144	21	14	36	16	100	46,5	46	M14
40	**UKFL209**	40	188	148	22	15	38	19	108	48,5	50	M16
45	**UKFL210**	45	197	157	22	15	40	19	115	50	55	M16
50	**UKFL211**	50	224	184	25	18	43	19	130	54,5	59	M16
55	**UKFL212**	55	250	202	29	18	48	23	140	61	62	M20
60	**UKFL213**	60	258	210	30	22	50	23	155	64	65	M20
65	**UKFL215**	65	275	225	34	22	56	23	165	71	73	M20
70	**UKFL216**	70	290	233	34	22	58	25	180	73,5	78	M22
75	**UKFL217**	75	305	248	36	24	63	25	190	77	82	M22
80	**UKFL218**	80	320	265	40	24	68	25	205	81,5	86	M22

- warehouse - order - phone

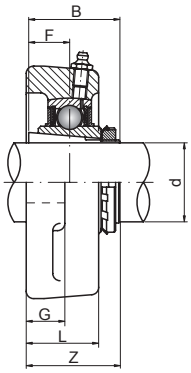

Weight [kg]	Composition			Basic makes*	Unit No.
	bearing	sleeve	housing	-	
0,63	UK205	H2305	FL205	◴	**UKFL205**
0,9	UK206	H2306	FL206	◴	**UKFL206**
1,17	UK207	H2307	FL207	◴	**UKFL207**
1,54	UK208	H2308	FL208	◴	**UKFL208**
1,89	UK209	H2309	FL209	◴	**UKFL209**
2,27	UK210	H2310	FL210	◴	**UKFL210**
3,06	UK211	H2311	FL211	◴	**UKFL211**
3,79	UK212	H2312	FL212	◴	**UKFL212**
4,48	UK213	H2313	FL213	◴	**UKFL213**
5,48	UK215	H2315	FL215	◴	**UKFL215**
7,46	UK216	H2316	FL216	◴	**UKFL216**
9,03	UK217	H2317	FL217	◴	**UKFL217**
10,89	UK218	H2318	FL218	◴	**UKFL218**

* Other products also available



https://nppnovoteh.com

15. BEARING UNITS AND BEARING HOUSINGS

15.10. Cast-iron bearings units with insert ball bearings – type – UKFC

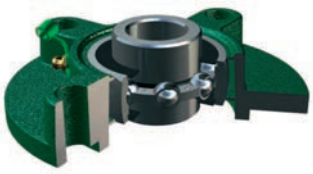

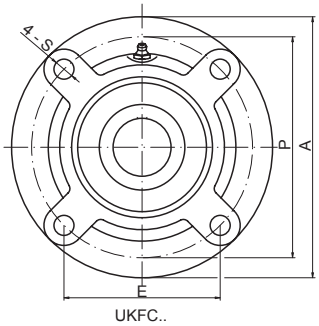

UKFC..

20 – 80 mm

Shaft [mm]	Unit No.	Dimensions [mm]												
		d	A	P	E	F	S	J	K	G	D	Z	B	bolt size
20	**UKFC205**	20	115	90	63,6	10	12	6	7	21	70	29,5	35	M10
25	**UKFC206**	25	125	100	70,7	10	12	8	8	23	80	31	38	M10
30	**UKFC207**	30	135	110	77,8	11	14	8	9	26	90	33,5	43	M12
35	**UKFC208**	35	145	120	84,8	11	14	10	9	26	100	35,5	46	M12
40	**UKFC209**	40	160	132	93,3	10	16	12	14	26	105	36	50	M14
45	**UKFC210**	45	165	138	97,6	10	16	12	14	28	110	37,5	55	M14
50	**UKFC211**	50	185	150	106,1	13	19	12	15	31	125	41,5	59	M16
55	**UKFC212**	55	195	160	113,1	17	19	12	15	36	135	48	62	M16
60	**UKFC213**	60	205	170	120,2	16	19	14	15	36	145	49	65	M16
65	**UKFC215**	65	220	184	130,1	18	19	16	18	40	160	53,5	73	M16
70	**UKFC216**	70	240	200	141,4	18	23	16	18	42	170	57	78	M20
75	**UKFC217**	75	250	208	147,1	18	23	18	20	45	180	59	82	M20
80	**UKFC218**	80	265	220	155,5	22	23	18	20	50	190	64,5	86	M20

- warehouse - order - phone

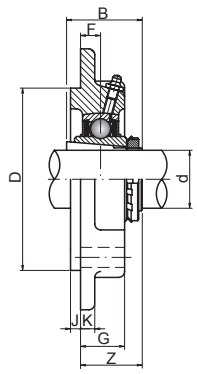

Weight [kg]	Composition			Basic makes*	Unit No.
	bearing	sleeve	housing	-	
1,05	UK205	H2305	FC205	◴	**UKFC205**
1,34	UK206	H2306	FC206	◴	**UKFC206**
1,9	UK207	H2307	FC207	◴	**UKFC207**
2,24	UK208	H2308	FC208	◴	**UKFC208**
2,83	UK209	H2309	FC209	◴	**UKFC209**
3,07	UK210	H2310	FC210	◴	**UKFC210**
4,16	UK211	H2311	FC211	◴	**UKFC211**
4,99	UK212	H2312	FC212	◴	**UKFC212**
5,56	UK213	H2313	FC213	◴	**UKFC213**
7,67	UK215	H2315	FC215	◴	**UKFC215**
9,41	UK216	H2316	FC216	◴	**UKFC216**
11,23	UK217	H2317	FC217	◴	**UKFC217**
13,34	UK218	H2318	FC218	◴	**UKFC218**

* Other products also available



https://nppnovoteh.com

15. BEARING UNITS AND BEARING HOUSINGS

15.11. Cast-iron bearings units with insert ball bearings – type – UKT



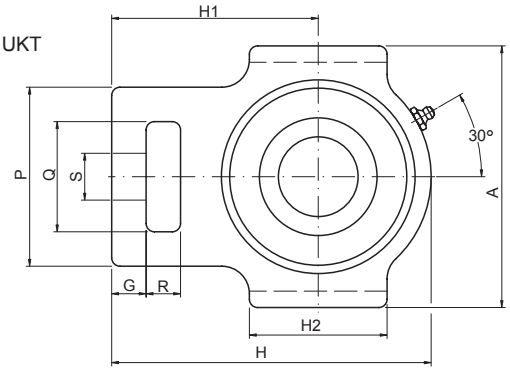

20 – 75 mm

Shaft [mm]	Unit No.	Dimensions [mm]														
		d	B	A	P	E	H	H1	H2	G	K	L	R	Q	J	S
20	**UKT205**	20	35	89	51	76	97	62	51	10	12	24	16	32	32	19
25	**UKT206**	25	38	102	56	89	113	70	57	10	12	28	16	37	37	22
30	**UKT207**	30	43	102	64	89	129	78	64	13	12	30	16	37	37	22
35	**UKT208**	35	46	114	83	102	144	89	83	16	16	35	19	49	49	29
40	**UKT209**	40	50	117	83	102	144	87	83	16	16	35	19	49	49	29
45	**UKT210**	45	55	117	83	102	149	90	86	16	16	35	19	49	49	29
50	**UKT211**	50	59	146	102	130	171	106	95	19	22	41	25	64	64	35
55	**UKT212**	55	62	146	102	130	194	119	102	19	22	46	32	64	64	35
60	**UKT213**	60	65	167	111	151	224	137	121	21	26	51	32	70	70	41
65	**UKT215**	65	73	167	111	151	232	140	121	21	26	48	32	70	70	41
70	**UKT216**	70	78	184	111	165	235	140	121	21	26	51	32	70	70	41
75	**UKT217**	75	82	198	124	173	260	162	157	29	30	54	38	73	73	48

- warehouse - order - phone

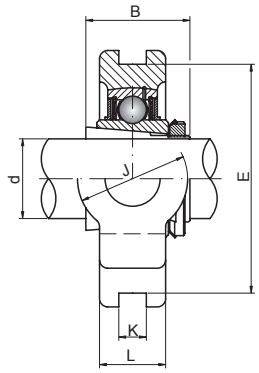

Weight [kg]	Composition			Basic makes*	Unit No.
	bearing	sleeve	housing	-	
0,86	UK205	H2305	T205	◴	**UKT205**
1,26	UK206	H2306	T206	◴	**UKT206**
2,5	UK207	H2307	T207	◴	**UKT207**
2,5	UK208	H2308	T208	◴	**UKT208**
2,51	UK209	H2309	T209	◴	**UKT209**
2,6	UK210	H2310	T210	◴	**UKT210**
4,26	UK211	H2311	T211	◴	**UKT211**
5,02	UK212	H2312	T212	◴	**UKT212**
6,56	UK213	H2313	T213	◴	**UKT213**
7,52	UK215	H2315	T215	◴	**UKT215**
8,56	UK216	H2316	T216	◴	**UKT216**
11,38	UK217	H2317	T217	◴	**UKT217**

* Other products also available



https://nppnovoteh.com

15. BEARING UNITS AND BEARING HOUSINGS

15.12. Split bearing housings for spherical roller and self aligning bearings – type SN



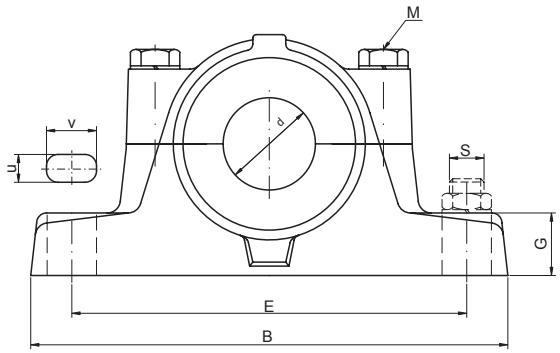

SN..

Unit No.	Dimensions [mm]													
	d	D	B	b	G	F	A	L	H	E	bolt size	u	v	S
SN505	20	52	165	46	22	25	40	67	75	130	M8	15	20	M12
SN605	20	62	185	52	22	34	50	80	90	150	M8	16	20	M12
SN506	25	62	185	52	22	30	50	77	90	150	M8	15	20	M12
SN606	25	72	185	52	22	37	50	82	95	150	M10	16	20	M12
SN507	30	72	185	52	22	33	50	82	95	150	M10	15	20	M12
SN607	30	80	205	60	25	41	60	90	110	170	M10	16	20	M12
SN508	35	80	205	60	25	33	60	85	110	170	M10	15	20	M12
SN608	35	90	205	60	25	43	60	95	115	170	M10	15	24	M12
SN509	40	85	205	60	25	31	60	85	112	170	M10	15	20	M12
SN609	40	100	255	70	28	46	70	105	130	210	M12	19	25	M16
SN510	45	90	205	60	25	33	60	90	115	170	M10	15	20	M12
SN610	45	110	255	70	30	50	70	115	135	210	M12	18	23	M16
SN511	50	100	255	70	28	33	70	95	130	210	M12	18	23	M16
SN611	50	120	275	80	30	53	80	120	150	230	M12	20	28	M16
SN512	55	110	255	70	30	38	70	105	135	210	M12	18	23	M16
SN612	55	130	280	80	30	56	80	125	155	230	M12	20	28	M16
SN513	60	120	275	80	30	43	80	110	150	230	M12	18	23	M16
SN613	60	140	315	90	32	58	95	130	175	260	M16	22	30	M20
SN515	65	130	280	80	30	41	80	115	155	230	M12	18	23	M16
SN615	65	160	345	100	35	65	100	140	195	290	M16	23	28	M20
SN516	70	140	315	90	32	43	95	120	175	260	M16	22	27	M20
SN616	70	170	345	100	35	68	112	145	212	290	M16	23	30	M20
SN517	75	150	320	90	32	46	95	125	185	260	M16	22	27	M20
SN617	75	180	380	110	40	70	112	155	218	320	M20	26	35	M24
SN518	80	160	345	100	35	62,4	100	145	195	290	M16	22	27	M20
SN618	80	190	400	110	33	74	112	160	230	320	M20	27	38	M24
SN519	85	170	345	100	35	53	112	140	210	290	M16	22	28	M20
SN619	85	200	420	120	36	77	125	170	245	350	M20	28	36	M24
SN520	90	180	380	110	40	70,3	112	160	218	320	M20	26	32	M24
SN620	90	215	420	120	38	83	140	175	280	350	M20	27	33	M24
SN522	100	200	410	120	45	80	125	175	240	350	M20	26	32	M24
SN622	100	240	460	130	40	90	150	190	300	390	M20	28	32	M24
SN524	110	215	410	120	45	86	140	185	270	350	M20	26	34	M24
SN624	110	260	540	160	50	96	160	205	325	450	M24	34	42	M30
SN526	115	230	445	130	50	90	150	190	290	380	M24	28	35	M24
SN626	115	280	560	160	50	103	170	215	350	470	M24	34	42	M30
SN528	125	250	500	150	50	98	150	205	305	420	M24	34	44	M30
SN628	125	300	630	170	55	112	180	235	375	520	M30	34	46	M30
SN530	135	270	530	160	60	106	160	220	325	450	M24	34	42	M30
SN630	135	320	680	180	55	118	190	245	395	560	M30	38	44	M30
SN532	140	290	550	160	60	114	170	235	345	470	M24	32	44	M30
SN632	140	340	710	190	60	124	200	255	415	580	M30	40	52	M36

- warehouse - order - phone

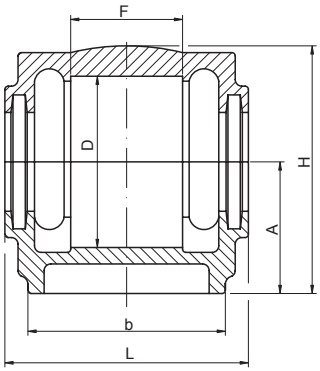

Weight [kg]	Equivalent	Basic makes*	Unit No.
		-	
1,5	SNH505 TC		**SN505**
2,11	SNH605 TC		**SN605**
1,74	SNH506 TC		**SN506**
2,09	SNH606 TC		**SN606**
1,9	SNH507 TC		**SN507**
3,4	SNH607 TC		**SN607**
2,63	SNH508 TC		**SN508**
3,6	SNH608 TC		**SN608**
2,64	SNH509 TC		**SN509**
5,3	SNH609 TC		**SN609**
2,8	SNH510 TC		**SN510**
5,5	SNH610 TC		**SN610**
4,32	SNH511 TC		**SN511**
6,9	SNH611 TC		**SN611**
4,99	SNH512 TC		**SN512**
8,8	SNH612 TC		**SN612**
5,64	SNH513 TC		**SN513**
9,8	SNH613 TC		**SN613**
6,19	SNH515 TC		**SN515**
13	SNH615 TC		**SN615**
8,17	SNH516 TC		**SN516**
15,5	SNH616 TC		**SN616**
9,37	SNH517 TC		**SN517**
16,3	SNH617 TC		**SN617**
11,5	SNH518 TC		**SN518**
20	SNH618 TC		**SN618**
13,5	SNH519 TC		**SN519**
28	SNH619 TC		**SN619**
16,3	SNH520 TC		**SN520**
30,5	SNH620 TC		**SN620**
25,1	SNH522 TC		**SN522**
42	SNH622 TC		**SN622**
72,2	SNH524 TC		**SN524**
59	SNH624 TC		**SN624**
35,2	SNH526 TC		**SN526**
61,5	SNH626 TC		**SN626**
43,7	SNH528 TC		**SN528**
88	SNH628 TC		**SN628**
45,3	SNH530 TC		**SN530**
89	SNH630 TC		**SN630**
50,75	SNH532 TC		**SN532**
127	SNH632 TC		**SN632**

* Other products also available



https://nppnovoteh.com

15. BEARING UNITS

15.12. Split bearing housings for spherical roller and self aligning bearings – type SN – Application



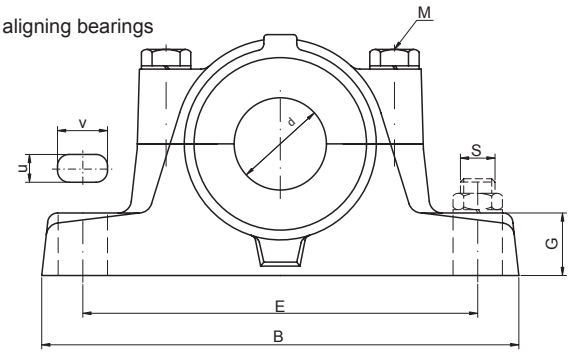

SN..

Unit No.	SELF - ALIGNING BALL BEARINGS							
	bearing	sleeve	retaining ring		bearing	sleeve	retaining ring	
			PU..	pcs			PU..	pcs
SN505	1205 K	H205	52X5	2	2205 K	H305	52X7	1
SN605	1305 K	H305	62X8,5	2	2305 K	H2305	62X10	1
SN506	1206 K	H206	62X7	2	2206 K	H606	62X10	1
SN606	1306 K	H306	72X9	2	2306 K	H2306	72X10	1
SN507	1207 K	H207	72X8	2	2207 K	H307	72X10	1
SN607	1307 K	H307	80X10	2	2307 K	H2307	80X10	1
SN508	1208 K	H208	80X7,5	2	2208 K	H308	80X10	1
SN608	1308 K	H308	90X10	2	2308 K	H2308	90X10	1
SN509	1209 K	H209	85X6	2	2209 K	H309	85X8	1
SN609	1309 K	H309	100X10,5	2	2309 K	H2309	100X10,5	1
SN510	1210 K	H210	90X6,5	2	2210 K	H310	90X10	1
SN610	1310 K	H310	100X11,5	2	2310 K	H2310	110X10	1
SN511	1211 K	H211	100X6	2	2211 K	H311	100X8	1
SN611	1311 K	H311	120X12	2	2311 K	H2311	120X10	1
SN512	1212 K	H212	110X8	2	2212 K	H312	110X10	1
SN612	1312 K	H312	130X12,5	2	2312 K	H2312	130X10	1
SN513	1213 K	H213	120X10	2	2213 K	H313	120X12	1
SN613	1313 K	H313	140X12,5	2	2313 K	H2313	140X10	1
SN515	1215 K	H215	130X8	2	2215 K	H315	130X10	1
SN615	1315 K	H315	160X14	2	2315 K	H2315	160X10	1
SN516	1216 K	H216	140X8,5	2	2216 K	H316	140X10	1
SN616	1316 K	H316	170X14,5	2	2316 K	H2316	170X10	1
SN517	1217 K	H217	150X9	2	2217 K	H317	150X10	1
SN617	1317 K	H317	180X14,5	2	2317 K	H2317	180X10	1
SN518	1218 K	H218	160X16,2	2	2218 K	H318	160X11,2	2
SN618	1318 K	H318	190X15,5	2	2318 K	H2318	190X10	1
SN519	1219 K	H219	170X10,5	2	-	-	-	-
SN619	1319 K	H319	200X16	2	2319 K	H2319	100X10	1
SN520	2220 K	H320	180X12,1	2	-	-	-	-
SN620	1320 K	H320	215X18	2	2320 K	H2320	215X10	1
SN522	2222 K	H322	200X13,5	2	-	-	-	-
SN622	1322 K	H322	240X20	2	2322 K	H2322	240X10	1
SN524	-	-	-	-	-	-	-	-
SN624	-	-	-	-	-	-	-	-
SN526	-	-	-	-	-	-	-	-
SN626	-	-	-	-	-	-	-	-
SN528	-	-	-	-	-	-	-	-
SN628	-	-	-	-	-	-	-	-
SN530	-	-	-	-	-	-	-	-
SN630	-	-	-	-	-	-	-	-
SN532	-	-	-	-	-	-	-	-
SN632	-	-	-	-	-	-	-	-

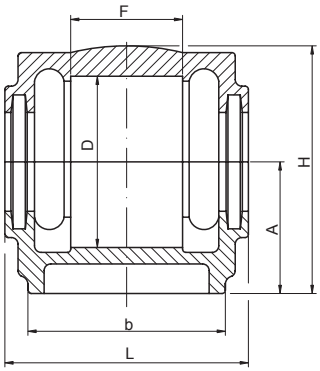

SPHERICAL ROLLER BEARINGS								Unit No.
bearing	sleeve	retaining ring		bearing	sleeve	retaining ring		
		PU..	pcs			PU..	pcs	
22205 K	H305	52X7	1	-	-	-	-	**SN505**
-	-	-	-	-	-	-	-	**SN605**
22206 K	H606	62X10	1	-	-	-	-	**SN506**
-	-	-	-	-	-	-	-	**SN606**
22207 K	H307	72X10	1	-	-	-	-	**SN507**
-	-	-	-	-	-	-	-	**SN607**
22208 K	H308	80X10	1	-	-	-	-	**SN508**
21308 K	H308	90X10	2	22308 K	H2308	90X10	1	**SN608**
22209 K	H309	85X8	1	-	-	-	-	**SN509**
21309 K	H309	100X10,5	2	22309 K	H2309	100X10,5	1	**SN609**
22210 K	H310	90X10	1	-	-	-	-	**SN510**
21310 K	H310	100X11,5	2	22310 K	H2310	110X10	1	**SN610**
22211 K	H311	100X8	1	-	-	-	-	**SN511**
21311 K	H311	120X12	2	22311 K	H2311	120X10	1	**SN611**
22212 K	H312	110X10	1	-	-	-	-	**SN512**
21312 K	H312	130X12,5	2	22312 K	H2312	130X10	1	**SN612**
22213 K	H313	120X12	1	-	-	-	-	**SN513**
21313 K	H313	140X12,5	2	22313 K	H2313	140X10	1	**SN613**
22215 K	H315	130X10	1	-	-	-	-	**SN515**
21315 K	H315	160X14	2	22315 K	H2315	160X10	1	**SN615**
22205 K	H316	140X10	1	-	-	-	-	**SN516**
21316 K	H316	170X14,5	2	22316 K	H2316	170X10	1	**SN616**
22205 K	H317	150X10	1	-	-	-	-	**SN517**
21317 K	H317	180X14,5	2	22317 K	H2317	180X10	1	**SN617**
22218 K	H318	160X11,2	2	-	-	-	-	**SN518**
22318 K	H2318	190X10	1	-	-	-	-	**SN618**
22219 K	H319	170X10	1	-	-	-	-	**SN519**
22319 K	H2319	100X10	1	-	-	-	-	**SN619**
22220 K	H320	180X12,1	2	23220 K	H2320	180X10	1	**SN520**
22320 K	H2320	215X10	1	-	-	-	-	**SN620**
22222 K	H322	200X13,5	2	23222 K	H2322	200X10	1	**SN522**
22322 K	H2322	240X10	1	-	-	-	-	**SN622**
22224 K	H3124	215X14	2	23224 K	H2324	215X10	1	**SN524**
22324 K	H2324	260X10	1	-	-	-	-	**SN624**
22226 K	H3126	230X13	2	23226 K	H2326	230X10	1	**SN526**
22326 K	H2326	280X10	1	-	-	-	-	**SN626**
22228 K	H3128	250X15	2	23228 K	H2328	250X10	1	**SN528**
22328 K	H2328	300X10	1	-	-	-	-	**SN628**
22230 K	H3130	270X16,5	2	23230 K	H2330	270X10	1	**SN530**
22330 K	H2330	320X10	1	-	-	-	-	**SN630**
22232 K	H3132	290X17	2	23232 K	H2332	290X10	1	**SN532**
22322 K	H2332	340X10	1	-	-	-	-	**SN632**



https://nppnovoteh.com

15. BEARING UNITS AND BEARING HOUSINGS

15.13. Split bearing housings for spherical roller and self aligning bearings – type SNU



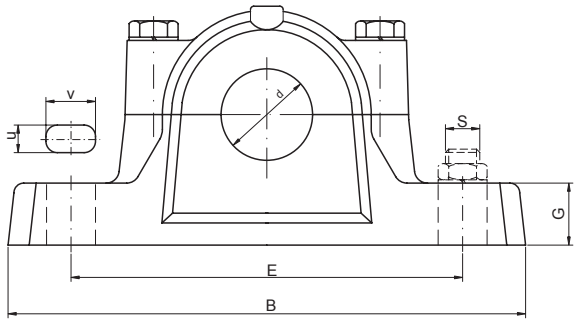

SNU..

Unit No.	Dimensions [mm]															
	d	L	B1	f	F	D	d2	d3	H	A	G	E	B	v	u	S
SNU505	20	67	46	5	25	52	31,5	39,5	72	40	19	130	165	20	13	10
SNU605	20	77	52	5	32	62	36,5	44,5	87	50	22	150	185	22	13	10
SNU506	25	77	52	5	32	62	36,5	44,5	87	50	22	150	185	22	13	10
SNU606	25	82	52	5	34	72	46,5	54,5	92	50	22	150	185	20	13	10
SNU507	30	82	52	5	34	72	46,5	54,5	92	50	22	150	185	20	13	10
SNU607	30	85	60	5	39	80	51,5	59,5	106	60	25	170	205	20	15	12
SNU508	35	85	60	5	39	80	51,5	59,5	106	60	25	170	205	20	15	12
SNU608	35	90	60	5	41	90	62	70,5	112	60	25	170	205	20	15	12
SNU509	40	85	60	5	30	85	56,5	64,5	108	60	25	170	205	20	15	12
SNU609	40	95	70	5	44	100	67	75,5	126	70	28	210	255	23	18	16
SNU510	45	90	60	5	41	90	62	70,5	112	60	25	170	205	20	15	12
SNU610	45	105	70	5	48	110	72	80,5	132	70	30	210	255	23	18	16
SNU511	50	95	70	5	44	100	67	75,5	126	70	28	210	255	23	18	16
SNU611	50	110	80	5	51	120	77	85,5	147	80	30	230	275	24	18	16
SNU512	55	105	70	5	48	110	72	80,5	132	70	30	210	255	23	18	16
SNU612	55	115	80	5	56	130	87	95,5	153	80	30	230	280	26	18	16
SNU513	60	110	80	5	51	120	77	85,5	147	80	30	230	275	24	18	16
SNU613	60	120	90	5	58	140	92,5	101	174	95	32	260	315	29	22	20
SNU515	65	115	80	5	56	130	87	95,5	153	80	30	230	280	26	18	16
SNU615	65	140	100	5	65	160	105	111	190	100	35	290	345	27	22	20
SNU516	70	120	90	5	58	140	92,5	101	174	95	32	260	315	29	22	20
SNU616	70	145	100	6	68	170	131	141	208,5	112	35	290	345	27	22	20
SNU517	75	125	90	5	61	150	97,5	106	180	95	32	260	320	30	22	20
SNU617	75	160	110	6	70	180	137,5	147,5	214,5	112	40	320	380	32	26	24
SNU518	80	140	100	5	65	160	105	111	190	100	35	290	345	27	22	20
SNU519	85	145	100	6	68	170	131	141	208,5	112	35	290	345	27	22	20
SNU619	85	175	120	6	80	200	147,5	157,5	238,5	125	45	350	410	32	26	24
SNU520	90	160	110	6	70	180	137,5	147,5	214,5	112	40	320	380	32	26	24
SNU620	90	185	120	6	86	215	157,5	167,5	271	140	45	350	410	32	26	24
SNU522	100	175	120	6	80	200	147,5	157,5	238,5	125	45	350	410	32	26	24
SNU524	110	185	120	6	86	215	157,5	167,5	271	140	45	350	410	32	26	24
SNU526	115	190	130	6	90	230	167,5	177,5	290	150	50	380	445	35	28	24
SNU528	125	205	150	6	98	250	177,5	187,5	302	150	50	420	500	42	35	30
SNU530	135	220	160	6	106	270	192,5	202,5	323	160	60	450	530	42	25	30
SNU532	140	235	160	6	114	290	202,5	212,5	344	170	60	470	550	42	35	30

- warehouse - order - phone

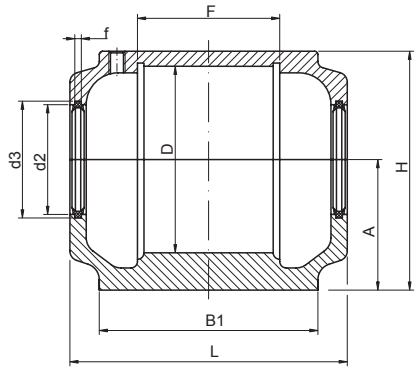

Weight [kg]	Equivalent		Basic makes*	Unit No.
			-	
1,5	SNH505	SNH505 TC		**SNU505**
2	SNH506-605	SNH605 TC		**SNU605**
2	SNH506-605	SNH506 TC		**SNU506**
2,32	SNH507-606	SNH606 TC		**SNU606**
2,32	SNH507-606	SNH507 TC		**SNU507**
2,9	SNH508-607	SNH607 TC		**SNU607**
2,9	SNH508-607	SNH508 TC		**SNU508**
3,31	SNH510-608	SNH608 TC		**SNU608**
3,1	SNH509	SNH509 TC		**SNU509**
4,54	SNH511-609	SNH609 TC		**SNU609**
3,31	SNH510-608	SNH510 TC		**SNU510**
5,47	SNH512-610	SNH610 TC		**SNU610**
4,54	SNH511-609	SNH511 TC		**SNU511**
6,6	SNH513-611	SNH611 TC		**SNU611**
5,47	SNH512-610	SNH512 TC		**SNU512**
7,3	SNH515-612	SNH612 TC		**SNU612**
6,6	SNH513-611	SNH513 TC		**SNU513**
9,95	SNH516-613	SNH613 TC		**SNU613**
7,3	SNH515-612	SNH515 TC		**SNU515**
13,3	SNH518-615	SNH615 TC		**SNU615**
9,95	SNH516-613	SNH516 TC		**SNU516**
15	SNH519-616	SNH616 TC		**SNU616**
10,82	SNH517-614	SNH517 TC		**SNU517**
18,8	SNH520-617	SNH617 TC		**SNU617**
13,3	SNH518-615	SNH518 TC		**SNU518**
15	SNH519-616	SNH519 TC		**SNU519**
23,5	SNH522-619	SNH619 TC		**SNU619**
18,8	SNH520-617	SNH520 TC		**SNU520**
28	SNH524-620	SNH620 TC		**SNU620**
23,5	SNH522-619	SNH522 TC		**SNU522**
28	SNH524-620	SNH524 TC		**SNU524**
34	SNH526	SNH526 TC		**SNU526**
41,5	SNH528	SNH528 TC		**SNU528**
50,5	SNH530	SNH530 TC		**SNU530**
56,7	SNH532	SNH532 TC		**SNU532**

* Other products also available



https://nppnovoteh.com

15. BEARING UNITS

15.13. Split bearing housings for spherical roller and self aligning bearings – type SNU – Application



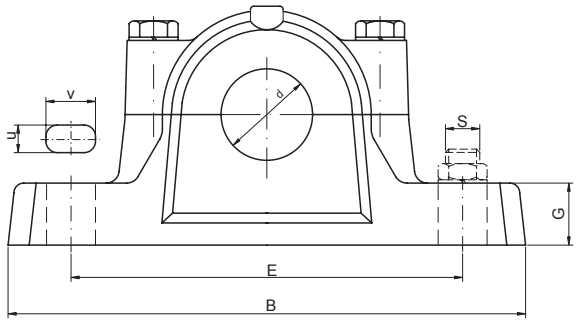

SNU..

Unit No.	Seal	Closing cap	SELF - ALIGNING BALL BEARINGS							
			bearing	sleeve	retaining ring		bearing	sleeve	retaining ring	
					PU..	pcs			PU..	pcs
SNU505	U505	505A	1205 K	H205	52X10	1	2205 K	H305	52X7	1
SNU605	U605	506A	1305 K	H305	62X7,5	2	2305 K	H2305	62X8	1
SNU506	U506	506A	1206 K	H206	62X8	2	2206 K	H306	62X6	2
SNU606	U606	507A	1306 K	H306	72X7,5	2	2306 K	H2306	72X7,5	1
SNU507	U507	507A	1207 K	H207	72X8,5	2	2207 K	H307	72X5,5	2
SNU607	U607	508A	1307 K	H307	80X9	2	2307 K	H2307	80X8	1
SNU508	U508	508A	1208 K	H208	80X10,5	2	2208 K	H308	80X8	2
SNU608	U608	510A	1308 K	H308	90X9	2	2308 K	H2308	90X8	1
SNU509	U509	509A	1209 K	H209	85X5,5	2	2209 K	H309	85X7	1
SNU609	U609	511A	1309 K	H309	100X9,5	2	2309 K	H2309	100X8	1
SNU510	U510	510A	1210 K	H210	90X10,5	2	2210 K	H310	90X9	2
SNU610	U610	512A	1310 K	H310	110X10,5	2	2310 K	H2310	110X8	1
SNU511	U511	511A	1211 K	H211	100X11,5	2	2211 K	H311	100X9,5	2
SNU611	U611	513A	1311 K	H311	120X11	2	2311 K	H2311	120X8	1
SNU512	U512	512A	1212 K	H212	110X13	2	2212 K	H312	110X10	2
SNU612	U612	515A	1312 K	H312	130X12,5	2	2312 K	H2312	130X10	1
SNU513	U513	513A	1213 K	H213	120X14	2	2213 K	H313	120X10	2
SNU613	U613	516A	1313 K	H313	140X12,5	2	2313 K	H2313	140X10	1
SNU515	U515	515A	1215 K	H215	130X15,5	2	2215 K	H315	130X12,5	2
SNU615	U615	518A	1315 K	H315	160X14	2	2315 K	H2315	160X10	1
SNU516	U516	516A	1216 K	H216	140X16	2	2216 K	H316	140X12,5	2
SNU616	U616	519A	1316 K	H316	170X14,5	2	2316 K	H2316	170X10	1
SNU517	U517	517A	1217 K	H217	150X16,5	2	2217 K	H317	150X12,5	2
SNU617	U617	520A	1317 K	H317	180X14,5	2	2317 K	H2317	180X10	1
SNU518	U518	518A	1218 K	H218	160X17,5	2	2218 K	H318	160X12,5	2
SNU519	U519	519A	1219 K	H219	170X18	2	2219 K	H319	170X12,5	2
SNU619	U619	522A	-	-	-	-	-	-	-	-
SNU520	U520	520A	1220 K	H220	180X18	2	2220 K	H320	180X12	2
SNU620	U620	524A	-	-	-	-	-	-	-	-
SNU522	U522	522A	1222 K	H222	200X21	2	2222 K	H322	200X13,5	2
SNU524	U524	524A	-	-	-	-	-	-	-	-
SNU526	U526	526A	-	-	-	-	-	-	-	-
SNU528	U528	528A	-	-	-	-	-	-	-	-
SNU530	U530	530A	-	-	-	-	-	-	-	-
SNU532	U532	532A	-	-	-	-	-	-	-	-

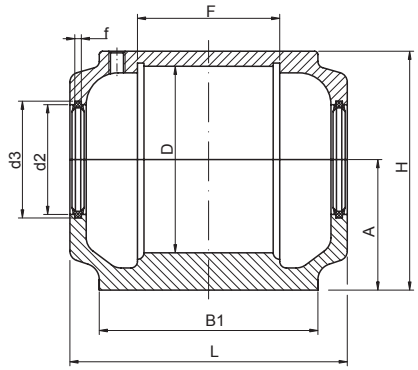

SPHERICAL ROLLER BEARINGS								Unit No.
bearing	sleeve	retaining ring		bearing	sleeve	retaining ring		
		PU..	pcs			PU..	pcs	
-	-	-	-	-	-	-	-	**SNU505**
-	-	-	-	-	-	-	-	**SNU605**
-	-	-	-	-	-	-	-	**SNU506**
-	-	-	-	-	-	-	-	**SNU606**
22207 K	H307	72X5,5	2	-	-	-	-	**SNU507**
-	-	-	-	-	-	-	-	**SNU607**
22208 K	H308	80X8	2	-	-	-	-	**SNU508**
21308 K	H308	90X9	2	22308 K	H2308	90X8	1	**SNU608**
22209 K	H309	85X7	1	-	-	-	-	**SNU509**
21309 K	H309	100X9,5	2	22309 K	H2309	100X8	1	**SNU609**
22210 K	H310	90X9	2	-	-	-	-	**SNU510**
21310 K	H310	110X10,5	2	22310 K	H2310	110X8	1	**SNU610**
22211 K	H311	100X9,5	2	-	-	-	-	**SNU511**
21311 K	H311	120X11	2	22311 K	H2311	120X8	1	**SNU611**
22212 K	H312	110X10	2	-	-	-	-	**SNU512**
21312 K	H312	130X12,5	2	22312 K	H2312	130X10	1	**SNU612**
22213 K	H313	120X10	2	-	-	-	-	**SNU513**
21313 K	H313	140X12,5	2	22313 K	H2313	140X10	1	**SNU613**
22215 K	H315	130X12,5	2	-	-	-	-	**SNU515**
21315 K	H315	160X14	2	22315 K	H2315	160X10	1	**SNU615**
22216 K	H316	140X12,5	2	-	-	-	-	**SNU516**
21616 K	H316	170X14,5	2	22316 K	H2316	170X10	1	**SNU616**
22217 K	H317	150X12,5	2	-	-	-	-	**SNU517**
21717 K	H317	180X14,5	2	22317 K	H2317	180X10	1	**SNU617**
22218 K	H318	160X12,5	2	23218 K	H2318	160X12,5	1	**SNU518**
22219 K	H319	170X12,5	2	-	-	-	-	**SNU519**
22319 K	H2319	200X13	1	-	-	-	-	**SNU619**
22220 K	H320	180X12	2	23220 K	H2320	180X9,7	1	**SNU520**
22320 K	H2320	215X13	1	-	-	-	-	**SNU620**
22222 K	H322	200X13,5	2	23222 K	H2322	200X10	1	**SNU522**
22224 K	H3124	215X14	2	23224 K	H2324	215X10	1	**SNU524**
22226 K	H3126	230X13	2	23226 K	H2326	230X10	1	**SNU526**
22228 K	H3128	250X15	2	23228 K	H2328	250X10	1	**SNU528**
22230 K	H3130	270X16,5	2	23230 K	H2330	270X10	1	**SNU530**
22232 K	H3132	290X17	2	23232 K	H2332	290X10	1	**SNU532**

https://nppnovoteh.com

16. LINEAR BALL BEARINGS



LINEAR GUIDANCE SYSTEM

PROWADNICE LINI



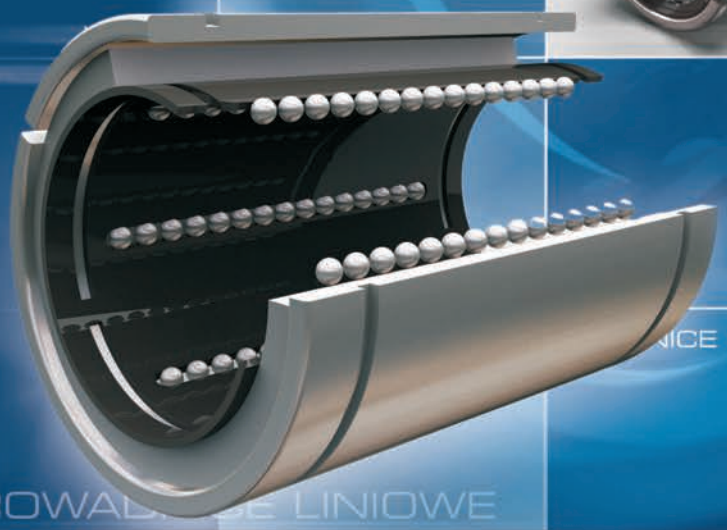

NICE LINIOWE

PROWAD LINIOWE

TABLES:

16. LINEAR BALL BEARINGS
16.1. Thin-walled and solid linear ball bearings

INTRODUCTION:

16. Linear ball bearings

16.1. Main series:

- **LM..** - solid, Japanese dimension standard, sealed
- **KB..** - solid, European dimension standard, sealed

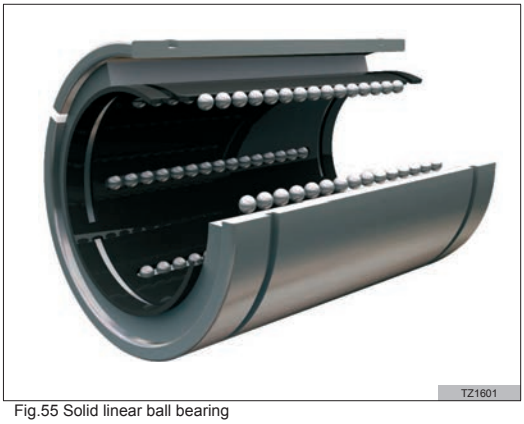

Fig.55 Solid linear ball bearing

They are available in three versions, appropriate designations can be found behind the symbol:
- **..UU** basic version without cuts
- **..AJ** narrow cut for clearance adjustment
- **..OP** wide cut, adapted for operation on profiled rails.

NOTE. UU symbol means generally a seal, but in case of the AJ- and OP-type linear ball bearings it is omitted despite the fact that they are sealed.

- **KH..PP** – Thin-walled, European dimension standard, sealed (PP) ensuring the minimum cross-section of the bearing-closed pairs at high load carrying capacity. Key feature is that the returning row of balls can be seen from the outside through cuts in the outside housing.

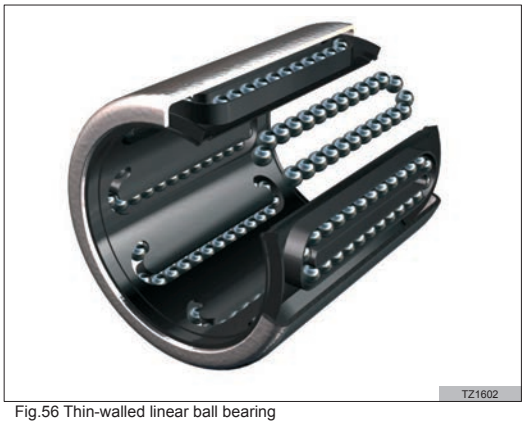

Fig.56 Thin-walled linear ball bearing

16.2. Features

Systems of linear movement matter more and more in modern technological solutions. Because of a very high guiding precision, compact construction, and considerable load carrying capacity as well as longevity at the same time, they are among the best solutions of today automatics.

The number of visible rows of balls inside the linear ball bearing does not result from its series but rather from the bearing size.

Linear ball bearings are also commonly called rolling sleeves. There are also many interacting elements besides linear ball bearings themselves: e.g. rods, rails and housings.

Solid linear ball bearings are available in two dimension standards, whereas all versions are standard sealed from both sides. Dimension standards, Japanese (LM) and European (KB) differ slightly from each other in main dimensions.

https://nppnovoteh.com

16. LINEAR BALL BEARINGS

16.1. Thin-walled and solid linear ball bearings

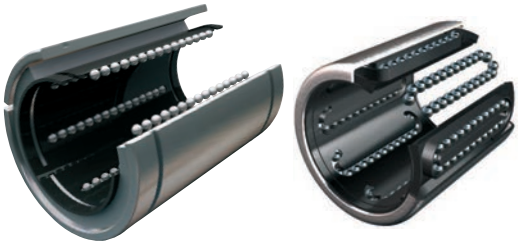

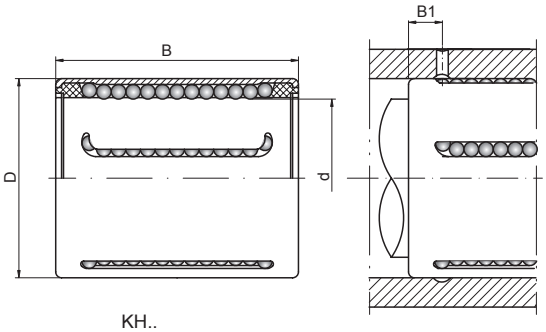

KH..

6 – 30 mm

Shaft [mm]	Bearing No.	Dimensions [mm]							
		d	D	B	B1	W	D1	h	h1
6	**LM 06 AJ**	6	12	19	13,5	1,10	11,5	1,0	-
	LM 06 OP	6	12	19	13,5	1,10	11,5	-	3,7
	LM 06 UU	6	12	19	13,5	1,10	11,5	-	-
	KH0622 PP	6	12	22	4	-	-	-	-
8	**LM 08 AJ**	8	15	24	17,5	1,10	14,3	1,0	-
	LM 08 OP	8	15	24	17,5	1,10	14,3	-	5,5
	LM 08 UU	8	15	24	17,5	1,10	14,3	-	-
	KH0824 PP	8	15	24	6	-	-	-	-
	KB0825 AJ	8	16	25	16	1	14,5	1	-
	KB0825 UU	8	16	25	16	1	14,5	-	-
10	**KH1026 PP**	10	17	26	6	-	-	-	-
	LM 10 AJ	10	19	29	22,0	1,30	18,0	1,0	-
	LM 10 OP	10	19	29	22,0	1,30	18,0	-	6,8
	LM 10 UU	10	19	29	22,0	1,30	18,0	-	-
12	**KH1228 PP**	12	19	28	6	-	-	-	-
	LM 12 AJ	12	21	30	23,0	1,30	20,0	1,5	-
	LM 12 OP	12	21	30	23,0	1,30	20,0	-	8,0
	LM 12 UU	12	21	30	23,0	1,30	20,0	-	-
	KB1232 AJ	12	22	32	22,6	1,3	21	1	-
	KB1232 OP	12	22	32	22,6	1,3	21	-	7,7
	KB1232 UU	12	22	32	22,6	1,3	21	-	-
13	**LM 13 AJ**	13	23	32	23,0	1,30	22,0	1,5	-
	LM 13 OP	13	23	32	23,0	1,30	22,0	-	9,0
	LM 13 UU	13	23	32	23,0	1,30	22,0	-	-
14	**KH1428 PP**	14	21	28	6	-	-	-	-
16	**KH1630 PP**	16	24	30	7	-	-	-	-
	KB1636 AJ	16	26	36	24,6	1,3	24,9	1	-
	KB1636 OP	16	26	36	24,6	1,3	24,9	-	10,1
	KB1636 UU	16	26	36	24,6	1,3	24,9	-	-
	LM 16 AJ	16	28	37	26,5	1,60	27,0	1,5	-
	LM 16 OP	16	28	37	26,5	1,60	27,0	-	11,0
	LM 16 UU	16	28	37	26,5	1,60	27,0	-	-
20	**KH2030 PP**	20	28	30	7	-	-	-	-
	LM 20 AJ	20	32	42	30,5	1,60	30,5	1,5	-
	LM 20 OP	20	32	42	30,5	1,60	30,5	-	11,0
	LM 20 UU	20	32	42	30,5	1,60	30,5	-	-
	KB2045 AJ	20	32	45	31,2	1,6	30,3	1	-
	KB2045 OP	20	32	45	31,2	1,6	30,3	-	10
	KB2045 UU	20	32	45	31,2	1,6	30,3	-	-
25	**KH2540 PP**	25	35	40	8	-	-	-	-
	KB2558 AJ	25	40	58	43,7	1,85	37,5	1	-
	KB2558 OP	25	40	58	43,7	1,85	37,5	-	12,5
	KB2558 UU	25	40	58	43,7	1,85	37,5	-	-
	LM 25 AJ	25	40	59	41,0	1,85	38,0	2,0	-
	LM 25 OP	25	40	59	41,0	1,85	38,0	-	12,0
	LM 25 UU	25	40	59	41,0	1,85	38,0	-	-
30	**KH3050 PP**	30	40	50	8	-	-	-	-

- warehouse - order - phone

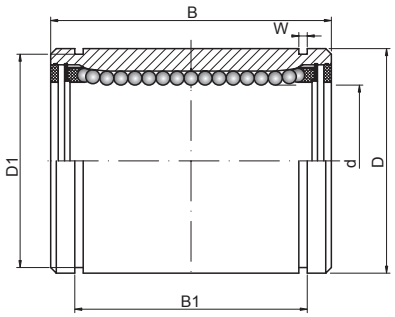

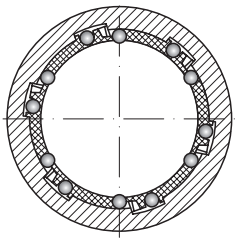

LM.. , KB.. UU

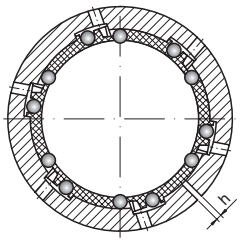

LM.. , KB.. AJ

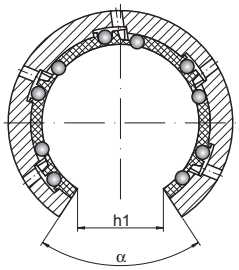

LM.. , KB.. OP

Angle [°] α	Weight [kg]	Basic load ratings [kN]		Basic makes*	Bearing No.
		dyn. C	stat. C_0	-	
-	0,011	0,24	0,19		**LM 06 AJ**
80	0,00825	0,24	0,19		**LM 06 OP**
-	0,011	0,24	0,19		**LM 06 UU**
-	0,007	0,34	0,24		**KH0622 PP**
-	0,011	0,365	0,24		**LM 08 AJ**
80	0,00825	0,365	0,24		**LM 08 OP**
-	0,011	0,365	0,24		**LM 08 UU**
-	0,0122	0,41	0,28		**KH0824 PP**
-	0,011	0,365	0,24		**KB0825 AJ**
-	0,011	0,365	0,24		**KB0825 UU**
-	0,0145	0,51	0,37		**KH1026 PP**
-	0,012	0,5	0,34		**LM 10 AJ**
80	0,009	0,5	0,34		**LM 10 OP**
-	0,012	0,5	0,34		**LM 10 UU**
-	0,0185	0,67	0,51		**KH1228 PP**
-	0,04	0,54	0,385		**LM 12 AJ**
80	0,03	0,54	0,385		**LM 12 OP**
-	0,04	0,54	0,385		**LM 12 UU**
-	0,04	0,54	0,385		**KB1232 AJ**
78	0,03	0,44	0,31		**KB1232 OP**
-	0,04	0,54	0,385		**KB1232 UU**
-	0,042	0,7	0,465		**LM 13 AJ**
80	0,0315	0,7	0,465		**LM 13 OP**
-	0,042	0,7	0,465		**LM 13 UU**
-	0,0205	0,69	0,52		**KH1428 PP**
-	0,0275	0,89	0,62		**KH1630 PP**
-	0,05	0,71	0,53		**KB1636 AJ**
78	0,04	0,57	0,43		**KB1636 OP**
-	0,05	0,71	0,53		**KB1636 UU**
-	0,05	0,71	0,53		**LM 16 AJ**
80	0,0375	0,71	0,53		**LM 16 OP**
-	0,05	0,71	0,53		**LM 16 UU**
-	0,0325	1,11	0,79		**KH2030 PP**
-	0,09	1,57	1,23		**LM 20 AJ**
80	0,0675	1,57	1,23		**LM 20 OP**
-	0,09	1,57	1,23		**LM 20 UU**
-	0,09	1,57	1,23		**KB2045 AJ**
60	0,07	1,26	0,99		**KB2045 OP**
-	0,09	1,57	1,23		**KB2045 UU**
-	0,066	2,28	1,67		**KH2540 PP**
-	0,19	2,8	2,22		**KB2558 AJ**
60	0,15	2,24	1,78		**KB2558 OP**
-	0,19	2,8	2,22		**KB2558 UU**
-	0,19	2,8	2,22		**LM 25 AJ**
50	0,1425	2,8	2,22		**LM 25 OP**
-	0,19	2,8	2,22		**LM 25 UU**
-	0,095	3,3	2,7		**KH3050 PP**

* Other products also available



https://nppnovoteh.com

16. LINEAR BALL BEARINGS

16.1. Thin-walled and solid linear ball bearings

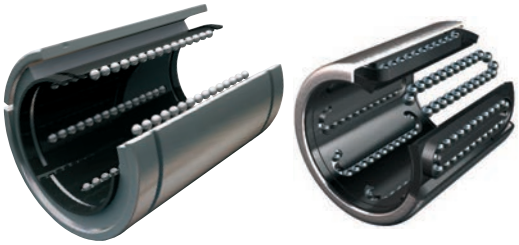

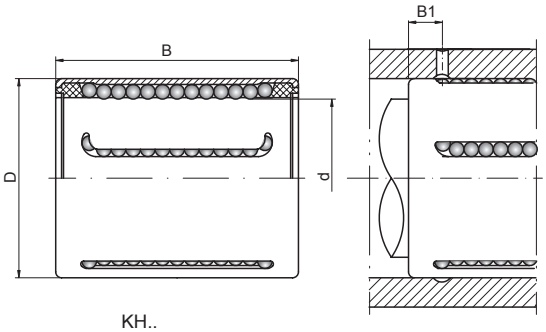

KH..

30 – 60 mm

Shaft [mm]	Bearing No.	Dimensions [mm]							
		d	D	B	B1	W	D1	h	h1
30 cont.	**LM 30 AJ**	30	45	64	44,5	1,85	43,0	2,5	-
	LM 30 OP	30	45	64	44,5	1,85	43,0	-	15,0
	LM 30 UU	30	45	64	44,5	1,85	43,0	-	-
	KB3068 AJ	30	47	68	51,7	1,85	44,5	1	-
	KB3068 OP	30	47	68	51,7	1,85	44,5	-	13,6
	KB3068 UU	30	47	68	51,7	1,85	44,5	-	-
35	**LM 35 AJ**	35	52	70	49,5	2,10	49,0	2,5	-
	LM 35 OP	35	52	70	49,5	2,10	49,0	-	17,0
	LM 35 UU	35	52	70	49,5	2,10	49,0	-	-
40	**KH4060 PP**	40	52	60	9	-	-	-	-
	LM 40 AJ	40	60	80	60,5	2,10	57,0	3,0	-
	LM 40 OP	40	60	80	60,5	2,10	57,0	-	20,0
	LM 40 UU	40	60	80	60,5	2,10	57,0	-	-
	KB4080 AJ	40	62	80	60,3	2,15	59	1	-
	KB4080 OP	40	62	80	60,3	2,15	59	-	18,2
	KB4080 UU	40	62	80	60,3	2,15	59	-	-
50	**KH5070 PP**	50	62	70	9	-	-	-	-
	KB50100 AJ	50	75	100	77,3	2,65	72	1	-
	KB50100 OP	50	75	100	77,3	2,65	72	-	22,7
	KB50100 UU	50	75	100	77,3	2,65	72	-	-
	LM 50 AJ	50	80	100	74,0	2,60	76,5	3,0	-
	LM 50 OP	50	80	100	74,0	2,60	76,5	-	25,0
	LM 50 UU	50	80	100	74,0	2,60	76,5	-	-
60	**LM 60 AJ**	60	90	110	85,0	3,15	86,5	3,0	-
	LM 60 OP	60	90	110	85,0	3,15	86,5	-	30,0
	LM 60 UU	60	90	110	85,0	3,15	86,5	-	-
80	**LM 80 OP**	80	120	140	105,5	4,15	116,0	-	40,0
	LM 80 AJ	80	120	140	105,5	4,15	116,0	3,0	-
	LM 80 UU	80	120	140	105,5	4,15	116,0	-	-

- warehouse - order - phone

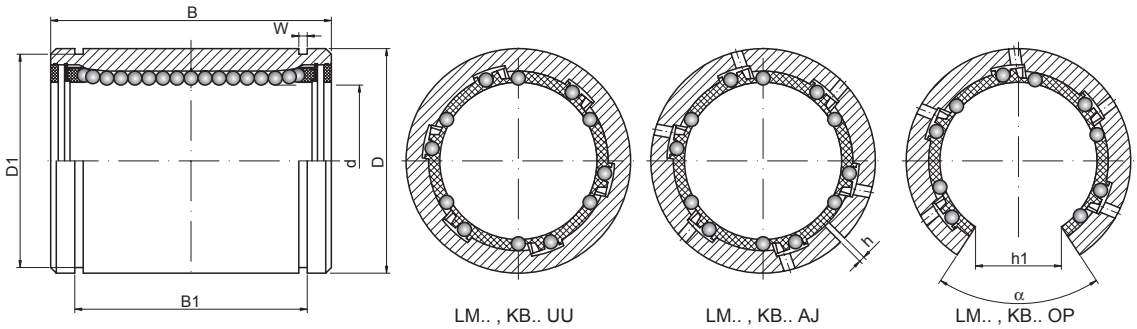

LM.. , KB.. UU | LM.. , KB.. AJ | LM.. , KB.. OP

Angle [°] α	Weight [kg]	Basic load ratings [kN]		Basic makes*	Bearing No.
		dyn. C	stat. C_0	-	
-	0,3	3,6	2,85		**LM 30 AJ**
50	0,225	3,6	2,85		**LM 30 OP**
-	0,3	3,6	2,85		**LM 30 UU**
-	0,3	3,6	2,85		**KB3068 AJ**
54	0,24	2,88	2,28		**KB3068 OP**
-	0,3	3,6	2,85		**KB3068 UU**
-	0,45	4,5	3,7		**LM 35 AJ**
50	0,34	4,5	3,7		**LM 35 OP**
-	0,45	4,5	3,7		**LM 35 UU**
-	0,182	5,3	4,5		**KH4060 PP**
-	0,6	6	4,4		**LM 40 AJ**
50	0,45	6	4,4		**LM 40 OP**
-	0,6	6	4,4		**LM 40 UU**
-	0,6	6	4,4		**KB4080 AJ**
54	0,52	4,8	3,52		**KB4080 OP**
-	0,6	6	4,4		**KB4080 UU**
-	0,252	6,8	6,3		**KH5070 PP**
-	1	7,5	4,9		**KB50100 AJ**
54	0,85	6	3,92		**KB50100 OP**
-	1	7,5	4,9		**KB50100 UU**
-	1	7,5	4,9		**LM 50 AJ**
50	0,85	7,5	4,9		**LM 50 OP**
-	1	7,5	4,9		**LM 50 UU**
-	1,7	9,5	5,6		**LM 60 AJ**
50	1,28	9,5	5,6		**LM 60 OP**
-	1,7	9,5	5,6		**LM 60 UU**
50	4,3	11,4	7,3		**LM 80 OP**
-	3,26	11,4	7,3		**LM 80 AJ**
-	4,3	11,4	7,3		**LM 80 UU**

* Other products also available



https://nppnovoteh.com

17. PLAIN BEARINGS



https://nppnovoteh.com

TABLES:

17. PLAIN BEARINGS
17.1. Radial spherical plain bearings
17.2. Thrust spherical plain bearings
17.3. Rod ends – type SA
17.4. Rod ends – type SI
17.5. Slide bearings – type TUP
17.6. Slide bearings – type TUF
17.7. Slide bearings – type TUW
17.8. Slide bearings – type TUZ

INTRODUCTION:

17. Plain bearings

In many cases the rolling bearings are not able to match the requirements that are demanded from them, despite wide variety of types, versions and sizes. Some features of rolling bearings disqualify them from being taken into account in the phase of defining construction principles. This features are, among others, big weight, large cross-section (bearing-closed pair size), dimension limitations (dimension series), relatively difficult mounting and dismounting and housing conditions (interacting parts), necessity for continuous or periodical supervision – additional lubrication, and relatively high price, especially of bearings with more complex construction. In the last years another branch of bearing mounting has been considerably developed, namely plain bearings, which find even more application in all branches of modern industry.

One can divide them into two essential groups:

- spherical plain bearings – this group is represented by **GE**-type spherical plain bearings and rod ends of **SA**- and **SI**-type – load is carried by the pair of own friction surfaces of these bearings
- slide bearings – one of the friction surfaces always belongs to the device interacting with the bearing – many variants are available, beginning with **TUP** and **TUF** sliding sleeves through to **TUW** sliding washers and sliding plates of various shapes and sizes.

17.1. Spherical plain bearings

Owing to their structure – rolling elements have been substituted for sliding elements, self-alignment: they are adapted for carrying very heavy loads. They carry out fixing, oscillatory, tilting and self-aligning movements. They have found application wherever rolling bearings were not able to fulfill their tasks properly as a result of too heavy loads.

There are many variants of plain bearings on account of structure and type of implemented materials. Key feature of spherical plain bearings is that both working surfaces (friction surfaces) belong to the bearing.

17.1.1. Maintenance and material used (interacting pairs)

- steel/steel – minimal supervision is necessary
- steel/sintered bronze – service-free
- steel/PTFE fabric – service-free (PTFE – teflon)
- steel/PTFE composite service-free (PTFE – teflon)
- chromium/PTFE composite – service-free (PTFE – teflon)
- steel/special bronze – service-free.

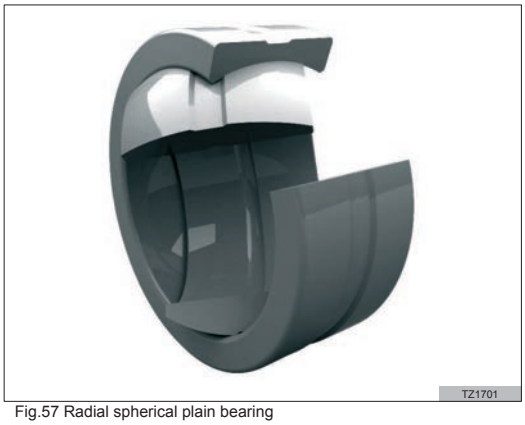

Fig.57 Radial spherical plain bearing

17.1.2. Dimension series

GE.. + (designation behind the size)

- **..ES** – standard (steel/steel)
- **..ES2RS** – standard (steel/steel) sealed version
- **..HS** – increased contact angle (steel/steel)
- **..HS2RS** – increased contact angle (steel/steel) sealed version
- **..ECR** – standard (chromium/composite)
- **..ECR2RS** – standard (chromium/composite) sealed version
- **..HCR** – increased contact angle (chromium/composite)
- **..HCR2RS** – increased contact angle (chromium/composite) sealed version
- **..QCR** – big sizes (chromium/PTFE fabric) split outer ring

GW.. - thrust bearings

Non-standard sizes are marked by the **X**-letter behind the bearing symbol.

For standard application **ES** basic-makes of bearings (also available in the sealed **..ES2RS** version) are recommended. However, one should not forget that contact angle in the sealed bearings is considerably limited. In case of very high and changing loads bearings with increased contact angle (**HS**-type, also available in the sealed version: **HS2RS**) are recommended. Service-free **CR**-series bearings are more and more popular, where conventional friction pairs have been replaced with the chromium/PTFE composite pair. Bearings of biggest sizes of **QCE**-series, on account of mounting procedure, have a two-piece outer ring connected with bolts.

https://nppnovoteh.com

17.2. Rod ends



Fig.58 Rod end with a threaded mandrel of SA- (SAL)-type

17.2.1. Dimension series

- **SA..** – "male" rod end, right-hand thread
- **SAL..** – "male" rod end, left-hand thread
- **SI..** – "female" rod end, right-hand thread
- **SIL..** – "female" rod end, left-hand thread.

17.2.2. Designation of friction pairs

- **T/K** – steel/PTFE (wrap for smaller bearings and soaked fabric for bigger bearings)
- **SS/M** – acid resistant steel / brass.

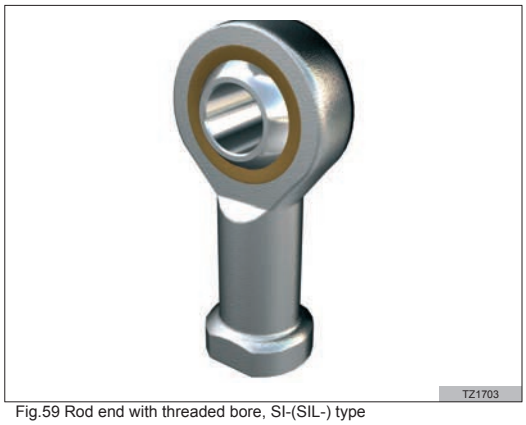

Fig.59 Rod end with threaded bore, SI-(SIL-) type

Rod ends with built-in plain bearings are ready-to-mount parts and can be quickly and easily fixed to the interacting machine elements. The wide variety of engineering solutions basing on the one hand on implementing various plain bearings (various materials of friction pairs) and on the other hand on various assembly options (internal or external threads, right-hand or left-hand threads) enable lots of construction solutions. Standard make (T/K) bases on the friction pair steel/PTFE (wrap or soaked fabric in larger bearings). For heavy-duty operation SS/M rod ends are most suitable, where special, acid resistant steel and brass constitute the friction pair.

17.3. Sliding sleeves and sliding washers of TUP-, TUF- and TUW-type

17.3.1. Basic series

- **TUP1..TUP2..** – sliding sleeves
- **TUF1..** – sliding sleeves with a flange
- **TUW1..TUW2..** – sliding washers

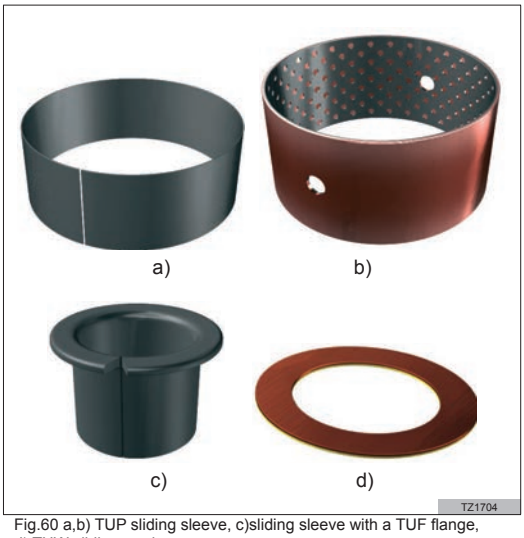

Fig.60 a,b) TUP sliding sleeve, c)sliding sleeve with a TUF flange, d) TUW sliding washer

Development of tribology – science, that treats (among others) friction problems – has largely contributed to the development of plain bearings. Owing to the new technology of laminar composite and polymer materials plain bearings have nearly limitless application.

New materials, that friction surfaces are made of , have lent bearings invaluable features:

- small resistance to motion (small moment of friction, small friction coefficient)
- high wear resistance
- ability to carry planned load
- vibration damping
- easiness of mechanical processing of sliding surfaces.

Additional, equally essential features:

- simple structure
- minimal cross-section
- availability of all shapes and sizes
- selection of friction surfaces depending on requirements
- service-free operation
- low price.

17.3.2. Material structure

17.3.2.a UF-1 Composite based on polytetrafluorethylene (PTFE)

- PTFE with lead press-molded in the porous bronze layer
- porous bronze
- base material – steel
- covering with zinc and electrolytic covering with copper.

UF-1 consists of three layers of materials: inside steel layer, combined with the porous bronze layer, using thermal method, soaked and interlaced with polymer. The surface of the polymer layer is smoothened to the depth of bronze cavities is a mix of PTFE and lead ca. 0,01-0,03 mm thick.

Application characteristics

- low oil demand or even no necessity of lubrication where it is difficult to apply it or in cases it is not used at all
- low friction coefficient, slow wear and tear, long life
- it can carry load on the whole surface keeping elasticity and plasticity
- it can be used in temperatures between -195°C and +280°C
- low level of vibration, noise and environmental pollution
- creating a thin PTEE-lead layer, preventing metal surface from tarnishing
- decreased level of hardness of the interacting surface is required
- compact and lightweight construction
- resistance to oil and water
- low thermal expansion
- good heat conduction at high dimensional stability
- when using special metal for covering - it keeps resistant to gases and various types of industrial grease
- increased tolerance to dust and dirt.

Grindability

UF-1 has a very low friction coefficient, which is within the range of 0,03 – 0,20, and drops at higher load and lower velocities. At trace oil amounts the friction coefficient for UF-1 may be lower than 0,05 despite low load and high velocity.

Wear

UF-1 is relatively easy to wear-in. Initial value (of the friction surface) amounts to 0,010 ~ 0,02 mm, whereas one part of PTFE surface is carried on the interacting surface, creating a translucent layer, which acts as a protecting grease, protecting the interacting surface, too.

Chemical properties

UF-1 surface is resistant to most chemical agents. Outside and inside steel surface is subject to oxidation and may be covered with thin protection layer. In case of exposing to corrosive influence UF-1 is electrolytically protected with lead, nickel, cadmium or chromium.

Limiting loads

Limiting loads for UF-1 may reach up to 140MPa with constant loads. If we want to increase its longevity, we shall decrease loads down to 56MPa with dynamic and changing loads.

Limiting PV coefficient

Product of load and sliding velocity is called PV-value of a bearing. It is a very important coefficient when choosing material for making a bearing, which at the same time allows to foresee the operation time. Of course, the longer bearings' longevity is required, the lower value of PV-coefficient should be. Moreover, various types of loads may act upon the sleeve longevity and limiting PV value.

Other factors

Besides load, limiting PV value and longevity under conditions of constant PV value the following issues play an important role: interacting material, its hardness and surface, as well as surrounding temperature. For example, when the UF-1 sleeve turns with the velocity V=1[m/s] in the room temperature, PV coefficient equals 1,2 [m/s MPa], and when temperature rises to 100°C, limiting PV amounts to 0,72 [m/s MPa], and in the temperature of 200°C, limiting PV is limited to 0,24 [ms/ MPa].

17.3.2.b UF-2 composite based on polyoxymethylene (POM)

- POM with many cavities arranged spirally and filled with plastic grease before assembly
- porous bronze
- base material – steel
- electrolytical covering with copper.

UF-2 consists of three material layers: inside steel layer is combined thermally with porous bronze layer, soaked and covered with modified polymers (polyacetale) with the surface of spiral furrows for delivering grease.

Diameter of furrows ranges between 2,5 mm and 3 mm and their depth between 0,3 mm and 0,5 mm. Before application furrows are filled with oil or another lubricating substance.

Characteristics and range of applications

Modified UF-2 surface lends special features to plain bearings. Furrows made in the working surface allow to use optimally even the smallest amount of grease, what significantly increases the longevity of bearings and ensures nearly service-free operation. In case of limiting the grease amount or lack of lubrication limiting PV values drop substantially, what essentially reduces the application of these bearings under such conditions. Bearings with UF-2 admixture are successfully applied in the so-called hybrid connections with rolling bearings, especially with spherical and cylindrical roller bearings. They can be mounted between the shaft and the rolling bearing or between the housing and the rolling bearing. Such solutions are recommended especially in case of changing loads and rotary velocity. Plain bearings significantly reduce wear and tear of rolling bearings during start-up, frequent stops and resumptions of operation, and improve rotational parameters of the system.

Loads

Loads of the sleeve made of UF-2 material can even reach 140MPa, under condition that they are constant and rotary velocity is relatively low. However, to increase longevity of bearings, the permissible load should be reduced.

Longevity

Longevity depends directly on PV value. If PV amounts to, e.g. 2,5, longevity equals about 200 hours, and if PV is 0,1, longevity may exceed 1000 hours. Additional lubrication of bearings made of UF-2 is recommended in the mid-life, e.g. if PV is 2,5, than one shall lubricate the bearing every 100 hours.

Bearing longevity also depends on surrounding temperature, hardness and structure of interacting surface.

https://nppnovoteh.com

17. PLAIN BEARINGS

17.1. Radial spherical plain bearings



6 – 25 mm

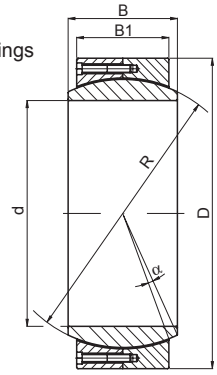

GE..

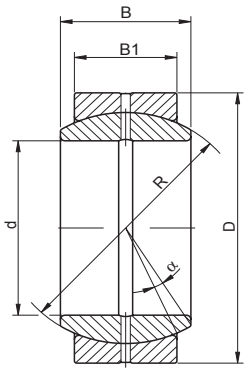

GE.. ES

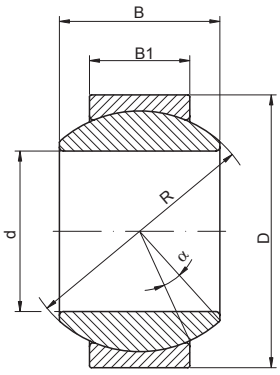

GE..HS

Shaft [mm]	Bearing No.	Dimensions [mm]						Weight [kg]
		d	D	B	B1	R	α	
6	**GE 006 ES**	6	14	6	4	10	13	0,004
	GE 006 ECR	6	14	6	4	10	13	0,004
	GE 006 HS	6	16	9	5	13	21	0,008
	GE 006 HCR	6	16	9	5	13	21	0,009
8	**GE 008 ES**	8	16	8	5	13	15	0,007
	GE 008 ECR	8	16	8	5	13	15	0,007
	GE 008 HS	8	19	11	6	16	21	0,014
	GE 008 HCR	8	19	11	6	16	21	0,014
	GE 008 XES	8	19	12	9	-	14	0,009
10	**GE 010 ES**	10	19	9	6	16	12	0,011
	GE 010 ECR	10	19	9	6	16	12	0,011
	GE 010 HS	10	22	12	7	18	18	0,02
	GE 010 HCR	10	22	12	7	18	18	0,02
	GE 010 XES	10	22	14	10,5	-	13	0,014
12	**GE 012 ES**	12	22	10	7	18	11	0,016
	GE 012 ECR	12	22	10	7	18	11	0,016
	GE 012 HS	12	26	15	9	22	18	0,034
	GE 012 HCR	12	26	15	9	22	18	0,036
	GE 012 XES	12	26	16	12	-	13	0,02
15	**GE 015 ES**	15	26	12	9	22	8	0,026
	GE 015 ES2RS	15	26	12	9	22	8	0,026
	GE 015 ECR	15	26	12	9	22	8	0,027
	GE 015 HS2RS	15	30	16	10	25	16	0,046
	GE 015 HCR	15	30	16	10	25	16	0,049
16	**GE 016 ES**	16	30	14	10	25	10	0,043
	GE 016 ES2RS	16	30	14	10	25	10	0,043
	GE 016 XES	16	32	21	15	-	15	0,047
	GE 016 XES2RS	16	32	21	15	-	15	0,047
17	**GE 017 ES**	17	30	14	10	25	10	0,039
	GE 017 ES2RS	17	30	14	10	25	10	0,039
	GE 017 ECR	17	30	14	10	25	10	0,037
	GE 017 ECR2RS	17	30	14	10	25	10	0,037
	GE 017 XES	17	32	14	10	-	10	0,041
	GE 017 XES2RS	17	32	14	10	-	10	0,041
	GE 017 HS2RS	17	35	20	12	29	19	0,077
	GE 017 HCR	17	35	20	12	29	19	0,082
18	**GE 018/32 XES**	18	32	19	15	-	10	0,053
	GE 018/32 XES2RS	18	32	19	15	-	10	0,053
20	**GE 020 ES**	20	35	16	12	29	9	0,061
	GE 020 ES2RS	20	35	16	12	29	9	0,061
	GE 020 ECR	20	35	16	12	29	9	0,06
	GE 020 ECR2RS	20	35	16	12	29	9	0,06
	GE 020 XES	20	42	25	16	-	16	0,16
	GE 020 XES2RS	20	42	25	16	-	15	0,16
	GE 020 HS2RS	20	42	25	16	35,5	17	0,15
	GE 020 HCR	20	42	25	16	35,5	17	0,16
25	**GE 025 ES**	25	42	20	16	35,5	7	0,11

- warehouse - order - phone

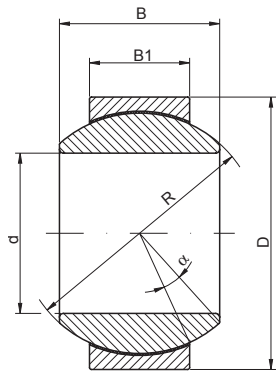

GE.. HCR

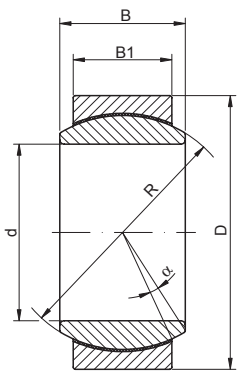

GE.. ECR

Basic load ratings [kN]		Basic makes*	Equivalent	Bearing No.
dyn. C	stat. C_0	-		
3,4	17		GE6 DO	**GE 006 ES**
3,6	9		GE6 UK	**GE 006 ECR**
5,5	27,5		GE6 FO	**GE 006 HS**
5,85	14,6		GE6 FW	**GE 006 HCR**
5,5	27,5		GE8 DO	**GE 008 ES**
5,85	14,6		GE8 UK	**GE 008 ECR**
8,15	40,5		GE8 FO	**GE 008 HS**
8,65	21,6		GE8 FW	**GE 008 HCR**
8	30		GE8 XDO	**GE 008 XES**
8,15	40,5		GE10 DO	**GE 010 ES**
8,65	21,6		GE10 UK	**GE 010 ECR**
10,8	54		GE10 FO	**GE 010 HS**
11,4	28,5		GE10 FW	**GE 010 HCR**
10	50		GE10 XDO	**GE 010 XES**
10,8	54		GE12 DO	**GE 012 ES**
11,4	28,5		GE12 UK	**GE 012 ECR**
17	85		GE12 FO	**GE 012 HS**
17,6	44		GE12 FW	**GE 012 HCR**
15	70		GE12 XDO	**GE 012 XES**
17	85		GE15 DO	**GE 015 ES**
17	85		GE15 DO2RS	**GE 015 ES2RS**
17,6	44		GE15 UK	**GE 015 ECR**
21,2	106		GE15 FO2RS	**GE 015 HS2RS**
22,4	56		GE15 FW	**GE 015 HCR**
21,2	106		GE16 DO	**GE 016 ES**
21,2	106		GE16 DO2RS	**GE 016 ES2RS**
30	120		GE16 XDO	**GE 016 XES**
30	120		GE16 XDO2RS	**GE 016 XES2RS**
21,2	106		GE17 DO	**GE 017 ES**
21,2	106		GE17 DO2RS	**GE 017 ES2RS**
22,4	56		GE17 UK	**GE 017 ECR**
32,5	65		GE17 UK2RS	**GE 017 ECR2RS**
35	130		GE17 XDO	**GE 017 XES**
35	130		GE17 XDO2RS	**GE 017 XES2RS**
30	146		GE17 FO2RS	**GE 017 HS2RS**
31,5	78		GE17 FW	**GE 017 HCR**
45	180		GE18/32 XDO	**GE 018/32 XES**
45	180		GE18/32 XDO2RS	**GE 018/32 XES2RS**
30	146		GE20 DO	**GE 020 ES**
30	146		GE20 DO2RS	**GE 020 ES2RS**
31,5	78		GE20 UK	**GE 020 ECR**
45	90		GE20 UK2RS	**GE 020 ECR2RS**
48	240		GE20 XDO	**GE 020 XES**
48	240		GE20 XDO2RS	**GE 020 XES2RS**
48	240		GE20 FO2RS	**GE 020 HS2RS**
51	127		GE20 FW	**GE 020 HCR**
48	240		GE25 DO	**GE 025 ES**

* Other products also available



17. PLAIN BEARINGS

17.1. Radial spherical plain bearings



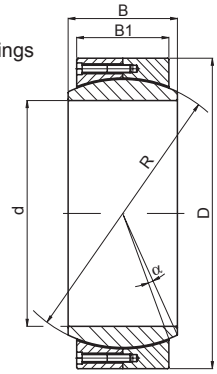

GE..

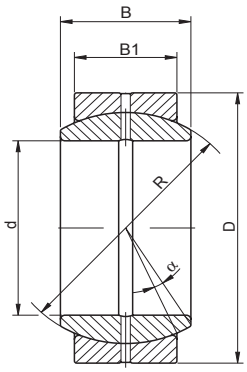

GE.. ES

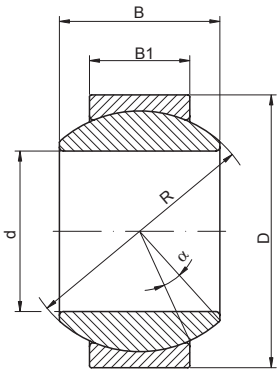

GE..HS

25 – 50 mm

Shaft [mm]	Bearing No.	Dimensions [mm]						Weight [kg]
		d	D	B	B1	R	α	
25 cont.	**GE 025 ES2RS**	25	42	20	16	35,5	7	0,11
	GE 025 ECR	25	42	20	16	35,5	7	0,11
	GE 025 ECR2RS	25	42	20	16	35,5	7	0,11
	GE 025 XES	25	47	28	18	-	15	0,2
	GE 025 XES2RS	25	47	28	18	-	14	0,2
	GE 025 HS2RS	25	47	28	18	40,7	17	0,19
	GE 025 HCR	25	47	28	18	40,7	17	0,2
30	**GE 030 ES**	30	47	22	18	40,7	6	0,14
	GE 030 ES2RS	30	47	22	18	40,7	6	0,14
	GE 030 ECR	30	47	22	18	40,7	6	0,14
	GE 030 ECR2RS	30	47	22	18	40,7	6	0,14
	GE 030 XES	30	55	32	20	-	17	0,35
	GE 030 XES2RS	30	55	32	20	-	16	0,35
	GE 030 HS2RS	30	55	32	20	47	17	0,29
	GE 030 HCR2RS	30	55	32	20	47	17	0,28
32	**GE 032/50 XES**	32	50	22	18	-	6	0,18
	GE 032/50 XES2RS	32	50	22	18	-	6	0,18
	GE 032/62 XES	32	62	30	22	-	10	0,26
	GE 032/62 XES2RS	32	62	30	22	-	10	0,26
35	**GE 035 ES**	35	55	25	20	47	6	0,22
	GE 035 ES2RS	35	55	25	20	47	6	0,22
	GE 035 ECR2RS	35	55	25	20	47	6	0,22
	GE 035 XES	35	62	35	22	-	16	0,47
	GE 035 XES2RS	35	62	35	22	-	15	0,47
	GE 035 HS2RS	35	62	35	22	53	16	0,38
	GE 035 HCR2RS	35	62	35	22	53	16	0,38
40	**GE 040 ES**	40	62	28	22	53	7	0,3
	GE 040 ES2RS	40	62	28	22	53	7	0,3
	GE 040 ECR2RS	40	62	28	22	53	7	0,3
	GE 040/65 XES	40	65	32	25	-	8	0,45
	GE 040/65 XES2RS	40	65	32	25	-	8	0,45
	GE 040 XES	40	68	40	25	-	15	0,61
	GE 040 XES2RS	40	68	40	25	-	14	0,61
	GE 040 HS2RS	40	68	40	25	60	17	0,54
	GE 040 HCR2RS	40	68	40	25	60	17	0,53
45	**GE 045 ES**	45	68	32	25	60	7	0,41
	GE 045 ES2RS	45	68	32	25	60	7	0,41
	GE 045 ECR2RS	45	68	32	25	60	7	0,39
	GE 045 XES	45	75	43	28	-	14	0,8
	GE 045 XES2RS	45	75	43	28	-	13	0,8
	GE 045 HS2RS	45	75	43	28	66	15	0,68
	GE 045 HCR2RS	45	75	43	28	66	15	0,67
50	**GE 050 ES**	50	75	35	28	66	6	0,53
	GE 050 ES2RS	50	75	35	28	66	6	0,53
	GE 050 ECR2RS	50	75	35	28	66	6	0,53
	GE 050/80 XES	50	80	40	32	-	8	0,71
	GE 050/80 XES2RS	50	80	40	32	-	8	0,71
	GE 050 XES	50	90	56	36	-	17	1,4
	GE 050 XES2RS	50	90	56	36	-	16	1,4
	GE 050 HS2RS	50	90	56	36	80	17	1,4

- warehouse - order - phone

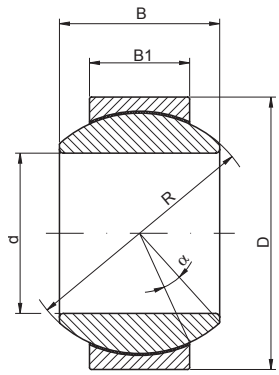

GE.. HCR

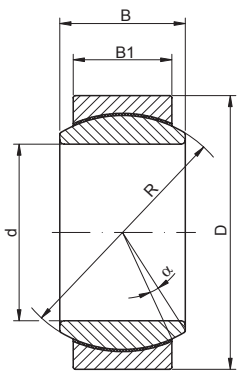

GE.. ECR

Basic load ratings [kN]		Basic makes*	Equivalent	Bearing No.
dyn. C	stat. C_0	-		
48	240		GE25 DO2RS	**GE 025 ES2RS**
51	127		GE25 UK	**GE 025 ECR**
85	170		GE25 UK2RS	**GE 025 ECR2RS**
62	310		GE25 XDO	**GE 025 XES**
62	310		GE25 XDO2RS	**GE 025 XES2RS**
62	310		GE25 FO2RS	**GE 025 HS2RS**
65,5	166		GE25 FW	**GE 025 HCR**
62	310		GE30 DO	**GE 030 ES**
62	310		GE30 DO2RS	**GE 030 ES2RS**
65,5	166		GE30 UK	**GE 030 ECR**
110	220		GE30 UK2RS	**GE 030 ECR2RS**
80	400		GE30 XDO	**GE 030 XES**
80	400		GE30 XDO2RS	**GE 030 XES2RS**
80	400		GE30 FO2RS	**GE 030 HS2RS**
140	280		GE30 FW2RS	**GE 030 HCR2RS**
100	450		GE32/50 XDO	**GE 032/50 XES**
100	450		GE32/50 XDO2RS	**GE 032/50 XES2RS**
150	550		GE32/62 XDO	**GE 032/62 XES**
150	550		GE32/62 XDO2RS	**GE 032/62 XES2RS**
80	400		GE35 DO	**GE 035 ES**
80	400		GE35 DO2RS	**GE 035 ES2RS**
140	280		GE35 UK2RS	**GE 035 ECR2RS**
100	500		GE35 XDO	**GE 035 XES**
100	500		GE35 XDO2RS	**GE 035 XES2RS**
100	500		GE35 FO2RS	**GE 035 HS2RS**
185	370		GE35 FW2RS	**GE 035 HCR2RS**
100	500		GE40 DO	**GE 040 ES**
100	500		GE40 DO2RS	**GE 040 ES2RS**
185	370		GE40 UK2RS	**GE 040 ECR2RS**
110	600		GE40/65 XDO	**GE 040/65 XES**
110	600		GE40/65 XDO2RS	**GE 040/65 XES2RS**
127	640		GE40 XDO	**GE 040 XES**
127	640		GE40 XDO2RS	**GE 040 XES2RS**
127	640		GE40 FO2RS	**GE 040 HS2RS**
240	480		GE40 FW2RS	**GE 040 HCR2RS**
127	640		GE45 DO	**GE 045 ES**
127	640		GE45 DO2RS	**GE 045 ES2RS**
240	480		GE45 UK2RS	**GE 045 ECR2RS**
156	780		GE45 XDO	**GE 045 XES**
156	780		GE45 XDO2RS	**GE 045 XES2RS**
156	780		GE45 FO2RS	**GE 045 HS2RS**
295	590		GE45 FW2RS	**GE 045 HCR2RS**
156	780		GE50 DO	**GE 050 ES**
156	780		GE50 DO2RS	**GE 050 ES2RS**
295	590		GE50 UK2RS	**GE 050 ECR2RS**
180	900		GE50/80 XDO	**GE 050/80 XES**
180	900		GE50/80 XDO2RS	**GE 050/80 XES2RS**
245	1 220		GE50 XDO	**GE 050 XES**
245	1 220		GE50 XDO2RS	**GE 050 XES2RS**
245	1220		GE50 FO2RS	**GE 050 HS2RS**

* Other products also available

https://nppnovoteh.com

17. PLAIN BEARINGS

17.1. Radial spherical plain bearings



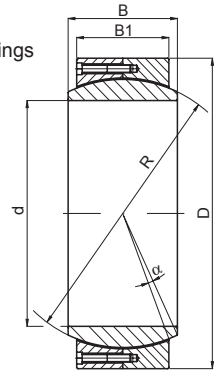

GE..

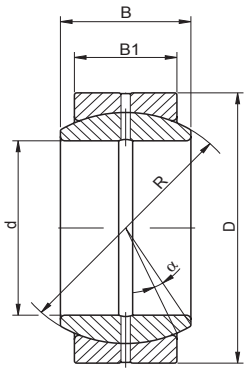

GE.. ES

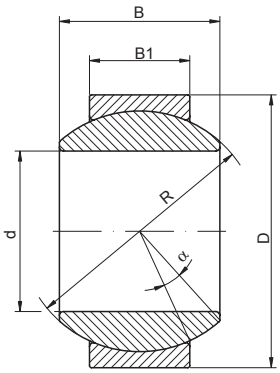

GE..HS

50 – 120 mm

Shaft [mm]	Bearing No.	Dimensions [mm]						Weight [kg]
		d	D	B	B1	R	α	
50 cont.	**GE 050 HCR2RS**	50	90	56	36	80	17	1,4
60	**GE 060 ES**	60	90	44	36	80	6	1
	GE 060 ES2RS	60	90	44	36	80	6	1
	GE 060 ECR2RS	60	90	44	36	80	6	0,98
	GE 060 XES	60	105	63	40	-	16	2,4
	GE 060 XES2RS	60	105	63	40	-	15	2,4
	GE 060 HS2RS	60	105	63	40	92	17	2
	GE 060 HCR2RS	60	105	63	40	92	17	2,1
70	**GE 070 ES**	70	105	49	40	92	6	1,5
	GE 070 ES2RS	70	105	49	40	92	6	1,5
	GE 070 ECR2RS	70	105	49	40	92	6	1,5
	GE 070 XES	70	120	70	45	-	16	3,4
	GE 070 XES2RS	70	120	70	45	-	14	3,4
	GE 070 HS2RS	70	120	70	45	105	16	2,9
	GE 070 HCR2RS	70	120	70	45	105	16	3
80	**GE 080 ES**	80	120	55	45	105	6	2,2
	GE 080 ES2RS	80	120	55	45	105	6	2,2
	GE 080 ECR2RS	80	120	55	45	105	6	2,2
	GE 080 XES	80	130	75	50	-	14	4,1
	GE 080 XES2RS	80	130	75	50	-	13	4,1
	GE 080 HS2RS	80	130	75	50	115	14	3,5
	GE 080 HCR2RS	80	130	75	50	115	14	3,6
90	**GE 090 ES**	90	130	60	50	115	5	2,7
	GE 090 ES2RS	90	130	60	50	115	5	2,7
	GE 090 ECR2RS	90	130	60	50	115	5	2,7
	GE 090 XES	90	150	85	55	-	15	6,3
	GE 090 XES2RS	90	150	85	55	-	14	6,3
	GE 090 HS2RS	90	150	85	55	130	15	5,4
	GE 090 HCR2RS	90	150	85	55	130	15	5,3
100	**GE 100 ES**	100	150	70	55	130	7	4,3
	GE 100 ES2RS	100	150	70	55	130	7	4,3
	GE 100 ECR2RS	100	150	70	55	130	7	4,2
	GE 100 XES	100	160	85	55	-	13	6,8
	GE 100 XES2RS	100	160	85	55	-	12	6,8
	GE 100 HS2RS	100	160	85	55	140	14	5,9
	GE 100 HCR2RS	100	160	85	55	140	14	6
110	**GE 110 ES**	110	160	70	55	140	6	4,7
	GE 110 ES2RS	110	160	70	55	140	6	4,7
	GE 110 ECR2RS	110	160	70	55	140	6	4,7
	GE 110 XES	110	180	100	70	-	12	11
	GE 110 XES2RS	110	180	100	70	-	11	11
	GE 110 HS2RS	110	180	100	70	160	12	9,6
	GE 110 HCR2RS	110	180	100	70	160	12	9,8
120	**GE 120 ES**	120	180	85	70	160	6	8
	GE 120 ES2RS	120	180	85	70	160	6	8
	GE 120 ECR2RS	120	180	85	70	160	6	8,1
	GE 120 XES	120	210	115	70	-	16	15
	GE 120 XES2RS	120	210	115	70	-	15	15
	GE 120 HS2RS	120	210	115	70	180	16	15,1

- warehouse - order - phone

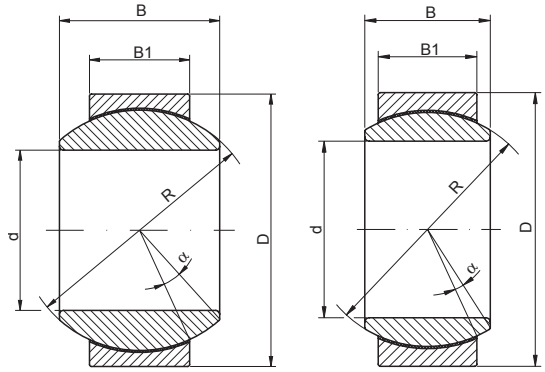

GE.. HCR GE.. ECR

Basic load ratings [kN]		Basic makes*	Equivalent	Bearing No.
dyn. C	stat. C_0	-		
460	920		GE50 FW2RS	**GE 050 HCR2RS**
245	1220		GE60 DO	**GE 060 ES**
245	1220		GE60 DO2RS	**GE 060 ES2RS**
460	920		GE60 UK2RS	**GE 060 ECR2RS**
315	1 560		GE60 XDO	**GE 060 XES**
315	1 560		GE60 XDO2RS	**GE 060 XES2RS**
315	1560		GE60 FO2RS	**GE 060 HS2RS**
590	1180		GE60 FW2RS	**GE 060 HCR2RS**
315	1560		GE70 DO	**GE 070 ES**
315	1560		GE70 DO2RS	**GE 070 ES2RS**
590	1180		GE70 UK2RS	**GE 070 ECR2RS**
400	2 000		GE70 XDO	**GE 070 XES**
400	2 000		GE70 XDO2RS	**GE 070 XES2RS**
400	2000		GE70 FO2RS	**GE 070 HS2RS**
750	1500		GE70 FW2RS	**GE 070 HCR2RS**
400	2000		GE80 DO	**GE 080 ES**
400	2000		GE80 DO2RS	**GE 080 ES2RS**
750	1500		GE80 UK2RS	**GE 080 ECR2RS**
490	2 450		GE80 XDO	**GE 080 XES**
490	2 450		GE80 XDO2RS	**GE 080 XES2RS**
490	2450		GE80 FO2RS	**GE 080 HS2RS**
920	1840		GE80 FW2RS	**GE 080 HCR2RS**
490	2450		GE90 DO	**GE 090 ES**
490	2450		GE90 DO2RS	**GE 090 ES2RS**
920	1840		GE90 UK2RS	**GE 090 ECR2RS**
610	3 050		GE90 XDO	**GE 090 XES**
610	3 050		GE90 XDO2RS	**GE 090 XES2RS**
610	3050		GE90 FO2RS	**GE 090 HS2RS**
1145	2290		GE90 FW2RS	**GE 090 HCR2RS**
610	3050		GE100 DO	**GE 100 ES**
610	3050		GE100 DO2RS	**GE 100 ES2RS**
1145	2290		GE100 UK2RS	**GE 100 ECR2RS**
655	3 250		GE100 XDO	**GE 100 XES**
655	3 250		GE100 XDO2RS	**GE 100 XES2RS**
655	3250		GE100 FO2RS	**GE 100 HS2RS**
1230	2460		GE100 FW2RS	**GE 100 HCR2RS**
655	3250		GE110 DO	**GE 110 ES**
655	3250		GE110 DO2RS	**GE 110 ES2RS**
1230	2460		GE110 UK2RS	**GE 110 ECR2RS**
950	4 750		GE110 XDO	**GE 110 XES**
950	4 750		GE110 XDO2RS	**GE 110 XES2RS**
950	4750		GE110 FO2RS	**GE 110 HS2RS**
1790	3580		GE110 FW2RS	**GE 110 HCR2RS**
950	4750		GE120 DO	**GE 120 ES**
950	4750		GE120 DO2RS	**GE 120 ES2RS**
1790	3580		GE120 UK2RS	**GE 120 ECR2RS**
1 080	5 400		GE120 XDO	**GE 120 XES**
1 080	5 400		GE120 XDO2RS	**GE 120 XES2RS**
1080	5400		GE120 FO2RS	**GE 120 HS2RS**

* Other products also available

https://nppnovoteh.com

17. PLAIN BEARINGS

17.1. Radial spherical plain bearings



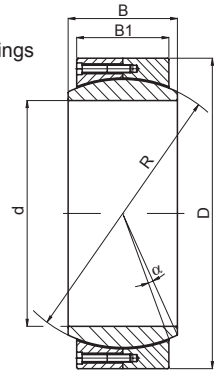

GE..

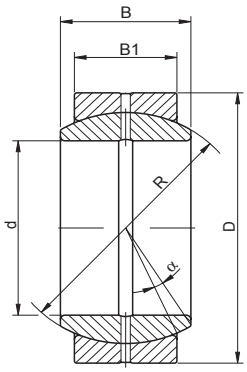

GE.. ES

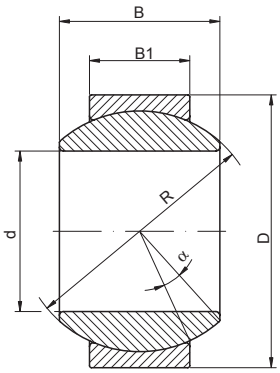

GE..HS

120 – 320 mm

Shaft [mm]	Bearing No.	Dimensions [mm]						Weight [kg]
		d	D	B	B1	R	α	
120 cont.	**GE 120 HCR2RS**	120	210	115	70	180	16	14,6
140	**GE 140 ES**	140	210	90	70	180	7	11
	GE 140 ES2RS	140	210	90	70	180	7	11
	GE 140 ECR2RS	140	210	90	70	180	7	10,6
	GE 140 HS2RS	140	230	130	80	200	16	18,8
	GE 140 HCR2RS	140	230	130	80	200	16	18,6
160	**GE 160 ES**	160	230	105	80	200	8	14
	GE 160 ES2RS	160	230	105	80	200	8	14
	GE 160 ECR2RS	160	230	105	80	200	8	13,8
	GE 160 HS2RS	160	260	135	80	225	16	24,7
	GE 160 HCR2RS	160	260	135	80	225	16	24,9
180	**GE 180 ES**	180	260	105	80	225	6	18,2
	GE 180 ES2RS	180	260	105	80	225	6	18,2
	GE 180 ECR2RS	180	260	105	80	225	6	17,4
	GE 180 HS2RS	180	290	155	100	250	14	35,4
	GE 180 HCR2RS	180	290	155	100	250	14	33,6
200	**GE 200 ES**	200	290	130	100	250	7	28,3
	GE 200 ES2RS	200	290	130	100	250	7	28,3
	GE 200 ECR2RS	200	290	130	100	250	7	26
	GE 200 HS2RS	200	320	165	100	275	15	44,8
	GE 200 HCR2RS	200	320	165	100	275	15	44,7
220	**GE 220 ES**	220	320	135	100	275	8	35,4
	GE 220 ES2RS	220	320	135	100	275	8	35,4
	GE 220 ECR2RS	220	320	135	100	275	8	35,5
	GE 220 HS2RS	220	340	175	100	300	16	50,9
	GE 220 HCR2RS	220	340	175	100	300	16	50,8
240	**GE 240 ES**	240	340	140	100	300	8	39,4
	GE 240 ES2RS	240	340	140	100	300	8	39,4
	GE 240 ECR2RS	240	340	140	100	300	8	39
	GE 240 HS2RS	240	370	190	110	325	15	64,9
	GE 240 HCR2RS	240	370	190	110	325	15	64
260	**GE 260 ES**	260	370	150	110	325	7	51,1
	GE 260 ES2RS	260	370	150	110	325	7	51,1
	GE 260 ECR2RS	260	370	150	110	325	7	50,8
	GE 260 HS2RS	260	400	205	120	350	15	81,7
	GE 260 HCR2RS	260	400	205	120	350	15	81,8
280	**GE 280 ES**	280	400	155	120	350	6	64,6
	GE 280 ES2RS	280	400	155	120	350	6	64,6
	GE 280 ECR2RS	280	400	155	120	350	6	64,7
	GE 280 HS2RS	280	430	210	120	375	15	96,5
	GE 280 HCR2RS	280	430	210	120	375	15	96,5
300	**GE 300 ES**	300	430	165	120	375	7	77,3
	GE 300 ES2RS	300	430	165	120	375	7	77,3
	GE 300 ECR2RS	300	430	165	120	375	7	76,7
320	**GE 320 ES**	320	440	160	135	380	4	76,4
	GE 320 QCR	320	440	160	135	380	4	76

- warehouse - order - phone

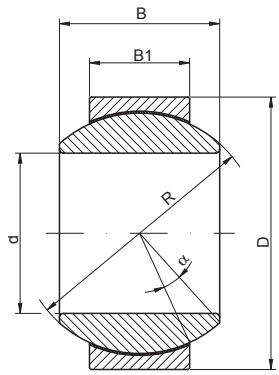

GE.. HCR

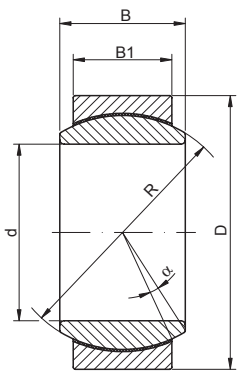

GE.. ECR

Basic load ratings [kN]		Basic makes*	Equivalent	Bearing No.
dyn. C	stat. C_0	-		
2010	4020		GE120 FW2RS	**GE 120 HCR2RS**
1080	5400		GE140 DO	**GE 140 ES**
1080	5400		GE140 DO2RS	**GE 140 ES2RS**
2010	4020		GE140 UK2RS	**GE 140 ECR2RS**
1370	6800		GE140 FO2RS	**GE 140 HS2RS**
2560	5120		GE140 FW2RS	**GE 140 HCR2RS**
1370	6800		GE160 DO	**GE 160 ES**
1370	6800		GE160 DO2RS	**GE 160 ES2RS**
2560	5120		GE160 UK2RS	**GE 160 ECR2RS**
1530	7650		GE160 FO2RS	**GE 160 HS2RS**
2880	5760		GE160 FW2RS	**GE 160 HCR2RS**
1530	7650		GE180 DO	**GE 180 ES**
1530	7650		GE180 DO2RS	**GE 180 ES2RS**
2880	5760		GE180 UK2RS	**GE 180 ECR2RS**
2120	10600		GE180 FO2RS	**GE 180 HS2RS**
4000	8000		GE180 FW2RS	**GE 180 HCR2RS**
2120	10600		GE200 DO	**GE 200 ES**
2120	10600		GE200 DO2RS	**GE 200 ES2RS**
4000	8000		GE200 UK2RS	**GE 200 ECR2RS**
2320	11600		GE200 FO2RS	**GE 200 HS2RS**
4400	8800		GE200 FW2RS	**GE 200 HCR2RS**
2320	11600		GE220 DO	**GE 220 ES**
2320	11600		GE220 DO2RS	**GE 220 ES2RS**
4400	8800		GE220 UK2RS	**GE 220 ECR2RS**
2550	12700		GE220 FO2RS	**GE 220 HS2RS**
4800	9600		GE220 FW2RS	**GE 220 HCR2RS**
2550	12700		GE240 DO	**GE 240 ES**
2550	12700		GE240 DO2RS	**GE 240 ES2RS**
4800	9600		GE240 UK2RS	**GE 240 ECR2RS**
3050	15300		GE240 FO2RS	**GE 240 HS2RS**
5700	11400		GE240 FW2RS	**GE 240 HCR2RS**
3050	15300		GE260 DO	**GE 260 ES**
3050	15300		GE260 DO2RS	**GE 260 ES2RS**
5700	11400		GE260 UK2RS	**GE 260 ECR2RS**
3550	18000		GE260 FO2RS	**GE 260 HS2RS**
6700	13400		GE260 FW2RS	**GE 260 HCR2RS**
3550	18000		GE280 DO	**GE 280 ES**
3550	18000		GE280 DO2RS	**GE 280 ES2RS**
6700	13400		GE280 UK2RS	**GE 280 ECR2RS**
3800	19000		GE280 FO2RS	**GE 280 HS2RS**
7200	14400		GE280 FW2RS	**GE 280 HCR2RS**
3800	19000		GE300 DO	**GE 300 ES**
3800	19000		GE300 DO2RS	**GE 300 ES2RS**
7200	14400		GE300 UK2RS	**GE 300 ECR2RS**
4400	22000		GE320 DO	**GE 320 ES**
10260	15390		GE320 DW	**GE 320 QCR**

* Other products also available



https://nppnovoteh.com

17. PLAIN BEARINGS

17.1. Radial spherical plain bearings



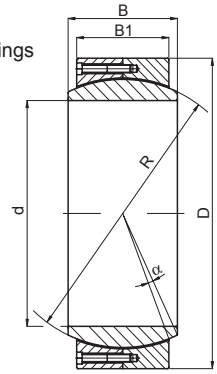

GE..

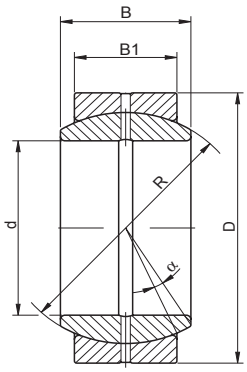

GE.. ES

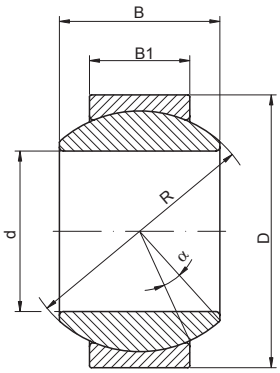

GE..HS

340 – 1000 mm

Shaft [mm]	Bearing No.	Dimensions [mm]						Weight [kg]
		d	D	B	B1	R	α	
340	**GE 340 ES**	340	460	160	135	400	3,8	81,6
	GE 340 QCR	340	460	160	135	400	3,8	80
360	**GE 360 ES**	360	480	160	135	420	3,6	84,2
	GE 360 QCR	360	480	160	135	420	3,6	86
380	**GE 380 ES**	380	520	190	160	450	4,1	129
	GE 380 QCR	380	520	190	160	450	4,1	124,5
400	**GE 400 ES**	400	540	190	160	470	3,9	133
	GE 400 QCR	400	540	190	160	470	3,9	131
420	**GE 420 ES**	420	560	190	160	490	3,7	138
	GE 420 QCR	420	560	190	160	490	3,7	143
440	**GE 440 ES**	440	600	218	185	520	3,9	198
	GE 440 QCR	440	600	218	185	520	3,9	194
460	**GE 460 ES**	460	620	218	185	540	3,7	200
	GE 460 QCR	460	620	218	185	540	3,7	199
480	**GE 480 ES**	480	650	230	195	565	3,8	237
	GE 480 QCR	480	650	230	195	565	3,8	234
500	**GE 500 ES**	500	670	230	195	585	3,6	244
	GE 500 QCR	500	670	230	195	585	3,6	243
530	**GE 530 ES**	530	710	243	205	620	3,7	289
	GE 530 QCR	530	710	243	205	620	3,7	291
560	**GE 560 ES**	560	750	258	215	655	4	325
	GE 560 QCR	560	750	258	215	655	4	342
600	**GE 600 ES**	600	800	272	230	700	3,6	407
	GE 600 QCR	600	800	272	230	700	3,6	409
630	**GE 630 ES**	630	850	300	260	740	3,3	525
670	**GE 670 ES**	670	900	308	260	785	3,7	594
710	**GE 710 ES**	710	950	325	275	830	3,7	693
750	**GE 750 ES**	750	1000	335	280	875	3,8	779
800	**GE 800 ES**	800	1060	355	300	930	3,6	920
850	**GE 850 ES**	850	1120	365	310	985	3,4	1047
900	**GE 900 ES**	900	1180	375	320	1040	3,2	1184
950	**GE 950 ES**	950	1250	400	340	1100	3,3	1420
1000	**GE 1000 ES**	1000	1320	438	370	1160	3,5	1742

- warehouse - order - phone

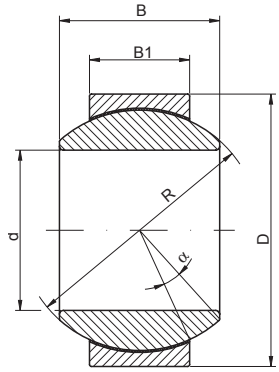

GE.. HCR

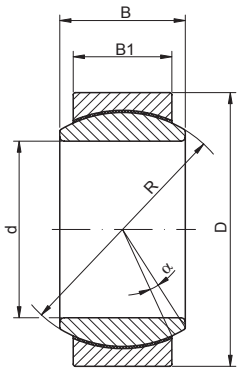

GE.. ECR

Basic load ratings [kN]		Basic makes*	Equivalent	Bearing No.
dyn. C	stat. C_0	-		
4650	23200	↷	GE340 DO	**GE 340 ES**
10800	16200	↷	GE340 DW	**GE 340 QCR**
4800	24000	↷	GE360 DO	**GE 360 ES**
11340	17010	↷	GE360 DW	**GE 360 QCR**
6300	31500	↷	GE380 DO	**GE 380 ES**
14400	21600	↷	GE380 DW	**GE 380 QCR**
6550	32500	↷	GE400 DO	**GE 400 ES**
15040	22560	↷	GE400 DW	**GE 400 QCR**
6800	34500	↷	GE420 DO	**GE 420 ES**
15680	23520	↷	GE420 DW	**GE 420 QCR**
8650	42300	↷	GE440 DO	**GE 440 ES**
19240	28860	↷	GE440 DW	**GE 440 QCR**
9000	45000	↷	GE460 DO	**GE 460 ES**
19980	29970	↷	GE460 DW	**GE 460 QCR**
9800	49000	↷	GE480 DO	**GE 480 ES**
22035	33050	↷	GE480 DW	**GE 480 QCR**
10200	51000	↷	GE500 DO	**GE 500 ES**
22815	34220	↷	GE500 DW	**GE 500 QCR**
11400	57000	↷	GE530 DO	**GE 530 ES**
25420	38130	↷	GE530 DW	**GE 530 QCR**
12700	64000	↷	GE560 DO	**GE 560 ES**
28165	42250	↷	GE560 DW	**GE 560 QCR**
14600	73500	↷	GE600 DO	**GE 600 ES**
32200	48300	↷	GE600 DW	**GE 600 QCR**
17600	88000	↷	GE630 DO	**GE 630 ES**
19000	95000	↷	GE670 DO	**GE 670 ES**
21200	106000	↷	GE710 DO	**GE 710 ES**
22800	114000	↷	GE750 DO	**GE 750 ES**
26000	129000	↷	GE800 DO	**GE 800 ES**
28500	143000	↷	GE850 DO	**GE 850 ES**
31000	156000	↷	GE900 DO	**GE 900 ES**
35500	176000	↷	GE950 DO	**GE 950 ES**
40500	196000	↷	GE1000 DO	**GE 1000 ES**

* Other products also available



https://nppnovoteh.com

17. PLAIN BEARINGS

17.2 Thrust spherical plain bearings



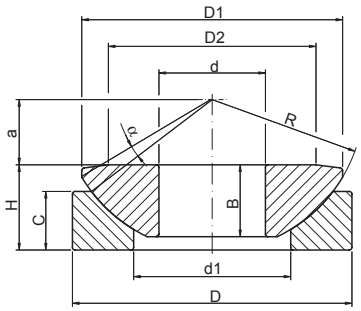

GE...AW

Shaft [mm]	Bearing No.	Dimensions [mm]										Angle [°]
		d	D	H	R	D1	D2	d1	B	C	a	α
10	**GW 010**	10	30	9,5	32	27,5	21	16,5	7,9	6	7	10
12	**GW 012**	12	35	13	37	32	24	19,5	9,3	9	8	9
15	**GW 015**	15	42	15	45	38,9	29	24	10,7	11	10	7
17	**GW 017**	17	47	16	50	43,4	34	28	11,5	11,5	11	6
20	**GW 020**	20	55	20	60	50	40	33,5	14,3	13	12,5	6
25	**GW 025**	25	62	22,5	66	57,5	45	34,5	16	17	14	7
30	**GW 030**	30	75	26	80	69	56	44	18	19,5	17,5	6
35	**GW 035**	35	90	28	98	84	66	52	22	20	22	6
40	**GW 040**	40	105	32	114	98	78	59	27	22	24,5	6
45	**GW 045**	45	120	36,5	130	112	89	68	31	25	27,5	6
50	**GW 050**	50	130	42,5	140	122,5	98	69	33,5	32	30	5
60	**GW 060**	60	150	45	160	140	108	86	37	33	35	7
70	**GW 070**	70	160	50	170	149,5	121	95	40	36	35	6
80	**GW 080**	80	180	50	194	168	130	108	42	36	42,5	6
100	**GW 100**	100	210	59	220	195,5	155	133	50	42	45	7
120	**GW 120**	120	230	64	245	214	170	154	52	45	52,5	8
140	**GW 140**	140	260	72	272	244	198	176	61	50	52,5	6
160	**GW 160**	160	290	77	310	272	213	199	65	52	65	7
180	**GW 180**	180	320	86	335	300	240	224	70	60	67,5	8
200	**GW 200**	200	340	87	358	321	265	246	74	60	70	8
220	**GW 220**	220	370	97	388	350	289	265	82	67	75	7
240	**GW 240**	240	400	103	420	382	314	294	87	73	77,5	6
260	**GW 260**	260	430	115	449	409	336	317	95	80	82,5	7
280	**GW 280**	280	460	110	480	445	366	337	100	85	80	4
300	**GW 300**	300	480	110	490	460	388	356	100	90	80	3,5
320	**GW 320**	320	520	116	540	500	405	380	105	91	95	4
340	**GW 340**	340	540	116	550	510	432	380	105	91	95	4
360	**GW 360**	360	560	125	575	535	452	400	115	95	95	4

- warehouse - order - phone

https://nppnovoteh.com

Weight [kg]	Basic load ratings [kN]		Basic makes*	Equivalent	Bearing No.
	dyn. C	stat. C_0	-		
0,038	49	98		GE 10 AW	**GW 010**
0,07	65	130		GE 12 AW	**GW 012**
0,12	105	210		GE 15 AW	**GW 015**
0,16	118	236		GE 17 AW	**GW 017**
0,26	150	300		GE 20 AW	**GW 020**
0,39	258	516		GE 25 AW	**GW 025**
0,65	340	680		GE 30 AW	**GW 030**
1	520	1040		GE 35 AW	**GW 035**
1,6	745	1490		GE 40 AW	**GW 040**
2,5	970	1940		GE 45 AW	**GW 045**
3,4	1300	2600		GE 50 AW	**GW 050**
4,7	1470	2940		GE 60 AW	**GW 060**
5,7	1600	3200		GE 70 AW	**GW 070**
7,2	2050	4100		GE 80 AW	**GW 080**
10,9	2400	4800		GE 100 AW	**GW 100**
13	2500	5000		GE 120 AW	**GW 120**
18,3	3250	6500		GE 140 AW	**GW 140**
23,8	3800	5700		GE 160 AW	**GW 160**
31,5	4250	6400		GE 180 AW	**GW 180**
34,7	4700	7100		GE 200 AW	**GW 200**
44,7	5700	8800		GE 220 AW	**GW 220**
56,9	6850	10400		GE 240 AW	**GW 240**
71,3	7200	10800		GE 260 AW	**GW 260**
84	11400	17000		GE 280 AW	**GW 280**
88,5	11500	17300		GE 300 AW	**GW 300**
111	14100	21200		GE 320 AW	**GW 320**
117	15800	23600		GE 340 AW	**GW 340**
132	17000	25500		GE 360 AW	**GW 360**

* Other products also available



17. PLAIN BEARINGS

17.3. Rod ends – type SA



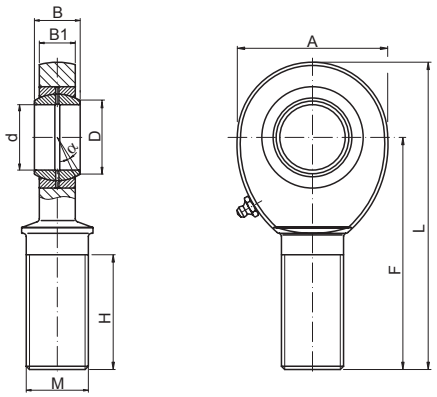

SA.. SAL..

Rod End No.	Dimensions [mm]								
	d	B	B1	A	F	L	D	M-bolt size	H
SA 05	5	8	6,00	18	33	42	7,7	M 5	20
SAL 05	5	8	6,00	18	33	42	7,7	M 5	20
SA 06	6	9	6,75	20	36	46	8,9	M 6	22
SAL 06	6	9	6,75	20	36	46	8,9	M 6	22
SA 08	8	12	9,00	24	42	54	10,4	M 8	25
SAL 08	8	12	9,00	24	42	54	10,4	M 8	25
SA 10	10	14	10,50	28	48	62	12,9	M 10	29
SAL 10	10	14	10,50	28	48	62	12,9	M 10	29
SA 12	12	16	12,00	32	54	70	15,4	M 12	33
SAL 12	12	16	12,00	32	54	70	15,4	M 12	33
SA 14	14	19	13,50	36	60	78	16,8	M 14	38
SAL 14	14	19	13,50	36	60	78	16,8	M 14	38
SA 16	16	21	15,00	42	66	87	19,3	M 16	40
SAL 16	16	21	15,00	42	66	87	19,3	M 16	40
SA 18	18	23	16,50	46	72	95	21,8	M 18x1,5	44
SAL 18	18	23	16,50	46	72	95	21,8	M 18x1,5	44
SA 20	20	25	18,00	50	78	103	24,3	M 20x1,5	47
SAL 20	20	25	18,00	50	78	103	24,3	M 20x1,5	47
SA 22	22	28	20,00	54	84	111	25,8	M 22x1,5	51
SAL 22	22	28	20,00	54	84	111	25,8	M 22x1,5	51
SA 25	25	31	22,00	60	94	124	29,6	M 24x2	58
SAL 25	25	31	22,00	60	94	124	29,6	M 24x2	58
SA 30	30	37	25,00	70	110	145	34,8	M 30x2	71
SAL 30	30	37	25,00	70	110	145	34,8	M 30x2	71
SA 35	35	43	28,00	80	125	165	37,7	M 36x2	77
SAL 35	35	43	28,00	80	125	165	37,7	M 36x2	77

- warehouse - order - phone

Weight [kg]	Basic makes*			Rod End No.
	T/K	SS/M	others	
0,013				**SA 05**
0,013				**SAL 05**
0,020				**SA 06**
0,020				**SAL 06**
0,033				**SA 08**
0,033				**SAL 08**
0,056				**SA 10**
0,056				**SAL 10**
0,087				**SA 12**
0,087				**SAL 12**
0,129				**SA 14**
0,129				**SAL 14**
0,189				**SA 16**
0,189				**SAL 16**
0,267				**SA 18**
0,267				**SAL 18**
0,348				**SA 20**
0,348				**SAL 20**
0,443				**SA 22**
0,443				**SAL 22**
0,600				**SA 25**
0,600				**SAL 25**
1,030				**SA 30**
1,030				**SAL 30**
1,600				**SA 35**
1,600				**SAL 35**

* Other products also available



https://nppnovoteh.com

17. PLAIN BEARINGS

17.4. Rod ends – type SI



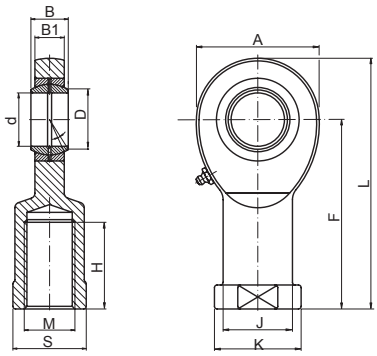

SI.. SIL..

Rod End No.	Dimensions [mm]											
	d	B	B1	A	F	L	K	J	D	S	M-bolt size	H
SI 05	5	8	6,00	18	27	36	11	9,0	7,7	9	M 5	10
SIL 05	5	8	6,00	18	27	36	11	9,0	7,7	9	M 5	10
SI 06	6	9	6,75	20	30	40	13	10,0	8,9	11	M 6	12
SIL 06	6	9	6,75	20	30	40	13	10,0	8,9	11	M 6	12
SI 08	8	12	9,00	24	36	48	16	12,5	10,4	13	M 8	16
SIL 08	8	12	9,00	24	36	48	16	12,5	10,4	13	M 8	16
SI 10	10	14	10,50	28	43	57	19	15,0	12,9	17	M 10	20
SIL 10	10	14	10,50	28	43	57	19	15,0	12,9	17	M 10	20
SI 12	12	16	12,00	32	50	66	22	17,5	15,4	19	M 12	22
SIL 12	12	16	12,00	32	50	66	22	17,5	15,4	19	M 12	22
SI 14	14	19	13,50	36	57	75	25	20,0	16,8	22	M 14	25
SIL 14	14	19	13,50	36	57	75	25	20,0	16,8	22	M 14	25
SI 16	16	21	15,00	42	64	85	27	22,0	19,3	22	M 16	28
SIL 16	16	21	15,00	42	64	85	27	22,0	19,3	22	M 16	28
SI 18	18	23	16,50	46	71	94	31	25,0	21,8	27	M 18x1,5	32
SIL 18	18	23	16,50	46	71	94	31	25,0	21,8	27	M 18x1,5	32
SI 20	20	25	18,00	50	77	102	34	27,5	24,3	32	M 20x1,5	33
SIL 20	20	25	18,00	50	77	102	34	27,5	24,3	32	M 20x1,5	33
SI 22	22	28	20,00	54	84	111	37	30,0	25,8	22	M 22x1,5	37
SIL 22	22	28	20,00	54	84	111	37	30,0	25,8	22	M 22x1,5	37
SI 25	25	31	22,00	60	94	124	42	33,5	29,6	36	M 24x2	42
SIL 25	25	31	22,00	60	94	124	42	33,5	29,6	36	M 24x2	42
SI 30	30	37	25,00	70	110	145	50	40,0	34,8	41	M 30x2	51
SIL 30	30	37	25,00	70	110	145	50	40,0	34,8	41	M 30x2	51
SI 35	35	43	28,00	80	125	165	58	46,0	37,7	50	M 36x2	56
SIL 35	35	43	28,00	80	125	165	58	46,0	37,7	50	M 36x2	56

- warehouse - order - phone

Weight [kg]	Basic makes*			Rod End No.
	T/K	SS/M	others	
0,018				**SI 05**
0,018				**SIL 05**
0,027				**SI 06**
0,027				**SIL 06**
0,046				**SI 08**
0,046				**SIL 08**
0,076				**SI 10**
0,076				**SIL 10**
0,115				**SI 12**
0,115				**SIL 12**
0,170				**SI 14**
0,170				**SIL 14**
0,230				**SI 16**
0,230				**SIL 16**
0,320				**SI 18**
0,320				**SIL 18**
0,415				**SI 20**
0,415				**SIL 20**
0,540				**SI 22**
0,540				**SIL 22**
0,750				**SI 25**
0,750				**SIL 25**
1,130				**SI 30**
1,130				**SIL 30**
1,600				**SI 35**
1,600				**SIL 35**

* Other products also available



17. PLAIN BEARINGS

17.5. Slide bearings – type TUP



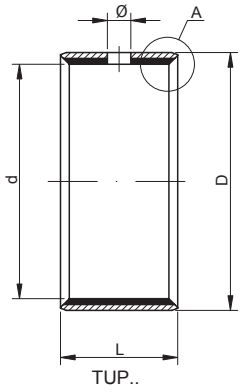

TUP..

6 – 16 mm

Shaft [mm]	Bearing No.	Dimensions [mm]									
		d	D	L	Shaft			housing		wall thickness	
					dw	tolerance		Dw	tolerance	min	max
6	**TUP1 06.06**	6	8	6	6	-0,013	-0,028	8	0,015	0,98	1,005
	TUP1 06.08	6	8	8	6	-0,013	-0,028	8	0,015	0,98	1,005
	TUP1 06.10	6	8	10	6	-0,013	-0,028	8	0,015	0,98	1,005
8	**TUP1 08.06**	8	10	6	8	-0,013	-0,028	10	0,015	0,98	1,005
	TUP1 08.08	8	10	8	8	-0,013	-0,028	10	0,015	0,98	1,005
	TUP1 08.10	8	10	10	8	-0,013	-0,028	10	0,015	0,98	1,005
	TUP1 08.12	8	10	12	8	-0,013	-0,028	10	0,015	0,98	1,005
	TUP1 08.15	8	10	15	8	-0,013	-0,028	10	0,015	0,98	1,005
10	**TUP1 10.06**	10	12	6	10	-0,016	-0,034	12	0,018	0,98	1,005
	TUP1 10.08	10	12	8	10	-0,016	-0,034	12	0,018	0,98	1,005
	TUP1 10.10	10	12	10	10	-0,016	-0,034	12	0,018	0,98	1,005
	TUP2 10.10	10	12	10	10	-0,022	-	12	0,018	0,955	0,98
	TUP1 10.12	10	12	12	10	-0,016	-0,034	12	0,018	0,98	1,005
	TUP1 10.15	10	12	15	10	-0,016	-0,034	12	0,018	0,98	1,005
	TUP2 10.15	10	12	15	10	-0,022	-	12	0,018	0,955	0,98
	TUP1 10.20	10	12	20	10	-0,016	-0,034	12	0,018	0,98	1,005
	TUP2 10.20	10	12	20	10	-0,022	-	12	0,018	0,955	0,98
12	**TUP1 12.06**	12	14	6	12	-0,016	-0,034	14	0,018	0,98	1,005
	TUP1 12.08	12	14	8	12	-0,016	-0,034	14	0,018	0,98	1,005
	TUP1 12.10	12	14	10	12	-0,016	-0,034	14	0,018	0,98	1,005
	TUP2 12.10	12	14	10	12	-0,027	-	14	0,018	0,955	0,98
	TUP1 12.12	12	14	12	12	-0,016	-0,034	14	0,018	0,98	1,005
	TUP1 12.15	12	14	15	12	-0,016	-0,034	14	0,018	0,98	1,005
	TUP2 12.15	12	14	15	12	-0,027	-	14	0,018	0,955	0,98
	TUP1 12.20	12	14	20	12	-0,016	-0,034	14	0,018	0,98	1,005
	TUP2 12.20	12	14	20	12	-0,027	-	14	0,018	0,955	0,98
	TUP1 12.25	12	14	25	12	-0,016	-0,034	14	0,018	0,98	1,005
13	**TUP1 13.10**	13	15	10	13	-0,016	-0,034	15	0,018	0,98	1,005
	TUP1 13.20	13	15	20	13	-0,016	-0,034	15	0,018	0,98	1,005
14	**TUP1 14.10**	14	16	10	14	-0,016	-0,034	16	0,018	0,98	1,005
	TUP1 14.12	14	16	12	14	-0,016	-0,034	16	0,018	0,98	1,005
	TUP1 14.15	14	16	15	14	-0,016	-0,034	16	0,018	0,98	1,005
	TUP2 14.15	14	16	15	14	-0,027	-	16	0,018	0,955	0,98
	TUP1 14.20	14	16	20	14	-0,016	-0,034	16	0,018	0,98	1,005
	TUP2 14.20	14	16	20	14	-0,027	-	16	0,018	0,955	0,98
	TUP1 14.25	14	16	25	14	-0,016	-0,034	16	0,018	0,98	1,005
15	**TUP1 15.10**	15	17	10	15	-0,016	-0,034	17	0,018	0,98	1,005
	TUP1 15.12	15	17	12	15	-0,016	-0,034	17	0,018	0,98	1,005
	TUP1 15.15	15	17	15	15	-0,016	-0,034	17	0,018	0,98	1,005
	TUP2 15.15	15	17	15	15	-0,027	-	17	0,018	0,955	0,98
	TUP1 15.20	15	17	20	15	-0,016	-0,034	17	0,018	0,98	1,005
	TUP2 15.20	15	17	20	15	-0,027	-	17	0,018	0,955	0,98
	TUP1 15.25	15	17	25	15	-0,016	-0,034	17	0,018	0,98	1,005
	TUP2 15.25	15	17	25	15	-0,027	-	17	0,018	0,955	0,98
16	**TUP1 16.10**	16	18	10	16	-0,016	-0,034	18	0,018	0,98	1,005
	TUP1 16.12	16	18	12	16	-0,016	-0,034	18	0,018	0,98	1,005
	TUP1 16.15	16	18	15	16	-0,016	-0,034	18	0,018	0,98	1,005
	TUP2 16.15	16	18	15	16	-0,027	-	18	0,018	0,955	0,98
	TUP1 16.20	16	18	20	16	-0,016	-0,034	18	0,018	0,98	1,005

- warehouse - order - phone

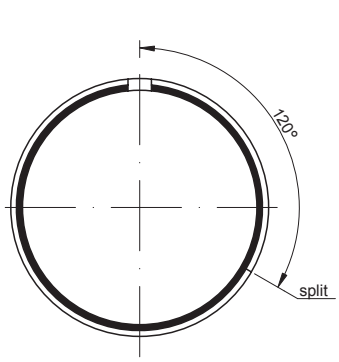

A

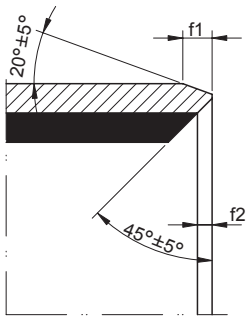

Dimensions [mm]			Weight [g]	Equivalent		Basic makes*	Bearing No.
Φ	f1	f2				-	
-	0,5	0,3	0,9	PAP0606 P10	KU0606		**TUP1 06.06**
-	0,5	0,3	1,4	PAP0608 P10	KU0608		**TUP1 06.08**
-	0,5	0,3	1,7	PAP0610 P10	KU0610		**TUP1 06.10**
-	0,5	0,3	1,3	-	KU0806		**TUP1 08.06**
-	0,5	0,3	1,7	PAP0808 P10	KU0808		**TUP1 08.08**
-	0,5	0,3	2,1	PAP0810 P10	KU0810		**TUP1 08.10**
-	0,5	0,3	2,5	PAP0812 P10	KU0812		**TUP1 08.12**
-	0,5	0,3	3,3	-	KU0815		**TUP1 08.15**
-	0,5	0,3	1,5	-	KU1006		**TUP1 10.06**
-	0,5	0,3	2	PAP1008 P10	KU1008		**TUP1 10.08**
-	0,5	0,3	2,5	PAP1010 P10	KU1010		**TUP1 10.10**
4	0,5	0,3	2,4	PAP1010 P20	KX1010		**TUP2 10.10**
-	0,5	0,3	2,9	PAP1012 P10	KU1012		**TUP1 10.12**
-	0,5	0,3	3,8	PAP1015 P10	KU1015		**TUP1 10.15**
4	0,5	0,3	3,6	PAP1015 P20	KX1015		**TUP2 10.15**
-	0,5	0,3	5,3	PAP1020 P10	KU1020		**TUP1 10.20**
4	0,5	0,3	4,8	-	KX1020		**TUP2 10.20**
-	0,5	0,3	1,5	-	KU1206		**TUP1 12.06**
-	0,5	0,3	2	PAP1208 P10	KU1208		**TUP1 12.08**
-	0,5	0,3	3	PAP1210 P10	KU1210		**TUP1 12.10**
4	0,5	0,3	2,9	PAP1210 P20	KX1210		**TUP2 12.10**
-	0,5	0,3	3,7	PAP1212 P10	KU1212		**TUP1 12.12**
-	0,5	0,3	4,7	PAP1215 P10	KU1215		**TUP1 12.15**
4	0,5	0,3	4,3	PAP1215 P20	KX1215		**TUP2 12.15**
-	0,5	0,3	6,1	PAP1220 P10	KU1220		**TUP1 12.20**
4	0,5	0,3	5,7	PAP1220 P20	KX1220		**TUP2 12.20**
-	0,5	0,3	7,6	PAP1225 P10	KU1225		**TUP1 12.25**
-	0,5	0,3	3,2	PAP1310 P10	KU1310		**TUP1 13.10**
-	0,5	0,3	6,4	-	KU1320		**TUP1 13.20**
-	0,5	0,3	3,5	PAP1410 P10	KU1410		**TUP1 14.10**
-	0,5	0,3	4,3	PAP1412 P10	KU1412		**TUP1 14.12**
-	0,5	0,3	5,4	PAP1415 P10	KU1415		**TUP1 14.15**
4	0,5	0,3	4,9	-	KX1415		**TUP2 14.15**
-	0,5	0,3	7,1	PAP1420 P10	KU1420		**TUP1 14.20**
4	0,5	0,3	6,6	PAP1420 P20	KX1420		**TUP2 14.20**
-	0,5	0,3	8,8	PAP1425 P10	KU1425		**TUP1 14.25**
-	0,5	0,3	3,7	PAP1510 P10	KU1510		**TUP1 15.10**
-	0,5	0,3	4,5	PAP1512 P10	KU1512		**TUP1 15.12**
-	0,5	0,3	5,7	PAP1515 P10	KU1515		**TUP1 15.15**
4	0,5	0,3	5,3	PAP1515 P20	KX1515		**TUP2 15.15**
-	0,5	0,3	7,6	PAP1520 P10	KU1520		**TUP1 15.20**
4	0,5	0,3	7	-	KX1520		**TUP2 15.20**
-	0,5	0,3	9,4	PAP1525 P10	KU1525		**TUP1 15.25**
4	0,5	0,3	8,8	PAP1525 P20	KX1525		**TUP2 15.25**
-	0,5	0,3	4	PAP1610 P10	KU1610		**TUP1 16.10**
-	0,5	0,3	4,8	PAP1612 P10	KU1612		**TUP1 16.12**
-	0,5	0,3	6,1	PAP1615 P10	KU1615		**TUP1 16.15**
4	0,5	0,3	5,6	PAP1615 P20	KX1615		**TUP2 16.15**
-	0,5	0,3	8,1	PAP1620 P10	KU1620		**TUP1 16.20**

* Other products also available

https://nppnovoteh.com

17. PLAIN BEARINGS

17.5. Slide bearings – type TUP



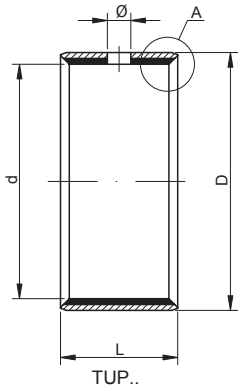

TUP..

16 – 28 mm

Shaft [mm]	Bearing No.	Dimensions [mm]									
		d	D	L	Shaft			housing		wall thickness	
					dw	tolerance		Dw	tolerance	min	max
16 cont.	**TUP2 16.20**	16	18	20	16	-0,027	-	18	0,018	0,955	0,98
	TUP1 16.25	16	18	25	16	-0,016	-0,034	18	0,018	0,98	1,005
	TUP2 16.25	16	18	25	16	-0,027	-	18	0,018	0,955	0,98
17	**TUP1 17.10**	17	19	10	17	-0,016	-0,034	19	0,018	0,98	1,005
	TUP1 17.12	17	19	12	17	-0,016	-0,034	19	0,018	0,98	1,005
	TUP1 17.20	17	19	20	17	-0,016	-0,034	19	0,018	0,98	1,005
18	**TUP1 18.10**	18	20	10	18	-0,020	-0,041	20	0,021	0,98	1,005
	TUP1 18.12	18	20	12	18	-0,020	-0,041	20	0,021	0,98	1,005
	TUP1 18.15	18	20	15	18	-0,020	-0,041	20	0,021	0,98	1,005
	TUP2 18.15	18	20	15	18	-0,027	-	20	0,021	0,955	0,98
	TUP1 18.20	18	20	20	18	-0,020	-0,041	20	0,021	0,98	1,005
	TUP2 18.20	18	20	20	18	-0,027	-	20	0,021	0,955	0,98
	TUP1 18.25	18	20	25	18	-0,020	-0,041	20	0,021	0,98	1,005
	TUP2 18.25	18	20	25	18	-0,027	-	20	0,021	0,955	0,98
20	**TUP1 20.10**	20	23	10	20	-0,020	-0,041	23	0,021	1,475	1,505
	TUP1 20.12	20	23	12	20	-0,020	-0,041	23	0,021	1,475	1,505
	TUP1 20.15	20	23	15	20	-0,020	-0,041	23	0,021	1,475	1,505
	TUP2 20.15	20	23	15	20	-0,033	-	23	0,021	1,445	1,475
	TUP1 20.20	20	23	20	20	-0,020	-0,041	23	0,021	1,475	1,505
	TUP2 20.20	20	23	20	20	-0,033	-	23	0,021	1,445	1,475
	TUP1 20.25	20	23	25	20	-0,020	-0,041	23	0,021	1,475	1,505
	TUP2 20.25	20	23	25	20	-0,033	-	23	0,021	1,445	1,475
	TUP1 20.30	20	23	30	20	-0,020	-0,041	23	0,021	1,475	1,505
	TUP2 20.30	20	23	30	20	-0,033	-	23	0,021	1,445	1,475
22	**TUP1 22.10**	22	25	10	22	-0,020	-0,041	25	0,021	1,475	1,505
	TUP1 22.12	22	25	12	22	-0,020	-0,041	25	0,021	1,475	1,505
	TUP1 22.15	22	25	15	22	-0,020	-0,041	25	0,021	1,475	1,505
	TUP2 22.15	22	25	15	22	-0,033	-	25	0,021	1,445	1,475
	TUP1 22.20	22	25	20	22	-0,020	-0,041	25	0,021	1,475	1,505
	TUP1 22.25	22	25	25	22	-0,020	-0,041	25	0,021	1,475	1,505
	TUP2 22.25	22	25	25	22	-0,033	-	25	0,021	1,445	1,475
	TUP1 22.30	22	25	30	22	-0,020	-0,041	25	0,021	1,475	1,505
24	**TUP1 24.15**	24	27	15	24	-0,020	-0,041	27	0,021	1,475	1,505
	TUP1 24.20	24	27	20	24	-0,020	-0,041	27	0,021	1,475	1,505
	TUP1 24.25	24	27	25	24	-0,020	-0,041	27	0,021	1,475	1,505
	TUP1 24.30	24	27	30	24	-0,020	-0,041	27	0,021	1,475	1,505
25	**TUP1 25.10**	25	28	10	25	-0,020	-0,041	28	0,021	1,475	1,505
	TUP1 25.12	25	28	12	25	-0,020	-0,041	28	0,021	1,475	1,505
	TUP1 25.15	25	28	15	25	-0,020	-0,041	28	0,021	1,475	1,505
	TUP2 25.15	25	28	15	25	-0,033	-	28	0,021	1,445	1,475
	TUP1 25.20	25	28	20	25	-0,020	-0,041	28	0,021	1,475	1,505
	TUP2 25.20	25	28	20	25	-0,033	-	28	0,021	1,445	1,475
	TUP1 25.25	25	28	25	25	-0,020	-0,041	28	0,021	1,475	1,505
	TUP2 25.25	25	28	25	25	-0,033	-	28	0,021	1,445	1,475
	TUP1 25.30	25	28	30	25	-0,020	-0,041	28	0,021	1,475	1,505
	TUP2 25.30	25	28	30	25	-0,033	-	28	0,021	1,445	1,475
	TUP1 25.40	25	28	40	25	-0,020	-0,041	28	0,021	1,475	1,505
	TUP1 25.50	25	28	50	25	-0,020	-0,041	28	0,021	1,475	1,505
28	**TUP1 28.15**	28	32	15	28	-0,020	-0,041	32	0,025	1,97	2,005

- warehouse - order - phone

A

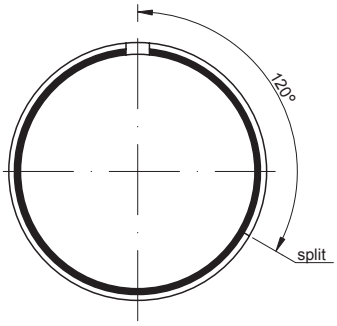

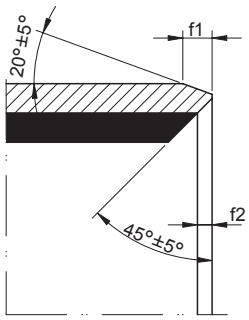

Dimensions [mm]			Weight [g]	Equivalent		Basic makes*	Bearing No.
Φ	f1	f2				-	
4	0,5	0,3	7,5	PAP1620 P20	KX1620		**TUP2 16.20**
-	0,5	0,3	10,1	PAP1625 P10	KU1625		**TUP1 16.25**
4	0,5	0,3	9,3	-	KX1625		**TUP2 16.25**
-	0,5	0,3	8,2	-	KU1710		**TUP1 17.10**
-	0,5	0,3	9,8	-	KU1712		**TUP1 17.12**
-	0,5	0,3	16,4	-	KU1720		**TUP1 17.20**
-	0,5	0,3	4,4	PAP1810 P10	KU1810		**TUP1 18.10**
-	0,5	0,3	5,3	-	KU1812		**TUP1 18.12**
-	0,5	0,3	6,7	PAP1815 P10	KU1815		**TUP1 18.15**
4	0,5	0,3	6,3	PAP1815 P20	KX1815		**TUP2 18.15**
-	0,5	0,3	8,9	PAP1820 P10	KU1820		**TUP1 18.20**
4	0,5	0,3	8,4	PAP1820 P20	KX1820		**TUP2 18.20**
-	0,5	0,3	11,1	PAP1825 P10	KU1825		**TUP1 18.25**
4	0,5	0,3	10,4	-	KX1825		**TUP2 18.25**
-	0,8	0,4	7,7	PAP2010 P10	KU2010		**TUP1 20.10**
-	0,8	0,4	9,2	-	KU2012		**TUP1 20.12**
-	0,8	0,4	11,1	PAP2015 P10	KU2015		**TUP1 20.15**
4	0,8	0,4	10,6	PAP2015 P20	KX2015		**TUP2 20.15**
-	0,8	0,4	15,1	PAP2020 P10	KU2020		**TUP1 20.20**
4	0,8	0,4	14,2	PAP2020 P20	KX2020		**TUP2 20.20**
-	0,8	0,4	19,1	PAP2025 P10	KU2025		**TUP1 20.25**
4	0,8	0,4	17,7	PAP2025 P20	KX2025		**TUP2 20.25**
-	0,8	0,4	23	PAP2030 P10	KU2030		**TUP1 20.30**
4	0,8	0,4	21,3	PAP2030 P20	KX2030		**TUP2 20.30**
-	0,8	0,4	8,3	-	KU2210		**TUP1 22.10**
-	0,8	0,4	10	-	KU2212		**TUP1 22.12**
-	0,8	0,4	12,7	PAP2215 P10	KU2215		**TUP1 22.15**
6	0,8	0,4	11,6	-	KX2215		**TUP2 22.15**
-	0,8	0,4	16,6	PAP2220 P10	KU2220		**TUP1 22.20**
-	0,8	0,4	21,1	PAP2225 P10	KU2225		**TUP1 22.25**
6	0,8	0,4	19,4	-	KX2225		**TUP2 22.25**
-	0,8	0,4	25,2	PAP2230 P10	KU2230		**TUP1 22.30**
-	0,8	0,4	13,5	PAP2415 P10	KU2415		**TUP1 24.15**
-	0,8	0,4	17,9	PAP2420 P10	KU2420		**TUP1 24.20**
-	0,8	0,4	22,8	PAP2425 P10	KU2425		**TUP1 24.25**
-	0,8	0,4	27,1	PAP2430 P10	KU2430		**TUP1 24.30**
-	0,8	0,4	9,6	PAP2510 P10	KU2510		**TUP1 25.10**
-	0,8	0,4	11,5	-	KU2512		**TUP1 25.12**
-	0,8	0,4	14,2	PAP2515 P10	KU2515		**TUP1 25.15**
6	0,8	0,4	13,1	PAP2515 P20	KX2515		**TUP2 25.15**
-	0,8	0,4	19	PAP2520 P10	KU2520		**TUP1 25.20**
6	0,8	0,4	17,5	PAP2520 P20	KX2520		**TUP2 25.20**
-	0,8	0,4	23,9	PAP2525 P10	KU2525		**TUP1 25.25**
6	0,8	0,4	21,9	PAP2525 P20	KX2525		**TUP2 25.25**
-	0,8	0,4	28,4	PAP2530 P10	KU2530		**TUP1 25.30**
6	0,8	0,4	26,2	PAP2530 P20	KX2530		**TUP2 25.30**
-	0,8	0,4	38	PAP2540 P10	KU2540		**TUP1 25.40**
-	0,8	0,4	47,7	PAP2550 P10	KU2550		**TUP1 25.50**
-	1,0	0,5	21,6	-	KU2815		**TUP1 28.15**

* Other products also available

https://nppnovoteh.com

17. PLAIN BEARINGS

17.5. Slide bearings – type TUP



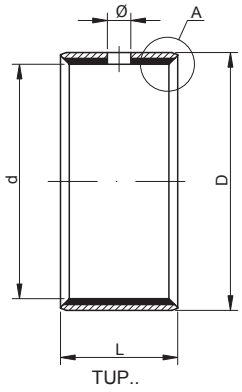

TUP..

28 – 45 mm

Shaft [mm]	Bearing No.	Dimensions [mm]									
		d	D	L	Shaft			housing		wall thickness	
					dw	tolerance		Dw	tolerance	min	max
28 cont.	**TUP1 28.20**	28	32	20	28	-0,020	-0,041	32	0,025	1,97	2,005
	TUP2 28.20	28	32	20	28	-0,033	-	32	0,025	1,935	1,97
	TUP1 28.25	28	32	25	28	-0,020	-0,041	32	0,025	1,97	2,005
	TUP1 28.30	28	32	30	28	-0,020	-0,041	32	0,025	1,97	2,005
	TUP2 28.30	28	32	30	28	-0,033	-	32	0,025	1,935	1,97
	TUP1 28.40	28	32	40	28	-0,020	-0,041	32	0,025	1,97	2,005
30	**TUP1 30.12**	30	34	12	30	-0,025	-0,050	34	0,025	1,97	2,005
	TUP1 30.15	30	34	15	30	-0,025	-0,050	34	0,025	1,97	2,005
	TUP1 30.20	30	34	20	30	-0,025	-0,050	34	0,025	1,97	2,005
	TUP2 30.20	30	34	20	30	-0,033	-	34	0,025	1,935	1,97
	TUP1 30.25	30	34	25	30	-0,025	-0,050	34	0,025	1,97	2,005
	TUP2 30.25	30	34	25	30	-0,033	-	34	0,025	1,935	1,97
	TUP1 30.30	30	34	30	30	-0,025	-0,050	34	0,025	1,97	2,005
	TUP2 30.30	30	34	30	30	-0,033	-	34	0,025	1,935	1,97
	TUP1 30.40	30	34	40	30	-0,025	-0,050	34	0,025	1,97	2,005
	TUP2 30.40	30	34	40	30	-0,033	-	34	0,025	1,935	1,97
32	**TUP1 32.20**	32	36	20	32	-0,025	-0,050	36	0,025	1,97	2,005
	TUP1 32.30	32	36	30	32	-0,025	-0,050	36	0,025	1,97	2,005
	TUP1 32.40	32	36	40	32	-0,025	-0,050	36	0,025	1,97	2,005
35	**TUP1 35.12**	35	39	12	35	-0,025	-0,050	39	0,025	1,97	2,005
	TUP1 35.15	35	39	15	35	-0,025	-0,050	39	0,025	1,97	2,005
	TUP1 35.20	35	39	20	35	-0,025	-0,050	39	0,025	1,97	2,005
	TUP2 35.20	35	39	20	35	-0,039	-	39	0,025	1,935	1,97
	TUP1 35.25	35	39	25	35	-0,025	-0,050	39	0,025	1,97	2,005
	TUP1 35.30	35	39	30	35	-0,025	-0,050	39	0,025	1,97	2,005
	TUP2 35.30	35	39	30	35	-0,039	-	39	0,025	1,935	1,97
	TUP2 35.35	35	39	35	35	-0,039	-	39	0,025	1,935	1,97
	TUP1 35.40	35	39	40	35	-0,025	-0,050	39	0,025	1,97	2,005
	TUP2 35.40	35	39	40	35	-0,039	-	39	0,025	1,935	1,97
	TUP1 35.50	35	39	50	35	-0,025	-0,050	39	0,025	1,97	2,005
38	**TUP1 38.15**	38	42	15	38	-0,025	-0,050	42	0,025	1,97	2,005
	TUP1 38.30	38	42	30	38	-0,025	-0,050	42	0,025	1,97	2,005
	TUP1 38.40	38	42	40	38	-0,025	-0,050	42	0,025	1,97	2,005
40	**TUP1 40.12**	40	44	12	40	-0,025	-0,050	44	0,025	1,97	2,005
	TUP1 40.20	40	44	20	40	-0,025	-0,050	44	0,025	1,97	2,005
	TUP2 40.20	40	44	20	40	-0,039	-	44	0,025	1,935	1,97
	TUP1 40.25	40	44	25	40	-0,025	-0,050	44	0,025	1,97	2,005
	TUP1 40.30	40	44	30	40	-0,025	-0,050	44	0,025	1,97	2,005
	TUP2 40.30	40	44	30	40	-0,039	-	44	0,025	1,935	1,97
	TUP1 40.40	40	44	40	40	-0,025	-0,050	44	0,025	1,97	2,005
	TUP2 40.40	40	44	40	40	-0,039	-	44	0,025	1,935	1,97
	TUP1 40.50	40	44	50	40	-0,025	-0,050	44	0,025	1,97	2,005
	TUP2 40.50	40	44	50	40	-0,039	-	44	0,025	1,935	1,97
45	**TUP1 45.20**	45	50	20	45	-0,025	-0,050	50	0,025	2,46	2,505
	TUP2 45.20	45	50	20	45	-0,039	-	50	0,025	2,415	2,46
	TUP1 45.25	45	50	25	45	-0,025	-0,050	50	0,025	2,46	2,505
	TUP1 45.30	45	50	30	45	-0,025	-0,050	50	0,025	2,46	2,505
	TUP2 45.30	45	50	30	45	-0,039	-	50	0,025	2,415	2,46
	TUP1 45.40	45	50	40	45	-0,025	-0,050	50	0,025	2,46	2,505
	TUP2 45.40	45	50	40	45	-0,039	-	50	0,025	2,415	2,46

- warehouse - order - phone

A

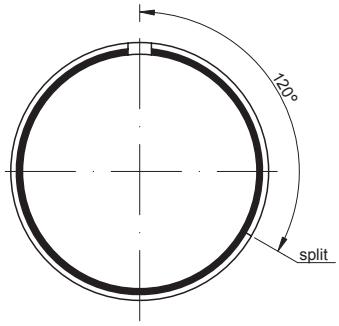

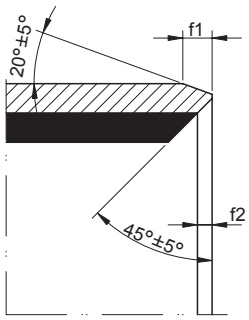

Dimensions [mm]			Weight [g]	Equivalent		Basic makes*	Bearing No.
Φ	f1	f2				-	
-	1,0	0,5	28,8	PAP2820 P10	KU2820		**TUP1 28.20**
6	1	0,5	26,4	-	KX2820		**TUP2 28.20**
-	1,0	0,5	36	-	KU2825		**TUP1 28.25**
-	1,0	0,5	44	PAP2830 P10	KU2830		**TUP1 28.30**
6	1	0,5	39,6	PAP2830 P20	KX2830		**TUP2 28.30**
-	1,0	0,5	58,5	-	KU2840		**TUP1 28.40**
-	1,0	0,5	18	-	KU3012		**TUP1 30.12**
-	1,0	0,5	23	PAP3015 P10	KU3015		**TUP1 30.15**
-	1,0	0,5	31	PAP3020 P10	KU3020		**TUP1 30.20**
6	1	0,5	28,1	PAP3020 P20	KX3020		**TUP2 30.20**
-	1,0	0,5	39	PAP3025 P10	KU3025		**TUP1 30.25**
6	1	0,5	35,2	PAP3025 P20	KX3025		**TUP2 30.25**
-	1,0	0,5	46	PAP3030 P10	KU3030		**TUP1 30.30**
6	1	0,5	42,2	PAP3030 P20	KX3030		**TUP2 30.30**
-	1,0	0,5	63	PAP3040 P10	KU3040		**TUP1 30.40**
6	1	0,5	56	PAP3040 P20	KX3040		**TUP2 30.40**
-	1,0	0,5	33	-	KU3220		**TUP1 32.20**
-	1,0	0,5	49	PAP3230 P10	KU3230		**TUP1 32.30**
-	1,0	0,5	65	PAP3240 P10	KU3240		**TUP1 32.40**
-	1,0	0,5	21	-	KU3512		**TUP1 35.12**
-	1,0	0,5	26	-	KU3515		**TUP1 35.15**
-	1,0	0,5	35	PAP3520 P10	KU3520		**TUP1 35.20**
6	1	0,5	33	PAP3520 P20	KX3520		**TUP2 35.20**
-	1,0	0,5	42	-	KU3525		**TUP1 35.25**
-	1,0	0,5	53	PAP3530 P10	KU3530		**TUP1 35.30**
6	1	0,5	49	PAP3530 P20	KX3530		**TUP2 35.30**
6	1	0,5	57	-	KX3535		**TUP2 35.35**
-	1,0	0,5	71	PAP3540 P10	KU3540		**TUP1 35.40**
6	1	0,5	65	-	KX3540		**TUP2 35.40**
-	1,0	0,5	89	PAP3550 P10	KU3550		**TUP1 35.50**
-	1,0	0,5	28	-	KU3815		**TUP1 38.15**
-	1,0	0,5	56	-	KU3830		**TUP1 38.30**
-	1,0	0,5	75	-	KU3840		**TUP1 38.40**
-	1,0	0,5	27	-	KU4012		**TUP1 40.12**
-	1,0	0,5	40	PAP4020 P10	KU4020		**TUP1 40.20**
8	1	0,5	37	PAP4020 P20	KX4020		**TUP2 40.20**
-	1,0	0,5	55	-	KU4025		**TUP1 40.25**
-	1,0	0,5	60	PAP4030 P10	KU4030		**TUP1 40.30**
8	1	0,5	55	PAP4030 P20	KX4030		**TUP2 40.30**
-	1,0	0,5	81	PAP4040 P10	KU4040		**TUP1 40.40**
8	1	0,5	74	PAP4040 P20	KX4040		**TUP2 40.40**
-	1,0	0,5	101	PAP4050 P10	KU4050		**TUP1 40.50**
8	1	0,5	92	PAP4050 P20	KX4050		**TUP2 40.50**
-	1,2	0,6	56	-	KU4520		**TUP1 45.20**
8	1,2	0,6	52	-	KX4520		**TUP2 45.20**
-	1,2	0,6	72	-	KU4525		**TUP1 45.25**
-	1,2	0,6	86	PAP4530 P10	KU4530		**TUP1 45.30**
8	1,2	0,6	78	-	KX4530		**TUP2 45.30**
-	1,2	0,6	113	PAP4540 P10	KU4540		**TUP1 45.40**
8	1,2	0,6	104	PAP4540 P20	KX4540		**TUP2 45.40**

* Other products also available

https://nppnovoteh.com

17. PLAIN BEARINGS

17.5. Slide bearings – type TUP



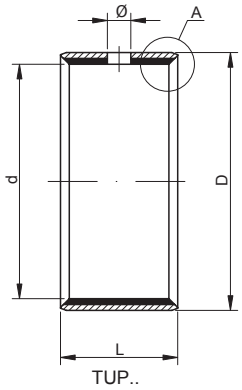

TUP..

45 – 75 mm

Shaft [mm]	Bearing No.	Dimensions [mm]									
		d	D	L	Shaft			housing		wall thickness	
					dw	tolerance		Dw	tolerance	min	max
45 cont.	**TUP2 45.45**	45	50	45	45	-0,039	-	50	0,025	2,415	2,46
	TUP1 45.50	45	50	50	45	-0,025	-0,050	50	0,025	2,46	2,505
	TUP2 45.50	45	50	50	45	-0,039	-	50	0,025	2,415	2,46
50	**TUP1 50.20**	50	55	20	50	-0,030	-0,060	55	0,03	2,46	2,505
	TUP1 50.30	50	55	30	50	-0,030	-0,060	55	0,03	2,46	2,505
	TUP2 50.30	50	55	30	50	-0,046	-	55	0,03	2,415	2,46
	TUP1 50.40	50	55	40	50	-0,030	-0,060	55	0,03	2,46	2,505
	TUP2 50.40	50	55	40	50	-0,046	-	55	0,03	2,415	2,46
	TUP1 50.50	50	55	50	50	-0,030	-0,060	55	0,03	2,46	2,505
	TUP2 50.50	50	55	50	50	-0,046	-	55	0,03	2,415	2,46
	TUP2 50.55	50	55	55	50	-0,046	-	55	0,03	2,415	2,46
	TUP1 50.60	50	55	60	50	-0,030	-0,060	55	0,03	2,46	2,505
	TUP2 50.60	50	55	60	50	-0,046	-	55	0,03	2,415	2,46
55	**TUP1 55.30**	55	60	30	55	-0,030	-0,060	60	0,03	2,46	2,505
	TUP2 55.30	55	60	30	55	-0,046	-	60	0,03	2,415	2,46
	TUP1 55.40	55	60	40	55	-0,030	-0,060	60	0,03	2,46	2,505
	TUP2 55.40	55	60	40	55	-0,046	-	60	0,03	2,415	2,46
	TUP1 55.50	55	60	50	55	-0,030	-0,060	60	0,03	2,46	2,505
	TUP2 55.50	55	60	50	55	-0,046	-	60	0,03	2,415	2,46
	TUP1 55.60	55	60	60	55	-0,030	-0,060	60	0,03	2,46	2,505
	TUP2 55.60	55	60	60	55	-0,046	-	60	0,03	2,415	2,46
60	**TUP1 60.30**	60	65	30	60	-0,030	-0,060	65	0,03	2,46	2,505
	TUP2 60.30	60	65	30	60	-0,046	-	65	0,03	2,415	2,46
	TUP1 60.40	60	65	40	60	-0,030	-0,060	65	0,03	2,46	2,505
	TUP2 60.40	60	65	40	60	-0,046	-	65	0,03	2,415	2,46
	TUP1 60.50	60	65	50	60	-0,030	-0,060	65	0,03	2,46	2,505
	TUP2 60.50	60	65	50	60	-0,046	-	65	0,03	2,415	2,46
	TUP1 60.60	60	65	60	60	-0,030	-0,060	65	0,03	2,46	2,505
	TUP2 60.60	60	65	60	60	-0,046	-	65	0,03	2,415	2,46
	TUP1 60.70	60	65	70	60	-0,030	-0,060	65	0,03	2,46	2,505
65	**TUP1 65.30**	65	70	30	65	-0,030	-0,060	70	0,03	2,46	2,505
	TUP1 65.40	65	70	40	65	-0,030	-0,060	70	0,03	2,46	2,505
	TUP2 65.40	65	70	40	65	-0,046	-	70	0,03	2,415	2,46
	TUP1 65.50	65	70	50	65	-0,030	-0,060	70	0,03	2,46	2,505
	TUP1 65.60	65	70	60	65	-0,030	-0,060	70	0,03	2,46	2,505
	TUP2 65.60	65	70	60	65	-0,046	-	70	0,03	2,415	2,46
	TUP1 65.70	65	70	70	65	-0,030	-0,060	70	0,03	2,46	2,505
70	**TUP1 70.40**	70	75	40	70	-0,030	-0,060	75	0,03	2,46	2,505
	TUP2 70.40	70	75	40	70	-0,046	-	75	0,03	2,415	2,46
	TUP1 70.50	70	75	50	70	-0,030	-0,060	75	0,03	2,46	2,505
	TUP2 70.50	70	75	50	70	-0,046	-	75	0,03	2,415	2,46
	TUP1 70.60	70	75	60	70	-0,030	-0,060	75	0,03	2,46	2,505
	TUP2 70.65	70	75	65	70	-0,046	-	75	0,03	2,415	2,46
	TUP1 70.70	70	75	70	70	-0,030	-0,060	75	0,03	2,46	2,505
	TUP1 70.80	70	75	80	70	-0,030	-0,060	75	0,03	2,46	2,505
	TUP2 70.80	70	75	80	70	-0,046	-	75	0,03	2,415	2,46
75	**TUP1 75.30**	75	80	30	75	-0,030	-0,060	80	0,03	2,46	2,505
	TUP1 75.40	75	80	40	75	-0,030	-0,060	80	0,03	2,46	2,505
	TUP2 75.40	75	80	40	75	-0,046	-	80	0,03	2,415	2,46
	TUP1 75.50	75	80	50	75	-0,030	-0,060	80	0,03	2,46	2,505

- warehouse - order - phone

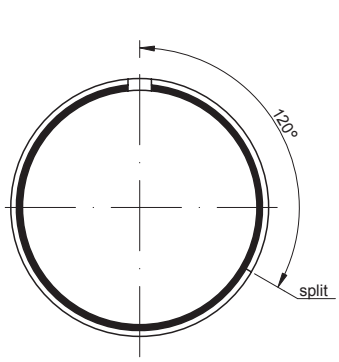

A

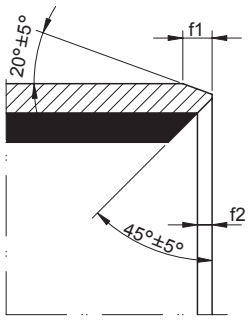

Dimensions [mm]			Weight [g]	Equivalent		Basic makes*	Bearing No.
Φ	f1	f2				-	
8	1,2	0,6	118	-	KX4545		**TUP2 45.45**
-	1,2	0,6	144	PAP4550 P10	KU4550		**TUP1 45.50**
8	1,2	0,6	131	PAP4550 P20	KX4550		**TUP2 45.50**
-	1,2	0,6	63	PAP5020 P10	KU5020		**TUP1 50.20**
-	1,2	0,6	95	PAP5030 P10	KU5030		**TUP1 50.30**
8	1,2	0,6	87	-	KX5030		**TUP2 50.30**
-	1,2	0,6	127	PAP5040 P10	KU5040		**TUP1 50.40**
8	1,2	0,6	115	PAP5040 P20	KX5040		**TUP2 50.40**
-	1,2	0,6	157	-	KU5050		**TUP1 50.50**
8	1,2	0,6	144	-	KX5050		**TUP2 50.50**
8	1,2	0,6	159	-	KX5055		**TUP2 50.55**
-	1,2	0,6	188	PAP5060 P10	KU5060		**TUP1 50.60**
8	1,2	0,6	173	PAP5060 P20	KX5060		**TUP2 50.60**
-	1,2	0,6	103	-	KU5530		**TUP1 55.30**
8	1,2	0,6	95	-	KX5530		**TUP2 55.30**
-	1,2	0,6	138	PAP5540 P10	KU5540		**TUP1 55.40**
8	1,2	0,6	126	PAP5540 P20	KX5540		**TUP2 55.40**
-	1,2	0,6	172	-	KU5550		**TUP1 55.50**
8	1,2	0,6	158	-	KX5550		**TUP2 55.50**
-	1,2	0,6	207	PAP5560 P10	KU5560		**TUP1 55.60**
8	1,2	0,6	190	-	KX5560		**TUP2 55.60**
-	1,2	0,6	113	PAP6030 P10	KU6030		**TUP1 60.30**
8	1,2	0,6	103	PAP6030 P20	KX6030		**TUP2 60.30**
-	1,2	0,6	150	PAP6040 P10	KU6040		**TUP1 60.40**
8	1,2	0,6	137	PAP6040 P20	KX6040		**TUP2 60.40**
-	1,2	0,6	188	-	KU6050		**TUP1 60.50**
8	1,2	0,6	172	-	KX6050		**TUP2 60.50**
-	1,2	0,6	226	PAP6060 P10	KU6060		**TUP1 60.60**
8	1,2	0,6	206	PAP6060 P20	KX6060		**TUP2 60.60**
-	1,2	0,6	265	PAP6070 P10	KU6070		**TUP1 60.70**
-	1,2	0,6	122	-	KU6530		**TUP1 65.30**
-	1,2	0,6	164	PAP6540 P10	KU6540		**TUP1 65.40**
8	1,2	0,6	148	-	KX6540		**TUP2 65.40**
-	1,2	0,6	204	PAP6550 P10	KU6550		**TUP1 65.50**
-	1,2	0,6	244	PAP6560 P10	KU6560		**TUP1 65.60**
8	1,2	0,6	223	-	KX6560		**TUP2 65.60**
-	1,2	0,6	284	PAP6570 P10	KU6570		**TUP1 65.70**
-	1,2	0,6	174	PAP7040 P10	KU7040		**TUP1 70.40**
8	1,2	0,6	159	PAP7040 P20	KX7040		**TUP2 70.40**
-	1,2	0,6	218	PAP7050 P10	KU7050		**TUP1 70.50**
8	1,2	0,6	199	PAP7050 P20	KX7050		**TUP2 70.50**
-	1,2	0,6	262	-	KU7060		**TUP1 70.60**
8	1,2	0,6	259	-	KX7065		**TUP2 70.65**
-	1,2	0,6	305	PAP7070 P10	KU7070		**TUP1 70.70**
-	1,2	0,6	349	-	KU7080		**TUP1 70.80**
8	1,2	0,6	319	-	KX7080		**TUP2 70.80**
-	1,2	0,6	140	-	KU7530		**TUP1 75.30**
-	1,2	0,6	187	PAP7540 P10	KU7540		**TUP1 75.40**
9,5	1,2	0,6	170	PAP7540 P20	KX7540		**TUP2 75.40**
-	1,2	0,6	233	PAP7550 P10	KU7550		**TUP1 75.50**

* Other products also available

17. PLAIN BEARINGS

17.5. Slide bearings – type TUP



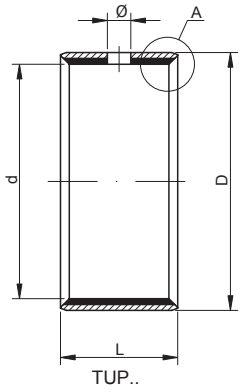

TUP..

75 – 105 mm

Shaft [mm]	Bearing No.	Dimensions [mm]									
		d	D	L	Shaft			housing		wall thickness	
					dw	tolerance		Dw	tolerance	min	max
75 cont.	**TUP1 75.60**	75	80	60	75	-0,030	-0,060	80	0,03	2,46	2,505
	TUP2 75.60	75	80	60	75	-0,046	-	80	0,03	2,415	2,46
	TUP1 75.70	75	80	70	75	-0,030	-0,060	80	0,03	2,46	2,505
	TUP1 75.80	75	80	80	75	-0,030	-0,060	80	0,03	2,46	2,505
	TUP2 75.80	75	80	80	75	-0,046	-	80	0,03	2,415	2,46
80	**TUP1 80.40**	80	85	40	80	-0,035	-	85	0,035	2,44	2,49
	TUP2 80.40	80	85	40	80	-0,046	-	85	0,035	2,385	2,45
	TUP1 80.50	80	85	50	80	-0,035	-	85	0,035	2,44	2,49
	TUP1 80.60	80	85	60	80	-0,035	-	85	0,035	2,44	2,49
	TUP2 80.60	80	85	60	80	-0,046	-	85	0,035	2,385	2,45
	TUP1 80.70	80	85	70	80	-0,035	-	85	0,035	2,44	2,49
	TUP1 80.80	80	85	80	80	-0,035	-	85	0,035	2,44	2,49
	TUP2 80.80	80	85	80	80	-0,046	-	85	0,035	2,385	2,45
	TUP1 80.100	80	85	100	80	-0,035	-	85	0,035	2,44	2,49
85	**TUP1 85.40**	85	90	40	85	-0,035	-	90	0,035	2,44	2,49
	TUP2 85.40	85	90	40	85	-0,054	-	90	0,035	2,385	2,45
	TUP1 85.60	85	90	60	85	-0,035	-	90	0,035	2,44	2,49
	TUP2 85.60	85	90	60	85	-0,054	-	90	0,035	2,385	2,45
	TUP1 85.80	85	90	80	85	-0,035	-	90	0,035	2,44	2,49
	TUP2 85.80	85	90	80	85	-0,054	-	90	0,035	2,385	2,45
	TUP1 85.100	85	90	100	85	-0,035	-	90	0,035	2,44	2,49
90	**TUP1 90.40**	90	95	40	90	-0,035	-	95	0,035	2,44	2,49
	TUP2 90.40	90	95	40	90	-0,054	-	95	0,035	2,385	2,45
	TUP1 90.50	90	95	50	90	-0,035	-	95	0,035	2,44	2,49
	TUP1 90.60	90	95	60	90	-0,035	-	95	0,035	2,44	2,49
	TUP2 90.60	90	95	60	90	-0,054	-	95	0,035	2,385	2,45
	TUP1 90.80	90	95	80	90	-0,035	-	95	0,035	2,44	2,49
	TUP2 90.80	90	95	80	90	-0,054	-	95	0,035	2,385	2,45
	TUP2 90.90	90	95	90	90	-0,054	-	95	0,035	2,385	2,45
	TUP1 90.100	90	95	100	90	-0,035	-	95	0,035	2,44	2,49
95	**TUP1 95.20**	95	100	20	95	-0,035	-	100	0,035	2,44	2,49
	TUP1 95.50	95	100	50	95	-0,035	-	100	0,035	2,44	2,49
	TUP1 95.60	95	100	60	95	-0,035	-	100	0,035	2,44	2,49
	TUP1 95.80	95	100	80	95	-0,035	-	100	0,035	2,44	2,49
	TUP1 95.100	95	100	100	95	-0,035	-	100	0,035	2,44	2,49
100	**TUP1 100.50**	100	105	50	100	-0,035	-	105	0,035	2,44	2,49
	TUP2 100.50	100	105	50	100	-0,054	-	105	0,035	2,385	2,45
	TUP1 100.60	100	105	60	100	-0,035	-	105	0,035	2,44	2,49
	TUP1 100.80	100	105	80	100	-0,035	-	105	0,035	2,44	2,49
	TUP2 100.80	100	105	80	100	-0,054	-	105	0,035	2,385	2,45
	TUP2 100.95	100	105	95	100	-0,054	-	105	0,035	2,385	2,45
	TUP1 100.115	100	105	115	100	-0,035	-	105	0,035	2,44	2,49
105	**TUP1 105.60**	105	110	60	105	-0,035	-	110	0,035	2,44	2,49
	TUP2 105.60	105	110	60	105	-0,054	-	110	0,035	2,385	2,45
	TUP1 105.80	105	110	80	105	-0,035	-	110	0,035	2,44	2,49
	TUP2 105.80	105	110	80	105	-0,054	-	110	0,035	2,385	2,45
	TUP2 105.95	105	110	95	105	-0,054	-	110	0,035	2,385	2,45
	TUP2 105.110	105	110	110	105	-0,054	-	110	0,035	2,385	2,45
	TUP1 105.115	105	110	115	105	-0,035	-	110	0,035	2,44	2,49

A

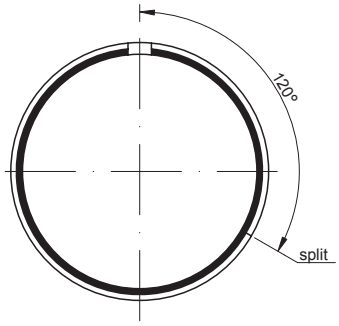

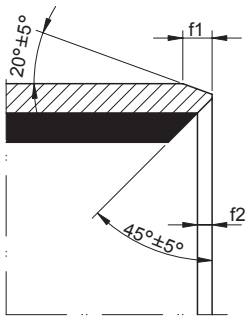

Dimensions [mm]			Weight [g]	Equivalent		Basic makes*	Bearing No.
Φ	f1	f2				-	
-	1,2	0,6	280	PAP7560 P10	KU7560		**TUP1 75.60**
9,5	1,2	0,6	256	-	KX7560		**TUP2 75.60**
-	1,2	0,6	327	-	KU7570		**TUP1 75.70**
-	1,2	0,6	374	PAP7580 P10	KU7580		**TUP1 75.80**
9,5	1,2	0,6	341	PAP7580 P20	KX7580		**TUP2 75.80**
-	1,4	0,7	197	PAP8040 P10	KU8040		**TUP1 80.40**
9,5	1,4	0,7	181	PAP8040 P20	KX8040		**TUP2 80.40**
-	1,4	0,7	246	-	KU8050		**TUP1 80.50**
-	1,4	0,7	297	PAP8060 P10	KU8060		**TUP1 80.60**
9,5	1,4	0,7	272	PAP8060 P20	KX8060		**TUP2 80.60**
-	1,4	0,7	347	-	KU8070		**TUP1 80.70**
-	1,4	0,7	395	PAP8080 P10	KU8080		**TUP1 80.80**
9,5	1,4	0,7	363	PAP8080 P20	KX8080		**TUP2 80.80**
-	1,4	0,7	493	PAP80100 P10	KU80100		**TUP1 80.100**
-	1,4	0,7	208	-	KU8540		**TUP1 85.40**
9,5	1,4	0,7	192	-	KX8540		**TUP2 85.40**
-	1,4	0,7	313	PAP8560 P10	KU8560		**TUP1 85.60**
9,5	1,4	0,7	289	-	KX8560		**TUP2 85.60**
-	1,4	0,7	417	-	KU8580		**TUP1 85.80**
9,5	1,4	0,7	385	-	KX8580		**TUP2 85.80**
-	1,4	0,7	525	PAP85100 P10	KU85100		**TUP1 85.100**
-	1,4	0,7	220	-	KU9040		**TUP1 90.40**
9,5	1,4	0,7	203	-	KX9040		**TUP2 90.40**
-	1,4	0,7	277	PAP9050 P10	KU9050		**TUP1 90.50**
-	1,4	0,7	333	PAP9060 P10	KU9060		**TUP1 90.60**
9,5	1,4	0,7	305	PAP9060 P20	KX9060		**TUP2 90.60**
-	1,4	0,7	440	-	KU9080		**TUP1 90.80**
9,5	1,4	0,7	407	-	KX9080		**TUP2 90.80**
9,5	1,4	0,7	458	-	KX9090		**TUP2 90.90**
-	1,4	0,7	551	PAP90100 P10	KU90100		**TUP1 90.100**
-	1,4	0,7	116	-	KU9520		**TUP1 95.20**
-	1,4	0,7	291	-	KU9550		**TUP1 95.50**
-	1,4	0,7	351	-	KU9560		**TUP1 95.60**
-	1,4	0,7	464	-	KU9580		**TUP1 95.80**
-	1,4	0,7	583	PAP95100 P10	KU95100		**TUP1 95.100**
-	1,4	0,7	312	PAP10050 P10	KU10050		**TUP1 100.50**
9,5	1,4	0,7	282	PAP10050 P20	KX10050		**TUP2 100.50**
-	1,4	0,7	388	PAP10060 P10	KU10060		**TUP1 100.60**
-	1,4	0,7	517	-	KU10080		**TUP1 100.80**
9,5	1,4	0,7	451	-	KX10080		**TUP2 100.80**
9,5	1,4	0,7	535	-	KX10095		**TUP2 100.95**
-	1,4	0,7	742	PAP100115 P10	KU100115		**TUP1 100.115**
-	1,4	0,7	370	PAP10560 P10	KU10560		**TUP1 105.60**
9,5	1,4	0,7	355	-	KX10560		**TUP2 105.60**
-	1,4	0,7	494	-	KU10580		**TUP1 105.80**
9,5	1,4	0,7	473	-	KX10580		**TUP2 105.80**
9,5	1,4	0,7	561	-	KX10595		**TUP2 105.95**
9,5	1,4	0,7	650	-	KX105110		**TUP2 105.110**
-	1,4	0,7	712	PAP105115 P10	KU105115		**TUP1 105.115**

* Other products also available

https://nppnovoteh.com

17. PLAIN BEARINGS

17.5. Slide bearings – type TUP



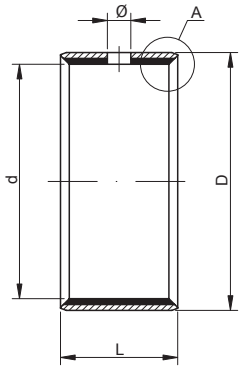

TUP..

110 – 170 mm

Shaft [mm]	Bearing No.	Dimensions [mm]									
		d	D	L	Shaft			housing		wall thickness	
					dw	tolerance		Dw	tolerance	min	max
110	**TUP1 110.60**	110	115	60	110	-0,035	-	115	0,035	2,44	2,49
	TUP2 110.60	110	115	60	110	-0,054	-	115	0,035	2,385	2,45
	TUP1 110.80	110	115	80	110	-0,035	-	115	0,035	2,44	2,49
	TUP2 110.80	110	115	80	110	-0,054	-	115	0,035	2,385	2,45
	TUP2 110.95	110	115	95	110	-0,054	-	115	0,035	2,385	2,45
	TUP2 110.110	110	115	110	110	-0,054	-	115	0,035	2,385	2,45
	TUP1 110.115	110	115	115	110	-0,035	-	115	0,035	2,44	2,49
120	**TUP1 120.60**	120	125	60	120	-0,04	-	125	0,035	2,415	2,465
	TUP2 120.60	120	125	60	120	-0,054	-	125	0,035	2,385	2,45
	TUP1 120.80	120	125	80	120	-0,04	-	125	0,035	2,415	2,465
	TUP2 120.80	120	125	80	120	-0,054	-	125	0,035	2,385	2,45
	TUP1 120.100	120	125	100	120	-0,04	-	125	0,035	2,415	2,465
	TUP2 120.110	120	125	110	120	-0,054	-	125	0,035	2,385	2,45
125	**TUP1 125.60**	125	130	60	125	-0,04	-	130	0,04	2,415	2,465
	TUP2 125.60	125	130	60	125	-0,063	-	130	0,04	2,385	2,45
	TUP1 125.100	125	130	100	125	-0,04	-	130	0,04	2,415	2,465
	TUP2 125.110	125	130	110	125	-0,063	-	130	0,04	2,385	2,45
	TUP1 125.115	125	130	115	125	-0,04	-	130	0,04	2,415	2,465
130	**TUP2 130.50**	130	135	50	130	-0,063	-	135	0,04	2,385	2,45
	TUP1 130.60	130	135	60	130	-0,04	-	135	0,04	2,415	2,465
	TUP2 130.60	130	135	60	130	-0,063	-	135	0,04	2,385	2,45
	TUP1 130.80	130	135	80	130	-0,04	-	135	0,04	2,415	2,465
	TUP2 130.80	130	135	80	130	-0,063	-	135	0,04	2,385	2,45
	TUP1 130.100	130	135	100	130	-0,04	-	135	0,04	2,415	2,465
	TUP2 130.100	130	135	100	130	-0,063	-	135	0,04	2,385	2,45
140	**TUP2 140.50**	140	145	50	140	-0,063	-	145	0,04	2,385	2,45
	TUP1 140.60	140	145	60	140	-0,04	-	145	0,04	2,415	2,465
	TUP2 140.60	140	145	60	140	-0,063	-	145	0,04	2,385	2,45
	TUP1 140.80	140	145	80	140	-0,04	-	145	0,04	2,415	2,465
	TUP2 140.80	140	145	80	140	-0,063	-	145	0,04	2,385	2,45
	TUP1 140.100	140	145	100	140	-0,04	-	145	0,04	2,415	2,465
	TUP2 140.100	140	145	100	140	-0,063	-	145	0,04	2,385	2,45
150	**TUP1 150.50**	150	155	50	150	-0,04	-	155	0,04	2,415	2,465
	TUP2 150.50	150	155	50	150	-0,063	-	155	0,04	2,385	2,45
	TUP1 150.60	150	155	60	150	-0,04	-	155	0,04	2,415	2,465
	TUP2 150.60	150	155	60	150	-0,063	-	155	0,04	2,385	2,45
	TUP1 150.80	150	155	80	150	-0,04	-	155	0,04	2,415	2,465
	TUP2 150.80	150	155	80	150	-0,063	-	155	0,04	2,385	2,45
	TUP1 150.100	150	155	100	150	-0,04	-	155	0,04	2,415	2,465
	TUP2 150.100	150	155	100	150	-0,063	-	155	0,04	2,385	2,45
160	**TUP2 160.50**	160	165	50	160	-0,063	-	165	0,04	2,385	2,45
	TUP1 160.60	160	165	60	160	-0,04	-	165	0,04	2,415	2,465
	TUP2 160.60	160	165	60	160	-0,063	-	165	0,04	2,385	2,45
	TUP1 160.80	160	165	80	160	-0,04	-	165	0,04	2,415	2,465
	TUP2 160.80	160	165	80	160	-0,063	-	165	0,04	2,385	2,45
	TUP1 160.100	160	165	100	160	-0,04	-	165	0,04	2,415	2,465
	TUP2 160.100	160	165	100	160	-0,063	-	165	0,04	2,385	2,45
	TUP1 160.115	160	165	115	160	-0,04	-	165	0,04	2,415	2,465
170	**TUP2 170.50**	170	175	50	170	-0,063	-	175	0,04	2,385	2,45

- warehouse - order - phone

A

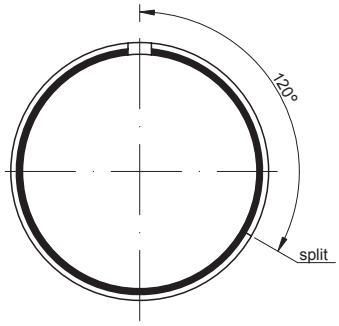

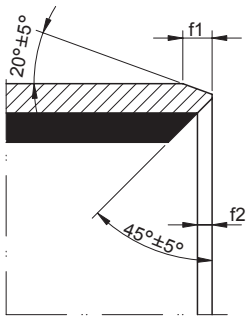

Dimensions [mm]			Weight [g]	Equivalent		Basic makes*	Bearing No.
Φ	f1	f2				-	
-	1,4	0,7	410	PAP11060 P10	KU11060		**TUP1 110.60**
9,5	1,4	0,7	371	-	KX11060		**TUP2 110.60**
-	1,4	0,7	547	-	KU11080		**TUP1 110.80**
9,5	1,4	0,7	495	-	KX11080		**TUP2 110.80**
9,5	1,4	0,7	588	-	KX11095		**TUP2 110.95**
9,5	1,4	0,7	680	-	KX110110		**TUP2 110.110**
-	1,4	0,7	775	PAP110115 P10	KU110115		**TUP1 110.115**
-	1,6	0,8	435	PAP12060 P10	KU12060		**TUP1 120.60**
9,5	1,6	0,8	404	-	KX12060		**TUP2 120.60**
-	1,6	0,8	580	-	KU12080		**TUP1 120.80**
9,5	1,6	0,8	539	-	KX12080		**TUP2 120.80**
-	1,6	0,8	730	PAP120100 P10	KU120100		**TUP1 120.100**
9,5	1,6	0,8	741	-	KX120110		**TUP2 120.110**
-	1,6	0,8	456	-	KU12560		**TUP1 125.60**
9,5	1,6	0,8	421	-	KX12560		**TUP2 125.60**
-	1,6	0,8	760	PAP125100 P10	KU125100		**TUP1 125.100**
9,5	1,6	0,8	771	-	KX125110		**TUP2 125.110**
-	1,6	0,8	874	-	KU125115		**TUP1 125.115**
9,5	1,6	0,8	364	-	KX13050		**TUP2 130.50**
-	1,6	0,8	470	PAP13060 P10	KU13060		**TUP1 130.60**
9,5	1,6	0,8	437	-	KX13060		**TUP2 130.60**
-	1,6	0,8	627	-	KU13080		**TUP1 130.80**
9,5	1,6	0,8	583	-	KX13080		**TUP2 130.80**
-	1,6	0,8	795	PAP130100 P10	KU130100		**TUP1 130.100**
9,5	1,6	0,8	728	-	KX130100		**TUP2 130.100**
9,5	1,6	0,8	392	-	KX14050		**TUP2 140.50**
-	1,6	0,8	515	PAP14060 P10	KU14060		**TUP1 140.60**
9,5	1,6	0,8	470	-	KX14060		**TUP2 140.60**
-	1,6	0,8	687	-	KU14080		**TUP1 140.80**
9,5	1,6	0,8	627	-	KX14080		**TUP2 140.80**
-	1,6	0,8	855	PAP140100 P10	KU140100		**TUP1 140.100**
9,5	1,6	0,8	783	-	KX140100		**TUP2 140.100**
-	1,6	0,8	457	-	KU15050		**TUP1 150.50**
9,5	1,6	0,8	419	-	KX15050		**TUP2 150.50**
-	1,6	0,8	550	PAP15060 P10	KU15060		**TUP1 150.60**
9,5	1,6	0,8	503	-	KX15060		**TUP2 150.60**
-	1,6	0,8	730	PAP15080 P10	KU15080		**TUP1 150.80**
9,5	1,6	0,8	671	-	KX15080		**TUP2 150.80**
-	1,6	0,8	915	PAP150100 P10	KU150100		**TUP1 150.100**
9,5	1,6	0,8	838	-	KX150100		**TUP2 150.100**
11	1,6	0,8	447	-	KX16050		**TUP2 160.50**
-	1,6	0,8	582	-	KU16060		**TUP1 160.60**
11	1,6	0,8	536	-	KX16060		**TUP2 160.60**
-	1,6	0,8	776	PAP16080 P10	KU16080		**TUP1 160.80**
11	1,6	0,8	715	-	KX16080		**TUP2 160.80**
-	1,6	0,8	970	PAP160100 P10	KU160100		**TUP1 160.100**
11	1,6	0,8	893	-	KX160100		**TUP2 160.100**
-	1,6	0,8	1116	-	KU160115		**TUP1 160.115**
11	1,6	0,8	474	-	KX17050		**TUP2 170.50**

* Other products also available

https://nppnovoteh.com

17. PLAIN BEARINGS

17.5. Slide bearings – type TUP



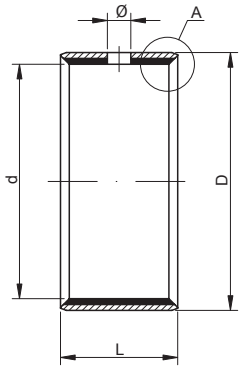

TUP..

170 – 260 mm

Shaft [mm]	Bearing No.	Dimensions [mm]									
		d	D	L	Shaft			housing		wall thickness	
					dw	tolerance		Dw	tolerance	min	max
170 cont.	**TUP2 170.80**	170	175	80	170	-0,063	-	175	0,04	2,385	2,45
	TUP2 170.100	170	175	100	170	-0,063	-	175	0,04	2,385	2,45
180	**TUP2 180.50**	180	185	50	180	-0,072	-	185	0,04	2,385	2,45
	TUP2 180.60	180	185	60	180	-0,072	-	185	0,04	2,385	2,45
	TUP1 180.80	180	185	80	180	-0,046	-	185	0,046	2,415	2,465
	TUP2 180.80	180	185	80	180	-0,072	-	185	0,04	2,385	2,45
	TUP1 180.100	180	185	100	180	-0,046	-	185	0,046	2,415	2,465
	TUP2 180.100	180	185	100	180	-0,072	-	185	0,04	2,385	2,45
190	**TUP2 190.50**	190	195	50	190	-0,072	-	195	0,046	2,385	2,45
	TUP2 190.60	190	195	60	190	-0,072	-	195	0,046	2,385	2,45
	TUP1 190.80	190	195	80	190	-0,046	-	195	0,046	2,415	2,465
	TUP2 190.80	190	195	80	190	-0,072	-	195	0,046	2,385	2,45
	TUP1 190.100	190	195	100	190	-0,046	-	195	0,046	2,415	2,465
	TUP2 190.100	190	195	100	190	-0,072	-	195	0,046	2,385	2,45
	TUP2 190.120	190	195	120	190	-0,072	-	195	0,046	2,385	2,45
200	**TUP2 200.50**	200	205	50	200	-0,072	-	205	0,046	2,385	2,45
	TUP1 200.60	200	205	60	200	-0,046	-	205	0,046	2,415	2,465
	TUP2 200.60	200	205	60	200	-0,072	-	205	0,046	2,385	2,45
	TUP1 200.80	200	205	80	200	-0,046	-	205	0,046	2,415	2,465
	TUP2 200.80	200	205	80	200	-0,072	-	205	0,046	2,385	2,45
	TUP1 200.100	200	205	100	200	-0,046	-	205	0,046	2,415	2,465
	TUP2 200.100	200	205	100	200	-0,072	-	205	0,046	2,385	2,45
	TUP2 200.120	200	205	120	200	-0,072	-	205	0,046	2,385	2,45
220	**TUP2 220.50**	220	225	50	220	-0,072	-	225	0,046	2,385	2,45
	TUP2 220.60	220	225	60	220	-0,072	-	225	0,046	2,385	2,45
	TUP1 220.80	220	225	80	220	-0,046	-	225	0,046	2,415	2,465
	TUP2 220.80	220	225	80	220	-0,072	-	225	0,046	2,385	2,45
	TUP1 220.100	220	225	100	220	-0,046	-	225	0,046	2,415	2,465
	TUP2 220.100	220	225	100	220	-0,072	-	225	0,046	2,385	2,45
	TUP2 220.120	220	225	120	220	-0,072	-	225	0,046	2,385	2,45
240	**TUP2 240.50**	240	245	50	240	-0,072	-	245	0,046	2,385	2,45
	TUP2 240.60	240	245	60	240	-0,072	-	245	0,046	2,385	2,45
	TUP2 240.80	240	245	80	240	-0,072	-	245	0,046	2,385	2,45
	TUP2 240.100	240	245	100	240	-0,072	-	245	0,046	2,385	2,45
	TUP2 240.120	240	245	120	240	-0,072	-	245	0,046	2,385	2,45
250	**TUP2 250.50**	250	255	50	250	-0,081	-	255	0,052	2,385	2,45
	TUP2 250.60	250	255	60	250	-0,081	-	255	0,052	2,385	2,45
	TUP1 250.80	250	255	80	250	-0,052	-	255	0,052	2,415	2,465
	TUP2 250.80	250	255	80	250	-0,081	-	255	0,052	2,385	2,45
	TUP1 250.100	250	255	100	250	-0,052	-	255	0,052	2,415	2,465
	TUP2 250.100	250	255	100	250	-0,081	-	255	0,052	2,385	2,45
	TUP2 250.120	250	255	120	250	-0,081	-	255	0,052	2,385	2,45
260	**TUP2 260.50**	260	265	50	260	-0,081	-	265	0,052	2,385	2,45
	TUP2 260.60	260	265	60	260	-0,081	-	265	0,052	2,385	2,45
	TUP1 260.80	260	265	80	260	-0,052	-	265	0,052	2,415	2,465
	TUP2 260.80	260	265	80	260	-0,081	-	265	0,052	2,385	2,45
	TUP1 260.100	260	265	100	260	-0,052	-	265	0,052	2,415	2,465
	TUP2 260.100	260	265	100	260	-0,081	-	265	0,052	2,385	2,45
	TUP2 260.120	260	265	120	260	-0,081	-	265	0,052	2,385	2,45

- warehouse - order - phone

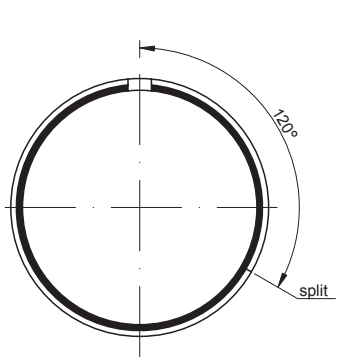

A

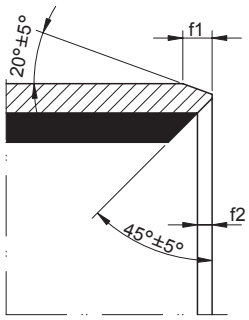

Dimensions [mm]			Weight [g]	Equivalent		Basic makes*	Bearing No.
Φ	f1	f2				-	
11	1,6	0,8	759	-	KX17080	◴	**TUP2 170.80**
11	1,6	0,8	948	-	KX170100	◴	**TUP2 170.100**
11	1,6	0,8	502	-	KX18050	◴	**TUP2 180.50**
11	1,6	0,8	602	-	KX18060	◴	**TUP2 180.60**
-	1,6	0,8	880	-	KU18080	◴	**TUP1 180.80**
11	1,6	0,8	803	-	KX18080	◴	**TUP2 180.80**
-	1,6	0,8	1100	PAP180100 P10	KU180100	◴	**TUP1 180.100**
11	1,6	0,8	1003	-	KX180100	◴	**TUP2 180.100**
11	1,6	0,8	529	-	KX19050	◴	**TUP2 190.50**
11	1,6	0,8	635	-	KX19060	◴	**TUP2 190.60**
-	1,6	0,8	920	-	KU19080	◴	**TUP1 190.80**
11	1,6	0,8	847	-	KX19080	◴	**TUP2 190.80**
-	1,6	0,8	1150	-	KU190100	◴	**TUP1 190.100**
11	1,6	0,8	1058	-	KX190100	◴	**TUP2 190.100**
11	1,6	0,8	1270	-	KX190120	◴	**TUP2 190.120**
11	1,6	0,8	557	-	KX20050	◴	**TUP2 200.50**
-	1,6	0,8	732	-	KU20060	◴	**TUP1 200.60**
11	1,6	0,8	668	-	KX20060	◴	**TUP2 200.60**
-	1,6	0,8	976	-	KU20080	◴	**TUP1 200.80**
11	1,6	0,8	891	-	KX20080	◴	**TUP2 200.80**
-	1,6	0,8	1220	PAP200100 P10	KU200100	◴	**TUP1 200.100**
11	1,6	0,8	1113	-	KX200100	◴	**TUP2 200.100**
11	1,6	0,8	1336	-	KX200120	◴	**TUP2 200.120**
12	1,6	0,8	612	-	KX22050	◴	**TUP2 220.50**
12	1,6	0,8	734	-	KX22060	◴	**TUP2 220.60**
-	1,6	0,8	1056	-	KU22080	◴	**TUP1 220.80**
12	1,6	0,8	979	-	KX22080	◴	**TUP2 220.80**
-	1,6	0,8	1320	PAP220100 P10	KU220100	◴	**TUP1 220.100**
12	1,6	0,8	1223	-	KX220100	◴	**TUP2 220.100**
12	1,6	0,8	1468	-	KX220120	◴	**TUP2 220.120**
12	1,6	0,8	667	-	KX24050	◴	**TUP2 240.50**
12	1,6	0,8	800	-	KX24060	◴	**TUP2 240.60**
12	1,6	0,8	1067	-	KX24080	◴	**TUP2 240.80**
12	1,6	0,8	1333	-	KX240100	◴	**TUP2 240.100**
12	1,6	0,8	1600	-	KX240120	◴	**TUP2 240.120**
12	1,6	0,8	694	-	KX25050	◴	**TUP2 250.50**
12	1,6	0,8	833	-	KX25060	◴	**TUP2 250.60**
-	1,6	0,8	1196	-	KU25080	◴	**TUP1 250.80**
12	1,6	0,8	1111	-	KX25080	◴	**TUP2 250.80**
-	1,6	0,8	1495	PAP250100 P10	KU250100	◴	**TUP1 250.100**
12	1,6	0,8	1388	-	KX250100	◴	**TUP2 250.100**
12	1,6	0,8	1666	-	KX250120	◴	**TUP2 250.120**
12	1,6	0,8	722	-	KX26050	◴	**TUP2 260.50**
12	1,6	0,8	866	-	KX26060	◴	**TUP2 260.60**
-	1,6	0,8	1236	-	KU26080	◴	**TUP1 260.80**
12	1,6	0,8	1155	-	KX26080	◴	**TUP2 260.80**
-	1,6	0,8	1545	-	KU260100	◴	**TUP1 260.100**
12	1,6	0,8	1443	-	KX260100	◴	**TUP2 260.100**
12	1,6	0,8	1732	-	KX260120	◴	**TUP2 260.120**

* Other products also available

https://nppnovoteh.com

17. PLAIN BEARINGS

17.5. Slide bearings – type TUP



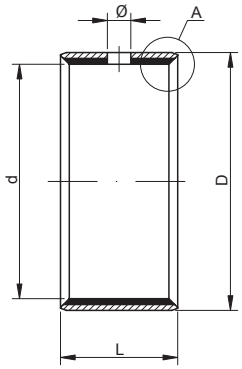

TUP..

280 – 300 mm

Shaft [mm]	Bearing No.	Dimensions [mm]									
		d	D	L	Shaft			housing		wall thickness	
					dw	tolerance		Dw	tolerance	min	max
280	**TUP2 280.50**	280	285	50	280	-0,081	-	285	0,052	2,385	2,45
	TUP2 280.60	280	285	60	280	-0,081	-	285	0,052	2,385	2,45
	TUP1 280.80	280	285	80	280	-0,052	-	285	0,052	2,415	2,465
	TUP2 280.80	280	285	80	280	-0,081	-	285	0,052	2,385	2,45
	TUP1 280.100	280	285	100	280	-0,052	-	285	0,052	2,415	2,465
	TUP2 280.100	280	285	100	280	-0,081	-	285	0,052	2,385	2,45
	TUP2 280.120	280	285	120	280	-0,081	-	285	0,052	2,385	2,45
300	**TUP2 300.50**	300	305	50	300	-0,081	-	305	0,052	2,385	2,45
	TUP2 300.60	300	305	60	300	-0,081	-	305	0,052	2,385	2,45
	TUP1 300.80	300	305	80	300	-0,052	-	305	0,052	2,415	2,465
	TUP2 300.80	300	305	80	300	-0,081	-	305	0,052	2,385	2,45
	TUP1 300.100	300	305	100	300	-0,052	-	305	0,052	2,415	2,465
	TUP2 300.100	300	305	100	300	-0,081	-	305	0,052	2,385	2,45
	TUP2 300.120	300	305	120	300	-0,081	-	305	0,052	2,385	2,45

- warehouse - order - phone

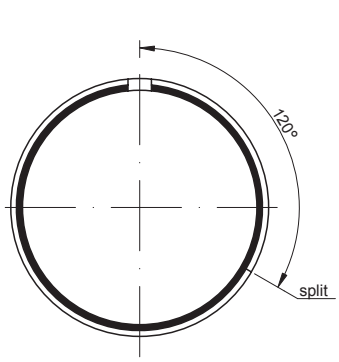

A

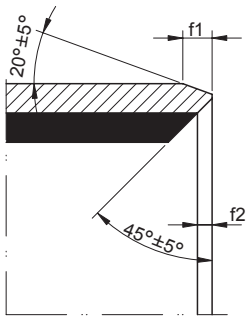

Dimensions [mm]			Weight [g]	Equivalent		Basic makes*	Bearing No.
Φ	f1	f2				-	
12	1,6	0,8	777	-	KX28050	◴	**TUP2 280.50**
12	1,6	0,8	932	-	KX28060	◴	**TUP2 280.60**
-	1,6	0,8	1320	-	KU28080	◴	**TUP1 280.80**
12	1,6	0,8	1242	-	KX28080	◴	**TUP2 280.80**
-	1,6	0,8	1650	-	KU280100	◴	**TUP1 280.100**
12	1,6	0,8	1553	-	KX280100	◴	**TUP2 280.100**
12	1,6	0,8	1864	-	KX280120	◴	**TUP2 280.120**
12	1,6	0,8	832	-	KX30050	◴	**TUP2 300.50**
12	1,6	0,8	998	-	KX30060	◴	**TUP2 300.60**
-	1,6	0,8	1408	-	KU30080	◴	**TUP1 300.80**
12	1,6	0,8	1330	-	KX30080	◴	**TUP2 300.80**
-	1,6	0,8	1760	PAP300100 P10	KU300100	◴	**TUP1 300.100**
12	1,6	0,8	1663	-	KX300100	◴	**TUP2 300.100**
12	1,6	0,8	1996	-	KX300120	◴	**TUP2 300.120**

*Other dots available



https://nppnovoteh.com

17. PLAIN BEARINGS

17.6. Slide bearings – type TUF



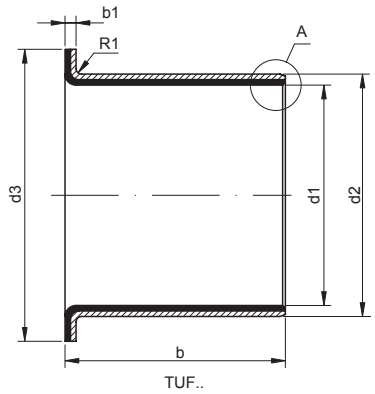

6 – 40 mm

Shaft [mm]	Bearing No.	Dimensions [mm]						
		d1	d2	d3 ±0,5	b ±0,25	b1	f1	f2
6	**TUF1 06.040**	6	8	12	4	1	0,5	0,4
	TUF1 06.070	6	8	12	7	1	0,5	0,4
8	**TUF1 08.055**	8	10	15	5,5	1	0,5	0,4
	TUF1 08.075	8	10	15	7,5	1	0,5	0,4
10	**TUF1 10.070**	10	12	18	7	1	0,5	0,4
	TUF1 10.090	10	12	18	9	1	0,5	0,4
	TUF1 10.120	10	12	18	12	1	0,5	0,4
12	**TUF1 12.070**	12	14	20	7	1	0,5	0,4
	TUF1 12.090	12	14	20	9	1	0,5	0,4
	TUF1 12.120	12	14	20	12	1	0,5	0,4
14	**TUF1 14.120**	14	16	22	12	1	0,5	0,4
	TUF1 14.170	14	16	22	17	1	0,5	0,4
15	**TUF1 15.090**	15	17	23	9	1	0,5	0,4
	TUF1 15.120	15	17	23	12	1	0,5	0,4
	TUF1 15.170	15	17	23	17	1	0,5	0,4
16	**TUF1 16.120**	16	18	24	12	1	0,5	0,4
	TUF1 16.170	16	18	25	17	1	0,5	0,4
18	**TUF1 18.120**	18	20	26	12	1	0,8	0,4
	TUF1 18.170	18	20	26	17	1	0,8	0,4
	TUF1 18.200	18	20	26	20	1	0,8	0,4
20	**TUF1 20.115**	20	23	30	11,5	1,5	0,8	0,4
	TUF1 20.165	20	23	30	16,5	1,5	0,8	0,4
	TUF1 20.215	20	23	30	21,5	1,5	0,8	0,4
22	**TUF1 22.150**	22	25	32	15	1,5	0,8	0,4
	TUF1 22.200	22	25	32	20	1,5	0,8	0,4
25	**TUF1 25.115**	25	28	35	11,5	1,5	1	0,5
	TUF1 25.165	25	28	35	16,5	1,5	1	0,5
	TUF1 25.215	25	28	35	21,5	1,5	1	0,5
30	**TUF1 30.160**	30	34	42	16	2	1	0,5
	TUF1 30.260	30	34	42	26	2	1	0,5
35	**TUF1 35.160**	35	39	47	16	2	1	0,5
	TUF1 35.260	35	39	47	26	2	1	0,5
40	**TUF1 40.260**	40	44	53	26	2	1	0,5
	TUF1 40.400	40	44	53	40	2	1	0,5

- warehouse - order - phone

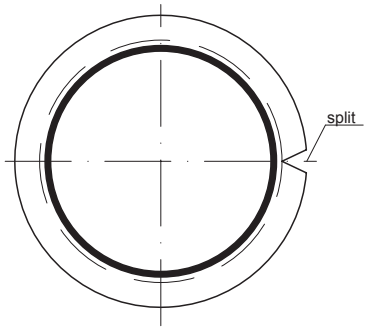

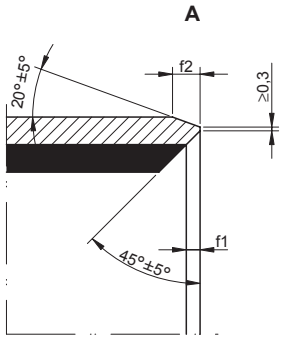

Weight [g]	Ident	Bushes*	Bearing No.
		-	
0,9	PAF 06040 P10	◴	**TUF1 06.040**
1,6	PAF 06070 P10	◴	**TUF1 06.070**
1,7	PAF 08055 P10	◴	**TUF1 08.055**
2,1	PAF 08075 P10	◴	**TUF1 08.075**
2,5	PAF 10070 P10	◴	**TUF1 10.070**
2,9	PAF 10090 P10	◴	**TUF1 10.090**
3,8	PAF 10120 P10	◴	**TUF1 10.120**
3	PAF 12070 P10	◴	**TUF1 12.070**
3,7	PAF 12090 P10	◴	**TUF1 12.090**
4,7	PAF 12120 P10	◴	**TUF1 12.120**
5,4	PAF 14120 P10	◴	**TUF1 14.120**
7,1	PAF 14170 P10	◴	**TUF1 14.170**
4,4	PAF 15090 P10	◴	**TUF1 15.090**
5,7	PAF 15120 P10	◴	**TUF1 15.120**
7,7	PAF 15170 P10	◴	**TUF1 15.170**
6	PAF 16120 P10	◴	**TUF1 16.120**
8,3	PAF 16170 P10	◴	**TUF1 16.170**
6,7	PAF 18120 P10	◴	**TUF1 18.120**
8,9	PAF 18170 P10	◴	**TUF1 18.170**
11,1	PAF 18220 P10	◴	**TUF1 18.200**
11,6	PAF 20115 P10	◴	**TUF1 20.115**
15,1	PAF 20165 P10	◴	**TUF1 20.165**
19,1	PAF 20215 P10	◴	**TUF1 20.215**
13,5	-	◴	**TUF1 22.150**
18	-	◴	**TUF1 22.200**
14,2	PAF 25115 P10	◴	**TUF1 25.115**
19	PAF 25165 P10	◴	**TUF1 25.165**
23,9	PAF 25215 P10	◴	**TUF1 25.215**
30,9	PAF 30160 P10	◴	**TUF1 30.160**
46,1	PAF 30260 P10	◴	**TUF1 30.260**
35,4	PAF 35160 P10	◴	**TUF1 35.160**
52,7	PAF 35260 P10	◴	**TUF1 35.260**
60	PAF 40260 P10	◴	**TUF1 40.260**
92,3	-	◴	**TUF1 40.400**

* Other products also available



https://nppnovoteh.com

17. PLAIN BEARINGS

17.7. Slide bearings – type TUW



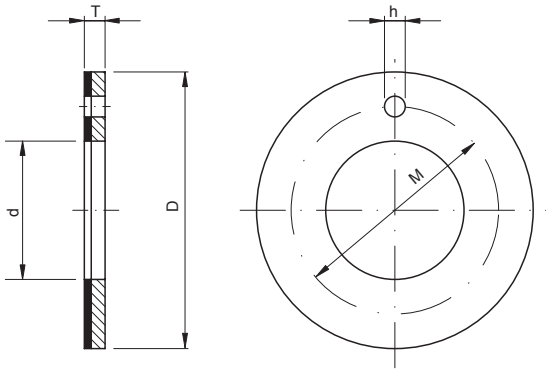

8 – 60 mm

Shaft [mm]	Bearing No.	Dimensions [mm]				
		Shaft	d + 0,25	D - 0,25	T - 0,05	M ± 0,12
8	**TUW1 10**	8	10	20	1,5	15
	TUW2 10	8	10	20	1,5	15
10	**TUW1 12**	10	12	24	1,5	18
	TUW2 12	10	12	24	1,5	18
12	**TUW1 14**	12	14	26	1,5	20
	TUW2 14	12	14	26	1,5	20
14	**TUW1 16**	14	16	30	1,5	23
	TUW2 16	14	16	30	1,5	23
16	**TUW1 18**	16	18	32	1,5	25
	TUW2 18	16	18	32	1,5	25
18	**TUW1 20**	18	20	36	1,5	28
	TUW2 20	18	20	36	1,5	28
20	**TUW1 22**	20	22	38	1,5	30
	TUW2 22	20	22	38	1,5	30
22	**TUW1 24**	22	24	42	1,5	33
	TUW2 24	22	24	42	1,5	33
24	**TUW1 26**	24	26	44	1,5	35
	TUW2 26	24	26	44	1,5	35
25	**TUW1 28**	25	28	48	1,5	38
	TUW2 28	25	28	48	1,5	38
30	**TUW1 32**	30	32	54	1,5	43
	TUW2 32	30	32	54	1,5	43
35	**TUW1 38**	35	38	62	1,5	50
	TUW2 38	35	38	62	1,5	50
40	**TUW1 42**	40	42	66	1,5	54
	TUW2 42	40	42	66	1,5	54
45	**TUW1 48**	45	48	74	2	61
	TUW2 48	45	48	74	2	61
50	**TUW1 52**	50	52	78	2	65
	TUW2 52	50	52	78	2	65
60	**TUW1 62**	60	62	90	2	76
	TUW2 62	60	62	90	2	76

- warehouse - order - phone

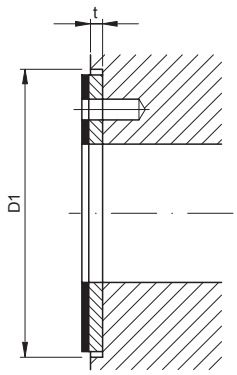

Abutment dimension [mm]			Weight [g]	Equivalent	Basic makes*	Bearing No.
h from + 0,4 to + 0,1	t ±0,2	D1 ±0,12			-	
1,5	1	20	2,6	PAW 10 P10	◴	**TUW1 10**
1,5	1	20	2,5	PAW 10 P20	◴	**TUW2 10**
1,5	1	24	3,8	PAW 12 P10	◴	**TUW1 12**
1,5	1	24	3,5	PAW 12 P20	◴	**TUW2 12**
2	1	26	4,3	PAW 14 P10	◴	**TUW1 14**
2	1	26	3,7	PAW 14 P20	◴	**TUW2 14**
2	1	30	5,5	PAW 16 P10	◴	**TUW1 16**
2	1	30	4,5	PAW 16 P20	◴	**TUW2 16**
2	1	32	6	PAW 18 P10	◴	**TUW1 18**
2	1	32	5,6	PAW 18 P20	◴	**TUW2 18**
3	1	36	8	PAW 20 P10	◴	**TUW1 20**
3	1	36	7,4	PAW 20 P20	◴	**TUW2 20**
3	1	38	8,5	PAW 22 P10	◴	**TUW1 22**
3	1	38	7,9	PAW 22 P20	◴	**TUW2 22**
3	1	42	9,8	PAW 24 P10	◴	**TUW1 24**
3	1	42	9,1	PAW 24 P20	◴	**TUW2 24**
3	1	44	11,1	PAW 26 P10	◴	**TUW1 26**
3	1	44	10,3	PAW 26 P20	◴	**TUW2 26**
4	1	48	13,3	PAW 28 P10	◴	**TUW1 28**
4	1	48	12,4	PAW 28 P20	◴	**TUW2 28**
4	1	54	16,3	PAW 32 P10	◴	**TUW1 32**
4	1	54	15,2	PAW 32 P20	◴	**TUW2 32**
4	1	62	21	PAW 38 P10	◴	**TUW1 38**
4	1	62	19,5	PAW 38 P20	◴	**TUW2 38**
4	1	66	23,5	PAW 42 P10	◴	**TUW1 42**
4	1	66	20,8	PAW 42 P20	◴	**TUW2 42**
4	1,5	74	36,8	PAW 48 P10	◴	**TUW1 48**
4	1,5	74	34,9	PAW 48 P20	◴	**TUW2 48**
4	1,5	78	38,8	PAW 52 P10	◴	**TUW1 52**
4	1,5	78	36,1	PAW 52 P20	◴	**TUW2 52**
4	1,5	90	48,8	PAW 62 P10	◴	**TUW1 62**
4	1,5	90	47,5	PAW 62 P20	◴	**TUW2 62**

* Other products also available

https://nppnovoteh.com

17. PLAIN BEARINGS

17.8. Slide bearings – type TUZ

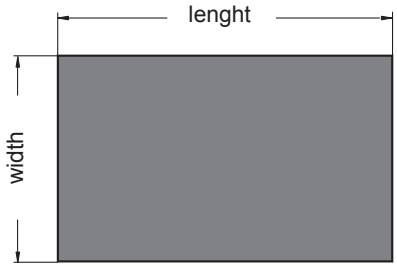

Bearing No.	Dimensions [mm]			Weight [kg]	Basic makes*
	length ±1	width ±1	thickness -0,04		-
TUZ1 125.10	500	125	1	0,42	◴
TUZ2 125.10	500	125	1	0,398	◴
TUZ1 125.15	500	125	1,5	0,673	◴
TUZ2 125.15	500	125	1,5	0,621	◴
TUZ1 150.20	500	150	2	1,081	◴
TUZ2 150.20	500	150	2	1	◴
TUZ1 150.25	500	150	2,5	1,383	◴
TUZ2 150.25	500	150	2,5	1,261	◴

- warehouse ◴ - order - phone * Other products also available

https://nppnovoteh.com



https://nppnovoteh.com

18. BEARING SLEEVES

ADAPTER AND WITHDRAWAL SLEEVES

TULEJE ŁOZYSKOW





SLEEVES

ŁOZYSKOWE

TULEJE ŁOZYS

TABLES:

18. BEARING SLEEVE
18.1. Withdrawal sleeves
18.2. Adapter sleeves
18.3. Lock nuts – type KM
18.4 Lock nuts – type HM
18.5 Lock nuts – type KMT
18.6 Lock nuts – type KMTA
18.7 Lock washers – type MB
18.8 Lock washers – type MS

INTRODUCTION:

18. Bearing sleeves, lock nuts and lock washers

18.1. Adapter sleeves and withdrawal sleeves

18.1.1. Dimension series

Series	Type of sleeve	Taper	Lock nut	Lock washer	Appropriate bearing series – with tapered bore (K)
H2..	adapter sleeve	1:12	KM..,HM..	MB..	12..*, 202..
H3..	adapter sleeve	1:12	KM..,HM..	MB..	22.., 222..*, 13.., 203.., 213..
H23..	adapter sleeve	1:12	KM..,HM..	MB..	232..*, 23.., 223..
H39..	adapter sleeve	1:12	HM.., HM39..	MS39..	239..
H30..	adapter sleeve	1:12	HM.., HM30..	MS30..	12..*, 230..
H31..	adapter sleeve	1:12	HM.., HM31..	MS31..	222..*, 231..
H32..	adapter sleeve	1:12	HM31..	MS32..	232..*
AH2..	withdrawal sleeve	1:12	KM.., HMV..**	-	12..*, 202..
AH22..	withdrawal sleeve	1:12	KM.., HMV..**	-	22..*, 222..*,
AH3..	withdrawal sleeve	1:12	KM.., HMV..**	-	22..*, 222..*, 13.., 203.., 213..*
AH23..	withdrawal sleeve	1:12	KM.., HMV..**	-	232..*, 23..*, 223..
AH39..	withdrawal sleeve	1:12	KM.., HMV..**	-	239..
AH30..	withdrawal sleeve	1:12	KM.., HMV..**	-	12..*, 230..
AH31..	withdrawal sleeve	1:12	KM.., HMV..**	-	222..*, 231..
AH32..	withdrawal sleeve	1:12	KM.., HMV..**	-	232..*
AH240..	withdrawal sleeve	1:30	KM.., HMV..**	-	240..
AH241..	withdrawal sleeve	1:30	KM.., HMV..**	-	241..

*) Bearing series marked like this are mounted on various sleeves, depending on size.
**) Demounting nuts (regular and hydraulic) are not delivered in set with the sleeve.
***) H-symbol behind the sleeve number means the make that is suitable for hydraulic assembly.

Notes
regarding adapter sleeves

- between 12-series.. and 1222 K-series, the sleeve of H2-series, above the sleeve of H30-series is used
- between 222-series.. and 22222 K-series, the sleeve of H3-series, above the sleeve of H31-series is used.



Fig.61 Withdrawal sleeve

- between 232-series.. and 23256 K-series, the sleeve of H23-series, above the sleeve of H32-series is used

regarding withdrawal sleeves

- between 12-series and 1222 K-series, the sleeve of AH2-series, above the sleeve of H30-series is used
- 22-series, the sleeve of AH22-series interchangeably with AH3-series sleeve is used
- 222-series, the sleeve of AH22-series interchangeably with AH3-series sleeve is used up to 22222 K-series, and above the sleeve of AH31-series is used
- from 232-series to 23240K-series the AH232-series sleeve is used, then up to 23256 K-series the AH23-series sleeve is used, and then again the AH32-series sleeve is used

18.1.2. Structure and features

Bearing sleeves are the elements that are commonly used with rolling bearings. Generally every bearing can be mounted on the shaft by means of a sleeve, but in practice it applies mostly to self-aligning ball bearings or spherical roller bearings, more rarely to deep-groove ball bearings.

https://nppnovoteh.com

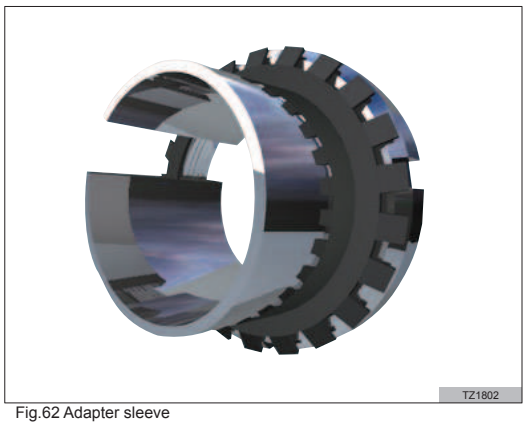

Fig.62 Adapter sleeve

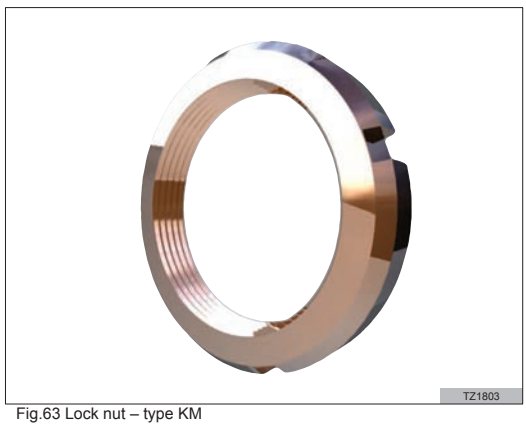

Fig.63 Lock nut – type KM

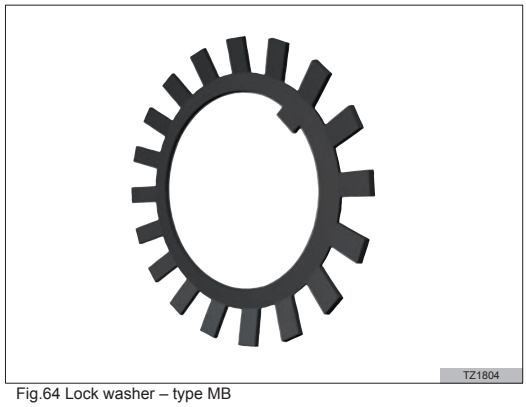

Fig.64 Lock washer – type MB

For many reasons it is recommended to use bearing sleeves. You can find below some of them:

- facilitated housing
- decisively quicker and more comfortable mounting procedure (specialist equipment is not necessary)
- decisively quicker and more comfortable dismounting procedure (specialist equipment is not necessary)
- lower requirements regarding the shaft processing (the shaft need not to be grinded – lower cost)
- safety – the sleeve protects the shaft against damage
- lower operations costs – (mounting and dismounting cost, possible damage of shaft)

The mounting procedure by means of a sleeve is possible owing to tapered bores made in bearings (K behind the symbol), whereas standard taper of the cone is 1:12. Only 240- and 241-series sleeves for spherical roller bearings of the same series are made with the taper of 1:30. There are two types of sleeves: **adapter (H) sleeves** and **withdrawal (AH) sleeves**. Adapter sleeves are more popular because they enable housing of bearings both on flat and on outstanding shafts. Their mounting and dismounting is easier than in case of withdrawal sleeves and, moreover, they do not require additional fixing on the shaft. Adapter sleeves consist of three elements: the actual sleeve, toothed washer **MB..** (for large sleeves lock washer of **MS-type**) and lock nut of **KM** or **HM-type**. Withdrawal sleeves require no additional equipment and mounting nuts are not delivered together with sleeves but only to separate order.

18.2. Lock nuts and lock washers

18.2.1. Dimension series

18.2.2. Basic features

Bearing nuts (lock nuts) are for fixing the bearing on the shaft or on the adapter sleeve (a nut and a washer are delivered together with a sleeve), as well as for mounting and dismounting bearings on withdrawal sleeves or on tapered shaft mandrels. Lock nuts have four or eight cuts, arranged symmetrically on their circumference where the catch of the appropriate hook spanner is put. On the whole, smaller lock nuts (till the 40KM/KML size) have a metric thread and bigger (from the 41-size on) a trapezoid thread. Washer types depend directly on these sizes. Within the above mentioned ranges one uses toothed lock washers of MB-type and MBL-type for small lock nuts and shaped washers of MS-type for bigger lock nuts. Shaped washers fit into groove on the shaft and fix lock nuts in position. Washers are fastened to lock nuts with hexagonal bolts.

18.3. Independent lock nuts of KMT- and KMTA-type

18.3.1. Dimension series

- **KMT..**
- **KMTA..**

18.3.2. Structure and features

Lock nuts of KMT- and KMTA-type allow to easily and precisely fix bearings or other interacting elements axially on

Lock nut type	Thread	Washer	Type	Notes
KM..	metric	MB..	toothed	standard version differs slightly from the L-version in size
KML..	metric	MBL..	toothed	
HM..	metric*	MB..	toothed	*) rare series rather HM.., T..,HM…T version
HML..	metric*	MBL..	toothed	
HM..T	trapezoid*	MB..	toothed	*) washers are not adapted for all types of lock nuts
HML..T	trapezoid*	MBL..	toothed	
HM30..	trapezoid	MS30..	shaped	other type of washers – shaped washer with thread and hexagonal bolt
HM31..	trapezoid	MS31..	shaped	

https://nppnovoteh.com

the shaft. They are used, above all, to fix precise bearings, matching their size. Key construction feature of KMT and KMTA lock nuts are three brass blocking pins evenly distributed on their circumference. They are hold down to the shaft thread through grub screws preventing the lock nut from turning, thus making mounting as well as the whole construction easier, because no additional toothed or shaped washers are needed. Blocking bolts and grub screws are arranged obliquely to the shaft at the same angle as flanks of thread. Surfaces of blocking pins' ends are processed in the same step of the technological process as nut thread so they take on the thread's shape. Safetying of a nut consists only in friction between safety pins and the shaft's thread, as well as in the static friction between flanks of the thread. Owing to this the blocking pins are not exposed to axial load acting on the nut, and after safetying of the nut flanks of the thread are not axially relieved and the nut is not subject to deformation. Equally significant feature of KMT and KMTA lock nuts is their adjustability. Three blocking pins, evenly distributed on the circumference allow to fix the nut exactly at right angle during safetying procedure or to compensate inaccuracies and deviations of other construction elements fixed on the shaft. KMT-type lock nuts are made with grooves, whereas small-sized nuts have two chamfers on the opposite sides to apply a spanner. These nuts are meant for applications where simple housing of bearings, reliable protection and high precision are required. Despite the fact that KMTA-nuts differ from KMT-nuts in outside shape and also partially in the thread (different pitch of thread), they have similar features. They have smooth projection surfaces and are designed for compact housings in the first place. Because projection surface is cylindrical, the nut can be also used as part of the slotted seal. Holes on the circumference and on the face makes nut housing easier. KMT and KMTA nuts are made of heavy-duty electro-granodized steel. Safety pins are made of cold drawing brass.

https://nppnovoteh.com

18. BEARING SLEEVE

18.1. Withdrawal sleeves



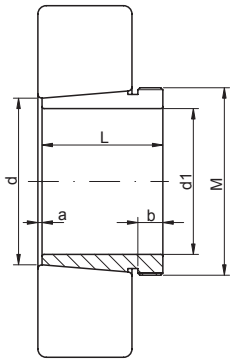

AH..

35 – 85 mm

Shaft [mm]	Sleeve No.	Dimensions [mm]					
		d	d1	L	b	a	M-thread
35	**AH208**	40	35	25	6	2	M45X1,5
	AH308	40	35	29	6	3	M45X1,5
	AH2308	40	35	40	7	3	M45X1,5
	AH3308	40	35	44	7	3	M45X1,5
40	**AH209**	45	40	26	6	3	M50X1,5
	AH309	45	40	31	6	3	M50X1,5
	AH2309	45	40	44	7	3	M50X1,5
	AH3309	45	40	47	7	3	M50X1,5
45	**AH210**	50	45	28	7	3	M55X2
	AHX310	50	45	35	7	3	M55X2
	AHX2310	50	45	50	9	3	M55X2
	AH3310	50	45	54	9	3	M55X2
50	**AH211**	55	50	29	7	3	M60X2
	AHX311	55	50	37	7	3	M60X2
	AHX2311	55	50	54	10	3	M60X2
	AH3311	55	50	60	10	3	M60X2
55	**AH212**	60	55	32	8	3	M65X2
	AHX312	60	55	40	8	3	M65X2
	AHX2312	60	55	58	11	3	M65X2
	AH3312	60	55	65	11	3	M70X2
60	**AH213**	65	60	32,5	8	3,5	M75X2
	AH313	65	60	42	8	3	M75X2
	AH2313	65	60	61	12	3	M75X2
	AH3313	65	60	71	12	3	M75X2
65	**AH214**	70	65	33,5	8	3,5	M80X2
	AH314	70	65	43	8	4	M80X2
	AHX2314	70	65	64	12	4	M80X2
	AH3314	70	65	76	12	4	M80X2
70	**AH215**	75	70	34,5	8	3,5	M85X2
	AH315	75	70	45	8	4	M85X2
	AHX2315	75	70	68	12	4	M85X2
	AH3315	75	70	81	12	4	M85X2
75	**AH216**	80	75	35,5	8	3,5	M90X2
	AH316	80	75	48	8	4	M90X2
	AHX2316	80	75	71	12	4	M90X2
	AH3316	80	75	81	12	4	M90X2
80	**AH217**	85	80	38,5	9	3,5	M95X2
	AHX317	85	80	52	9	4	M95X2
	AH3217	85	80	60	10	4	M95X2
	AHX2317	85	80	74	13	4	M95X2
	AH3317	85	80	86	13	4	M95X2
85	**AH218**	90	85	40	9	4	M100X2
	AHX318	90	85	53	9	4	M100X2
	AHX3218	90	85	63	10	4	M100X2
	AHX2318	90	85	79	14	4	M100X2
	AH3318	90	85	87	14	4	M100X2

- warehouse - order - phone

Weight [kg]	Basic makes*		Sleeve No.
	-	H	
0,081			**AH208**
0,09			**AH308**
0,128			**AH2308**
0,147			**AH3308**
0,095			**AH209**
0,109			**AH309**
0,164			**AH2309**
0,18			**AH3309**
0,114			**AH210**
0,137			**AHX310**
0,209			**AHX2310**
0,24			**AH3310**
0,132			**AH211**
0,161			**AHX311**
0,253			**AHX2311**
0,301			**AH3311**
0,161			**AH212**
0,189			**AHX312**
0,297			**AHX2312**
0,408			**AH3312**
0,213			**AH213**
0,253			**AH313**
0,395			**AH2313**
0,492			**AH3313**
0,24			**AH214**
0,28			**AH314**
0,466			**AHX2314**
0,572			**AH3314**
0,259			**AH215**
0,313			**AH315**
0,534			**AHX2315**
0,668			**AH3315**
0,284			**AH216**
0,365			**AH316**
0,597			**AHX2316**
0,712			**AH3316**
0,314			**AH217**
0,429			**AHX317**
0,517			**AH3217**
0,67			**AHX2317**
0,81			**AH3317**
0,351			**AH218**
0,461			**AHX318**
0,576			**AHX3218**
0,779			**AHX2318**
0,88			**AH3318**

* Other products also available



https://nppnovoteh.com

18. BEARING SLEEVE

18.1. Withdrawal sleeves



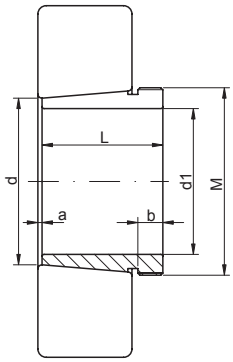

AH..

90 – 145 mm

Shaft [mm]	Sleeve No.	Dimensions [mm]					
		d	d1	L	b	a	M-thread
90	**AH219**	95	90	43	10	4	M105X2
	AHX319	95	90	57	10	4	M105X2
	AHX3219	95	90	67	11	4	M105X2
	AHX2319	95	90	85	16	4	M105X2
	AH3319	95	90	94	16	4	M105X2
95	**AH220**	100	95	45	10	4	M110X2
	AHX320	100	95	59	10	4	M110X2
	AH24020	100	95	62	12	9	M105X2
	AHX3120	100	95	64	11	4	M110X2
	AHX3220	100	95	73	11	4	M110X2
	AH24120	100	95	78	13	9	M105X2
	AHX2320	100	95	90	16	4	M110X2
	AH3320	100	95	99	16	4	M110X2
105	**AH222**	110	105	50	11	4	M120X3
	AHX322	110	105	63	12	4	M120X2
	AHX3122	110	105	68	11	4	M120X2
	AH24022	110	105	73	13	9	M115X2
	AH24122	110	105	82	13	9	M115X2
	AHX3222	110	105	82	11	4	M125X2
	AHX2322	110	105	98	16	4	M125X2
	AH3322	110	105	108	16	4	M125X2
115	**AH224**	120	115	53	12	4	M130X2
	AHX3024	120	115	60	13	4	M130X2
	AHX324	120	115	69	13	4	M130X2
	AH24024	120	115	73	13	9	M125X2
	AHX3124	120	115	75	12	4	M130X2
	AHX3224	120	115	90	13	4	M135X2
	AH24124	120	115	93	13	9	M130X2
	AHX2324	120	115	105	17	4	M135X2
	AH3324	120	115	123	17	4	M135X2
125	**AH226**	130	125	53	12	4	M140X2
	AHX3026	130	125	67	14	4	M140X2
	AHX326	130	125	74	14	4	M140X2
	AHX3126	130	125	78	12	4	M140X2
	AH24026	130	125	83	14	10	M135X2
	AH24126	130	125	94	14	10	M140X2
	AHX3226	130	125	98	15	4	M145X2
	AHX2326	130	125	115	19	4	M145X2
	AH3326	130	125	131	19	4	M145X2
135	**AH228**	140	135	56	13	5	M150X2
	AHX3028	140	135	68	14	5	M150X2
	AHX328	140	135	77	14	5	M150X2
	AH24028	140	135	83	14	5	M150X2
	AHX3128	140	135	83	14	5	M150X2
	AH24128	140	135	99	14	10	M150X2
	AHX3228	140	135	104	15	5	M155X3
	AHX2328	140	135	125	20	5	M155X3
	AH3328	140	135	138	20	5	M155X3
145	**AH230**	150	145	60	14	5	M160X3
	AHX3030	150	145	72	15	5	M160X2

- warehouse - order - phone

Weight [kg]	Basic makes*		Sleeve No.
	-	H	
0,403			**AH219**
0,532			**AHX319**
0,655			**AHX3219**
0,886			**AHX2319**
1,03			**AH3319**
0,481			**AH220**
0,582			**AHX320**
0,5			**AH24020**
0,65			**AHX3120**
0,767			**AHX3220**
0,641			**AH24120**
0,998			**AHX2320**
1,16			**AH3320**
0,547			**AH222**
0,663			**AHX322**
0,76			**AHX3122**
0,64			**AH24022**
0,73			**AH24122**
1,04			**AHX3222**
1,35			**AHX2322**
1,54			**AH3322**
0,679			**AH224**
0,75			**AHX3024**
0,866			**AHX324**
0,65			**AH24024**
0,95			**AHX3124**
1,3			**AHX3224**
1			**AH24124**
1,6			**AHX2324**
1,98			**AH3324**
0,725			**AH226**
0,93			**AHX3026**
1,02			**AHX326**
1,08			**AHX3126**
0,84			**AH24026**
1,12			**AH24126**
1,58			**AHX3226**
1,97			**AHX2326**
2,34			**AH3326**
0,818			**AH228**
1,01			**AHX3028**
1,16			**AHX328**
1,28			**AH24028**
1,28			**AHX3128**
1,28			**AH24128**
1,84			**AHX3228**
2,33			**AHX2328**
2,7			**AH3328**
0,963			**AH230**
1,15			**AHX3030**

* Other products also available



https://nppnovoteh.com

18. BEARING SLEEVE

18.1. Withdrawal sleeves



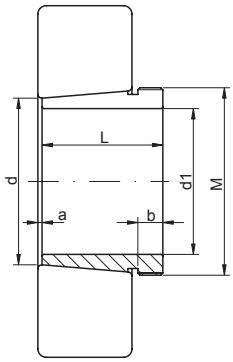

AH..

145 – 190 mm

Shaft [mm]	Sleeve No.	Dimensions [mm]					
		d	d1	L	b	a	M-thread
145 cont.	**AHX330**	150	145	83	15	5	M165X3
	AH24030	150	145	90	15	11	M155X3
	AHX3130	150	145	96	15	5	M165X3
	AHX3230	150	145	114	17	5	M165X3
	AH24130	150	145	115	15	11	M160X3
	AHX2330	150	145	135	24	5	M165X3
	AH3330	150	145	152	24	5	M165X3
150	**AH232**	160	150	64	15	5	M170X3
	AH3032	160	150	77	16	5	M170X3
	AH332	160	150	88	16	5	M180X3
	AH24032	160	150	95	15	11	M170X3
	AH3132	160	150	103	16	5	M180X3
	AH24132	160	150	124	15	11	M170X3
	AH3232	160	150	124	20	6	M180X3
	AH2332	160	150	140	24	6	M180X3
	AH3332	160	150	160	24	6	M180X3
160	**AH3834**	170	160	48	13	5	M180X3
	AH234	170	160	69	16	5	M180X3
	AH3034	170	160	85	17	5	M180X3
	AH334	170	160	93	17	5	M190X3
	AH3134	170	160	104	16	5	M190X3
	AH24034	170	160	106	16	11	M180X3
	AH24134	170	160	125	16	11	M180X3
	AH3234	170	160	134	24	6	M190X3
	AH2334	170	160	146	24	6	M190X3
	AH3334	170	160	164	24	6	M190X3
170	**AH3836**	180	170	48	13	5	M190X3
	AH3936	180	170	66	13	5	M190X3
	AH236	180	170	69	16	5	M190X3
	AH3036	180	170	92	17	6	M190X3
	AH2236	180	170	105	17	5	M200X3
	AH24036	180	170	116	16	11	M190X3
	AH3136	180	170	116	19	6	M200X3
	AH24136	180	170	134	16	11	M190X3
	AH3236	180	170	140	25	6	M200X3
	AH2336	180	170	154	26	6	M200X3
	AH3336	180	170	176	26	6	M200X3
180	**AH3838**	190	180	51	13	5	M200X3
	AH3938	190	180	66	13	5	M200X3
	AH238	190	180	73	17	5	Tr205X4
	AH3038	190	180	96	18	6	Tr205X4
	AH2238	190	180	112	18	5	Tr210X4
	AH24038	190	180	118	18	13	M200X3
	AH3138	190	180	125	20	6	Tr210X4
	AH3238	190	180	145	25	7	Tr210X4
	AH24138	190	180	146	18	13	M200X3
	AH2338	190	180	160	26	7	Tr210X4
	AH3338	190	180	181	26	7	Tr210X4
190	**AH3840**	200	190	54	16	6	Tr210X4
	AH240	200	190	77	18	5	Tr215X4
	AH3940	200	190	77	16	6	Tr210X4

- warehouse - order - phone

Weight [kg]	Basic makes*		Sleeve No.
	-	H	
1,5			**AHX330**
1,11			**AH24030**
1,79			**AHX3130**
2,22			**AHX3230**
1,62			**AH24130**
2,82			**AHX2330**
3,34			**AH3330**
1,7			**AH232**
2,06			**AH3032**
2,69			**AH332**
2,27			**AH24032**
3,21			**AH3132**
3			**AH24132**
4,08			**AH3232**
4,72			**AH2332**
5,51			**AH3332**
1,36			**AH3834**
1,98			**AH234**
2,43			**AH3034**
3,07			**AH334**
3,4			**AH3134**
2,8			**AH24034**
3,21			**AH24134**
4,8			**AH3234**
5,25			**AH2334**
6,05			**AH3334**
1,44			**AH3836**
1,91			**AH3936**
2,14			**AH236**
2,81			**AH3036**
3,73			**AH2236**
3,18			**AH24036**
4,22			**AH3136**
3,72			**AH24136**
5,32			**AH3236**
5,83			**AH2336**
7,04			**AH3336**
1,6			**AH3838**
2,02			**AH3938**
2,52			**AH238**
3,32			**AH3038**
4,25			**AH2238**
3,46			**AH24038**
4,89			**AH3138**
5,9			**AH3238**
4,37			**AH24138**
6,63			**AH2338**
7,71			**AH3338**
1,84			**AH3840**
2,87			**AH240**
2,62			**AH3940**

* Other products also available



https://nppnovoteh.com

18. BEARING SLEEVE

18.1. Withdrawal sleeves



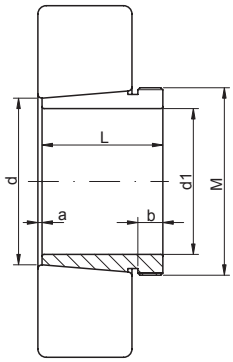

AH..

190 – 300 mm

Shaft [mm]	Sleeve No.	Dimensions [mm]					
		d	d1	L	b	a	M-thread
190 cont.	**AH3040**	200	190	102	19	6	Tr215X4
	AH2240	200	190	118	19	5	Tr220X4
	AH24040	200	190	127	18	13	Tr210X4
	AH3140	200	190	134	21	6	Tr220X4
	AH3240	200	190	153	24	7	Tr220X4
	AH24140	200	190	158	18	13	Tr210X4
	AH2340	200	190	170	30	7	Tr220X4
	AH3340	200	190	195	30	7	Tr220X4
200	**AH3944**	220	200	77	16	6	Tr230X4
	AH244	220	200	85	18	6	Tr235X4
	AH3044	220	200	111	20	6	Tr235X4
	AH2244	220	200	130	20	6	Tr240X4
	AH24044	220	200	138	20	14	Tr230X3
	AH3144	220	200	145	23	6	Tr240X4
	AH24144	220	200	170	20	14	Tr230X4
	AH2344	220	200	181	30	8	Tr240X4
220	**AH3948**	240	220	77	16	6	Tr250X4
	AH248	240	220	96	22	6	Tr260X4
	AH3048	240	220	116	21	7	Tr260X4
	AH24048	240	220	138	20	15	Tr250X4
	AH2248	240	220	144	21	6	Tr260X4
	AH3148	240	220	154	25	7	Tr260X4
	AH24148	240	220	180	20	15	Tr260X4
	AH2348	240	220	189	30	8	Tr260X4
240	**AH3952**	260	240	94	18	6	Tr275X4
	AH252	260	240	105	23	6	Tr280X4
	AH3052	260	240	128	23	7	Tr280X4
	AH2252	260	240	155	23	6	Tr290X4
	AH24052	260	240	162	20	16	Tr270X4
	AH3152	260	240	172	26	7	Tr290X4
	AH24152	260	240	202	22	16	Tr280X4
	AH2352	260	240	205	30	8	Tr290X4
260	**AH3956**	280	260	94	18	6	Tr300X4
	AH256	280	260	105	23	8	Tr300X4
	AH3056	280	260	131	24	8	Tr300X4
	AH2256	280	260	155	24	8	Tr310X5
	AH24056	280	260	162	22	17	Tr300X4
	AH3156	280	260	175	28	8	Tr310X5
	AH24156	280	260	202	22	17	Tr300X4
	AH2356	280	260	212	30	8	Tr310X5
280	**AH3960**	300	280	112	21	7	Tr315X5
	AH3060	300	280	145	26	8	Tr320X5
	AH2260	300	280	170	26	8	Tr330X5
	AH24060	300	280	184	24	18	Tr310X5
	AH3160	300	280	192	30	8	Tr330X5
	AH24160	300	280	224	24	18	Tr320X5
	AH3260	300	280	228	34	8	Tr330X5
300	**AH3964**	320	300	112	21	7	Tr340X5
	AH3064	320	300	149	27	8	Tr345X5
	AH2264	320	300	180	27	10	Tr350X5

- warehouse - order - phone

Weight [kg]	Basic makes*		Sleeve No.
	-	H	
3,8	●	●	**AH3040**
4,68	●	●	**AH2240**
3,93	●	●	**AH24040**
5,49	●	●	**AH3140**
6,68	●	●	**AH3240**
5,1	●	●	**AH24140**
7,54	●	●	**AH2340**
8,95	●	●	**AH3340**
4,65	●	●	**AH3944**
5,49	●	●	**AH244**
7,4	●	●	**AH3044**
9,1	●	●	**AH2244**
8,25	●	●	**AH24044**
10,4	●	●	**AH3144**
10,2	●	●	**AH24144**
13,5	●	●	**AH2344**
5,29	●	●	**AH3948**
7,34	●	●	**AH248**
8,75	●	●	**AH3048**
8,86	●	●	**AH24048**
11,1	●	●	**AH2248**
12	●	●	**AH3148**
12,5	●	●	**AH24148**
15,5	●	●	**AH2348**
7,16	●	●	**AH3952**
8,8	●	●	**AH252**
10,7	●	●	**AH3052**
14	●	●	**AH2252**
11,8	●	●	**AH24052**
16,2	●	●	**AH3152**
15,4	●	●	**AH24152**
19,6	●	●	**AH2352**
8,19	●	●	**AH3956**
9,42	●	●	**AH256**
12	●	●	**AH3056**
15,2	●	●	**AH2256**
12,4	●	●	**AH24056**
17,5	●	●	**AH3156**
16,3	●	●	**AH24156**
21,6	●	●	**AH2356**
10,1	●	●	**AH3960**
14,4	●	●	**AH3060**
18,1	●	●	**AH2260**
15,3	●	●	**AH24060**
20,8	●	●	**AH3160**
20	●	●	**AH24160**
26	●	●	**AH3260**
11,4	●	●	**AH3964**
16	●	●	**AH3064**
20,2	●	●	**AH2264**

* Other products also available



https://nppnovoteh.com

18. BEARING SLEEVE

18.1. Withdrawal sleeves



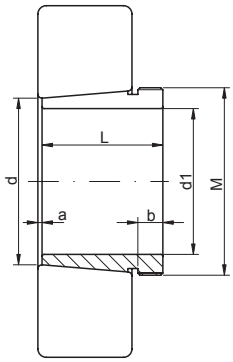

AH..

300 – 460 mm

Shaft [mm]	Sleeve No.	Dimensions [mm]					
		d	d1	L	b	a	M-thread
300 cont.	**AH24064**	320	300	184	24	18	Tr330X5
	AH3164	320	300	209	31	8	Tr350X5
	AH24164	320	300	242	24	18	Tr340X5
	AH3264	320	300	246	36	8	Tr350X5
320	**AH3968**	340	320	112	21	7	Tr355X5
	AH3068	340	320	162	28	9	Tr365X5
	AH24068	340	320	206	26	19	Tr360X5
	AH3168	340	320	225	33	9	Tr370X5
	AH3268	340	320	264	38	9	Tr370X5
	AH24168	340	320	269	26	19	Tr360X5
340	**AH3972**	360	340	112	21	7	Tr375X5
	AH3072	360	340	167	30	9	Tr385X5
	AH24072	360	340	206	26	20	Tr380X5
	AH3172	360	340	229	35	9	Tr400X5
	AH24172	360	340	269	26	20	Tr380X5
	AH3272	360	340	274	40	9	Tr380X5
360	**AH3976**	380	360	130	22	8	Tr395X5
	AH3076	380	360	170	31	10	Tr410X5
	AH24076	380	360	208	28	20	Tr400X5
	AH3176	380	360	232	36	10	Tr420X5
	AH24176	380	360	271	28	20	Tr400X5
	AH3276	380	360	284	42	10	Tr420X5
380	**AH3980**	400	380	130	22	8	Tr415X5
	AH3080	400	380	183	33	10	Tr430X5
	AH24080	400	380	228	28	20	Tr420X5
	AH3180	400	380	240	38	10	Tr440X5
	AH24180	400	380	278	28	20	Tr420X5
	AH3280	400	380	302	44	10	Tr440X5
400	**AH3984**	420	400	130	22	8	Tr435X5
	AH3084	420	400	186	34	10	Tr450X5
	AH24084	420	400	230	30	22	Tr440X5
	AH3184	420	400	266	40	10	Tr460X5
	AH24184	420	400	310	30	22	Tr440X5
	AH3284	420	400	321	46	10	Tr440X5
420	**AHX3088**	440	420	194	35	11	Tr470x5
	AH24088	440	420	242	30	22	Tr460X5
	AHX3188	440	420	270	42	11	Tr480X5
	AH24188	440	420	310	30	22	Tr460X5
	AH3288	440	420	330	48	11	Tr460X5
440	**AH3992**	460	440	145	25	8	Tr480X5
	AHX3092	460	440	202	37	11	Tr490x5
	AH24092	460	440	250	32	23	Tr480X5
	AHX3192	460	440	285	43	11	Tr510X6
	AH24192	460	440	332	32	23	Tr480X5
	AH3292	460	440	349	50	11	Tr480X5
460	**AH3996**	480	460	158	28	9	Tr500X5
	AHX3096	480	460	205	38	12	Tr520x6
	AH24096	480	460	250	32	23	Tr500X5

- warehouse - order - phone

Weight [kg]	Basic makes*		Sleeve No.
	-	H	
16,6			**AH24064**
24,5			**AH3164**
21,4			**AH24164**
30,6			**AH3264**
11,4			**AH3968**
19,5			**AH3068**
21,7			**AH24068**
29			**AH3168**
35,2			**AH3268**
27,1			**AH24168**
12,1			**AH3972**
21			**AH3072**
22,7			**AH24072**
33			**AH3172**
29,6			**AH24172**
37,5			**AH3272**
15,2			**AH3976**
23,2			**AH3076**
23,7			**AH24076**
35,7			**AH3176**
31,3			**AH24176**
45,6			**AH3276**
16			**AH3980**
27,3			**AH3080**
27,1			**AH24080**
39,5			**AH3180**
34,5			**AH24180**
51,4			**AH3280**
17			**AH3984**
29			**AH3084**
29			**AH24084**
46,5			**AH3184**
40,3			**AH24184**
53,5			**AH3284**
32			**AHX3088**
31,9			**AH24088**
49,8			**AHX3188**
42,3			**AH24188**
58,8			**AH3288**
22,5			**AH3992**
35,2			**AHX3092**
34,7			**AH24092**
57,9			**AHX3192**
47,4			**AH24192**
66,2			**AH3292**
25,1			**AH3996**
39,2			**AHX3096**
36,6			**AH24096**

* Other products also available



https://nppnovoteh.com

18. BEARING SLEEVE

18.1. Withdrawal sleeves



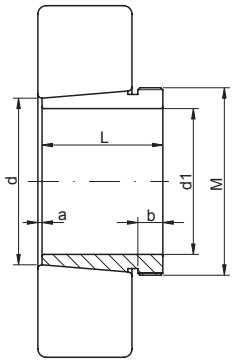

AH..

460 – 710 mm

Shaft [mm]	Sleeve No.	Dimensions [mm]					
		d	d1	L	b	a	M-thread
460 cont.	**AHX3196**	480	460	295	45	12	Tr530X6
	AH24196	480	460	343	35	25	Tr500X5
	AH3296	480	460	364	52	12	Tr500X5
480	**AH39/500**	500	480	162	32	10	Tr520X6
	AHX30/500	500	480	209	40	12	Tr530X6
	AH240/500	500	480	253	35	23	Tr520X6
	AHX31/500	500	480	313	47	12	Tr530X6
	AH241/500	500	480	362	37	25	Tr520X6
	AHX32/500	500	480	393	54	12	Tr530X6
500	**AH39/530**	530	500	175	37	10	Tr550X6
	AHX30/530	530	500	230	45	12	Tr560X6
	AH240/530	530	500	290	40	25	Tr550X6
	AH241/530	530	500	375	40	25	Tr550X6
	AHX32/530	530	500	412	57	12	Tr580X6
530	**AH39/560**	560	530	180	37	10	Tr580X6
	AHX30/560	560	530	240	45	12	Tr590X6
	AH240/560	560	530	298	40	25	Tr580X6
	AHX31/560	560	530	335	55	12	Tr600X6
	AH241/560	560	530	400	45	28	Tr580X6
	AHX32/560	560	530	422	57	12	Tr610X6
570	**AH39/600**	600	570	192	38	10	Tr625X6
	AHX30/600	600	570	245	45	14	Tr630X6
	AH240/600	600	570	317	45	30	Tr625X6
	AHX31/600	600	570	355	55	14	Tr630X6
	AH241/600	600	570	425	50	30	Tr625X6
	AHX32/600	600	570	445	57	14	Tr630X6
600	**AH39/630**	630	600	210	40	12	Tr655X6
	AH30/630	630	600	258	46	14	Tr670X6
	AH240/630	630	600	335	45	30	Tr655X6
	AH31/630	630	600	375	60	14	Tr670X6
	AH241/630	630	600	450	50	30	Tr655X6
	AH32/630	630	600	475	63	14	Tr670X6
630	**AH39/670**	670	630	216	41	12	Tr695X6
	AH30/670	670	630	280	50	14	Tr710X7
	AH240/670	670	630	358	50	30	Tr695X6
	AH241/670	670	630	467	55	30	Tr695X6
	AH32/670	670	630	500	62	14	Tr710X7
670	**AH39/710**	710	670	228	43	12	Tr740X7
	AH30/710	710	670	286	50	16	Tr750X7
	AH240/710	710	670	365	50	33	Tr740X7
	AH241/710	710	670	493	55	33	Tr740X7
	AH32/710	710	670	515	65	16	Tr750X7
680	**AH38/710**	710	680	163	43	12	Tr740X7
710	**AH39/750**	750	710	234	44	12	Tr780X7
	AH240/750	750	710	385	50	35	Tr780X7
	AH31/750	750	710	425	60	16	Tr800X7
	AH241/750	750	710	530	55	35	Tr780X7

- warehouse - order - phone

Weight [kg]	Basic makes*		Sleeve No.
	-	H	
63,1			**AHX3196**
53,1			**AH24196**
73,3			**AH3296**
28			**AH39/500**
40			**AHX30/500**
39			**AH240/500**
65,3			**AHX31/500**
59			**AH241/500**
87,4			**AHX32/500**
43,4			**AH39/530**
61,9			**AHX30/530**
66,9			**AH240/530**
88,4			**AH241/530**
125			**AHX32/530**
46,2			**AH39/560**
68,6			**AHX30/560**
72,3			**AH240/560**
106			**AHX31/560**
101			**AH241/560**
144			**AHX32/560**
54,6			**AH39/600**
74,5			**AHX30/600**
86			**AH240/600**
118			**AHX31/600**
118			**AH241/600**
157			**AHX32/600**
62,8			**AH39/630**
87,8			**AH30/630**
95,5			**AH240/630**
138			**AH31/630**
135			**AH241/630**
185			**AH32/630**
85,5			**AH39/670**
123			**AH30/670**
136			**AH240/670**
184			**AH241/670**
249			**AH32/670**
99,5			**AH39/710**
21,3			**AH30/710**
150			**AH240/710**
209			**AH241/710**
275			**AH32/710**
58,6			**AH38/710**
108			**AH39/750**
170			**AH240/750**
236			**AH31/750**
241			**AH241/750**

* Other products also available



https://nppnovoteh.com

18. BEARING SLEEVE

18.1. Withdrawal sleeves



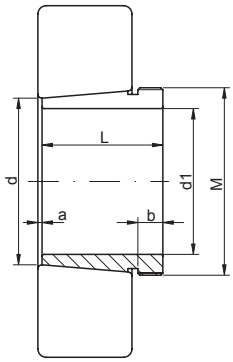

AH..

750 – 1450 mm

Shaft [mm]	Sleeve No.	Dimensions [mm]					
		d	d1	L	b	a	M-thread
750	**AH39/800**	800	750	245	45	12	Tr830X7
	AH30/800	800	750	308	53	18	Tr850X7
	AH240/800	800	750	395	50	40	Tr830X7
	AH31/800	800	750	438	63	18	Tr850X7
	AH241/800	800	750	530	55	40	Tr830X7
	AH32/800	800	750	550	62	18	Tr850X7
800	**AH39/850**	850	800	258	50	12	Tr880X7
	AH240/850	850	800	418	53	40	Tr880X7
	AH241/850	850	800	560	60	40	Tr880X7
850	**AH39/900**	900	850	265	51	12	Tr930X8
	AH240/900	900	850	430	55	45	Tr930X8
	AH241/900	900	850	575	60	45	Tr930X8
	AH240/950	950	850	467	55	45	Tr980X8
	AH241/950	950	850	605	60	45	Tr980X8
860	**AH38/900**	900	860	193	51	12	Tr930X8
900	**AH39/950**	950	900	282	51	15	Tr980X8
950	**AH39/1000**	1000	950	296	52	15	Tr1060X8
	AH240/1000	1000	950	469	57	50	Tr1035X8
	AH31/1000	1000	950	525	63	22	Tr1060X8
	AH241/1000	1000	950	645	65	50	Tr1035X8
1000	**AH39/1060**	1060	1000	310	52	15	Tr1095X8
	AH240/1060	1060	1000	498	60	50	Tr1095X8
	AH241/1060	1060	1000	665	65	50	Tr1095X8
1060	**AH240/1120**	1120	1060	527	65	50	Tr1155X8
	AH241/1120	1120	1060	705	75	50	Tr1180X8
1070	**AH39/1120**	1120	1070	310	52	15	Tr1180X8
1120	**AH240/1180**	1180	1120	540	65	50	Tr1215X8
1130	**AH39/1180**	1180	1130	330	55	15	Tr1215X8
1180	**AH240/1250**	1250	1180	570	70	50	Tr1285X8
1200	**AH39/1250**	1250	1200	340	55	18	Tr1320X8
1250	**AH240/1320**	1320	1250	600	70	50	Tr1355X8
1270	**AH39/1320**	1320	1270	360	55	18	Tr1400X8
1320	**AH240/1400**	1400	1320	615	70	50	Tr1435X8
1350	**AH39/1400**	1400	1350	380	60	20	Tr1500X8
1450	**AH39/1500**	1500	1450	400	60	20	Tr1600X8

- warehouse - order - phone

Weight [kg]	Basic makes*		Sleeve No.
	-	H	
147	●	●	**AH39/800**
200	●	●	**AH30/800**
223	●	●	**AH240/800**
299	●	●	**AH31/800**
307	●	●	**AH241/800**
396	●	●	**AH32/800**
164	●	●	**AH39/850**
252	●	●	**AH240/850**
344	●	●	**AH241/850**
182	●	●	**AH39/900**
276	●	●	**AH240/900**
383	●	●	**AH241/900**
318	●	●	**AH240/950**
426	●	●	**AH241/950**
109	●	●	**AH38/900**
206	●	●	**AH39/950**
247	●	●	**AH39/1000**
353	●	●	**AH240/1000**
482	●	●	**AH31/1000**
482	●	●	**AH241/1000**
294	●	●	**AH39/1060**
440	●	●	**AH240/1060**
605	●	●	**AH241/1060**
490	●	●	**AH240/1120**
727	●	●	**AH241/1120**
291	●	●	**AH39/1120**
530	●	●	**AH240/1180**
306	●	●	**AH39/1180**
680	●	●	**AH240/1250**
370	●	●	**AH39/1250**
760	●	●	**AH240/1320**
425	●	●	**AH39/1320**
930	●	●	**AH240/1400**
504	●	●	**AH39/1400**
569	●	●	**AH39/1500**

* Other products also available



https://nppnovoteh.com

18. BEARING SLEEVE

18.2. Adapter sleeves



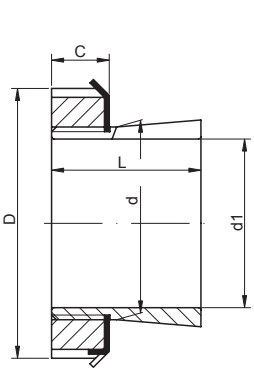

toothed washer

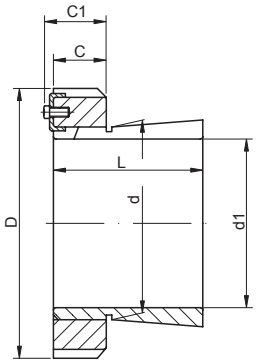

shaped washer

14 – 65 mm

Shaft [mm]	Sleeve No.	Dimensions [mm]						Weight [kg]
		d	d1	L	D	C	C1	
14	**H203**	17	14	21	28	6	-	0,032
17	**H204**	20	17	24	32	7	-	0,041
	H304	20	17	28	32	7	-	0,045
	H2304	20	17	31	32	7	-	0,049
20	**H205**	25	20	26	38	8	-	0,070
	H305	25	20	29	38	8	-	0,075
	H2305	25	20	35	38	8	-	0,087
25	**H206**	30	25	27	45	8	-	0,099
	H306	30	25	31	45	8	-	0,109
	H2306	30	25	38	45	8	-	0,126
30	**H207**	35	30	29	52	9	-	0,125
	H307	35	30	35	52	9	-	0,142
	H2307	35	30	43	52	9	-	0,165
35	**H208**	40	35	31	58	10	-	0,174
	H308	40	35	36	58	10	-	0,189
	H2308	40	35	46	58	10	-	0,224
	H3308	40	35	50	58	11	-	0,261
40	**H209**	45	40	33	65	11	-	0,227
	H309	45	40	39	65	11	-	0,248
	H2309	45	40	50	65	11	-	0,280
	H3309	45	40	54	65	12	-	0,339
45	**H210**	50	45	35	70	12	-	0,274
	H310	50	45	42	70	12	-	0,303
	H2310	50	45	55	70	12	-	0,382
	H3310	50	45	60	70	13	-	0,379
50	**H211**	55	50	37	75	12	-	0,308
	H311	55	50	45	75	12	-	0,345
	H2311	55	50	59	75	12	-	0,420
	H3311	55	50	65	75	13	-	0,509
55	**H212**	60	55	38	80	13	-	0,346
	H312	60	55	47	80	13	-	0,394
	H2312	60	55	62	80	13	-	0,481
	H3312	60	55	70	80	13	-	0,591
60	**H213**	65	60	40	85	14	-	0,401
	H313	65	60	50	85	14	-	0,458
	H2313	65	60	65	85	14	-	0,557
	H3313	65	60	75	85	14	-	0,629
	H214	70	60	41	92	14	-	0,593
	H314	70	60	52	92	14	-	0,723
	H2314	70	60	68	92	14	-	0,897
	H3314	70	60	81	92	14	-	1,050
65	**H215**	75	65	43	98	15	-	0,707
	H315	75	65	55	98	15	-	0,831
	H2315	75	65	73	98	15	-	1,050
	H3315	75	65	87	98	15	-	1,360

- warehouse - order - phone

Nut	Washer	Basic makes*		Sleeve No.
KM ; HM	MB ; MS	-	H	
KM03	MB03			**H203**
KM04	MB04			**H204**
KM04	MB04			**H304**
KM04	MB04			**H2304**
KM05	MB05			**H205**
KM05	MB05			**H305**
KM05	MB05			**H2305**
KM06	MB06			**H206**
KM06	MB06			**H306**
KM06	MB06			**H2306**
KM07	MB07			**H207**
KM07	MB07			**H307**
KM07	MB07			**H2307**
KM08	MB08			**H208**
KM08	MB08			**H308**
KM08	MB08			**H2308**
KM08	MB08			**H3308**
KM09	MB09			**H209**
KM09	MB09			**H309**
KM09	MB09			**H2309**
KM09	MB09			**H3309**
KM10	MB10			**H210**
KM10	MB10			**H310**
KM10	MB10			**H2310**
KM10	MB10			**H3310**
KM11	MB11			**H211**
KM11	MB11			**H311**
KM11	MB11			**H2311**
KM11	MB11			**H3311**
KM12	MB12			**H212**
KM12	MB12			**H312**
KM12	MB12			**H2312**
KM12	MB12			**H3312**
KM13	MB13			**H213**
KM13	MB13			**H313**
KM13	MB13			**H2313**
KM13	MB13			**H3313**
KM14	MB14			**H214**
KM14	MB14			**H314**
KM14	MB14			**H2314**
KM14	MB14			**H3314**
KM15	MB15			**H215**
KM15	MB15			**H315**
KM15	MB15			**H2315**
KM15	MB15			**H3315**

* Other products also available



18. BEARING SLEEVE

18.2. Adapter sleeves



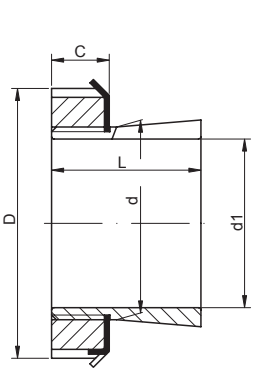

toothed washer

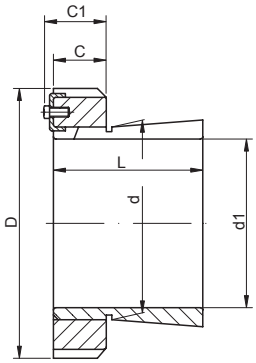

shaped washer

70 – 135 mm

Shaft [mm]	Sleeve No.	Dimensions [mm]						Weight [kg]
		d	d1	L	D	C	C1	
70	**H216**	80	70	46	105	17	-	0,882
	H316	80	70	59	105	17	-	1,030
	H2316	80	70	78	105	17	-	1,280
	H3316	80	70	89	105	17	-	1,560
75	**H217**	85	75	50	110	18	-	1,020
	H317	85	75	63	110	18	-	1,180
	H2317	85	75	82	110	18	-	1,450
	H3317	85	75	95	110	18	-	1,790
80	**H218**	90	80	52	120	18	-	1,190
	H318	90	80	65	120	18	-	1,370
	H2318	90	80	86	120	18	-	1,690
	H3318	90	80	95	120	18	-	2,000
85	**H219**	95	85	55	125	19	-	1,370
	H319	95	85	68	125	19	-	1,560
	H2319	95	85	90	125	19	-	1,920
	H3319	95	85	101	125	19	-	2,270
90	**H220**	100	90	58	130	20	-	1,490
	H320	100	90	71	130	20	-	1,690
	H3120	100	90	76	130	20	-	1,780
	H2320	100	90	97	130	20	-	2,150
	H3320	100	90	106	130	20	-	2,550
95	**H221**	105	95	60	140	20	-	1,720
	H321	105	95	74	140	20	-	1,950
	H2321	105	95	101	140	20	-	2,460
	H3321	105	95	111	140	20	-	2,880
100	**H222**	110	100	63	145	21	-	1,930
	H322	110	100	77	145	21	-	2,180
	H3122	110	100	81	145	21	-	2,250
	H2322	110	100	105	145	21	-	2,740
	H3322	110	100	117	145	21	-	3,230
110	**H3924**	120	110	60	145	22	-	1,860
	H3024	120	110	72	145	22	-	1,930
	H3124	120	110	88	155	22	-	2,640
	H2324	120	110	112	155	22	-	3,190
	H3324	120	110	132	155	22	-	3,980
115	**H3926**	130	115	65	155	23	-	2,650
	H3026	130	115	80	155	23	-	2,850
	H3126	130	115	92	165	23	-	3,660
	H2326	130	115	121	165	23	-	4,600
	H3326	130	115	139	165	23	-	5,600
125	**H3928**	140	125	66	165	24	-	2,940
	H3028	140	125	82	165	24	-	3,160
	H3128	140	125	97	180	24	-	4,340
	H2328	140	125	131	180	24	-	5,550
	H3328	140	125	147	180	24	-	6,630
135	**H3930**	150	135	76	180	26	-	3,850

- warehouse - order - phone

Nut	Washer	Basic makes*		Sleeve No.
KM ; HM	MB ; MS	-	H	
KM16	MB16			**H216**
KM16	MB16			**H316**
KM16	MB16			**H2316**
KM16	MB16			**H3316**
KM17	MB17			**H217**
KM17	MB17			**H317**
KM17	MB17			**H2317**
KM17	MB17			**H3317**
KM18	MB18			**H218**
KM18	MB18			**H318**
KM18	MB18			**H2318**
KM18	MB18			**H3318**
KM19	MB19			**H219**
KM19	MB19			**H319**
KM19	MB19			**H2319**
KM19	MB19			**H3319**
KM20	MB20			**H220**
KM20	MB20			**H320**
KM20	MB20			**H3120**
KM20	MB20			**H2320**
KM20	MB20			**H3320**
KM21	MB21			**H221**
KM21	MB21			**H321**
KM21	MB21			**H2321**
KM21	MB21			**H3321**
KM22	MB22			**H222**
KM22	MB22			**H322**
KM22	MB22			**H3122**
KM22	MB22			**H2322**
KM22	MB22			**H3322**
KM24	MB24			**H3924**
KM24	MB24			**H3024**
KM24	MB24			**H3124**
KM24	MB24			**H2324**
KM24	MB24			**H3324**
KM26	MB26			**H3926**
KM26	MB26			**H3026**
KM26	MB26			**H3126**
KM26	MB26			**H2326**
KM26	MB26			**H3326**
KM28	MB28			**H3928**
KM28	MB28			**H3028**
KM28	MB28			**H3128**
KM28	MB28			**H2328**
KM28	MB28			**H3328**
KM30	MB30	M		**H3930**

* Other products also available



https://nppnovoteh.com

18. BEARING SLEEVE

18.2. Adapter sleeves



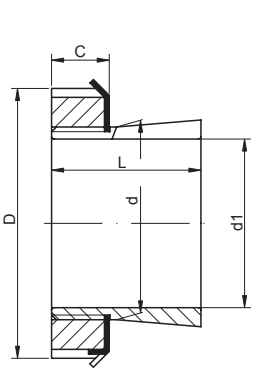

toothed washer

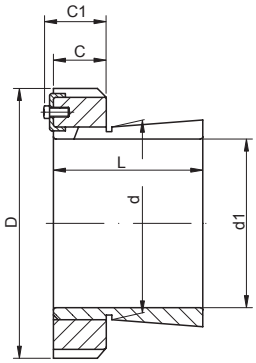

shaped washer

135 – 240 mm

Shaft [mm]	Sleeve No.	Dimensions [mm]						Weight [kg]
		d	d1	L	D	C	C1	
135 cont.	**H3030**	150	135	87	180	26	-	3,890
	H3130	150	135	111	195	26	-	5,520
	H2330	150	135	139	195	26	-	6,630
	H3330	150	135	159	195	26	-	8,070
140	**H3932**	160	140	78	190	28	-	4,990
	H3032	160	140	93	190	28	-	5,210
	H3132	160	140	119	210	28	-	7,670
	H2332	160	140	147	210	28	-	9,140
	H3332	160	140	170	210	28	-	11,100
150	**H3834**	170	150	65	200	29	-	4,660
	H3934	170	150	79	200	29	-	5,360
	H3034	170	150	101	200	29	-	5,990
	H3134	170	150	122	220	29	-	8,380
	H2334	170	150	154	220	29	-	10,200
	H3334	170	150	175	220	29	-	12,200
160	**H3836**	180	160	66	210	30	-	5,130
	H3936	180	160	87	210	30	-	6,250
	H3036	180	160	109	210	30	-	6,830
	H3136	180	160	131	230	30	-	9,500
	H2336	180	160	161	230	30	-	11,300
	H3336	180	160	186	230	30	-	13,800
170	**H3838**	190	170	70	220	31	-	5,720
	H3938	190	170	70	220	31	-	5,720
	H3038	190	170	112	220	31	-	7,450
	H24038	190	170	143	220	31	-	8,820
	H3138	190	170	141	240	31	-	10,800
	H2338	190	170	169	240	31	-	12,600
	H3338	190	170	193	240	31	-	15,400
180	**H3840**	200	180	72	240	32	-	6,790
	H3940	200	180	98	240	32	-	7,820
	H3040	200	180	120	240	32	-	9,190
	H24040	200	180	153	240	32	-	10,500
	H3140	200	180	150	250	32	-	12,100
	H2340	200	180	176	250	32	-	13,900
	H3340	200	180	204	250	32	-	17,300
200	**H3944**	220	200	96	260	-	40	8,930
	H3044	220	200	126	260	30	41	10,300
	H3144	220	200	161	280	35	-	14,700
	H2344	220	200	186	280	35	-	16,700
220	**H3948**	240	220	101	290	-	45	11,700
	H3048	240	220	133	290	34	46	13,200
	H24048	240	220	167	290	-	45	14,800
	H3148	240	220	172	300	37	-	17,300
	H2348	240	220	199	300	37	-	19,700
240	**H3952**	260	240	116	310	-	45	14,000
	H3052	260	240	145	310	34	46	15,300
	H3152	260	240	190	330	39	-	22,000
	H2352	260	240	211	330	39	-	24,200

- warehouse - order - phone

Nut	Washer	Basic makes*		Sleeve No.
KM ; HM	MB ; MS	-	H	
KM30	MB30			**H3030**
KM30	MB30			**H3130**
KM30	MB30			**H2330**
KM30	MB30			**H3330**
KM32	MB32			**H3932**
KM32	MB32			**H3032**
KM32	MB32			**H3132**
KM32	MB32			**H2332**
KM32	MB32			**H3332**
KM34	MB34			**H3834**
KM34	MB34			**H3934**
KM34	MB34			**H3034**
KM34	MB34			**H3134**
KM34	MB34			**H2334**
KM34	MB34			**H3334**
KM36	MB36			**H3836**
KM36	MB36			**H3936**
KM36	MB36			**H3036**
KM36	MB36			**H3136**
KM36	MB36			**H2336**
KM36	MB36			**H3336**
KM38	MB38			**H3838**
KM38	MB38			**H3938**
KM38	MB38			**H3038**
KM38	MB38			**H24038**
KM38	MB38			**H3138**
KM38	MB38			**H2338**
KM38	MB38			**H3338**
KM40	MB40			**H3840**
KM40	MB40			**H3940**
KM40	MB40			**H3040**
KM40	MB40			**H24040**
KM40	MB40			**H3140**
KM40	MB40			**H2340**
KM40	MB40			**H3340**
HM3044	MS3044			**H3944**
HM3044	MS3044			**H3044**
HM44	MB44			**H3144**
KM44	MB44			**H2344**
HM3048	MS3048			**H3948**
HM3048	MS3052-48			**H3048**
HM3048	MS3048			**H24048**
HM48	MB48			**H3148**
KM48	MB48			**H2348**
HM3052	MS3048			**H3952**
HM3052	MS3052-48			**H3052**
HM52	MB52			**H3152**
KM52	MB52			**H2352**

* Other products also available



https://nppnovoteh.com

18. BEARING SLEEVE

18.2. Adapter sleeves



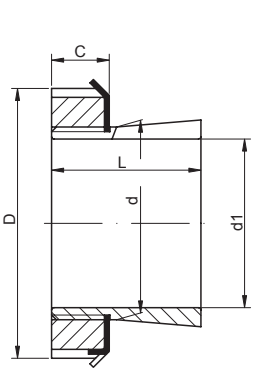

toothed washer

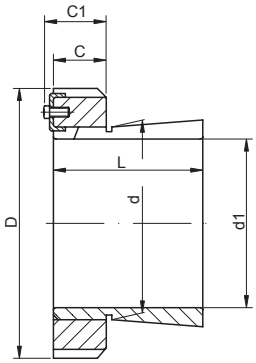

shaped washer

260 – 450 mm

Shaft [mm]	Sleeve No.	Dimensions [mm]						Weight [kg]
		d	d1	L	D	C	C1	
260	**H3956**	280	260	121	330	-	49	15,000
	H3056	280	260	152	330	38	50	17,700
	H24056	280	260	195	330	-	49	20,200
	H3156	280	260	195	350	41	-	24,500
	H2356	280	260	224	350	41	-	27,800
280	**H3960**	300	280	140	360	-	53	20,200
	H3060	300	280	168	360	42	54	22,800
	H3160	300	280	208	380	40	53	30,200
	H3260	300	280	240	380	40	53	34,100
300	**H3964**	320	300	140	380	-	56	21,500
	H3064	320	300	171	380	42	55	24,600
	H3164	320	300	226	400	42	56	34,900
	H3264	320	300	258	400	42	56	39,300
320	**H3968**	340	320	144	400	-	57	23,900
	H3068	340	320	187	400	45	58	28,700
	H24068	340	320	244	400	-	57	32,900
	H3168	340	320	254	440	55	72	49,500
	H3268	340	320	288	440	55	72	54,600
340	**H3972**	360	340	144	420	-	57	27,100
	H3072	360	340	188	420	45	58	30,500
	H3172	360	340	259	460	58	75	54,200
	H3272	360	340	299	460	58	75	60,600
360	**H3976**	380	360	164	450	-	62	32,300
	H3076	380	360	193	450	48	62	35,800
	H3176	380	360	264	490	60	77	61,700
	H3276	380	360	310	490	60	77	69,600
380	**H3980**	400	380	168	470	-	66	38,500
	H3080	400	380	210	470	52	66	41,300
	H3180	400	380	272	520	62	82	70,600
	H3280	400	380	328	520	62	82	81,000
400	**H3984**	420	400	168	490	-	66	37,400
	H3084	420	400	212	490	52	66	43,700
	H24084	420	400	274	490	-	66	49,100
	H3184	420	400	304	540	70	90	84,200
	H3284	420	400	352	540	70	90	94,000
410	**H3988**	440	410	189	520	-	75	61,900
	H3088	440	410	228	520	60	77	65,200
	H3188	440	410	307	560	70	90	104,000
	H3288	440	410	361	560	70	90	118,000
430	**H3992**	460	430	189	540	-	75	64,700
	H3092	460	430	234	540	60	77	69,500
	H3192	460	430	326	580	75	95	116,000
	H3292	460	430	382	580	75	95	132,000
450	**H3996**	480	450	200	560	-	75	70,200
	H3096	480	450	237	560	60	77	73,300
	H3196	480	450	335	620	75	95	133,000
	H3296	480	450	397	620	75	95	152,000

- warehouse - order - phone

Nut	Washer	Basic makes*		Sleeve No.
KM ; HM	MB ; MS	-	H	
HM3056	MS3056			**H3956**
HM3056	MS3056			**H3056**
HM3056	MS3056			**H24056**
HM56	MB56			**H3156**
KM56	MB56			**H2356**
HM3060	MS3060			**H3960**
HM3060	MS3060			**H3060**
HM3160	MS3160			**H3160**
HM3160	MS3160			**H3260**
HM3064	MS3064			**H3964**
HM3064	MS3068-64			**H3064**
HM3164	MS3164			**H3164**
HM3164	MS3164			**H3264**
HM3068	MS3064			**H3968**
HM3068	MS3068-64			**H3068**
HM3068	MS3068			**H24068**
HM3168	MS3172-68			**H3168**
HM3168	MS3168			**H3268**
HM3072	MS3072			**H3972**
HM3072	MS3072			**H3072**
HM3172	MS3172-68			**H3172**
HM3172	MS3172			**H3272**
HM3076	MS3076			**H3976**
HM3076	MS3080-76			**H3076**
HM3176	MS3176			**H3176**
HM3176	MS3176			**H3276**
HM3080	MS3076			**H3980**
HM3080	MS3080-76			**H3080**
HM3180	MS3184-80			**H3180**
HM3180	MS3180			**H3280**
HM3084	MS3084			**H3984**
HM3084	MS3084			**H3084**
HM3084	MS3084			**H24084**
HM3184	MS3184-80			**H3184**
HM3184	MS3180			**H3284**
HM3088	MS3088			**H3988**
HM3088	MS3092-88			**H3088**
HM3188	MS3192-88			**H3188**
HM3188	MS3188			**H3288**
HM3092	MS3088			**H3992**
HM3092	MS3092-88			**H3092**
HM3192	MS3192-88			**H3192**
HM3192	MS3188			**H3292**
HM3096	MS3096			**H3996**
HM3096	MS30/500-96			**H3096**
HM3196	MS3196			**H3196**
HM3196	MS3196			**H3296**

* Other products also available



https://nppnovoteh.com

18. BEARING SLEEVE

18.2. Adapter sleeves



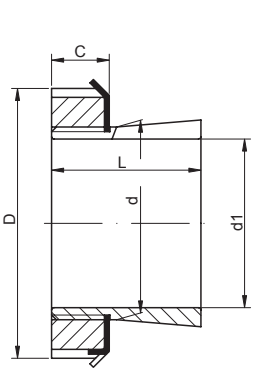

toothed washer

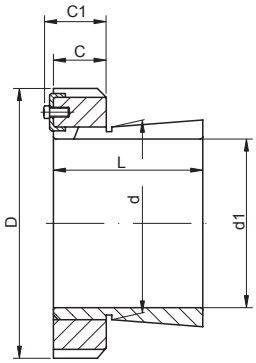

shaped washer

470 – 1000 mm

Shaft [mm]	Sleeve No.	Dimensions [mm]						Weight [kg]
		d	d1	L	D	C	C1	
470	**H39/500**	500	470	208	580	68	83	73,100
	H30/500	500	470	247	580	-	83	84,300
	H240/500	500	470	309	580	-	83	92,600
	H31/500	500	470	356	630	-	99	143,000
	H32/500	500	470	428	630	-	99	168,000
500	**H39/530**	530	500	216	630	68	89	86,900
	H30/530	530	500	265	630	-	89	110,000
	H240/530	530	500	343	630	-	89	115,000
	H31/530	530	500	364	670	-	102	160,000
530	**H39/560**	560	530	227	650	75	96	93,300
	H30/560	560	530	282	650	-	96	112,000
	H240/560	560	530	358	650	-	96	124,000
	H30/600	600	530	289	700	-	96	149,000
	H240/600	600	530	377	700	-	96	171,000
	H31/560	560	530	377	710	-	107	183,000
	H32/560	560	530	462	710	-	107	217,000
	H241/560	560	530	468	710	-	107	193,000
	H31/600	600	530	399	750	-	107	233,000
	H241/600	600	530	490	750	-	107	247,000
560	**H39/600**	600	560	239	700	75	96	127,000
600	**H39/630**	630	600	254	730	75	96	120,000
	H30/630	630	600	301	730	-	96	140,000
	H240/630	630	600	395	730	-	96	157,000
	H31/630	630	600	424	800	-	117	265,000
	H32/630	630	600	521	800	-	117	296,000
	H241/630	630	600	525	800	-	117	261,000
630	**H39/670**	670	630	264	780	80	101	163,000
	H30/670	670	630	324	780	-	101	194,000
	H240/670	670	630	418	780	-	101	218,000
	H31/670	670	630	456	850	-	128	343,000
	H241/670	670	630	548	850	-	128	352,000
670	**H39/710**	710	670	286	830	90	111	196,000
	H30/710	710	670	342	830	-	111	229,000
	H31/710	710	670	467	900	-	131	395,000
710	**H39/750**	750	710	291	870	90	111	209,000
	H31/750	750	710	493	950	-	137	433,000
750	**H39/800**	800	750	303	920	90	111	258,000
	H30/800	800	750	366	920	-	111	306,000
800	**H39/850**	850	800	308	980	90	115	289,000
850	**H39/900**	900	850	326	1030	100	125	330,000
	H30/900	900	850	400	1030	-	112	426,000
900	**H39/950**	950	900	344	1080	100	125	362,000
950	**H39/1000**	1000	950	358	1140	-	122	428,000
1000	**H39/1060**	1060	1000	372	1200	-	122	488,000

- warehouse - order - phone

Nut	Washer	Basic makes*		Sleeve No.
KM ; HM	MB ; MS	-	H	
HM30/500	MS3096			**H39/500**
HM300/500	MS300/500			**H30/500**
HM300/500	MS300/500			**H240/500**
HM31/500	MS31/500			**H31/500**
HM31/500	MS31/500			**H32/500**
HM30/530	MS30/530			**H39/530**
HM30/530	MS30/530			**H30/530**
HM30/530	MS30/530			**H240/530**
HM31/530	MS31/530			**H31/530**
HM30/560	MS30/560			**H39/560**
HM30/560	MS30/560			**H30/560**
HM30/560	MS30/560			**H240/560**
HM30/600	MS30/600			**H30/600**
HM30/600	MS30/600			**H240/600**
HM31/560	MS31/560			**H31/560**
HM31/560	MS31/560			**H32/560**
HM31/560	MS31/560			**H241/560**
HM31/600	MS31/600			**H31/600**
HM31/600	MS31/600			**H241/600**
HM30/600	MS30/530			**H39/600**
HM30/630	MS30/630			**H39/630**
HM30/630	MS30/630			**H30/630**
HM30/630	MS30/630			**H240/630**
HM31/630	MS31/630			**H31/630**
HM31/630	MS31/630			**H32/630**
HM31/630	MS31/630			**H241/630**
HM30/670	MS30/670			**H39/670**
HM30/670	MS30/670			**H30/670**
HM30/670	MS30/670			**H240/670**
HM31/670	MS31/670			**H31/670**
HM31/670	MS31/670			**H241/670**
HM30/710	MS30/710			**H39/710**
HM30/710	MS30/710			**H30/710**
HM31/710	MS31/710			**H31/710**
HM30/750	MS30/750			**H39/750**
HM31/750	MS31/750			**H31/750**
HM30/800	MS30/750			**H39/800**
HM30/800	MS30/800			**H30/800**
HM30/850	MS30/850			**H39/850**
HM30/900	MS30/850			**H39/900**
HM30/900	MS30/900			**H30/900**
HM30/950	MS30/950			**H39/950**
HM30/1000	MS30/1000			**H39/1000**
HM30/1060	MS30/1000			**H39/1060**

* Other products also available



https://nppnovoteh.com

18. BEARING SLEEVE

18.3. Lock nuts – type KM



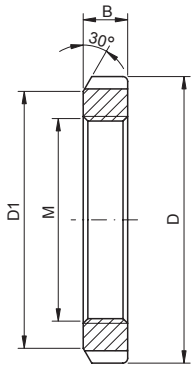

KM..

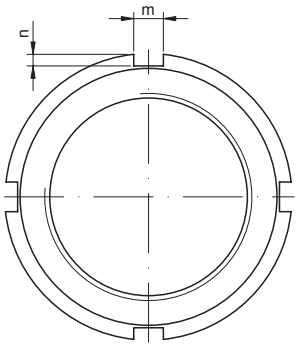

10 – 200 mm

d [mm]	Nut No.	Dimensions [mm]						
		d	M-thread	D	B	D1	m	n
10	**KM00**	10	M10X0,75	18	4	13,5	3	2
12	**KM01**	12	M12X1	22	4	17	3	2
15	**KM02**	15	M15X1	25	5	21	4	2
17	**KM03**	17	M17X1	28	5	24	4	2
20	**KM04**	20	M20X1	32	6	26	4	2
25	**KM05**	25	M25X1,5	38	7	32	5	2
30	**KM06**	30	M30X1,5	45	7	38	5	2
35	**KM07**	35	M35X1,5	52	8	44	6	2
40	**KM08**	40	M40X1,5	58	9	50	6	2,5
45	**KM09**	45	M45X1,5	65	10	56	6	2,5
50	**KM10**	50	M50X1,5	70	11	61	6	2,5
55	**KM11**	55	M55X2	75	11	67	7	3
60	**KM12**	60	M60X2	80	11	73	7	3
65	**KM13**	65	M65X2	85	12	79	7	3
70	**KM14**	70	M70X2	92	12	85	8	3,5
75	**KM15**	75	M75X2	98	13	90	8	3,5
80	**KM16**	80	M80X2	105	15	95	8	3,5
85	**KM17**	85	M85X2	110	16	102	8	3,5
90	**KM18**	90	M90X2	120	16	108	10	4
95	**KM19**	95	M95X2	125	17	113	10	4
100	**KM20**	100	M100X2	130	18	120	10	4
105	**KM21**	105	M105X2	140	18	126	12	5
110	**KM22**	110	M110X2	145	19	133	12	5
115	**KM23**	115	M115X2	150	19	137	12	5
120	**KML24**	120	M120X2	145	20	135	12	5
120	**KM24**	120	M120X2	155	20	138	12	5
125	**KM25**	125	M125X2	160	21	148	12	5
130	**KML26**	130	M130	155	21	145	12	5
130	**KM26**	130	M130X2	165	21	149	12	5
135	**KM27**	135	M135X2	175	22	160	14	6
140	**KML28**	140	M140	165	22	155	12	5
140	**KM28**	140	M140X2	180	22	160	14	6
145	**KM29**	145	M145X2	190	24	172	14	6
150	**KML30**	150	M150	180	24	170	14	5
150	**KM30**	150	M150X2	195	24	171	14	6
155	**KM31**	155	M155X3	200	25	182	16	7
160	**KML32**	160	M160	190	25	180	14	5
160	**KM32**	160	M160X3	210	25	182	16	7
165	**KM33**	165	M165X3	210	26	193	16	7
170	**KML34**	170	M170	200	26	190	16	5
170	**KM34**	170	M170X3	220	26	193	16	7
180	**KML36**	180	M180	210	27	200	16	5
180	**KM36**	180	M180X3	230	27	203	18	8
190	**KML38**	190	M190	220	28	210	16	5
190	**KM38**	190	M190X3	240	28	214	18	8
200	**KML40**	200	M200	240	29	222	18	8
200	**KM40**	200	M200X3	250	29	226	18	8

- warehouse - order - phone

Weight [kg]	Basic makes*	Nut No.
	-	
0,004		**KM00**
0,007		**KM01**
0,010		**KM02**
0,013		**KM03**
0,019		**KM04**
0,025		**KM05**
0,043		**KM06**
0,053		**KM07**
0,085		**KM08**
0,119		**KM09**
0,148		**KM10**
0,158		**KM11**
0,174		**KM12**
0,203		**KM13**
0,242		**KM14**
0,287		**KM15**
0,397		**KM16**
0,451		**KM17**
0,556		**KM18**
0,658		**KM19**
0,698		**KM20**
0,845		**KM21**
0,965		**KM22**
1,010		**KM23**
0,780		**KML24**
1,080		**KM24**
1,190		**KM25**
0,880		**KML26**
1,250		**KM26**
1,550		**KM27**
0,990		**KML28**
1,560		**KM28**
1,800		**KM29**
1,380		**KML30**
2,030		**KM30**
2,300		**KM31**
1,560		**KML32**
2,590		**KM32**
2,700		**KM33**
1,720		**KML34**
2,800		**KM34**
1,950		**KML36**
3,070		**KM36**
2,080		**KML38**
3,390		**KM38**
2,980		**KML40**
3,690		**KM40**

* Other products also available



https://nppnovoteh.com

18. BEARING SLEEVE

18.4. Lock nuts – HM



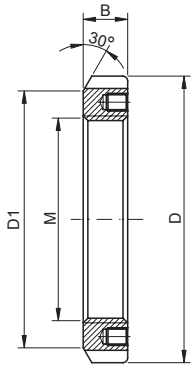

HM..

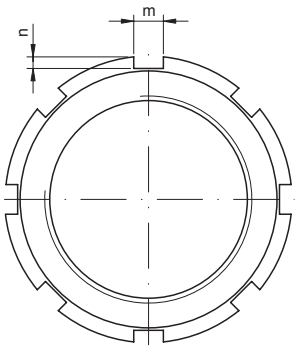

Nut No.	Dimensions [mm]						Weight [kg]
	M-thread	D	B	D1	m	n	
HM3044	TR220X4	260	30	242	20	9	3,21
HM44	TR220X4	280	32	250	20	10	5,3
HM3048	TR240X4	290	34	270	20	10	5,12
HM48	TR240X4	300	34	270	20	10	6,15
HM3052	TR260X4	310	34	290	20	10	5,54
HM52	TR260X4	330	35	300	24	12	8,05
HM3056	TR280X4	330	38	310	24	10	6,61
HM56	TR280X4	350	36	320	24	12	8,9
HM3060	TR300X4	360	42	336	24	12	9,48
HM3160	TR300X4	380	40	340	24	12	11,4
HM3064	TR320X5	380	42	356	24	12	10,1
HM3164	TR320X5	400	42	360	24	12	12,8
HM3068	TR340X5	400	45	376	24	12	11,5
HM3168	TR340X5	440	55	400	28	15	23
HM3072	TR360X5	420	45	394	28	13	11,9
HM3172	TR360X5	460	58	420	28	15	25,7
HM3076	TR380X5	450	48	422	28	14	15,9
HM3176	TR380X5	490	60	440	32	18	30
HM3080	TR400X5	470	52	442	28	14	18,2
HM3180	TR400X5	520	62	460	32	18	35,7
HM3084	TR420X5	490	52	462	32	14	18,9
HM3184	TR420X5	540	70	490	32	18	43,4
HM3088	TR440X5	520	60	490	32	15	26,5
HM3188	TR440X5	560	70	510	36	20	44,3
HM3092	TR460X5	540	60	510	32	15	27,7
HM3192	TR460X5	580	75	540	36	20	53,8
HM3096	TR480X5	560	60	530	36	15	28,7
HM3196	TR480X5	620	75	560	36	20	62,2
HM30/500	TR500X5	580	68	550	36	15	34
HM31/500	TR500X5	630	80	580	40	23	62,1
HM30/530	TR530X6	630	68	590	40	20	44,7
HM31/530	TR530X6	670	80	610	40	23	71,2
HM30/560	TR560X6	650	75	610	40	20	46,2
HM31/560	TR560X6	710	85	650	45	25	85,6
HM30/600	TR600X6	700	75	660	40	20	55,9
HM31/600	TR600X6	750	85	690	45	25	91,7
HM30/630	TR630X6	730	75	690	45	20	58,3
HM31/630	TR630X6	800	95	730	50	28	122
HM30/670	TR670X6	780	80	740	45	20	73,8
HM31/670	TR670X6	850	106	775	50	28	156
HM30/710	TR710X7	830	90	780	50	25	94,8
HM31/710	TR710X7	900	106	825	55	30	173
HM30/750	TR750X7	870	90	820	55	25	99,5
HM31/750	TR750X7	950	112	875	60	34	202
HM30/800	TR800X7	920	90	870	55	25	106
HM31/800	TR800X7	1000	112	925	60	34	215
HM30/850	TR850X7	980	90	925	60	25	113
HM31/850	TR850X7	1060	118	975	70	38	246
HM30/900	TR900X7	1030	100	975	60	25	135
HM31/900	TR900X7	1120	125	1030	70	38	293
HM30/950	TR950X8	1080	100	1025	60	25	143
HM31/950	TR950X8	1170	125	1080	70	38	310
HM30/1000	TR1000X8	1140	100	1085	60	25	165
HM31/1000	TR1000X8	1240	125	1140	70	38	361
HM30/1060	TR1060X8	1200	100	1145	60	25	175
HM31/1060	TR1060X8	1300	125	1210	70	38	386

- warehouse - order - phone

Protection with toothed or shaped washer	Basic makes*	Nut No.
	-	
MS3044		**HM3044**
MB44		**HM44**
MS3048		**HM3048**
MB48		**HM48**
MS3048		**HM3052**
MB52		**HM52**
MS3056		**HM3056**
MB56		**HM56**
MS3060		**HM3060**
MS3160		**HM3160**
MS3064		**HM3064**
MS3164		**HM3164**
MS3064		**HM3068**
MS3168		**HM3168**
MS3072		**HM3072**
MS3168		**HM3172**
MS3076		**HM3076**
MS3168		**HM3176**
MS3076		**HM3080**
MS3180		**HM3180**
MS3084		**HM3084**
MS3180		**HM3184**
MS3088		**HM3088**
MS3188		**HM3188**
MS3088		**HM3092**
MS3188		**HM3192**
MS3096		**HM3096**
MS3196		**HM3196**
MS3096		**HM30/500**
MS31/500		**HM31/500**
MS30/530		**HM30/530**
MS31/530		**HM31/530**
MS30/560		**HM30/560**
MS31/560		**HM31/560**
MS30/530		**HM30/600**
MS31/560		**HM31/600**
MS30/630		**HM30/630**
MS31/630		**HM31/630**
MS30/670		**HM30/670**
MS31/670		**HM31/670**
MS30/710		**HM30/710**
MS31/710		**HM31/710**
MS30/750		**HM30/750**
MS31/750		**HM31/750**
MS30/750		**HM30/800**
MS31/750		**HM31/800**
MS30/850		**HM30/850**
MS31/850		**HM31/850**
MS30/850		**HM30/900**
MS31/900		**HM31/900**
MS30/950		**HM30/950**
MS31/950		**HM31/950**
MS30/1000		**HM30/1000**
MS31/1000		**HM31/1000**
MS30/1000		**HM30/1060**
MS31/1000		**HM31/1060**

* Other products also available



https://nppnovoteh.com

18. BEARING SLEEVE

18.4. Lock nuts – HM



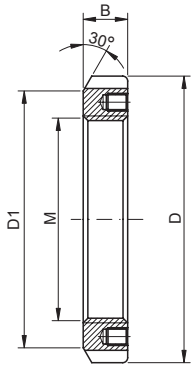

HM..

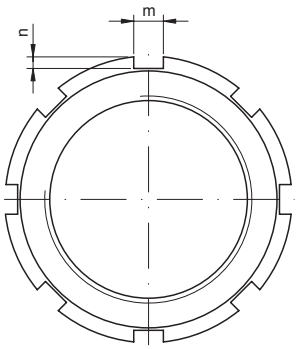

Nut No.	Dimensions [mm]						Weight [kg]
	M-thread	D	B	D1	m	n	
HM30/1120	TR1120X8	1260	100	1205	60	25	185
HM31/1120	TR1120X8	1360	125	1270	70	38	427
HM30/1180	TR1180X8	1320	100	1265	60	25	196
HM31/1180	TR1180X8	1420	125	1330	70	38	459
HM30/1250	TR1250X8	1390	110	1335	60	25	233
HM31/1250	TR1250X8	1490	125	1400	70	38	485
HM30/1320	TR320X8	1460	110	1405	60	25	245
HM31/1320	TR320X8	1560	125	1470	70	38	511
HM30/1400	TR1400X8	1540	110	1485	60	25	259
HM31/1400	TR1400X8	1640	130	1550	70	38	562
HM30/1500	TR1500X8	1650	110	1595	60	25	297
HM31/1500	TR1500X8	1740	130	1650	70	38	601

- warehouse - order - phone

Protection with toothed or shaped washer	Basic makes*	Nut No.
	-	
MS30/1000		**HM30/1120**
MS31/1000		**HM31/1120**
MS30/1000		**HM30/1180**
MS31/1000		**HM31/1180**
MS30/1000		**HM30/1250**
MS31/1000		**HM31/1250**
MS30/1000		**HM30/1320**
MS31/1000		**HM31/1320**
MS30/1000		**HM30/1400**
MS31/1000		**HM31/1400**
MS30/1000		**HM30/1500**
MS31/1000		**HM31/1500**

* Other products also available



https://nppnovoteh.com

18. BEARING SLEEVE

18.5. Lock nuts – KMT

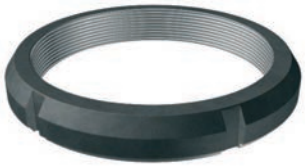

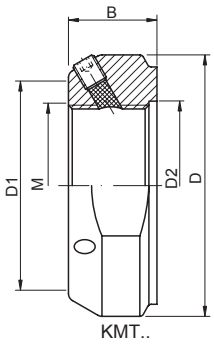

Nut No.	Dimensions [mm]									Axial static load [kN]
	M-thread	d	D	B	D1	D2	m	n	W	
KMT 0	M 10X0,75	11	28	14	23	21	4	2	24	35
KMT 1	M 12X1	13	30	14	25	23	4	2	27	40
KMT 2	M 15X1	16	33	16	28	26	4	2	30	60
KMT 3	M 17X1	18	37	18	33	29	5	2	34	80
KMT 4	M 20X1	21	40	18	35	32	5	2	36	90
KMT 5	M 25X1,5	26	44	20	39	36	5	2	41	130
KMT 6	M 30X1,5	32	49	20	44	41	5	2	46	160
KMT 7	M 35X1,5	38	54	22	49	46	5	2	50	190
KMT 8	M 40X1,5	42	65	22	59	56	6	2,5	60	210
KMT 9	M 45X1,5	48	70	22	64	61	6	2,5	65	240
KMT 10	M 50X1,5	52	75	25	68	65	7	3	70	300
KMT 11	M 55X2	58	85	25	78	74	7	3	80	340
KMT 12	M 60X2	62	90	26	82	78	8	3,5	85	380
KMT 13	M 65X2	68	95	28	87	83	8	3,5	90	460
KMT 14	M 70X2	72	100	28	92	88	8	3,5	95	490
KMT 15	M 75X2	77	105	28	97	93	8	3,5	100	520
KMT 16	M 80X2	83	110	32	100	98	8	3,5	-	620
KMT 17	M 85X2	88	120	32	110	107	10	4	-	650
KMT 18	M 90X2	93	125	32	115	112	10	4	-	680
KMT 19	M 95X2	98	130	32	120	117	10	4	-	710
KMT 20	M 100X2	103	135	32	125	122	10	4	-	740
KMT 22	M 110X2	112	145	32	134	132	10	4	-	800
KMT 24	M 120X2	122	155	32	144	142	10	4	-	860
KMT 26	M 130X2	132	165	32	154	152	12	5	-	920
KMT 28	M 140X2	142	175	32	164	162	14	6	-	980
KMT 30	M 150X2	152	185	32	174	172	14	6	-	1040
KMT 32	M 160X3	162	195	32	184	182	14	6	-	1100
KMT 34	M 170X3	172	205	32	194	192	14	6	-	1160
KMT 36	M 180X3	182	215	32	204	202	16	7	-	1220
KMT 38	M 190X3	192	225	32	214	212	16	7	-	1280
KMT 40	M 200X3	202	235	32	224	222	18	8	-	1340

- warehouse - order - phone

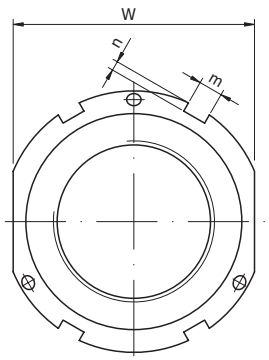

Grub screw		Weight [kg]	Fitted hook spanner or impact wrench	Basic makes*	Nut No.
Mw	Tightening moment [Nm]			-	
M5	4,5	0,045	KL/HN-2/3	◴	**KMT 0**
M5	4,5	0,050	KL/HN-3	◴	**KMT 1**
M5	4,5	0,075	KL/HN-4	◴	**KMT 2**
M6	8	0,100	KL/HN-4	◴	**KMT 3**
M6	8	0,110	KL/HN-5	◴	**KMT 4**
M6	8	0,130	KL/HN-5	◴	**KMT 5**
M6	8	0,160	KL/HN-6	◴	**KMT 6**
M6	8	0,190	KL/HN-7	◴	**KMT 7**
M6	8	0,300	KL/HN-8/9	◴	**KMT 8**
M6	8	0,330	KL/HN-9/10	◴	**KMT 9**
M6	8	0,400	KL/HN-10/11	◴	**KMT 10**
M8	18	0,540	KL/HN-12/13	◴	**KMT 11**
M8	18	0,610	KL/HN-13	◴	**KMT 12**
M8	18	0,710	KL/HN-14	◴	**KMT 13**
M8	18	0,750	KL/HN-15	◴	**KMT 14**
M8	18	0,800	KL/HN-15/16	◴	**KMT 15**
M8	18	0,900	KL/HN-16/17	◴	**KMT 16**
M10	35	1,150	KL/HN-17/18	◴	**KMT 17**
M10	35	1,200	KL/HN-18/19	◴	**KMT 18**
M10	35	1,250	KL/HN-19/20	◴	**KMT 19**
M10	35	1,300	KL/HN-20	◴	**KMT 20**
M10	35	1,450	KL/HN-22	◴	**KMT 22**
M10	35	1,600	KL/UD-909	◴	**KMT 24**
M10	35	1,700	KL/UD-909	◴	**KMT 26**
M10	35	1,800	KL/UD-909	◴	**KMT 28**
M10	35	1,950	KL/UD-909	◴	**KMT 30**
M10	35	2,100	KL/UD-910	◴	**KMT 32**
M10	35	2,200	KL/UD-910	◴	**KMT 34**
M10	35	2,300	KL/UD-910	◴	**KMT 36**
M10	35	2,400	KL/UD-910	◴	**KMT 38**
M10	35	2,500	KL/UD-910	◴	**KMT 40**

* Other products also available



https://nppnovoteh.com

18. BEARING SLEEVE

18.6. Lock nuts – KMTA

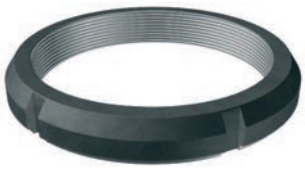

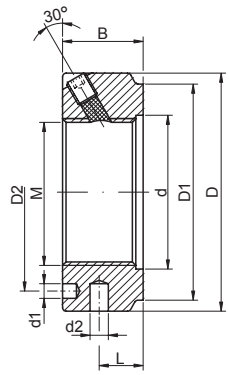

KMTA..

Nut No.	Dimensions [mm]									Axial static load [kN]
	M-thread	d	D	B	D1	D2	L	d1	d2	
KMTA 5	M 25x1,5	26	42	20	35	32,5	11	4,3	4	130
KMTA 6	M 30x1,5	32	48	20	40	40,5	11	4,3	5	160
KMTA 7	M 35x1,5	38	53	20	47	45,5	11	4,3	5	190
KMTA 8	M 40x1,5	42	58	22	52	50,5	12	4,3	5	210
KMTA 9	M 45x1,5	48	68	22	58	58	12	4,3	6	240
KMTA 10	M 50x1,5	52	70	24	63	61,5	13	4,3	6	300
KMTA 11	M 55x1,5	58	75	24	70	66,5	13	4,3	6	340
KMTA 12	M 60x1,5	62	84	24	75	74,5	13	5,3	6	380
KMTA 13	M 65x1,5	68	88	25	80	78,5	13	5,3	6	460
KMTA 14	M 70x1,5	72	95	26	86	85	14	5,3	8	490
KMTA 15	M 75x1,5	77	100	26	91	88	13	6,4	8	520
KMTA 16	M 80x2	83	110	30	97	95	16	6,4	8	620
KMTA 17	M 85x2	88	115	32	102	100	17	6,4	8	650
KMTA 18	M 90x2	93	120	32	110	108	17	6,4	8	680
KMTA 19	M 95x2	98	125	32	114	113	17	6,4	8	710
KMTA 20	M 100x2	103	130	32	120	118	17	6,4	8	740
KMTA 22	M 110x2	112	140	32	132	128	17	6,4	8	800
KMTA 24	M 120x2	122	155	32	142	140	17	6,4	8	860
KMTA 26	M 130x3	132	165	32	156	153	17	6,4	8	920
KMTA 28	M 140x3	142	180	32	166	165	17	6,4	10	980
KMTA 30	M 150x3	152	190	32	180	175	17	6,4	10	1040
KMTA 32	M 160x3	162	205	32	190	185	17	8,4	10	1100
KMTA 34	M 170x3	172	215	32	205	195	17	8,4	10	1160
KMTA 36	M 180x3	182	230	32	215	210	17	8,4	10	1220
KMTA 38	M 190x3	192	240	32	225	224	17	8,4	10	1280
KMTA 40	M 200x3	202	245	32	237	229	17	8,4	10	1340

- warehouse - order - phone

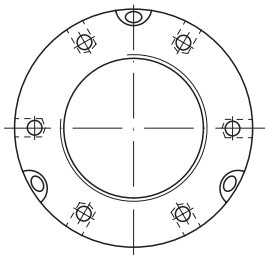

Grub screw		Weight [kg]	Fitted hook spanner of a type B	Basic makes*	Nut No.
Mw	Tightening moment [Nm]			-	
M6	8	0,130	B 40-42	◴	**KMTA 5**
M6	8	0,160	B 45-50	◴	**KMTA 6**
M6	8	0,190	B 52-55	◴	**KMTA 7**
M6	8	0,230	B 58-62	◴	**KMTA 8**
M6	8	0,330	B 68-75	◴	**KMTA 9**
M6	8	0,340	B 68-75	◴	**KMTA 10**
M6	8	0,370	B 68-75	◴	**KMTA 11**
M6	8	0,490	B 80-90	◴	**KMTA 12**
M6	8	0,520	B 80-90	◴	**KMTA 13**
M8	18	0,620	B 95-100	◴	**KMTA 14**
M8	18	0,660	B 95-100	◴	**KMTA 15**
M8	18	1,000	B 110-115	◴	**KMTA 16**
M10	35	1,150	B 110-115	◴	**KMTA 17**
M10	35	1,200	B 120-130	◴	**KMTA 18**
M10	35	1,250	B 120-130	◴	**KMTA 19**
M10	35	1,300	B 120-130	◴	**KMTA 20**
M10	35	1,450	B 135-145	◴	**KMTA 22**
M10	35	1,850	B 155-165	◴	**KMTA 24**
M10	35	2,000	B 155-165	◴	**KMTA 26**
M10	35	2,450	B 180-195	◴	**KMTA 28**
M10	35	2,600	B 180-195	◴	**KMTA 30**
M10	35	3,150	B 205-220	◴	**KMTA 32**
M10	35	3,300	B 205-220	◴	**KMTA 34**
M10	35	3,900	B 230-245	◴	**KMTA 36**
M10	35	4,100	B 230-245	◴	**KMTA 38**
M10	35	3,850	B 230-245	◴	**KMTA 40**

* Other products also available



https://nppnovoteh.com

18. BEARING SLEEVE

18.7. Lock washers – MB



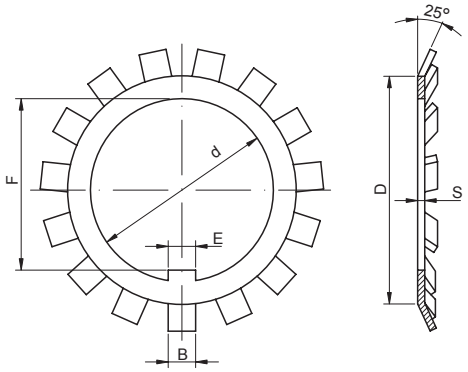

MB..

10 – 280 mm

d [mm]	Washer No.	Dimensions [mm]					
		d	D	S	E	F	B
10	**MB00**	10	13,5	1	3	8,5	3
12	**MB01**	12	17	1	3	10,5	3
15	**MB02**	15	21	1	4	13,5	4
17	**MB03**	17	24	1	4	15,5	4
20	**MB04**	20	26	1	4	18,5	4
25	**MB05**	25	32	1,25	5	23	5
30	**MB06**	30	38	1,25	5	27,5	5
35	**MB07**	35	44	1,25	6	32,5	5
40	**MB08**	40	50	1,25	6	37,5	6
45	**MB09**	45	56	1,25	6	42,5	6
50	**MB10**	50	61	1,25	6	47,5	6
55	**MB11**	55	67	1,25	8	52,5	7
60	**MB12**	60	73	1,5	8	57,5	7
65	**MB13**	65	79	1,5	8	62,5	7
70	**MB14**	70	85	1,5	8	66,5	8
75	**MB15**	75	90	1,5	8	71,5	8
80	**MB16**	80	95	1,75	10	76,5	8
85	**MB17**	85	102	1,75	10	81,5	8
90	**MB18**	90	108	1,75	10	86,5	10
95	**MB19**	95	113	1,75	10	91,5	10
100	**MB20**	100	120	1,75	12	96,5	10
105	**MB21**	105	126	1,75	12	100,5	12
110	**MB22**	110	133	1,75	12	105,5	12
115	**MB23**	115	137	2	12	110,5	12
120	**MB24**	120	138	2	14	115	12
125	**MB25**	125	148	2	14	120	12
130	**MB26**	130	149	2	14	125	12
135	**MB27**	135	160	2	14	130	14
140	**MB28**	140	160	2	16	135	14
145	**MB29**	145	172	2	16	140	14
150	**MB30**	150	171	2	16	145	14
155	**MB31**	155	182	2,5	16	147,5	16
160	**MB32**	160	182	2,5	18	154	16
165	**MB33**	165	193	2,5	18	157,5	16
170	**MB34**	170	193	2,5	18	164	16
180	**MB36**	180	203	2,5	20	174	18
190	**MB38**	190	214	2,5	20	184	18
200	**MB40**	200	226	2,5	20	194	18
220	**MB44**	220	250	3	24	213	20
240	**MB48**	240	270	3	24	233	20
260	**MB52**	260	300	3	28	253	24
280	**MB56**	280	320	3	28	273	24

- warehouse - order - phone

Weight per 100 pcs. [kg]	Basic makes*	Washer No.
	-	
0,131	●	**MB00**
0,192	●	**MB01**
0,253	●	**MB02**
0,313	●	**MB03**
0,35	●	**MB04**
0,64	●	**MB05**
0,78	●	**MB06**
1,04	●	**MB07**
1,23	●	**MB08**
1,52	●	**MB09**
1,6	●	**MB10**
1,96	●	**MB11**
2,53	●	**MB12**
2,9	●	**MB13**
3,34	●	**MB14**
3,56	●	**MB15**
4,64	●	**MB16**
5,24	●	**MB17**
6,23	●	**MB18**
6,7	●	**MB19**
7,65	●	**MB20**
8,26	●	**MB21**
9,4	●	**MB22**
10,8	●	**MB23**
10,5	●	**MB24**
11,8	●	**MB25**
11,3	●	**MB26**
14,4	●	**MB27**
14,2	●	**MB28**
16,8	●	**MB29**
15,5	●	**MB30**
20,9	●	**MB31**
22,2	●	**MB32**
24,1	●	**MB33**
24,7	●	**MB34**
26,8	●	**MB36**
27,8	●	**MB38**
29,3	●	**MB40**
40	●	**MB44**
40	●	**MB48**
60	●	**MB52**
62	●	**MB56**

* Other products also available

https://nppnovoteh.com

18. BEARING SLEEVE

18.8. Lock washers – type MS



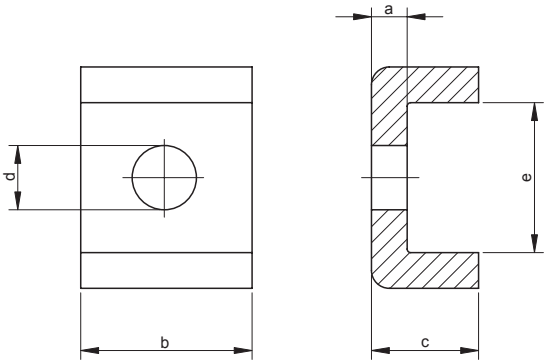

MS..

Washer No.	Dimensions [mm]					Weight [kg]	Basic makes*
	a	b	c	d	e		-
MS3044	4	20	12	7	13,5	0,026	◴
MS3048	4	20	12	9	17,5	0,035	◴
MS3052	4	20	12	9	17,5	0,039	◴
MS3056	4	24	12	9	17,5	0,040	◴
MS3060	4	24	12	9	20,5	0,043	◴
MS3064	5	24	15	9	21	0,057	◴
MS3068	5	24	15	9	21	0,060	◴
MS3072	5	28	15	9	20	0,064	◴
MS3076	5	28	15	12	24	0,076	◴
MS3080	5	28	15	12	24	0,080	◴
MS3084	5	32	15	12	24	0,085	◴
MS3088	5	32	15	14	28	0,100	◴
MS3092	5	32	15	14	28	0,104	◴
MS3096	5	36	15	14	28	0,109	◴
MS3144	4	20	12	9	22,5	0,038	◴
MS3148	4	20	12	9	22,5	0,046	◴
MS3152	4	24	12	12	25,5	0,056	◴
MS3156	4	24	12	12	25,5	0,058	◴
MS3160	4	24	12	12	30,5	0,059	◴
MS3164	5	24	15	12	31	0,074	◴
MS3168	5	28	15	14	38	0,115	◴
MS3172	5	28	15	14	38	0,115	◴
MS3176	5	32	15	14	40	0,115	◴
MS3180	5	32	15	18	45	0,154	◴
MS3184	5	32	15	18	45	0,160	◴
MS3188	5	36	15	18	43	0,163	◴
MS3192	5	36	15	18	43	0,170	◴
MS3196	5	36	15	18	53	0,177	◴
MS31/500	5	40	15	18	45	0,178	◴
MS30/530	7	40	21	18	34	0,223	◴
MS31/530	7	40	21	22	51	0,347	◴
MS30/560	7	40	21	18	29	0,212	◴
MS31/560	7	45	21	22	54	0,38	◴
MS30/630	7	45	21	18	34	0,244	◴
MS31/630	7	50	21	22	61	0,426	◴
MS30/670	7	45	21	18	39	0,257	◴
MS31/670	7	50	21	22	66	0,439	◴
MS30/710	7	50	21	18	39	0,279	◴
MS31/710	7	55	21	26	69	0,58	◴
MS30/750	7	55	21	18	39	0,301	◴
MS31/750	7	60	21	26	70	0,614	◴
MS30/850	7	60	21	22	44	0,426	◴
MS31/850	7	70	21	26	71	0,679	◴
MS31/900	7	70	21	26	76	0,698	◴
MS30/950	7	60	21	22	46	0,433	◴
MS31/950	7	70	21	26	78	0,706	◴
MS30/1000	7	60	21	22	51	0,449	◴
MS31/1000	7	70	21	26	88	0,744	◴
MS30/1500	7	60	21	22	56	0,466	◴

- warehouse ◴ - order - phone * Other products also available



https://nppnovoteh.com

19. SNAP RINGS

PIERSCIENIE OSADCZE

OUTER AND INNER SNAP RINGS



RSCIENIE OSADCZE

PIERSCIENIE OSADCZE

https://nppnovoteh.com

TABLES:

19. SNAP RINGS
19.1. Inner snap rings
19.2. Outer snap rings

INTRODUCTION:

19. Snap rings

19.1. Designations

- **SEG_Z –** outer rings, for shafts with a groove
- **SEG_W** – inner rings, for bores with a groove
- **SW** – expanding ring without fastening holes
- **SP** – snap plates for radial mounting

Behind the ring symbol rated the size of the shaft or the housing is quoted, where the ring has been mounted.

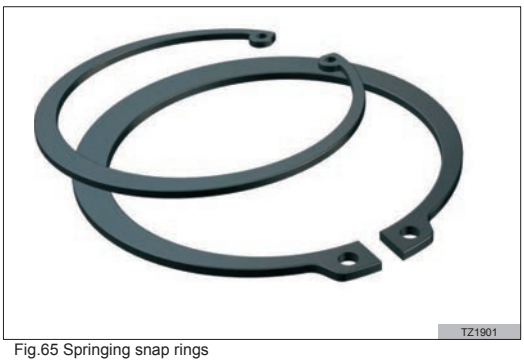

Fig.65 Springing snap rings

19.2. Basic features

Springing snap rings have diameters ranging from 5 mm to 500 mm, off-centre shape and evenly press down the surface of the groove with their whole circumference. They carry only axial load.
They are mounted and dismounted axially by means of special pliers, which use bores at rings' ends.

19.3. Expanding rings

They feature the smallest radial elasticity among all snap rings. They are mounted axially on shafts with grooves by means of pliers. They are mainly implemented for securing needle bearings. Key feature is the lack of fixing bores and centric shape (not off-centre).

19.4. Springing snap plates

They are used wherever mounting of rings in the axial direction is not possible, e.g. on account of former bearing mounting of the shaft or its length. Used with small-diameter mandrels. They feature specific shape (radial shape with three symmetrical tongues in the centre).

https://nppnovoteh.com

19. SNAP RINGS

19.1. Inner snap rings



Unassemblied inner snap ring

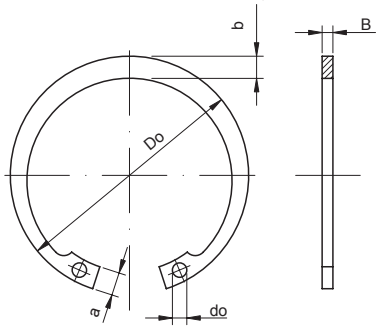

SEG W..

Inner snap ring No.	Dimensions [mm]								Weight per 1000 pcs [kg]	Basic makes*
	D	Do	Do tolerance	B	a max	b	do min	D2 max		-
SEG W 006	6	6,5	+0,36 -0,18	0,8	2,1	0,9	0,9	2,6	0,12	
SEG W 007	7	7,6	+0,36 -0,18	0,8	2,3	1	0,9	2,9	0,13	
SEG W 008	8	8,7	+0,36 -0,18	0,8	2,4	1,1	1	3,1	0,14	
SEG W 009	9	9,8	+0,36 -0,18	0,8	2,5	1,3	1	3,5	0,15	
SEG W 010	10	10,8	+0,36 -0,18	1	3,2	1,4	1,2	3,9	0,26	
SEG W 011	11	11,8	+0,36 -0,18	1	3,3	1,5	1,2	4,3	0,31	
SEG W 012	12	13	+0,36 -0,18	1	3,4	1,7	1,5	5,1	0,37	
SEG W 013	13	14,1	+0,36 -0,18	1	3,6	1,8	1,5	5,7	0,42	
SEG W 014	14	15,1	+0,36 -0,18	1	3,7	1,9	1,7	6,5	0,52	
SEG W 015	15	16,2	+0,36 -0,18	1	3,7	2	1,7	7,5	0,55	
SEG W 016	16	17,3	+0,36 -0,18	1	3,8	2	1,7	8,3	0,6	
SEG W 017	17	18,3	+0,42 -0,21	1	3,9	2,1	1,7	9,1	0,65	
SEG W 018	18	19,5	+0,42 -0,21	1	4,1	2,2	2	9,7	0,74	
SEG W 019	19	20,5	+0,42 -0,21	1	4,1	2,2	2	10,7	0,83	
SEG W 020	20	21,5	+0,42 -0,21	1	4,2	2,3	2	11,5	0,9	
SEG W 021	21	22,5	+0,42 -0,21	1	4,2	2,4	2	12,5	1	
SEG W 022	22	23,5	+0,42 -0,21	1	4,2	2,5	2	13,5	1,1	
SEG W 023	23	24,6	+0,42 -0,21	1	4,3	2,6	2	14,3	1,21	
SEG W 024	24	25,9	+0,42 -0,21	1,2	4,4	2,6	2	15,1	1,42	
SEG W 025	25	26,9	+0,42 -0,21	1,2	4,5	2,7	2	15,9	1,5	
SEG W 026	26	27,9	+0,42 -0,21	1,2	4,7	2,8	2	16,5	1,6	
SEG W 027	27	28,6	+0,42 -0,21	1,2	4,7	2,8	2,5	17,6	1,7	
SEG W 028	28	30,1	+0,42 -0,21	1,2	4,8	2,9	2,5	18,3	1,8	
SEG W 029	29	31,3	+0,42 -0,21	1,2	4,8	2,9	2,5	19,3	1,91	
SEG W 030	30	32,1	+0,50 -0,25	1,2	4,8	3	2,5	20,3	2,06	
SEG W 031	31	33,4	+0,50 -0,25	1,2	5,2	3,2	2,5	20,5	2,1	
SEG W 032	32	34,4	+0,50 -0,25	1,2	5,4	3,2	2,5	21,1	2,21	
SEG W 033	33	35,6	+0,50 -0,25	1,2	5,4	3,3	2,5	22,1	2,72	
SEG W 034	34	36,5	+0,50 -0,25	1,5	5,4	3,3	2,5	23,1	3,2	
SEG W 035	35	37,8	+0,50 -0,25	1,5	5,4	3,4	2,5	24,1	3,54	
SEG W 036	36	38,8	+0,50 -0,25	1,5	5,4	3,5	2,5	25,1	3,7	
SEG W 037	37	39,8	+0,50 -0,25	1,5	5,5	3,6	2,5	25,9	3,74	
SEG W 038	38	40,8	+0,50 -0,25	1,5	5,5	3,7	2,5	26,9	3,9	
SEG W 039	39	42,1	+0,50 -0,25	1,5	5,7	3,8	2,5	27,6	4,3	
SEG W 040	40	43,5	+0,78 -0,39	1,75	5,8	3,9	2,5	28,3	4,7	
SEG W 042	42	45,5	+0,78 -0,39	1,75	5,9	4,1	2,5	30,1	5,4	
SEG W 044	44	47,6	+0,78 -0,39	1,75	6,1	4,2	2,5	31,3	5,55	
SEG W 045	45	48,5	+0,78 -0,39	1,75	6,2	4,3	2,5	32,5	6	
SEG W 047	47	50,5	+0,92 -0,46	1,75	6,4	4,4	2,5	34,1	6,1	
SEG W 048	48	51,5	+0,92 -0,46	1,75	6,4	4,5	2,5	35,5	6,7	
SEG W 050	50	54,2	+0,92 -0,46	2	6,5	4,6	2,5	36,9	7,3	
SEG W 052	52	56,2	+0,92 -0,46	2	6,7	4,7	2,5	38,5	8,2	
SEG W 055	55	59,2	+0,92 -0,46	2	6,8	5	2,5	41,9	8,3	
SEG W 056	56	60,2	+0,92 -0,46	2	6,8	5,1	2,5	42,3	8,8	
SEG W 058	58	62,2	+0,92 -0,46	2	6,9	5,2	2,5	44,1	10,5	
SEG W 060	60	64,2	+0,92 -0,46	2	7,3	5,4	2,5	45,3	11,1	
SEG W 062	62	66,2	+0,92 -0,46	2	7,3	5,5	2,5	47,3	11,2	
SEG W 063	63	67,2	+0,92 -0,46	2	7,3	5,6	2,5	48,3	12,4	
SEG W 065	65	69,2	+0,92 -0,46	2,5	7,6	5,8	3	49,7	14,3	
SEG W 068	68	72,5	+0,92 -0,46	2,5	7,8	6,1	3	52,3	16	
SEG W 070	70	74,5	+0,92 -0,46	2,5	7,8	6,2	3	54,3	16,5	
SEG W 072	72	76,5	+0,92 -0,46	2,5	7,8	6,4	3	56,3	18,1	
SEG W 075	75	79,5	+0,92 -0,46	2,5	7,8	6,6	3	59,3	18,8	
SEG W 078	78	82,5	+1,08 -0,54	2,5	8,5	6,8	3	60,9	20,4	
SEG W 080	80	85,5	+1,08 -0,54	2,5	8,5	7	3	62,9	22	
SEG W 082	82	87,5	+1,08 -0,54	2,5	8,5	7	3	64,9	24	

- warehouse - order - phone

Groove

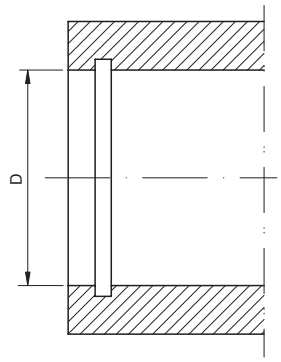

Inner snap ring assembly

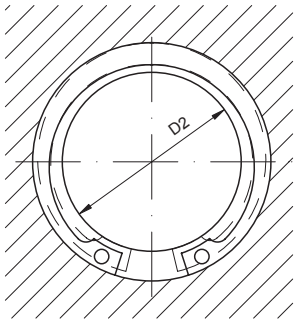

Inner snap ring No.	Dimensions [mm]								Weight per 1000 pcs [kg]	Basic makes*
	D	Do	Do tolerance	B	a max	b	do min	D2 max		-
SEG W 085	85	90,5	+1,08 -0,54	3	8,6	7,2	3,5	67,6	25,3	
SEG W 088	88	93,5	+1,08 -0,54	3	8,6	7,4	3,5	70,6	28	
SEG W 090	90	95,5	+1,08 -0,54	3	8,6	7,6	3,5	72,6	31	
SEG W 092	92	97,5	+1,08 -0,54	3	8,7	7,8	3,5	74,4	32	
SEG W 095	95	100,5	+1,08 -0,54	3	8,8	8,1	3,5	77,2	35	
SEG W 098	98	103,5	+1,08 -0,54	3	9	8,3	3,5	79,8	37	
SEG W 100	100	105,5	+1,08 -0,54	3	9	8,4	3,5	81,8	38	
SEG W 102	102	108	+1,08 -0,54	4	9,2	8,5	3,5	83,4	55	
SEG W 105	105	112	+1,08 -0,54	4	9,2	8,7	3,5	86,4	56	
SEG W 108	108	115	+1,08 -0,54	4	9,5	8,9	3,5	88,8	60	
SEG W 110	110	117	+1,08 -0,54	4	10,4	9	3,5	89	64,5	
SEG W 112	112	119	+1,08 -0,54	4	10,5	9,1	3,5	90,8	72	
SEG W 115	115	122	+1,26 -0,63	4	10,5	9,3	3,5	93,8	74,5	
SEG W 120	120	127	+1,26 -0,63	4	11	9,7	3,5	97,8	77	
SEG W 125	125	132	+1,26 -0,63	4	11	10	4	102,8	79	
SEG W 130	130	137	+1,26 -0,63	4	11	10,2	4	107,8	82	
SEG W 135	135	142	+1,26 -0,63	4	11,2	10,5	4	112,4	84	
SEG W 140	140	147	+1,26 -0,63	4	11,2	10,7	4	117,4	87,5	
SEG W 145	145	152	+1,26 -0,63	4	11,4	10,9	4	122	93	
SEG W 150	150	158	+1,26 -0,63	4	12	11,2	4	125,8	105	
SEG W 155	155	164	+1,26 -0,63	4	12	11,4	4	130,8	107	
SEG W 160	160	169	+1,26 -0,63	4	13	11,6	4	133,8	110	
SEG W 165	165	174,5	+1,26 -0,63	4	13	11,8	4	138,8	125	
SEG W 170	170	179,5	+1,26 -0,63	4	-	12,2	4	145	140	
SEG W 175	175	184,5	+1,44 -0,72	4	-	12,7	4	149	150	
SEG W 180	180	189,5	+1,44 -0,72	4	-	13,2	4	153	165	
SEG W 185	185	194,5	+1,44 -0,72	4	-	13,7	4	157	170	
SEG W 190	190	199,5	+1,44 -0,72	4	-	13,8	4	162	175	
SEG W 195	195	204,5	+1,44 -0,72	4	-	13,8	4	167	183	
SEG W 200	200	209,5	+1,44 -0,72	4	-	14	4	171	195	
SEG W 210	210	222	+1,44 -0,72	5	-	14	4	181	270	
SEG W 220	220	232	+1,44 -0,72	5	-	14	4	191	315	
SEG W 230	230	242	+1,44 -0,72	5	-	14	4	201	330	
SEG W 240	240	252	+1,62 -0,81	5	-	14	4	211	345	
SEG W 250	250	262	+1,62 -0,81	5	-	14	4	221	360	
SEG W 260	260	275	+1,62 -0,81	5	-	16	5	227	375	
SEG W 270	270	285	+1,62 -0,81	5	-	16	5	237	388	
SEG W 280	280	295	+1,62 -0,81	5	-	16	5	247	400	
SEG W 290	290	305	+1,62 -0,81	5	-	16	5	257	415	
SEG W 300	300	315	+1,62 -0,81	5	-	16	5	267	435	
SEG W 305	305	322	+1,80 -0,90	6	-	16	6	264	755	
SEG W 310	310	327	+1,80 -0,90	6	-	20	6	269	770	
SEG W 315	315	332	+1,80 -0,90	6	-	20	6	274	785	
SEG W 320	320	337	+1,80 -0,90	6	-	20	6	279	800	
SEG W 325	325	342	+1,80 -0,90	6	-	20	6	284	810	
SEG W 330	330	347	+1,80 -0,90	6	-	20	6	289	820	
SEG W 335	335	352	+1,80 -0,90	6	-	20	6	294	830	
SEG W 340	340	357	+1,80 -0,90	6	-	20	6	299	840	
SEG W 345	345	362	+1,80 -0,90	6	-	20	6	304	855	
SEG W 350	350	367	+1,80 -0,90	6	-	20	6	309	870	
SEG W 355	355	372	+1,80 -0,90	6	-	20	6	314	880	
SEG W 360	360	377	+1,80 -0,90	6	-	20	6	319	890	
SEG W 365	365	382	+1,80 -0,90	6	-	20	6	324	906	
SEG W 370	370	387	+1,80 -0,90	6	-	20	6	329	920	
SEG W 375	375	392	+1,80 -0,90	6	-	20	6	334	932	
SEG W 380	380	397	+1,80 -0,90	6	-	20	6	339	940	

* Other products also available

https://nppnovoteh.com

19. SNAP RINGS

19.1. Inner snap rings



Unassemblied inner snap ring

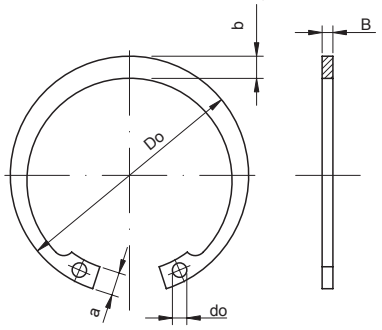

SEG W..

Inner snap ring No.	Dimensions [mm]								Weight per 1000 pcs [kg]	Basic makes*
	D	Do	Do tolerance	B	a max	b	do min	D2 max		-
SEG W 385	385	402	+2,00 -1,00	6	-	20	6	344	950	◴
SEG W 390	390	407	+2,00 -1,00	6	-	20	6	349	960	◴
SEG W 395	395	412	+2,00 -1,00	6	-	20	6	354	972	◴
SEG W 400	400	417	+2,00 -1,00	6	-	20	6	359	980	◴
SEG W 410	410	430	+2,00 -1,00	7	-	26	6	357	1380	◴
SEG W 420	420	440	+2,00 -1,00	7	-	26	6	367	1410	◴
SEG W 430	430	450	+2,00 -1,00	7	-	26	6	377	1440	◴
SEG W 440	440	460	+2,00 -1,00	7	-	26	6	387	1470	◴
SEG W 450	450	470	+2,00 -1,00	7	-	26	6	397	1510	◴
SEG W 460	460	480	+2,00 -1,00	7	-	26	6	408	1550	◴
SEG W 470	470	490	+2,00 -1,00	7	-	26	6	417	1595	◴
SEG W 480	480	500	+2,00 -1,00	7	-	26	6	427	1640	◴
SEG W 490	490	510	+3,00 -1,50	7	-	26	6	437	1685	◴
SEG W 500	500	520	+3,00 -1,50	7	-	26	6	447	1730	◴

- warehouse ◴ - order - phone * Other products also available

Groove

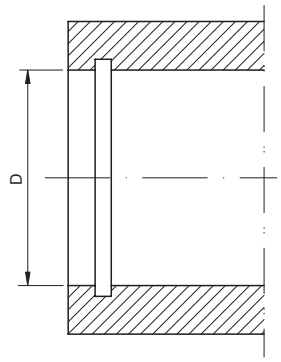

Inner snap ring assembly

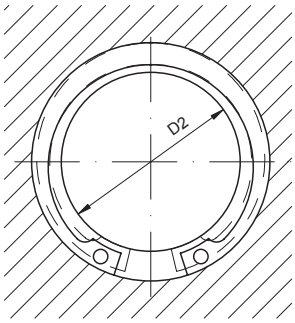



https://nppnovoteh.com

19. SNAP RINGS

19.2. Outer snap rings



Unasemblied outer snap ring

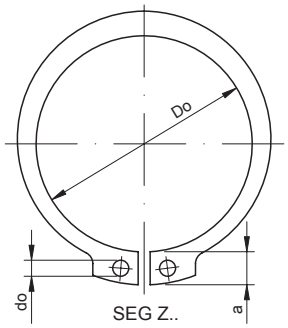

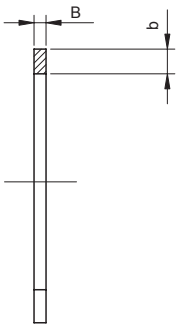

Snap Ring No.	Dimensions [mm]								Weight per 1000 pcs [kg]	Basic makes*
	D	Do	Do tolerance	B	a max	b	do	D2 max		-
SEG Z 003	3	2,7	+0,06 -0,012	0,4	1,9	0,8	0,8	6,9	0,017	
SEG Z 004	4	3,7	+0,075 -0,15	0,4	2,2	0,9	1	8,5	0,022	
SEG Z 005	5	4,7	+0,075 -0,15	0,6	2,5	1,1	1	10,1	0,066	
SEG Z 006	6	5,6	+0,075 -0,15	0,7	2,7	1,3	1,15	11,5	0,048	
SEG Z 007	7	6,5	+0,09 -0,18	0,8	3,1	1,4	1,2	13,3	0,121	
SEG Z 008	8	7,4	+0,09 -0,18	0,8	3,2	1,5	1,2	14,5	0,158	
SEG Z 009	9	8,4	+0,09 -0,18	1	3,3	1,7	1,2	15,7	0,3	
SEG Z 010	10	9,3	+0,15 -0,30	1	3,3	1,8	1,5	16,7	0,34	
SEG Z 011	11	10,2	+0,18 -0,36	1	3,3	1,8	1,5	17,7	0,41	
SEG Z 012	12	11	+0,18 -0,36	1	3,3	1,8	1,7	18,7	0,5	
SEG Z 013	13	11,9	+0,18 -0,36	1	3,4	2	1,7	19,9	0,53	
SEG Z 014	14	12,9	+0,18 -0,36	1	3,5	2,1	1,7	21,1	0,64	
SEG Z 015	15	13,8	+0,18 -0,36	1	3,6	2,2	1,7	22,3	0,67	
SEG Z 016	16	14,7	+0,18 -0,36	1	3,7	2,2	1,7	23,5	0,7	
SEG Z 017	17	15,7	+0,18 -0,36	1,2	3,8	2,3	1,7	24,7	0,82	
SEG Z 018	18	16,5	+0,18 -0,36	1,2	3,9	2,4	2	25,9	1,11	
SEG Z 019	19	17,5	+0,18 -0,36	1,2	3,9	2,5	2	26,9	1,22	
SEG Z 020	20	18,5	+0,21 -0,42	1,2	4	2,6	2	28,1	1,3	
SEG Z 021	21	19,5	+0,21 -0,42	1,2	4,1	2,7	2	29,3	1,42	
SEG Z 022	22	20,5	+0,21 -0,42	1,2	4,2	2,8	2	30,5	1,5	
SEG Z 023	23	21,5	+0,21 -0,42	1,2	4,3	2,9	2	31,7	1,58	
SEG Z 024	24	22,2	+0,21 -0,42	1,2	4,4	3	2	32,9	1,77	
SEG Z 025	25	23,2	+0,21 -0,42	1,2	4,4	3	2	33,9	1,9	
SEG Z 026	26	24,2	+0,21 -0,42	1,2	4,5	3,1	2	35,1	1,96	
SEG Z 027	27	25,2	+0,21 -0,42	1,2	4,6	3,1	2	36,3	2,02	
SEG Z 028	28	25,9	+0,21 -0,42	1,5	4,7	3,2	2	37,5	2,92	
SEG Z 029	29	26,9	+0,21 -0,42	1,5	4,8	3,4	2	38,7	3,2	
SEG Z 030	30	27,9	+0,21 -0,42	1,5	5	3,5	2	40,1	3,32	
SEG Z 031	31	28,9	+0,21 -0,42	1,5	5,1	3,6	2	41,3	3,54	
SEG Z 032	32	29,6	+0,21 -0,42	1,5	5,2	3,6	2,5	42,5	3,54	
SEG Z 033	33	30,3	+0,21 -0,42	1,5	5,3	3,7	2,5	43,6	3,7	
SEG Z 034	34	31,5	+0,25 -0,50	1,5	5,4	3,8	2,5	44,9	3,8	
SEG Z 035	35	32,2	+0,25 -0,50	1,5	5,6	3,9	2,5	46,3	4	
SEG Z 036	36	33,2	+0,25 -0,50	1,75	5,6	4	2,5	47,3	5,5	
SEG Z 037	37	34,2	+0,25 -0,50	1,75	5,7	4,1	2,5	48,3	5,58	
SEG Z 038	38	35,2	+0,25 -0,50	1,75	5,8	4,2	2,5	49,7	5,62	
SEG Z 039	39	36,2	+0,25 -0,50	1,75	5,9	4,3	2,5	51,1	5,8	
SEG Z 040	40	36,5	+0,39 -0,78	1,75	6	4,4	2,5	52,1	6,03	
SEG Z 042	42	38,5	+0,39 -0,78	1,75	6,5	4,5	2,5	55,1	6,5	
SEG Z 044	44	40,8	+0,39 -0,78	1,75	6,6	4,6	2,5	56,7	7	
SEG Z 045	45	41,5	+0,39 -0,78	1,75	6,7	4,7	2,5	58,3	7,5	
SEG Z 046	46	43,1	+0,39 -0,78	1,75	6,8	4,8	2,5	59,8	7,7	
SEG Z 048	48	44,5	+0,39 -0,78	1,75	6,9	5	2,5	61,9	7,92	
SEG Z 050	50	45,8	+0,39 -0,78	2	6,9	5,1	2,5	63,9	10,2	
SEG Z 052	52	47,8	+0,39 -0,78	2	7	5,2	2,5	66,1	11,1	
SEG Z 055	55	50,8	+0,46 -0,92	2	7,2	5,4	2,5	69,5	11,4	
SEG Z 056	56	51,8	+0,46 -0,92	2	7,3	5,5	2,5	70,7	11,8	
SEG Z 058	58	53,8	+0,46 -0,92	2	7,3	5,6	2,5	72,7	12,6	
SEG Z 060	60	55,8	+0,46 -0,92	2	7,4	5,8	2,5	74,9	12,9	
SEG Z 062	62	57,8	+0,46 -0,92	2	7,5	6	2,5	77,1	15	
SEG Z 063	63	58,8	+0,46 -0,92	2	7,6	6,2	2,5	78,3	16	
SEG Z 065	65	60,8	+0,46 -0,92	2,5	7,8	6,3	3	80,7	18,2	
SEG Z 068	68	63,5	+0,46 -0,92	2,5	8	6,5	3	84,1	21,8	
SEG Z 070	70	65,5	+0,46 -0,92	2,5	8,1	6,6	3	86,3	22	
SEG Z 072	72	67,5	+0,46 -0,92	2,5	8,2	6,8	3	88,5	22,5	
SEG Z 075	75	70,5	+0,46 -0,92	2,5	8,4	7	3	92	24,6	

- warehouse - order - phone

Shaft

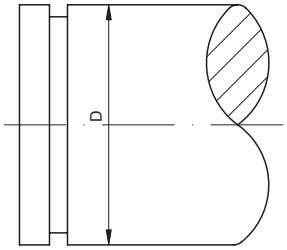

Outer snap ring assembly

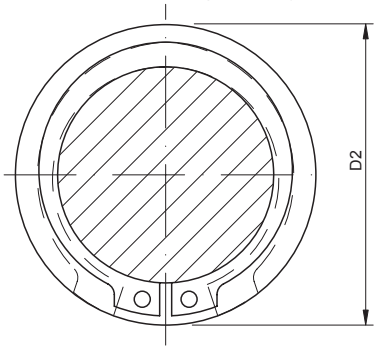

Snap Ring No.	Dimensions [mm]								Weight per 1000 pcs [kg]	Basic makes*
	D	Do	Do tolerance	B	a max	b	do	D2 max		-
SEG Z 078	78	73,5	+0,46 -0,92	2,5	8,6	7,3	3	95,4	26,2	
SEG Z 080	80	74,5	+0,46 -0,92	2,5	8,6	7,4	3	97,4	27,3	
SEG Z 082	82	76,5	+0,46 -0,92	2,5	8,7	7,5	3	99,6	31,2	
SEG Z 085	85	79,5	+0,46 -0,92	3	8,7	7,8	3,5	102,6	36,4	
SEG Z 088	88	82,5	+0,54 -1,08	3	8,8	8	3,5	105,8	41,2	
SEG Z 090	90	84,5	+0,54 -1,08	3	8,8	8,2	3,5	107,8	44,5	
SEG Z 095	95	89,5	+0,54 -1,08	3	9,4	8,6	3,5	114	49	
SEG Z 100	100	94,5	+0,54 -1,08	3	9,6	9	3,5	119,4	53,7	
SEG Z 105	105	98	+0,54 -1,08	4	9,9	9,3	3,5	125,2	80	
SEG Z 110	110	103	+0,54 -1,08	4	10,1	9,6	3,5	130,6	82	
SEG Z 115	115	108	+0,54 -1,08	4	10,6	9,8	3,5	136,6	84	
SEG Z 120	120	113	+0,54 -1,08	4	11	10,2	3,5	142,4	86	
SEG Z 125	125	118	+0,54 -1,08	4	11,4	10,4	4	148,2	90	
SEG Z 130	130	123	+0,63 -1,26	4	11,6	10,7	4	153,6	100	
SEG Z 135	135	128	+0,63 -1,26	4	11,8	11	4	159	104	
SEG Z 140	140	133	+0,63 -1,26	4	12	11,2	4	164,4	110	
SEG Z 145	145	138	+0,63 -1,26	4	12,2	11,5	4	169,8	115	
SEG Z 150	150	142	+0,63 -1,26	4	13	11,8	4	176,4	120	
SEG Z 155	155	146	+0,63 -1,26	4	13	12	4	181,4	135	
SEG Z 160	160	151	+0,63 -1,26	4	13,3	12,2	4	187	150	
SEG Z 165	165	155,5	+0,63 -1,26	4	13,5	12,5	4	192,4	160	
SEG Z 170	170	160,5	+0,63 -1,26	4	-	12,9	4	197	170	
SEG Z 175	175	165,5	+0,63 -1,26	4	-	12,9	4	202	180	
SEG Z 180	180	170,5	+0,63 -1,26	4	-	13,5	4	208	190	
SEG Z 185	185	175,5	+0,63 -1,26	4	-	13,5	4	213	200	
SEG Z 190	190	180,5	+0,72 -1,44	4	-	14	4	219	210	
SEG Z 195	195	185,5	+0,72 -1,44	4	-	14	4	224	220	
SEG Z 200	200	190,5	+0,72 -1,44	4	-	14	4	229	230	
SEG Z 210	210	198	+0,72 -1,44	5	-	14	4	239	248	
SEG Z 220	220	208	+0,72 -1,44	5	-	14	4	249	265	
SEG Z 230	230	218	+0,72 -1,44	5	-	14	4	259	290	
SEG Z 240	240	228	+0,72 -1,44	5	-	14	4	269	310	
SEG Z 250	250	238	+0,72 -1,44	5	-	14	4	279	335	
SEG Z 260	260	245	+0,72 -1,44	5	-	16	5	293	355	
SEG Z 270	270	255	+0,81 -1,62	5	-	16	5	303	375	
SEG Z 280	280	265	+0,81 -1,62	5	-	16	5	313	398	
SEG Z 290	290	275	+0,81 -1,62	5	-	16	5	323	418	
SEG Z 300	300	285	+0,81 -1,62	5	-	16	5	333	440	
SEG Z 305	305	288	+0,81 -1,62	6	-	20	6	346	738	
SEG Z 310	310	293	+0,81 -1,62	6	-	20	6	351	750	
SEG Z 315	315	298	+0,81 -1,62	6	-	20	6	356	760	
SEG Z 320	320	303	+0,81 -1,62	6	-	20	6	361	770	
SEG Z 325	325	308	+0,81 -1,62	6	-	20	6	366	787	
SEG Z 330	330	313	+0,81 -1,62	6	-	20	6	371	800	
SEG Z 335	335	318	+0,90 -1,80	6	-	20	6	376	826	
SEG Z 340	340	323	+0,90 -1,80	6	-	20	6	381	840	
SEG Z 345	345	328	+0,90 -1,80	6	-	20	6	386	845	
SEG Z 350	350	333	+0,90 -1,80	6	-	20	6	391	850	
SEG Z 355	355	338	+0,90 -1,80	6	-	20	6	396	865	
SEG Z 360	360	343	+0,90 -1,80	6	-	20	6	401	880	
SEG Z 365	365	348	+0,90 -1,80	6	-	20	6	406	885	
SEG Z 370	370	353	+0,90 -1,80	6	-	20	6	411	890	
SEG Z 375	375	358	+0,90 -1,80	6	-	20	6	416	910	
SEG Z 380	380	363	+0,90 -1,80	6	-	20	6	421	930	
SEG Z 385	385	368	+0,90 -1,80	6	-	20	6	426	940	
SEG Z 390	390	373	+0,90 -1,80	6	-	20	6	431	950	

* Other products also available

https://nppnovoteh.com

19. SNAP RINGS

19.2. Outer snap rings



Unasemblied outer snap ring

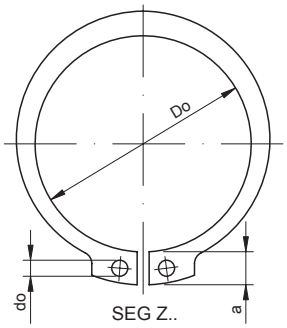

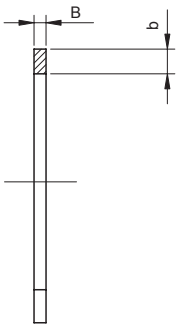

Snap Ring No.	Dimensions [mm]								Weight per 1000 pcs [kg]	Basic makes*
	D	Do	Do tolerance	B	a max	b	do	D2 max		-
SEG Z 395	395	378	+0,90 -1,80	6	-	20	6	436	990	◴
SEG Z 400	400	383	+0,90 -1,80	6	-	20	6	441	1040	◴
SEG Z 410	410	390	+0,90 -1,80	7	-	26	6	451	1320	◴
SEG Z 420	420	400	+0,90 -1,80	7	-	26	6	461	1360	◴
SEG Z 430	430	410	+1,00 -2,00	7	-	26	6	483	1390	◴
SEG Z 440	440	420	+1,00 -2,00	7	-	26	6	493	1420	◴
SEG Z 450	450	430	+1,00 -2,00	7	-	26	6	503	1450	◴
SEG Z 460	460	440	+1,00 -2,00	7	-	26	6	512	1520	◴
SEG Z 470	470	450	+1,00 -2,00	7	-	26	6	523	1590	◴
SEG Z 480	480	460	+1,00 -2,00	7	-	26	6	533	1660	◴
SEG Z 490	490	470	+1,00 -2,00	7	-	26	6	543	1725	◴
SEG Z 500	500	480	+1,00 -2,00	7	-	26	6	553	1790	◴

- warehouse ◴ - order - phone * Other products also available

https://nppnovoteh.com

Shaft

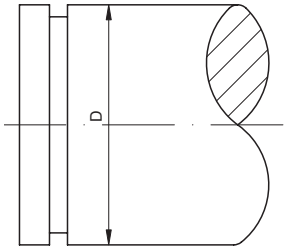

Outer snap ring assembly

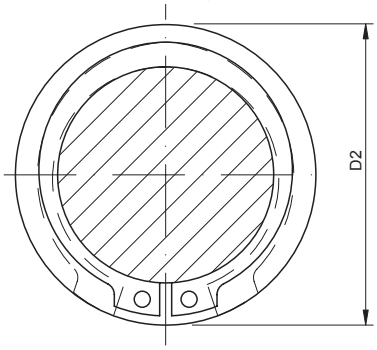



https://nppnovoteh.com

20. ROLLING ELEMENTS

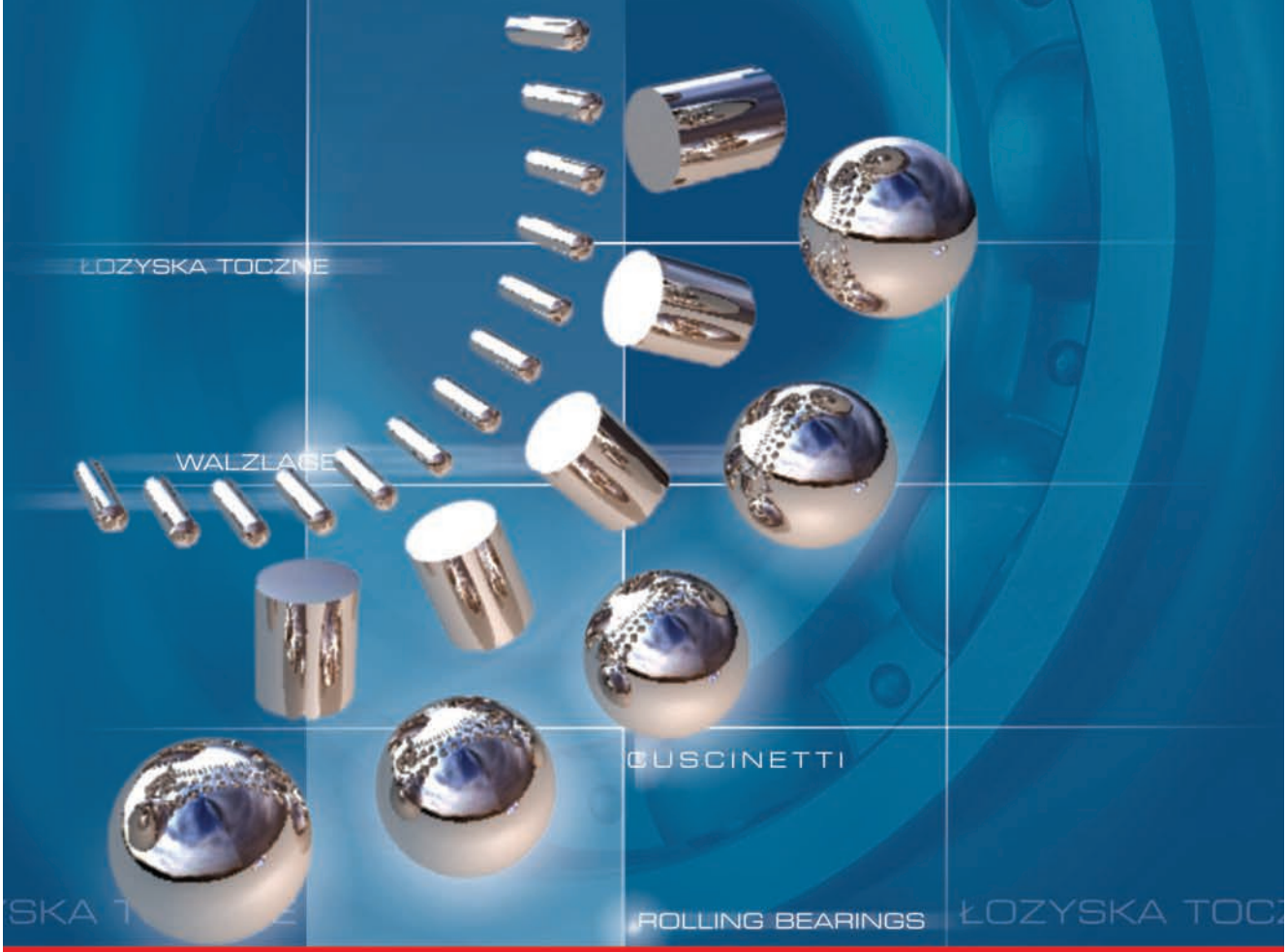

TABLES:

20. ROLLING ELEMENTS
20.1. Balls
20.2 Cylindrical rollers
20.3 Needles

INTRODUCTION:

20. Rolling elements: balls, cylindrical rollers, needles

20.1. Dimension series

- **KU^...CR...** - chromium steel balls in metric sizes
- **KU^…CS…** - carbon steel balls in metric sizes
- **KU"…CR…** - chromium steel balls in inches
- **KU"…CS…** - carbon steel balls in inches
- **RO^…** - chromium steel cylindrical rollers in metric sizes
- **IG^…** - chromium steel needles in metric sizes

20.2. Basic features

Balls, rollers and needles are standard manufactured from hardened bearing steel – CR marking. Depending on the application these rolling elements are made in various accuracy classes, with various deviations of sizes and shape. For less demanding applications the elements mentioned above are also made from carbon steel (especially balls) – CS marking. Balls are available both in metric and in inch-dimensions, whereas needles and cylindrical rollers mainly in metric sizes.

20.3. Designations

20.3.1. Balls

Terminology used below specifies rules of designation of bearing balls:

KU	**^** [mm]	size (eg. 4.)	**material (eg. CR)**	**class (eg. 28)**
KU	**"** [in]	size (eg. 1.1/4.)	**material (eg. CS)**	**class (eg. 200)**

KU – marking common to all balls
^ – symbolic representation of the metric size
“ – symbolic representation of the inch size

20.3.2. Cylindrical rollers

RO^DwXLw – where **Dw** means the diameter of the roller and **Lw** means its length in mm.

20.3.3. Needles

IG^DwXLw – where **Dw** means the diameter of the needle and **Lw** means its length in mm

Tolerances for individual accuracy can be found in the tables below.

Dimensional accuracy of hardened-steel balls

Accuracy class	Ball's rated diameter D_w		Ball accuracy in the batch		
			Scatter of ball diameter	Shape tolerance	Rated roughness
	above	up to	V_{Dws} max.	t_{Dw} max.	R_a max.
	mm		µm		
CR3	–	12	0,08	0,08	0,01
CR5	–	12	0,13	0,13	0,014
CR10	–	25	0,25	0,25	0,02
CR16	–	25	0,4	0,4	0,025
CR20	–	38	0,5	0,5	0,032
CR28	–	50	0,7	0,7	0,05
CR40	–	100	1	1	0,06
CR100 CS100	–	150	2,5	2,5	0,125
CR200 CS200	–	150	5	5	0,2
CR500 CS500	–	25	25	25	–
	25	50	25	25	–
	50	75	25	25	–
	75	100	32	32	–
	100	125	38	38	–
	125	150	44	44	–

Dimensional accuracy of hardened-steel balls

Accuracy class	Tolerance	Range and group division			
	Dispersion ball diameters in the batch	Group range			
	V_{DwL} max.	I_G ; S_T			
	μm				
CR3	0,13	0,5	-5…-0,5	0	-5…-0,5
CR5	0,25	1	-5…-1	0	+1…+5
CR10	0,5	1	-9…-1	0	+1…+9
CR16	0,8	2	-10…-2	0	+2…+10
CR20	1	2	-10…-2	0	+2…+10
CR28	1,4	2	-12…-2	0	+2…+12
CR40	2	4	-16…-4	0	+4…+16
CR100 CS100	5	10	-40…-10	0	+10…+40
CR200 CS200	10	15	-60…-15	0	+15…+60
CR500 CS500	50	50	-50	0	+50
	75	75	-75	0	+75
	100	100	-100	0	+100
	125	125	-125	0	+125
	150	150	-150	0	+150
	175	175	-175	0	+175

D_w – rated ball diameter
D_{wn} – medium ball diameter
D_{wmi} – medium diameter of balls in the batch
D_{ws} – individual diameter of the ball
I_0 – group range inside of it the permissible rated diameter deviation is evenly arranged
S_T – group tolerance
t_{Dw} – shape tolerance, spherical deviation
V_{Dwt} – spread of ball diameters in the batch, difference between the largest and the smallest D_{wm} diameter of the individual ball

Batch of balls – specified number of balls with identical rated diameters, made under the same production conditions.

Group – selective group or size group, distance from the average ball diameter in the batch to the rated diameter (D_w) rounded up to the total multiple of group's range I_G.

Dimensional accuracy of hardened-steel cylindrical rollers

Accuracy class	Roller's rated diameter D_w		Deviations from the roller's rated diameter Δ_{Dwmp}		Roughness of the rolled surface Ra
	above	up to	top	low	
	mm		μm		
1	–	26	+10,25	–16,25	0,08
2	–	26	+10,50	–16,50	0,16
	26	40	+11,25	–17,25	
3	–	40	+11,00	–17,00	0,20
	26	26	+10,50	–19,50	
4	–	26	0	–45	0,32
	26	40	0	–48	

Accuracy class	Roller's rated length L_w		Deviations of individual length Δ_{Lws}		Deviations of individual length Ra
	above	up to	top	low	
	mm		μm		
1	-	15	+2	–7	0,16
	15	26	+2,5	–7,5	
2	-	40	+3	–15	0,32
	40	65	+5	–25	
3	–	40	+10	–20	0,63
	40	100	+15	–45	
4	–	30	0	–32	
	30	100	0	–50	

D_w – rated roller diameter
Δ_{Dwmp} – deviation of the average roller diameter
L_w – rated roller's length
Δ_{Lws} – deviation of an individual roller's length

Dimensional accuracy of hardened-steel needles

Accuracy class	Deviations of needle diameter Δ_{Dwmp} [1]		Spread of averages of needle diameter V_{Dwmp} [1]	Spread of diameters in the bath V_{DwL} [1]	Roughness of rolled surface Ra
	top	low	max		
	μm				
2	0	-10	1	2	0,08
3	0	-10	1,5	3	0,16
5	0	-10	2,5	5	0,16
Tolerance of an individual length L_{ws} – h13					
[1] Values defined in the cross-section in the middle of the length L_w					

Δ_{Dwmp} – deviation of needle diameter
V_{Dwmp} – spread of needle diameter averages
V_{DwL} – spread of diameters in the batch.

https://nppnovoteh.com

https://nppnovoteh.com

20. ROLLING ELEMENTS

20.1. Balls



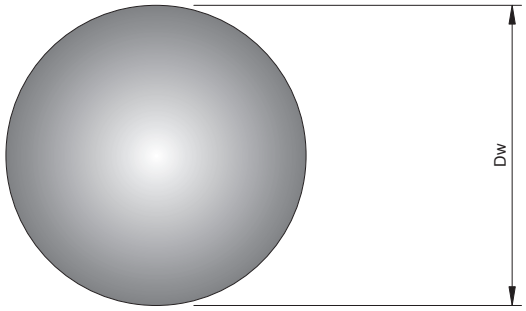

KU..

Ball No.	Diameter		Weight per 10 000 pcs [kg]	Accuracy class, material*					
	Dw [mm]	Dw [in]		CR3	CR5	CR10	CR16	CR20	CR28
KU"1/40	0,635	1/40	0,01	◴	◴	◴	◴	◴	◴
KU"1/32	0,794	1/32	0,02	◴	◴	◴	◴	◴	◴
KU^1	1	-	0,04	◴	◴	◴	◴	◴	◴
KU"3/64	1,191	3/64	0,07	◴	◴	◴	◴	◴	◴
KU"1/16	1,588	1/16	0,16	◴	◴	◴	◴	◴	◴
KU^2	2	-	0,33	◴	◴	◴	◴	◴	◴
KU"3/32	2,381	3/32	0,55	◴	◴	◴	◴	◴	◴
KU"7/64	2,778	7/64	0,88	◴	◴	◴	◴	◴	◴
KU^3	3	-	1,11	◴	◴	◴	◴	◴	◴
KU"1/8	3,175	1/8	1,32	◴	◴	◴	◴	◴	◴
KU"5/32	3,969	5/32	2,57	◴	◴	◴	◴	◴	◴
KU"3/16	4,762	3/16	4,44	◴	◴	◴	◴	◴	◴
KU^5	5	-	5,14	◴	◴	◴	◴	◴	◴
KU"7/32	5,556	7/32	7,05	◴	◴	◴	◴	◴	◴
KU^6	6	-	8,88	◴	◴	◴	◴	◴	◴
KU"1/4	6,35	1/4	10,5	◴	◴	◴	◴	◴	◴
KU"17/64	6,747	17/64	12,6	◴	◴	◴	◴	◴	◴
KU"9/32	7,144	9/32	15	◴	◴	◴	◴	◴	◴
KU"5/16	7,938	5/16	20,6	◴	◴	◴	◴	◴	◴
KU"11/32	8,731	11/32	27,4	◴	◴	◴	◴	◴	◴
KU"3/8	9,525	3/8	35,5	◴	◴	◴	◴	◴	◴
KU^10	10	-	41,1	◴	◴	◴	◴	◴	◴
KU"13/32	10,319	13/32	45,2	◴	◴	◴	◴	◴	◴
KU^10,5	10,5	-	47,6	◴	◴	◴	◴	◴	◴
KU"7/16	11,112	7/16	56,4	◴	◴	◴	◴	◴	◴
KU^11,5	11,5	-	62,5	◴	◴	◴	◴	◴	◴
KU"15/32	11,906	15/32	69,4	◴	◴	◴	◴	◴	◴
KU^12,5	12,5	-	80,3	◴	◴	◴	◴	◴	◴
KU"1/2	12,7	1/2	84,2	◴	◴	◴	◴	◴	◴
KU^13	13	-	90,3	-	◴	◴	◴	◴	◴
KU"17/32	13,494	17/32	101	-	◴	◴	◴	◴	◴
KU"9/16	14,288	9/16	120	-	-	◴	◴	◴	◴
KU"19/32	15,081	19/32	141	-	-	◴	◴	◴	◴
KU"5/8	15,875	5/8	164	-	-	◴	◴	◴	◴
KU"21/32	16,669	21/32	190	-	-	◴	◴	◴	◴
KU"11/16	17,462	11/16	219	-	-	◴	◴	◴	◴
KU"23/32	18,256	23/32	250	-	-	◴	◴	◴	◴
KU"3/4	19,05	3/4	284	-	-	◴	◴	◴	◴
KU"25/32	19,844	25/32	321	-	-	◴	◴	◴	◴
KU"13/16	20,638	13/16	360	-	-	◴	◴	◴	◴
KU"27/32	21,431	27/32	405	-	-	◴	◴	◴	◴
KU"7/8	22,225	7/8	451	-	-	◴	◴	◴	◴
KU"29/32	23,019	29/32	501	-	-	◴	◴	◴	◴
KU"15/16	23,812	15/16	555	-	-	◴	◴	◴	◴
KU"31/32	24,606	31/32	612	-	-	◴	◴	◴	◴
KU"1	25,4	1	674	-	-	◴	◴	◴	◴
KU"1.1/32	26,194	1.1/32	739	-	-	-	◴	◴	◴
KU"1.3/32	27,781	1.3/32	881	-	-	-	◴	◴	◴
KU"1.1/8	28,575	1.1/8	959	-	-	-	◴	◴	◴
KU"1.5/32	29,369	1.5/32	1040	-	-	-	◴	◴	◴
KU"1.1/16	29,988	1.1/16	808	-	-	-	◴	◴	◴
KU"1.3/16	30,162	1.3/16	1130	-	-	-	◴	◴	◴
KU"1.1/4	31,75	1.1/4	1320	-	-	-	◴	◴	◴
KU"1.5/16	33,338	1.5/16	1520	-	-	-	◴	◴	◴
KU^34	34	-	1620	-	-	-	◴	◴	◴
KU"1.3/8	34,925	1.3/8	1750	-	-	-	◴	◴	◴

- warehouse ◴ - order - phone

Accuracy class, material*							Ball No.
CR40	CR100	CS100	CR200	CS200	CR500	CS500	
-	◴	◴	◴	◴	◴	◴	**KU”1/40**
-	◴	◴	◴	◴	◴	◴	**KU”1/32**
-	◴	◴	◴	◴	◴	◴	**KU^1**
-	◴	◴	◴	◴	◴	◴	**KU”3/64**
-	◴	◴	◴	◴	◴	◴	**KU”1/16**
-	◴	◴	◴	◴	◴	◴	**KU^2**
-	◴	◴	◴	◴	◴	◴	**KU”3/32**
-	◴	◴	◴	◴	◴	◴	**KU”7/64**
-	◴	◴	◴	◴	◴	◴	**KU^3**
-	◴	◴	◴	◴	◴	◴	**KU”1/8**
-	◴	◴	◴	◴	◴	◴	**KU”5/32**
-	◴	◴	◴	◴	◴	◴	**KU”3/16**
-	◴	◴	◴	◴	◴	◴	**KU^5**
-	◴	◴	◴	◴	◴	◴	**KU”7/32**
-	◴	◴	◴	◴	◴	◴	**KU^6**
-	◴	◴	◴	◴	◴	◴	**KU”1/4**
-	◴	◴	◴	◴	◴	◴	**KU”17/64**
-	◴	◴	◴	◴	◴	◴	**KU”9/32**
-	◴	◴	◴	◴	◴	◴	**KU”5/16**
-	◴	◴	◴	◴	◴	◴	**KU”11/32**
-	◴	◴	◴	◴	◴	◴	**KU”3/8**
-	◴	◴	◴	◴	◴	◴	**KU^10**
-	◴	◴	◴	◴	◴	◴	**KU”13/32**
-	◴	◴	◴	◴	◴	◴	**KU^10,5**
-	◴	◴	◴	◴	◴	◴	**KU”7/16**
-	◴	◴	◴	◴	◴	◴	**KU^11,5**
-	◴	◴	◴	◴	◴	◴	**KU”15/32**
-	◴	◴	◴	◴	◴	◴	**KU^12,5**
-	◴	◴	◴	◴	◴	◴	**KU”1/2**
-	◴	◴	◴	◴	◴	◴	**KU^13**
-	◴	◴	◴	◴	◴	◴	**KU”17/32**
-	◴	◴	◴	◴	◴	◴	**KU”9/16**
-	◴	◴	◴	◴	◴	◴	**KU”19/32**
-	◴	◴	◴	◴	◴	◴	**KU”5/8**
-	◴	◴	◴	◴	◴	◴	**KU”21/32**
-	◴	◴	◴	◴	◴	◴	**KU”11/16**
-	◴	◴	◴	◴	◴	◴	**KU”23/32**
-	◴	◴	◴	◴	◴	◴	**KU”3/4**
-	◴	◴	◴	◴	◴	◴	**KU”25/32**
-	◴	◴	◴	◴	◴	◴	**KU”13/16**
-	◴	◴	◴	◴	◴	◴	**KU”27/32**
-	◴	◴	◴	◴	◴	◴	**KU”7/8**
-	◴	◴	◴	◴	◴	◴	**KU”29/32**
-	◴	◴	◴	◴	◴	◴	**KU”15/16**
-	◴	◴	◴	◴	◴	◴	**KU”31/32**
◴	◴	◴	◴	◴	◴	◴	**KU”1**
◴	◴	◴	◴	◴	◴	◴	**KU”1.1/32**
◴	◴	◴	◴	◴	◴	◴	**KU”1.3/32**
◴	◴	◴	◴	◴	◴	◴	**KU”1.1/8**
◴	◴	◴	◴	◴	◴	◴	**KU”1.5/32**
◴	◴	◴	◴	◴	◴	◴	**KU”1.1/16**
◴	◴	◴	◴	◴	◴	◴	**KU”1.3/16**
◴	◴	◴	◴	◴	◴	◴	**KU”1.1/4**
◴	◴	◴	◴	◴	◴	◴	**KU”1.5/16**
◴	◴	◴	◴	◴	◴	◴	**KU^34**
◴	◴	◴	◴	◴	◴	◴	**KU”1.3/8**

* Other products also available

https://nppnovoteh.com

20. ROLLING ELEMENTS

20.1. Balls



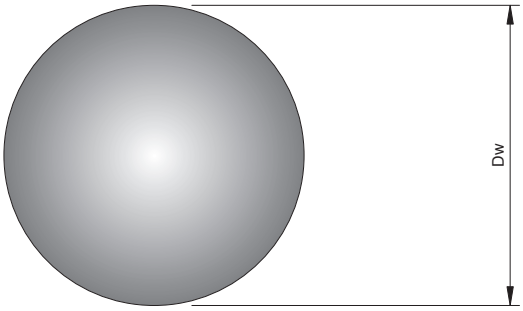

KU..

Ball No.	Diameter		Weight per 10 000 pcs [kg]	Accuracy class, material*					
	Dw [mm]	Dw [in]		CR3	CR5	CR10	CR16	CR20	CR28
KU"1.13/32	35,719	1.13/32	1870	-	-	-	🕘	🕘	🕘
KU"1.7/16	36,512	1.7/16	2000	-	-	-	🕘	🕘	🕘
KU"1.1/2	38,1	1.1/2	2270	-	-	-	🕘	🕘	🕘
KU"1.9/16	39,688	1.9/16	2570	-	-	-	-	-	-
KU"1.9/32	40,481	1.9/32	2730	-	-	-	-	-	-
KU"1.5/8	41,275	1.5/8	2890	-	-	-	-	-	-
KU"1.11/16	42,862	1.11/16	3240	-	-	-	-	-	-
KU"1.23/32	43,656	1.23/32	3420	-	-	-	-	-	-
KU"1.3/4	44,45	1.3/4	3610	-	-	-	-	-	-
KU"1.25/32	45,244	1.25/32	3810	-	-	-	-	-	-
KU"1.13/16	46,038	1.13/16	4010	-	-	-	-	-	-
KU"1.7/8	47,625	1.7/8	4440	-	-	-	-	-	-
KU"1.29/32	48,419	1.29/32	4670	-	-	-	-	-	-
KU"1.63/64	50,403	1.63/64	5260	-	-	-	-	-	-
KU"2	50,8	2	5390	-	-	-	-	-	-
KU^51,5	51,5	-	5610	-	-	-	-	-	-
KU^52,5	52,5	-	5950	-	-	-	-	-	-
KU"2.1/8	53,975	2.1/8	6460	-	-	-	-	-	-
KU^55	55	-	6840	-	-	-	-	-	-
KU"2.3/16	55,562	2.3/16	7050	-	-	-	-	-	-
KU"2.7/32	56,356	2.7/32	7360	-	-	-	-	-	-
KU"2.1/4	57,15	2.1/4	7670	-	-	-	-	-	-
KU^59	59	-	8440	-	-	-	-	-	-
KU"2.3/8	60,325	2.3/8	9020	-	-	-	-	-	-
KU^62	62	-	9800	-	-	-	-	-	-
KU"2.1/2	63,5	2.1/2	10500	-	-	-	-	-	-
KU"2.5/8	66,675	2.5/8	12200	-	-	-	-	-	-
KU"2.3/4	69,85	2.3/4	14000	-	-	-	-	-	-
KU"2.7/8	73,025	2.7/8	16000	-	-	-	-	-	-
KU"3	76,2	3	18200	-	-	-	-	-	-
KU^80	80	-	21000	-	-	-	-	-	-
KU"3.1/4	82,55	3.1/4	23100	-	-	-	-	-	-
KU"3.1/2	88,9	3.1/2	28900	-	-	-	-	-	-
KU^92	92	-	32000	-	-	-	-	-	-
KU"3.3/4	95,25	3.3/4	35500	-	-	-	-	-	-
KU"3.7/8	98,425	3.7/8	39200	-	-	-	-	-	-
KU"4	101,6	4	43100	-	-	-	-	-	-
KU^105	105	-	47600	-	-	-	-	-	-
KU"4.1/4	107,95	4.1/4	51700	-	-	-	-	-	-
KU^110	110	-	54700	-	-	-	-	-	-
KU"4.1/2	114,3	4.1/2	61400	-	-	-	-	-	-
KU^120	120	-	71000	-	-	-	-	-	-
KU^125	125	-	80300	-	-	-	-	-	-
KU"5	127	5	84200	-	-	-	-	-	-
KU^130	130	-	90300	-	-	-	-	-	-
KU^135	135	-	101000	-	-	-	-	-	-
KU^140	140	-	113000	-	-	-	-	-	-
KU^145	145	-	125000	-	-	-	-	-	-
KU^150	150	-	139000	-	-	-	-	-	-
KU^155	155	-	153000	-	-	-	-	-	-
KU^160	160	-	168000	-	-	-	-	-	-
KU^165	165	-	185000	-	-	-	-	-	-
KU^170	170	-	202000	-	-	-	-	-	-
KU^175	175	-	220000	-	-	-	-	-	-
KU^190	190	-	282000	-	-	-	-	-	-
KU^195	195	-	305000	-	-	-	-	-	-
KU^200	200	-	329000	-	-	-	-	-	-
KU^220	220	-	438000	-	-	-	-	-	-

🏠- warehouse 🕘 - order 📞 - phone

Accuracy class, material*							Ball No.
CR40	CR100	CS100	CR200	CS200	CR500	CS500	
◴	◴	◴	◴	◴	◴	◴	**KU”1.13/32**
◴	◴	◴	◴	◴	◴	◴	**KU”1.7/16**
◴	◴	◴	◴	◴	◴	◴	**KU”1.1/2**
-	◴	◴	◴	◴	◴	◴	**KU”1.9/16**
-	◴	◴	◴	◴	◴	◴	**KU”1.9/32**
-	◴	◴	◴	◴	◴	◴	**KU”1.5/8**
-	◴	◴	◴	◴	◴	◴	**KU”1.11/16**
-	◴	◴	◴	◴	◴	◴	**KU”1.23/32**
-	◴	◴	◴	◴	◴	◴	**KU”1.3/4**
-	◴	◴	◴	◴	◴	◴	**KU”1.25/32**
-	◴	◴	◴	◴	◴	◴	**KU”1.13/16**
-	◴	◴	◴	◴	◴	◴	**KU”1.7/8**
-	◴	◴	◴	◴	◴	◴	**KU”1.29/32**
-	◴	◴	◴	◴	◴	◴	**KU”1.63/64**
-	◴	◴	◴	◴	◴	◴	**KU”2**
-	◴	◴	◴	◴	◴	◴	**KU^51,5**
-	◴	◴	◴	◴	◴	◴	**KU^52,5**
-	◴	◴	◴	◴	◴	◴	**KU”2.1/8**
-	◴	◴	◴	◴	◴	◴	**KU^55**
-	◴	◴	◴	◴	◴	◴	**KU”2.3/16**
-	◴	◴	◴	◴	◴	◴	**KU”2.7/32**
-	◴	◴	◴	◴	◴	◴	**KU”2.1/4**
-	◴	◴	◴	◴	◴	◴	**KU^59**
-	◴	◴	◴	◴	◴	◴	**KU”2.3/8**
-	◴	◴	◴	◴	◴	◴	**KU^62**
-	◴	◴	◴	◴	◴	◴	**KU”2.1/2**
-	◴	◴	◴	◴	◴	◴	**KU”2.5/8**
-	◴	◴	◴	◴	◴	◴	**KU”2.3/4**
-	◴	◴	◴	◴	◴	◴	**KU”2.7/8**
-	◴	◴	◴	◴	◴	◴	**KU”3**
-	◴	◴	◴	◴	◴	◴	**KU^80**
-	◴	◴	◴	◴	◴	◴	**KU”3.1/4**
-	◴	◴	◴	◴	◴	◴	**KU”3.1/2**
-	◴	◴	◴	◴	◴	◴	**KU^92**
-	◴	◴	◴	◴	◴	◴	**KU”3.3/4**
-	◴	◴	◴	◴	◴	◴	**KU”3.7/8**
-	◴	◴	◴	◴	◴	◴	**KU”4**
-	◴	◴	◴	◴	◴	◴	**KU^105**
-	◴	◴	◴	◴	◴	◴	**KU”4.1/4**
-	◴	◴	◴	◴	◴	◴	**KU^110**
-	◴	◴	◴	◴	◴	◴	**KU”4.1/2**
-	◴	◴	◴	◴	◴	◴	**KU^120**
-	◴	◴	◴	◴	◴	◴	**KU^125**
-	◴	◴	◴	◴	◴	◴	**KU”5**
-	◴	◴	◴	◴	◴	◴	**KU^130**
-	◴	◴	◴	◴	◴	◴	**KU^135**
-	◴	◴	◴	◴	◴	◴	**KU^140**
-	◴	◴	◴	◴	◴	◴	**KU^145**
-	◴	◴	◴	◴	◴	◴	**KU^150**
-	-	◴	-	◴	◴	◴	**KU^155**
-	-	◴	-	◴	◴	◴	**KU^160**
-	-	◴	-	◴	◴	◴	**KU^165**
-	-	◴	-	◴	◴	◴	**KU^170**
-	-	◴	-	◴	◴	◴	**KU^175**
-	-	◴	-	◴	◴	◴	**KU^190**
-	-	◴	-	◴	◴	◴	**KU^195**
-	-	◴	-	◴	◴	◴	**KU^200**
-	-	◴	-	◴	◴	◴	**KU^220**

* Other products also available



20. ROLLING ELEMENTS

20.2. Cylindrical rollers



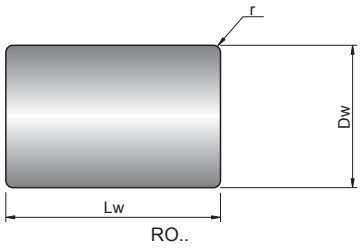

Roller No.	Dimensions [mm]			Weight per 10 000 pcs [kg]	Basic makes*
	Dw	Lw	r		-
RO^5X5	5	5	0,4	7,7	
RO^5X8	5	8	0,4	12,3	
RO^5X10	5	10	0,4	15,4	
RO^5,5X5,5	5,5	5,5	0,4	10,3	
RO^5,5X6	5,5	6	0,4	11,2	
RO^5,5X8	5,5	8	0,4	14,9	
RO^5,5X9	5,5	9	0,4	20	
RO^6X6	6	6	0,4	13,3	
RO^6X8	6	8	0,4	17,8	
RO^6X10	6	10	0,4	22,2	
RO^6X12	6	12	0,4	26,6	
RO^6,5X6,5	6,5	6,5	0,4	16,9	
RO^6,5X7	6,5	7	0,4	18,2	
RO^6,5X9	6,5	9	0,4	23,4	
RO^6,5X10	6,5	10	0,4	26	
RO^7X7	7	7	0,4	21,1	
RO^7X10	7	10	0,4	30,2	
RO^7X14	7	14	0,4	42,3	
RO^7,5X7,5	7,5	7,5	0,4	26	
RO^7,5X9	7,5	9	0,4	31,2	
RO^7,5X11	7,5	11	0,4	38,1	
RO^8X8	8	8	0,4	31,6	
RO^8X9	8	9	0,4	35,5	
RO^8X12	8	12	0,4	47,4	
RO^9X9	9	9	0,5	44,9	
RO^9X10	9	10	0,5	49,9	
RO^9X13	9	13	0,5	60	
RO^9X14	9	14	0,5	69,9	
RO^10X10	10	10	0,5	60	
RO^10X11	10	11	0,5	67,8	
RO^10X14	10	14	0,5	86,3	
RO^10X16	10	16	0,5	98,6	
RO^11X11	11	11	0,5	82,1	
RO^11X12	11	12	0,5	89,5	
RO^11X15	11	15	0,5	112	
RO^11X18	11	18	0,5	134	
RO^12X12	12	12	0,5	107	
RO^12X14	12	14	0,5	124	
RO^12X17	12	17	0,5	151	
RO^12X18	12	18	0,5	160	
RO^12X21	12	21	0,5	186	
RO^13X13	13	13	0,6	135	
RO^13X18	13	18	0,6	190	
RO^13X20	13	20	0,6	208	
RO^14X14	14	14	0,6	170	
RO^14X15	14	15	0,6	181	
RO^14X20	14	20	0,6	240	
RO^14X22	14	22	0,6	266	
RO^15X15	15	15	0,6	208	
RO^15X16	15	16	0,6	222	
RO^15X17	15	17	0,6	236	
RO^15X22	15	22	0,6	305	
RO^15X24	15	24	0,6	333	
RO^16X16	16	16	0,6	250	
RO^16X17	16	17	0,6	270	
RO^16X24	16	24	0,6	380	

- warehouse - order - phone

Roller No.	Dimensions [mm]			Weight per 10 000 pcs [kg]	Basic makes*
	Dw	Lw	r		-
RO^16X27	16	27	0,6	430	◴
RO^17X17	17	17	0,7	300	◴
RO^17X24	17	24	0,7	430	◴
RO^18X18	18	18	0,7	360	◴
RO^18X19	18	19	0,7	380	◴
RO^18X26	18	26	0,7	520	◴
RO^18X30	18	30	0,7	600	◴
RO^19X19	19	19	0,7	420	◴
RO^19X20	19	20	0,7	450	◴
RO^19X28	19	28	0,7	620	◴
RO^19X32	19	32	0,7	710	◴
RO^20X20	20	20	0,7	490	◴
RO^20X35	20	35	0,7	860	◴
RO^20X40	20	40	0,7	990	◴
RO^21X21	21	21	0,8	570	◴
RO^21X22	21	22	0,8	600	◴
RO^21X30	21	30	0,8	820	◴
RO^21X32	21	32	0,8	870	◴
RO^22X22	22	22	0,8	660	◴
RO^22X24	22	24	0,8	720	◴
RO^22X34	22	34	0,8	1010	◴
RO^23X23	23	23	0,8	750	◴
RO^23X24	23	24	0,8	780	◴
RO^23X32	23	32	0,8	1040	◴
RO^23X34	23	34	0,8	1110	◴
RO^23X36	23	36	0,8	1170	◴
RO^24X24	24	24	0,8	850	◴
RO^24X26	24	26	0,8	920	◴
RO^24X36	24	36	0,8	1280	◴
RO^24X38	24	38	0,8	1350	◴
RO^25X25	25	25	0,8	960	◴
RO^25X27	25	27	0,8	1040	◴
RO^25X30	25	30	0,8	1160	◴
RO^25X36	25	36	0,8	1390	◴
RO^25X40	25	40	0,8	1540	◴
RO^25X52	25	52	0,8	2000	◴
RO^26X26	26	26	0,8	1080	◴
RO^26X28	26	28	0,8	1170	◴
RO^26X40	26	40	0,8	1670	◴
RO^27X48	27	48	1	2150	◴
RO^28X28	28	28	1	1350	◴
RO^28X30	28	30	1	1440	◴
RO^28X40	28	40	1	1930	◴
RO^28X44	28	44	1	2120	◴
RO^30X30	30	30	1	1660	◴
RO^30X34	30	34	1	1880	◴
RO^30X48	30	48	1	2660	◴
RO^30X64	30	64	1	3540	◴
RO^32X32	32	32	1	2010	◴
RO^32X40	32	40	1	2520	◴
RO^32X52	32	52	1	3280	◴
RO^34X34	34	34	1	2410	◴
RO^34X55	34	55	1	3910	◴
RO^34X75	34	75	1	5340	◴
RO^36X36	36	36	1,2	2860	◴
RO^36X58	36	58	1,2	4620	◴

* Other products also available



20. ROLLING ELEMENTS

20.2. Cylindrical rollers



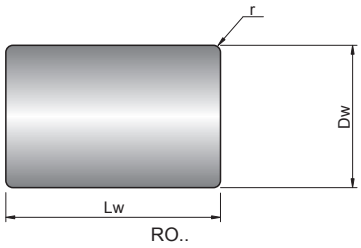

Roller No.	Dimensions [mm]			Weight per 10 000 pcs [kg]	Basic makes*
	Dw	Lw	r		-
RO^38X38	38	38	1,2	3370	
RO^38X42	38	42	1,2	3730	
RO^38X60	38	60	1,2	5330	
RO^38X62	38	62	1,2	5510	
RO^40X40	40	40	1,2	3930	
RO^40X65	40	65	1,2	6400	
RO^40X70	40	70	1,2	6890	
RO^40X87	40	87	1,2	8570	
RO^42X42	42	42	1,2	4550	
RO^42X70	42	70	1,2	7590	
RO^42X75	42	75	1,2	8140	
RO^42X80	42	80	1,2	8680	
RO^42X82	42	82	1,2	8900	
RO^42X84	42	84	1,2	9120	
RO^45X45	45	45	1,5	5600	
RO^45X65	45	65	1,5	8100	
RO^45X70	45	70	1,5	8720	
RO^45X75	45	75	1,5	9340	
RO^45X98	45	98	1,5	12200	
RO^48X48	48	48	1,5	6800	
RO^48X65	48	65	1,5	9210	
RO^48X75	48	75	1,5	10600	
RO^48X80	48	80	1,5	11300	
RO^50X50	50	50	1,5	7690	
RO^50X75	50	75	1,5	11500	
RO^50X85	50	85	1,5	13100	
RO^50X88	50	88	1,5	13600	
RO^50X100	50	100	1,5	15400	
RO^50X110	50	110	1,5	16900	
RO^52X52	52	52	1,5	8650	
RO^52X90	52	90	1,5	15000	
RO^54X54	54	54	1,5	9680	
RO^54X80	54	80	1,5	14400	
RO^54X85	54	85	1,5	15300	
RO^54X90	54	90	1,5	16100	
RO^54X95	54	95	1,5	17000	
RO^54X120	54	120	1,5	21500	
RO^56X56	56	56	1,5	10800	
RO^56X70	56	70	1,5	13500	
RO^56X90	56	90	1,5	17400	
RO^56X112	56	112	1,5	21600	
RO^58X100	58	100	1,8	20700	
RO^60X60	60	60	1,8	13300	
RO^60X90	60	90	1,8	19900	
RO^60X95	60	95	1,8	21100	
RO^60X100	60	100	1,8	22200	
RO^62X62	62	62	1,8	14700	
RO^62X80	62	80	1,8	18900	
RO^64X64	64	64	1,8	16100	
RO^64X70	64	70	1,8	17700	
RO^64X75	64	75	1,8	18900	
RO^64X100	64	100	1,8	25300	
RO^64X105	64	105	1,8	26500	
RO^64X128	64	128	1,8	32300	
RO^64X135	64	135	1,8	34100	
RO^68X68	68	68	2	19300	

- warehouse - order - phone

Roller No.	Dimensions [mm]			Weight per 10 000 pcs [kg]	Basic makes*
	Dw	Lw	r		-
RO^68X75	68	75	2	21300	◴
RO^68X110	68	110	2	31300	◴
RO^70X70	70	70	2	21100	◴
RO^70X110	70	110	2	33200	◴
RO^72X100	72	100	2	32000	◴
RO^75X75	75	75	2	26000	◴
RO^75X80	75	80	2	27700	◴
RO^75X110	75	110	2	38100	◴
RO^75X115	75	115	2	39800	◴
RO^75X120	75	120	2	41600	◴
RO^75X125	75	125	2	43300	◴
RO^75X155	75	155	2	53700	◴
RO^80X80	80	80	2,5	31500	◴
RO^80X85	80	85	2,5	33500	◴
RO^80X90	80	90	2,5	35500	◴
RO^80X115	80	115	2,5	45300	◴
RO^80X120	80	120	2,5	47300	◴
RO^80X130	80	130	2,5	51300	◴
RO^80X160	80	160	2,5	63100	◴



* Other products also available

20. ROLLING ELEMENTS

20.3. Needles



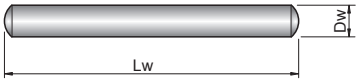

IG..

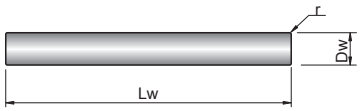

Needle No.	Dimensions [mm]				Weight per 10 000 pcs [kg]	Basic makes*
	Dw	Lw	r min	r max		-
IG^1,5X5,8	1,5	5,8	0,1	0,4	0,8	◴
IG^1,5X7,8	1,5	7,8	0,1	0,4	1,1	◴
IG^1,5X9,8	1,5	9,8	0,1	0,4	1,3	◴
IG^1,5X11,8	1,5	11,8	0,1	0,4	1,6	◴
IG^1,5X13,8	1,5	13,8	0,1	0,4	1,8	◴
IG^2X7,8	2	7,8	0,1	0,4	1,9	◴
IG^2X9,8	2	9,8	0,1	0,4	2,4	◴
IG^2X11,8	2	11,8	0,1	0,4	2,9	◴
IG^2X13,8	2	13,8	0,1	0,4	3,4	◴
IG^2X15,8	2	15,8	0,1	0,4	3,9	◴
IG^2X17,8	2	17,8	0,1	0,4	4,4	◴
IG^2X19,8	2	19,8	0,1	0,4	4,9	◴
IG^2X21,8	2	21,8	0,1	0,4	5,4	◴
IG^2,5X7,8	2,5	7,8	0,1	0,4	3	◴
IG^2,5X9,8	2,5	9,8	0,1	0,4	3,8	◴
IG^2,5X11,8	2,5	11,8	0,1	0,4	4,5	◴
IG^2,5X13,8	2,5	13,8	0,1	0,4	5,3	◴
IG^2,5X15,8	2,5	15,8	0,1	0,4	6,1	◴
IG^2,5X17,8	2,5	17,8	0,1	0,4	6,9	◴
IG^2,5X19,8	2,5	19,8	0,1	0,4	7,6	◴
IG^2,5X21,8	2,5	21,8	0,1	0,4	8,4	◴
IG^2,5X23,8	2,5	23,8	0,1	0,4	9,2	◴
IG^3X9,8	3	9,8	0,1	0,4	5,4	◴
IG^3X11,8	3	11,8	0,1	0,4	6,5	◴
IG^3X13,8	3	13,8	0,1	0,4	7,6	◴
IG^3X15,8	3	15,8	0,1	0,4	8,7	◴
IG^3X17,8	3	17,8	0,1	0,4	9,9	◴
IG^3X19,8	3	19,8	0,1	0,4	11	◴
IG^3X21,8	3	21,8	0,1	0,4	12,2	◴
IG^3X23,8	3	23,8	0,1	0,4	13,2	◴
IG^3X27,8	3	27,8	0,1	0,4	15,4	◴
IG^3,5X29,8	3,5	29,8	0,1	0,6	22,5	◴
IG^3,5X34,8	3,5	34,8	0,1	0,6	26,5	◴
IG^4X39,8	4	39,8	0,1	0,6	39	◴
IG^5X49,8	5	49,8	0,1	0,6	75	◴

- warehouse ◴ - order - phone * Other products also available



https://nppnovoteh.com

21. SPECIAL BEARINGS



21.1 SPECIAL BEARINGS



Cardan joint



Water pump bearing

Bearing No.	Equivalent	Dimensions [mm]				Basic makes*	Bearing type
		d	D	B	L	-	
Ball bearings							
SB.BA0315.	PLC81-4	3	15,00	4	-		Ball bearings
SB.BA0523.	PLC02-10	5	23,00	5	-		Ball bearings
SB.BA0525.	PLC02-6	5	25,00	5	-		Ball bearings
SB.BA0519.	-	5	19	-	-		Ball bearings
SB.BA0619.1	PLC11-2	6	19,00	10	-		Ball bearings
SB.BA0619.2	PLC11-3	6	19,00	14	-		Ball bearings
SB.BA0724.	-	7	24	-	-		Ball bearings
SB.BA0722.	CBK501	7,01	22,00	7,01	-		Ball bearings
SB.BA0822.1	PLC01-16	8	22,00	7	-		Ball bearings
SB.BA0822.2	PLC11-4	8	22,00	14	-		Ball bearings
SB.BA0822.3	PLC73-1-15	8	22,00	85	-		Ball bearings
SB.BA0822.4	PLC73-1-4	8	22,00	85	-		Ball bearings
SB.BA0822.5	PLC73-1-5	8	22,00	85	-		Ball bearings
SB.BA0822/12.	-	8	22,00	-	-		Ball bearings
SB.BA0826.	PLC12-2	8	26,00	18	-		Ball bearings
SB.BA0828.	PLC02-12	8	28,00	10,1	-		Ball bearings
SB.BA0812/12.	-	8	12	-	-		Ball bearings
SB.BA0822.	-	8	22	-	-		Ball bearings
SB.BA0824.	-	8	24	-	-		Ball bearings
SB.BA08,121.12	PLC72-2-4	8,1	20,98	90	-		Ball bearings
SB.BA08,121.5	PLC72-2-12	8,1	20,98	99	-		Ball bearings
SB.BA08,121.8	PLC72-2-16	8,1	20,98	105	-		Ball bearings
SB.BA08,121.1	PLC72-2	8,1	20,98	105,5	-		Ball bearings
SB.BA08,121.11	PLC72-2-19	8,1	20,98	105,5	-		Ball bearings
SB.BA08,121.13	PLC72-2-8	8,1	20,98	105,5	-		Ball bearings
SB.BA08,121.14	PLC72-2-9	8,1	20,98	105,5	-		Ball bearings
SB.BA08,121.6	PLC72-2-14	8,1	20,98	117	-		Ball bearings
SB.BA08,121.7	PLC72-2-15	8,1	20,98	119,5	-		Ball bearings
SB.BA08,121.2	PLC72-2-1	8,1	20,98	122	-		Ball bearings
SB.BA08,121.10	PLC72-2-18	8,1	20,98	126,5	-		Ball bearings
SB.BA08,121.3	PLC72-2-10	8,1	20,98	132,4	-		Ball bearings
SB.BA08,121.4	PLC72-2-11	8,1	20,98	132,4	-		Ball bearings
SB.BA08,121.9	PLC72-2-17	8,1	20,98	137	-		Ball bearings
SB.BA08,140.	CBK493	8,1	40,00	12	-		Ball bearings
SB.BA0932.	-	9	32	-	-		Ball bearings
SB.BA1022.10	PLC73-4	10	22,00	70	-		Ball bearings
SB.BA1022.1	PLC73-1-12	10	22,00	81	-		Ball bearings
SB.BA1022.2	PLC73-1-13	10	22,00	92	-		Ball bearings
SB.BA1022.9	PLC73-1-8	10	22,00	92	-		Ball bearings
SB.BA1022.3	PLC73-1-14	10	22,00	112	-		Ball bearings
SB.BA1022.4	PLC73-1-20	10	22,00	112	-		Ball bearings
SB.BA1022.5	PLC73-1-22	10	22,00	112	-		Ball bearings
SB.BA1022.6	PLC73-1-24	10	22,00	112	-		Ball bearings
SB.BA1022.7	PLC73-1-27	10	22,00	112	-		Ball bearings
SB.BA1022.8	PLC73-1-31	10	22,00	112	-		Ball bearings
SB.BA1026.	CBK498	10	26,00	8	-		Ball bearings
SB.BA1030.3	XN028	10	30,00	12	-		Ball bearings
SB.BA1030.4	XN029	10	30,00	12	-		Ball bearings
SB.BA1030.1	PLC02-2	10	30,00	15	-		Ball bearings
SB.BA1030.2	PLC12-3	10	30,00	20	-		Ball bearings
SB.BA1032.	-	10	32	-	-		Ball bearings
SB.BA1225.1	PLC74-3	12	25,00	92	-		Ball bearings
SB.BA1225.2	PLC74-5	12	25,00	92	-		Ball bearings
SB.BA1225.3	PLC74-5-2	12	25,00	92	-		Ball bearings
SB.BA1232.1	CBK520	12	32,00	10	-		Ball bearings
SB.BA123201.	CBK499	12	32,00	10	-		Ball bearings

- warehouse - order - phone * Other products also available

https://nppnovoteh.com

21.1 SPECIAL BEARINGS



Cardan joint



Water pump bearing

Bearing No.	Equivalent	Dimensions [mm]				Basic makes*	Bearing type
		d	D	B	L	-	
SB.BA123201.	CBK499	12	32,00	10	-		Ball bearings
SB.BA123202.	CBK473	12	32,00	10	-		Ball bearings
SB.BA1232.2	PLC13-3	12	32,00	24	-		Ball bearings
SB.BA1235.	XN090	12	35,00	10	-		Ball bearings
SB.BA1237.	XN021	12	37,00	12	-		Ball bearings
SB.BA123702.	CBK228	12	37,00	17	-		Ball bearings
SB.BA1238.	PLC74-5-1	12	38,00	92	-		Ball bearings
SB.BA1245.	CBK514	12	45,00	12	-		Ball bearings
SB.BA1228.	-	12	28	-	-		Ball bearings
SB.BA1241.	-	12	41	-	-		Ball bearings
SB.BA12,138.	CBK490	12,05	38,00	16	-		Ball bearings
SB.BA12,234.	PLC74-4	12,2	34,00	112	-		Ball bearings
SB.BA12,728,6.	CBK227	12,7	28,58	7,95	-		Ball bearings
SB.BA1329.	CBK492	13	29,00	12,5	-		Ball bearings
SB.BA1431.	-	14	31	-	-		Ball bearings
SB.BA1535.2	CBK312	15	35,00	8,999	-		Ball bearings
SB.BA1535.3	CBK488	15	35,00	11	-		Ball bearings
SB.BA153503.	CBK016	15	35,00	13	-		Ball bearings
SB.BA1540.2	XN132	15	40,00	11	-		Ball bearings
SB.BA1540.1	CBK392	15	40,00	13	-		Ball bearings
SB.BA15,935.	CBK242	15,875	35,00	11	-		Ball bearings
SB.BA15,928.2	PLC76-4-3	15,9	28,00	120,5	-		Ball bearings
SB.BA15,928.1	PLC76-4-2	15,9	28,00	122,5	-		Ball bearings
SB.BA15,928.3	PLC76-4-4	15,9	28,00	136	-		Ball bearings
SB.BA15,930.1	PLC76-4-1	15,9	30,00	136	-		Ball bearings
SB.BA15,930.2	CBK271	15,918	30,00	98	-		Ball bearings
SB.BA15,930.11	XN171	15,918	30,00	99	-		Ball bearings
SB.BA1630.4	PLC76-2-1	16	30,00	36	-		Ball bearings
SB.BA1630.5	PLC76-2-2	16	30,00	38,2	-		Ball bearings
SB.BA1630.6	PLC76-3	16	30,00	73	-		Ball bearings
SB.BA1630.7	PLC76-3-1	16	30,00	96	-		Ball bearings
SB.BA1630.8	PLC76-3-6	16	30,00	96	-		Ball bearings
SB.BA1630.1	CBK085	16	30,00	106	-		Ball bearings
SB.BA1630.9	PLC76-4	16	30,00	115	-		Ball bearings
SB.BA1630.13	XN170	16	30,00	138	-		Ball bearings
SB.BA1635.	XN027	16	35,00	14	-		Ball bearings
SB.BA1638.	PLC76-5	16	38,00	170	-		Ball bearings
SB.BA1630.	-	16	30	-	-		Ball bearings
SB.BA1735.1	PLC03-29	17	35,00	8,1	-		Ball bearings
SB.BA1735.3	XN020	17	35,00	10	-		Ball bearings
SB.BA1735.2	PLC23-7	17	35,00	12,3	-		Ball bearings
SB.BA1740.	CBK515	17	40,00	16	-		Ball bearings
SB.BA1747.	PLC03-6	17	47,00	12	-		Ball bearings
SB.BA1750.	XN157	17	50,00	16	-		Ball bearings
SB.BA1726.	-	17	26	-	-		Ball bearings
SB.BA1847.	CBK064	18	47,00	47	-		Ball bearings
SB.BA19,130,2.	CBK241	19,05	30,16	7,14	-		Ball bearings
SB.BA2030,2.1	CBK478	20	30,20	15	-		Ball bearings
SB.BA2030,2.2	CBK483	20	30,20	15	-		Ball bearings
SB.BA2047.2	CBK487	20	47,00	14	-		Ball bearings
SB.BA2047.3	CBK516	20	47,00	14	-		Ball bearings
SB.BA2047.4	CBK519	20	47,00	14	-		Ball bearings
SB.BA2047.1	CBK288	20	47,00	15	-		Ball bearings
SB.BA2047.5	XN026	20	47,00	19	-		Ball bearings
SB.BA2052.1	CBK517	20	52,00	15	-		Ball bearings
SB.BA2052.2	XN019	20	52,00	15	-		Ball bearings

- warehouse - order - phone



Clutch bearing



Wheel hub bearing

Bearing No.	Equivalent	Dimensions [mm]				Basic makes*	Bearing type
		d	D	B	L	-	
SB.BA20,236,3.1	CBK157	20,2	36,30	-	-		Ball bearings
SB.BA20,236,3.2	CBK158	20,2	36,30	-	-		Ball bearings
SB.BA2252.1	CBK167	22	52,00	15	-		Ball bearings
SB.BA2252.2	CBK486	22	52,00	15	-		Ball bearings
SB.BA22,236,9.2	PLC03-33	22,2	36,85	13,6	-		Ball bearings
SB.BA22,236,9.1	PLC03-19	22,2	36,85	15	-		Ball bearings
SB.BA22,335,8.	CBK346	22,25	35,78	9,652	-		Ball bearings
SB.BA22,556.	CBK254	22,5	56,00	16	-		Ball bearings
SB.BA2547.	XN018	25	47,00	12	-		Ball bearings
SB.BA2552.2	XN022	25	52,00	15	-		Ball bearings
SB.BA2552.1	1113208	25	52,00	25	-		Ball bearings
SB.BA2552.2	CBK047	25	52,00	25	-		Ball bearings
SB.BA2554,4.2	PLC04-24	25	54,40	32	-		Ball bearings
SB.BA2554,4.1	PLC04-23	25	54,40	36	-		Ball bearings
SB.BA2562.1	CBK308	25	62,00	11,303	-		Ball bearings
SB.BA2562.2	68305	25	62,00	12	-		Ball bearings
SB.BA2562.3	68341	25	62,00	14	-		Ball bearings
SB.BA2562.4	CBK299	25	62,00	17	-		Ball bearings
SB.BA2565,5.	PLC15-2	25	65,50	25,4	-		Ball bearings
SB.BA2575.	PLC05-12	25	75,00	17	-		Ball bearings
SB.BA25,450,8.	CBK069	25,4	50,80	9,5	-		Ball bearings
SB.BA25,846,2.	CBK354	25,8	46,20	-	-		Ball bearings
SB.BA26,440,6.	CBK358	26,4	40,60	-	-		Ball bearings
SB.BA2741.	CBK367	27	41,00	10	-		Ball bearings
SB.BA2847.1	CBK368	28	47,00	8,4	-		Ball bearings
SB.BA2867.2	114-618NR	28	67,00	18	-		Ball bearings
SB.BA2868.	CBK290	28	68,00	17	-		Ball bearings
SB.BA28,671,4.1	MS-11	28,575	71,43	20,638	-		Ball bearings
SB.BA28,671,4.2	CBK286	28,58	71,43	20,638	-		Ball bearings
SB.BA28,671,4.3	CBK296	28,58	71,43	20,638	-		Ball bearings
SB.BA29,553.	173-722	29,5	53,00	15	-		Ball bearings
SB.BA29,662.	CBK306	29,578	62,00	16	-		Ball bearings
SB.BA3049,3.1	PLC23-4	30	49,25	12	-		Ball bearings
SB.BA3049,3.2	PLC23-5	30	49,25	13,55	-		Ball bearings
SB.BA3055.1	CBK2062RS	30	55,00	18,8	-		Ball bearings
SB.BA3055.2	CBK2062Z	30	55,00	18,8	-		Ball bearings
SB.BA3055.3	CBK319	30	55,00	19	-		Ball bearings
SB.BA3062.1	CBK318	30	62,00	11,303	-		Ball bearings
SB.BA3062.1	CBK245	30	62,00	16	-		Ball bearings
SB.BA3062.2	PLC04-21	30	62,00	16	-		Ball bearings
SB.BA3065.1	CBK086	30	65,00	21	-		Ball bearings
SB.BA3065.2	CBK0868	30	65,00	21	-		Ball bearings
SB.BA3072.	CBK442	30	72,00	37	-		Ball bearings
SB.BA3074,2.	PLC05-13	30	74,20	16	-		Ball bearings
SB.BA3075.	CBK083	30	75,00	19	-		Ball bearings
SB.BA3062.2	-	30	62	-	-		Ball bearings
SB.BA30,753.	173-723	30,7	53,00	15	-		Ball bearings
SB.BA30,955.	CBK166	30,9	55,00	20,8	-		Ball bearings
SB.BA31,879,4.	CBK414	31,755	79,35	22,22	-		Ball bearings
SB.BA3249.	173-655	32	49,00	17	-		Ball bearings
SB.BA3264.	CBK356	32	64,00	-	-		Ball bearings
SB.BA3267.	CBK182A	32	67,00	13	-		Ball bearings
SB.BA32,957,2.	CBK244	32,89	57,15	15,11	-		Ball bearings
SB.BA3553,6.	PLC24-2	35	53,60	15,5	-		Ball bearings
SB.BA3568.	PLC15-12	35	68,00	37	-		Ball bearings
SB.BA3572.4	CBK307	35	72,00	17	-		Ball bearings

* Other products also available

21.1 SPECIAL BEARINGS



Cardan joint



Water pump bearing

Bearing No.	Equivalent	Dimensions [mm]				Basic makes*	Bearing type
		d	D	B	L	-	
SB.BA3572.1	CBK294	35	72,00	21,46	-		Ball bearings
SB.BA3572.2	CBK135	35	72,00	25	-		Ball bearings
SB.BA3572.3	207KRRAH03	35	72,00	25	-		Ball bearings
SB.BA3580.1	CBK063	35	80,00	30	-		Ball bearings
SB.BA3580.2	CBK065	35	80,00	30	-		Ball bearings
SB.BA3585.	PLC06-3-2	35	85,00	17	-		Ball bearings
SB.BA3590.2	PLC06-6-2	35	90,00	23	-		Ball bearings
SB.BA3593,5.	11/6307-2RS	35	93,50	21	-		Ball bearings
SB.BA3596,3.	12/6307-2RSA	35	96,25	21	-		Ball bearings
SB.BA3597.	12/6307-2RSA	35	97,00	21	-		Ball bearings
SB.BA35101,5.	PLC07-2-2	35	101,50	21	-		Ball bearings
SB.BA35,962.	CBK269	35,9	62,00	21,3	-		Ball bearings
SB.BA36,473,1.	CBK293	36,373	73,05	23,622	-		Ball bearings
SB.BA3762.2	CBK302	37	62,00	21,3	-		Ball bearings
SB.BA3762.1	CBK234	37	62,00	21,5	-		Ball bearings
SB.BA38,980.1	114-743-2RSRC5	38,89	80,00	21	-		Ball bearings
SB.BA38,980.2	CBK295	38,89	80,00	27,508	-		Ball bearings
SB.BA4080.	114-732-2RSR	40	80,00	21	-		Ball bearings
SB.BA4090.1	CBK115	40	90,00	20	-		Ball bearings
SB.BA4090.2	CBK115Z	40	90,00	20	-		Ball bearings
SB.BA4090.3	CBK397	40	90,00	23	-		Ball bearings
SB.BA40,561.	114-731	40,5	61,00	40,5	-		Ball bearings
SB.BA4376.	CBK482	43	76,00	-	-		Ball bearings
SB.BA45100.	CBK343	45	100,00	21	-		Ball bearings
SB.BA5081,5.	CBK042	50	81,50	-	-		Ball bearings
SB.BA5081,6.	114-733	50	81,60	25	-		Ball bearings
SB.BA5082,5.	CBK355	50	82,50	-	-		Ball bearings
SB.BA50,690.	114-727	50,6	90,00	49,7	-		Ball bearings
SB.BA52,485.	CBK197	52,388	85,00	16	-		Ball bearings
SB.BA52,491,6.	114-742	52,4	91,60	22,8	-		Ball bearings
SB.BA55100.	PLC06-11	55	100,00	55	-		Ball bearings
SB.BA63,5100.	CBK297	63,505	100,00	17,463	-		Ball bearings
SB.BA65100.	CBK363	65	100,00	27	-		Ball bearings
SB.BA75117.	114-740	75	117,00	27	-		Ball bearings
SB.BA80125.	175-707	80	125,00	47	-		Ball bearings
SB.BA100130.	CBK080	100	130,00	10	-		Ball bearings
SB.BA115145.	CBK467	115	145,00	18	-		Ball bearings
SB.BA150215.	CBK398	150	215,00	144	-		Ball bearings
SB.BA155250.	CBK061	155	250,00	54	-		Ball bearings
SB.BA165250,5.	CBK060	165	250,50	35	-		Ball bearings
SB.BA280335.	CBK230	280	335,00	25	-		Ball bearings
SB.BA330390.	CBK229	330	390,00	25	-		Ball bearings
SB.BA360440.	CBK138	360	440,00	25	-		Ball bearings
SB.BA380440.	CBK231	380	440,00	27	-		Ball bearings
SB.BA450520.	CBK232	450	520,00	30	-		Ball bearings
Ball bearings of a water pump							
SB.BA1530.	PLC75-1	15,008	30,00	90,5	-		Ball bearings of a water pump
SB.BA15,930.10	CBK513	15,918	30,00	136,398	-		Ball bearings of a water pump
SB.BA15,930.3	CBK474	15,918	30,00	98,17	-		Ball bearings of a water pump
SB.BA15,930.4	CBK475	15,918	30,00	106,17	-		Ball bearings of a water pump
SB.BA15,930.5	CBK476	15,918	30,00	93,5	-		Ball bearings of a water pump
SB.BA15,930.6	CBK507	15,918	30,00	119	-		Ball bearings of a water pump
SB.BA15,930.7	CBK508	15,918	30,00	127,5	-		Ball bearings of a water pump
SB.BA15,930.8	CBK511	15,918	30,00	98,17	-		Ball bearings of a water pump
SB.BA15,930.9	CBK512	15,918	30,00	100,1	-		Ball bearings of a water pump
SB.BA1630.10	PLC76-7	16	30,00	115	-		Ball bearings of a water pump

- warehouse - order - phone



Clutch bearing



Wheel hub bearing

Bearing No.	Equivalent	Dimensions [mm]				Basic makes*	Bearing type
		d	D	B	L	-	
SB.BA1630.11	PLC76-7-1	16	30,00	92	-		Ball bearings of a water pump
SB.BA1630.12	PLC76-7-2	16	30,00	106	-		Ball bearings of a water pump
SB.BA1630.2	PLC75-2	16	30,00	92	-		Ball bearings of a water pump
SB.BA1630.3	PLC75-2-6	16	30,00	115	-		Ball bearings of a water pump
SB.BA2552.1	PLC77-3-1	25	52,00	134,5	-		Ball bearings of a water pump
SB.BA2555.1	PLC77-2	25	55,00	127	-		Ball bearings of a water pump
SB.BA2555.2	PLC77-2-4	25	55,00	145	-		Ball bearings of a water pump
SB.BA2555.3	PLC77-2-5	25	55,00	157	-		Ball bearings of a water pump
Angular-contact radial ball bearings							
SB.AC1638,1.	CBK070	16	38,10	21	-		Angular-contact radial ball bearings
SB.AC2050.2	XN025	20	50,00	20,06	-		Angular-contact radial ball bearings
SB.AC2050.1	CBK075	20	50,00	20,6	-		Angular-contact radial ball bearings
SB.AC21,834,5.	CBK506	21,8	34,50	20,6	-		Angular-contact radial ball bearings
SB.AC21,848.	CBK168	21,8	48,00	20,6	-		Angular-contact radial ball bearings
SB.AC2552.	3205 2RSMA	25	52,00	206	-		Angular-contact radial ball bearings
SB.AC2568.	CBK267	25	68,00	19	-		Angular-contact radial ball bearings
SB.AC3062.	CBK316	30	62,00	26,99	-		Angular-contact radial ball bearings
SB.AC3075.	CBK371	30	75,00	19	-		Angular-contact radial ball bearings
SB.AC31,861,9.	CBK291	31,75	61,91	15,876	-		Angular-contact radial ball bearings
SB.AC31,869,9.	CBK256	31,75	69,85	17,4625	-		Angular-contact radial ball bearings
SB.AC3292.1	CBK300	32	92,00	32	-		Angular-contact radial ball bearings
SB.AC3292.2	CBK357	32	92,00	35	-		Angular-contact radial ball bearings
SB.AC3464.	CBK268	34	64,00	37	-		Angular-contact radial ball bearings
SB.AC3568.	CBK409	35	68,00	37	-		Angular-contact radial ball bearings
SB.AC3572.2	CBK301	35	72,00	27	-		Angular-contact radial ball bearings
SB.AC3572.1	CBK218	35	72,00	28	-		Angular-contact radial ball bearings
SB.AC3672.	CBK292	36	72,00	33	-		Angular-contact radial ball bearings
SB.AC4076.	CBK305	40	76,00	33	-		Angular-contact radial ball bearings
SB.AC4080.1	CBK213	40	80,00	30,2	-		Angular-contact radial ball bearings
SB.AC4080.3	CBK328	40	80,00	30,2	-		Angular-contact radial ball bearings
SB.AC4080.4	CBK360	40	80,00	34	-		Angular-contact radial ball bearings
SB.AC4080.2	CBK235B	40	80,00	38,2	-		Angular-contact radial ball bearings
SB.AC40110.	CBK204	40	110,00	32,4	-		Angular-contact radial ball bearings
SB.AC50116.	CBK207	50	116,00	33,8	-		Angular-contact radial ball bearings
SB.AC57,2120,7.	CBK004	57,15	120,65	57,15	-		Angular-contact radial ball bearings
SB.AC69,9120,7.	CBK003	69,85	120,65	57,15	-		Angular-contact radial ball bearings
SB.AC76,288,9.	CBK449	76,2	88,90	6,35	-		Angular-contact radial ball bearings
SB.AC100143.	CBK460	100	143,00	-	-		Angular-contact radial ball bearings
SB.AC101140.	CBK463	101	140,00	-	-		Angular-contact radial ball bearings
SB.AC101,6114.	CBK450	101,6	114,30	6,35	-		Angular-contact radial ball bearings
SB.AC101,6127.	CBK451	101,6	127,00	12,7	-		Angular-contact radial ball bearings
SB.AC109160.	CBK205	109	160,00	66	-		Angular-contact radial ball bearings
SB.AC110175.1	926722	110	175,00	30	-		Angular-contact radial ball bearings
SB.AC110175.2	CBK032	110	175,00	30	-		Angular-contact radial ball bearings
SB.AC115145.	CBK470	115	145,00	18	-		Angular-contact radial ball bearings
SB.AC130205.	CBK033	130	205,00	34	-		Angular-contact radial ball bearings
SB.AC140215.	CBK031	140	215,00	43	-		Angular-contact radial ball bearings
SB.AC165,1190.	CBK452	165,1	190,50	12,7	-		Angular-contact radial ball bearings
SB.AC188221.	CBK464	188	221,00	-	-		Angular-contact radial ball bearings
SB.AC188232.	CBK461	188	232,00	-	-		Angular-contact radial ball bearings
SB.AC195225.	CBK465	195	225,00	-	-		Angular-contact radial ball bearings
SB.AC200228.	CBK469	200	228,00	26	-		Angular-contact radial ball bearings
SB.AC200240.	CBK432	200	240,00	20	-		Angular-contact radial ball bearings
SB.AC200270.	CBK411	200	270,00	24	-		Angular-contact radial ball bearings
SB.AC203,2222.	CBK454	203,2	222,25	12,7	-		Angular-contact radial ball bearings
SB.AC205270.	CBK222A	205	270,00	28	-		Angular-contact radial ball bearings

* Other products also available

21.1 SPECIAL BEARINGS



Cardan joint



Water pump bearing

Bearing No.	Equivalent	Dimensions [mm]				Basic makes*	Bearing type
		d	D	B	L	-	
SB.AC228,6254.	CBK453	228,6	254,00	12,7	-		Angular-contact radial ball bearings
SB.AC279,4368.	CBK325	279,4	368,30	44,45	-		Angular-contact radial ball bearings
SB.AC355,6393.	CBK455	355,6	393,70	19,05	-		Angular-contact radial ball bearings
SB.AC720907.	CBK459	720	907,00	40	-		Angular-contact radial ball bearings
Angular-contact radial ball bearing with a split inner ring							
BC25520020,6.	133-718	25	52,00	20,6	-		Angular-contact radial ball bearing with a split inner ring
BC25520037.	DAC25520037	25	52,00	37	-		Angular-contact radial ball bearing with a split inner ring
BC25520043.	DAC25520043	25	52,00	43	-		Angular-contact radial ball bearing with a split inner ring
BC25550043.	DAC25550043	25	55,00	43	-		Angular-contact radial ball bearing with a split inner ring
BC25560032.	DAC25560032	25	56,00	32	-		Angular-contact radial ball bearing with a split inner ring
BC27600050.	DAC27600050	27	60,00	50	-		Angular-contact radial ball bearing with a split inner ring
BC28610042.	DAC28610042	28	61,00	42	-		Angular-contact radial ball bearing with a split inner ring
BC30600037.	CBK199	30	60,00	37	-		Angular-contact radial ball bearing with a split inner ring
BC30600037.	DAC30600037	30	60,00	37	-		Angular-contact radial ball bearing with a split inner ring
BC30600337.	133-637	30	60,03	37	-		Angular-contact radial ball bearing with a split inner ring
BC30600337.	CBK441	30	60,03	37	-		Angular-contact radial ball bearing with a split inner ring
BC30600337.	DAC30600337	30	60,03	37	-		Angular-contact radial ball bearing with a split inner ring
BC34620037.	DAC34620037	34	62,00	37	-		Angular-contact radial ball bearing with a split inner ring
BC34640037.	133-639	34	64,00	37	-		Angular-contact radial ball bearing with a split inner ring
BC34640037.	DAC34640037	34	64,00	37	-		Angular-contact radial ball bearing with a split inner ring
BC34660037.	DAC34660037	34	66,00	37	-		Angular-contact radial ball bearing with a split inner ring
BC35640037.	DAC35640037	35	64,00	37	-		Angular-contact radial ball bearing with a split inner ring
BC35650035.	DAC35650035	35	65,00	35	-		Angular-contact radial ball bearing with a split inner ring
BC35660032.	DAC35660032	35	66,00	32	-		Angular-contact radial ball bearing with a split inner ring
BC35660033.	DAC35660033	35	66,00	33	-		Angular-contact radial ball bearing with a split inner ring
BC35660037.	DAC35660037	35	66,00	37	-		Angular-contact radial ball bearing with a split inner ring
BC35680037.	134-643	35	68,00	37	-		Angular-contact radial ball bearing with a split inner ring
BC35680037.	DAC35680037	35	68,00	37	-		Angular-contact radial ball bearing with a split inner ring
BC35680233/30.	DAC35680233/30	35	68,02	33/30	-		Angular-contact radial ball bearing with a split inner ring
BC35720028.	DAC35720028	35	72,00	28	-		Angular-contact radial ball bearing with a split inner ring
BC35720033.	DAC35720033	35	72,00	33	-		Angular-contact radial ball bearing with a split inner ring
BC35720034.	DAC35720034	35	72,00	34	-		Angular-contact radial ball bearing with a split inner ring
BC35720433.	DAC35720433	35	72,04	33	-		Angular-contact radial ball bearing with a split inner ring
BC37720037.	DAC37720037	37	72,00	37	-		Angular-contact radial ball bearing with a split inner ring
BC37720437.	DAC37720437	37	72,04	37	-		Angular-contact radial ball bearing with a split inner ring
BC37740045.	DAC37740045	37	74,00	45	-		Angular-contact radial ball bearing with a split inner ring
BC38700038.	DAC38700038	38	70,00	38	-		Angular-contact radial ball bearing with a split inner ring
BC38710233/30.	DAC38710233/30	38	71,02	33/30	-		Angular-contact radial ball bearing with a split inner ring
BC38720040.	DAC38720040	38	72,00	40	-		Angular-contact radial ball bearing with a split inner ring
BC38720236/33.	DAC38720236/33	38	72,02	36/33	-		Angular-contact radial ball bearing with a split inner ring
BC38730040.	DAC38730040	38	73,00	40	-		Angular-contact radial ball bearing with a split inner ring
BC38740030.	DAC38740030	38	74,00	30	-		Angular-contact radial ball bearing with a split inner ring
BC38740050.	DAC38740050	38	74,00	50	-		Angular-contact radial ball bearing with a split inner ring
BC38740236/33.	DAC38740236/33	38	74,02	36/33	-		Angular-contact radial ball bearing with a split inner ring
BC39680037.	134-738	39	68,00	37	-		Angular-contact radial ball bearing with a split inner ring
BC39680037.	DAC39680037	39	68,00	37	-		Angular-contact radial ball bearing with a split inner ring
BC39720037.	DAC39720037	39	72,00	37	-		Angular-contact radial ball bearing with a split inner ring
BC39740039.	DAC39740039	39	74,00	39	-		Angular-contact radial ball bearing with a split inner ring
BC39/41750037.	DAC39/41750037	39/41	75,00	37	-		Angular-contact radial ball bearing with a split inner ring
BC40720037.	DAC40720037	40	72,00	37	-		Angular-contact radial ball bearing with a split inner ring
BC40720036/33.	DAC40720036/33	40	72,00	36/33	-		Angular-contact radial ball bearing with a split inner ring
BC40740040.	DAC40740040	40	74,00	40	-		Angular-contact radial ball bearing with a split inner ring
BC40740036/34.	DAC40740036/34	40	74,00	36/34	-		Angular-contact radial ball bearing with a split inner ring
BC40750037.	DAC40750037	40	75,00	37	-		Angular-contact radial ball bearing with a split inner ring
BC40760041/38.	DAC40760041/38	40	76,00	41/38	-		Angular-contact radial ball bearing with a split inner ring
BC40800031.	DAC40800031	40	80,00	31	-		Angular-contact radial ball bearing with a split inner ring

- warehouse - order - phone



Clutch bearing

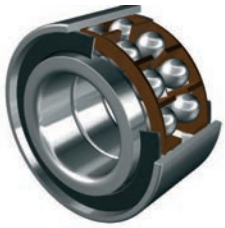

Wheel hub bearing

Bearing No.	Equivalent	Dimensions [mm]				Basic makes*	Bearing type
		d	D	B	L	-	
BC40800036.	DAC40800036	40	80,00	36	-		Angular-contact radial ball bearing with a split inner ring
BC40800036/34.	DAC40800036/34	40	80,00	36/34	-		Angular-contact radial ball bearing with a split inner ring
BC408402538.	DAC408402538	40	84,02	538	-		Angular-contact radial ball bearing with a split inner ring
BC42750037.	DAC42750037	42	75,00	37	-		Angular-contact radial ball bearing with a split inner ring
BC4276003835.	DAC4276003835	42	76,00	3835	-		Angular-contact radial ball bearing with a split inner ring
BC42800037.	DAC42800037	42	80,00	37	-		Angular-contact radial ball bearing with a split inner ring
BC42800042.	134-739	42	80,00	42	-		Angular-contact radial ball bearing with a split inner ring
BC428000342.	DAC428000342	42	80,00	342	-		Angular-contact radial ball bearing with a split inner ring
BC42800342.	DAC42800342	42	80,03	42	-		Angular-contact radial ball bearing with a split inner ring
BC42820036.	DAC42820036	42	82,00	36	-		Angular-contact radial ball bearing with a split inner ring
BC42820037.	DAC42820037	42	82,00	37	-		Angular-contact radial ball bearing with a split inner ring
BC42840039.	DAC42840039	42	84,00	39	-		Angular-contact radial ball bearing with a split inner ring
BC43800038.	DAC43800038	43	80,00	38	-		Angular-contact radial ball bearing with a split inner ring
BC43820045.	DAC43820045	43	82,00	45	-		Angular-contact radial ball bearing with a split inner ring
BC43/45820037.	DAC43/45820037	43/45	82,00	37	-		Angular-contact radial ball bearing with a split inner ring
BC45750023.	134-709	45	75,00	23	-		Angular-contact radial ball bearing with a split inner ring
BC45800045.	DAC45800045	45	80,00	45	-		Angular-contact radial ball bearing with a split inner ring
BC45840039.	DAC45840039	45	84,00	39	-		Angular-contact radial ball bearing with a split inner ring
Tapered roller bearings							
SB.TA1535.1	CBK170B	15	35,00	10,75	-		Tapered roller bearings
SB.TA1535.	-	15	35,00	-	-		Tapered roller bearings
SB.TA1542.	CBK257	15	42,00	13,5	-		Tapered roller bearings
SB.TA1939.	-	19	39,00	-	-		Tapered roller bearings
SB.TA19,142,2.3	CBK087	19,05	42,24	16,637	-		Tapered roller bearings
SB.TA2042.	CBK340	20	42,00	15	-		Tapered roller bearings
SB.TA2043.	CBK173	20	43,00	12	-		Tapered roller bearings
SB.TA2162.	PLC64-2-3	21	62,00	17	-		Tapered roller bearings
SB.TA2241.	CBK323B	22	41,00	14,4	-		Tapered roller bearings
SB.TA2352.	CBK258	23	52,00	14,26	-		Tapered roller bearings
SB.TA23,857,2.	CBK160	23,813	57,15	17,463	-		Tapered roller bearings
SB.TA2565,5.	PLC65-4	25	65,50	40	-		Tapered roller bearings
SB.TA25,450,3.	CBK504	25,4	50,29	14,224	-		Tapered roller bearings
SB.TA25,459,5.	CBK247	25,4	59,53	23,114	-		Tapered roller bearings
SB.TA2652.	CBK171	26	52,00	14,26	-		Tapered roller bearings
SB.TA2657.	-	26	57,00	-	-		Tapered roller bearings
SB.TA2657,2.	CBK359	26	57,15	17,51	-		Tapered roller bearings
SB.TA2750,3.	CBK503	26,988	50,29	14,224	-		Tapered roller bearings
SB.TA2750,3.1	CBK210	27	50,30	14,73	-		Tapered roller bearings
SB.TA2750,3.2	CBK233	27	50,30	14,73	-		Tapered roller bearings
SB.TA29,147.	CBK089	29,116	47,00	-	-		Tapered roller bearings
SB.TA29,147,5.	CBK090	29,116	47,50	-	-		Tapered roller bearings
SB.TA3055.	CBK525	30	55,00	19	-		Tapered roller bearings
SB.TA3060.	CBK522	30	60,00	37	-		Tapered roller bearings
SB.TA3062.	PLC64-4-2	30	62,00	16	-		Tapered roller bearings
SB.TA30,264,3.	CBK248	30,162	64,29	21,433	-		Tapered roller bearings
SB.TA31,859,1.1	CBK088	31,75	59,13	16,764	-		Tapered roller bearings
SB.TA31,859,1.2	CBK502	31,75	59,13	16,764	-		Tapered roller bearings
SB.TA31,859,1.3	PLC64-8	31,75	59,13	16,764	-		Tapered roller bearings
SB.TA31,873.	CBK265	31,75	73,03	27,783	-		Tapered roller bearings
SB.TA3349,2.	GPZ-977907A	33,02	49,23	-	-		Tapered roller bearings
SB.TA3358.	GPZ-877907A	33,02	58,00	-	-		Tapered roller bearings
SB.TA33,349,2.	PLC63-1	33,297	49,20	11,5	-		Tapered roller bearings
SB.TA33,357.	PLC64-3	33,297	57,00	17,27	-		Tapered roller bearings
SB.TA33,376,2.	CBK093	33,338	76,20	28,575	-		Tapered roller bearings

* Other products also available

https://nppnovoteh.com

21.1 SPECIAL BEARINGS



Cardan joint



Water pump bearing

Bearing No.	Equivalent	Dimensions [mm]				Basic makes*	Bearing type
		d	D	B	L	-	
SB.TA34,960.	CBK348	34,925	60,01	19,583	-		Tapered roller bearings
SB.TA34,965,1.	CBK333	34,925	65,09	13,97	-		Tapered roller bearings
SB.TA34,973.1	CBK350	34,925	73,03	24,608	-		Tapered roller bearings
SB.TA34,973.2	PLC65-3	34,925	73,03	24,608	-		Tapered roller bearings
SB.TA34,976,2.	CBK094	34,925	76,20	28,575	-		Tapered roller bearings
SB.TA3559,1.	CBK479	34,988	59,13	16,764	-		Tapered roller bearings
SB.TA3560.	CBK324	35	60,00	18,5	-		Tapered roller bearings
SB.TA3580.	514-747	35	80,00	32	-		Tapered roller bearings
SB.TA3668.	CBK091	36	68,00	16,5	-		Tapered roller bearings
SB.TA3690.	PLC66-8-1	36	90,00	33	-		Tapered roller bearings
SB.TA3863.	PLC64-7	38	63,00	17	-		Tapered roller bearings
SB.TA38,165,1.1	CBK298	38,1	65,09	18,288	-		Tapered roller bearings
SB.TA38,165,1.2	CBK289	38,113	65,11	18,364	-		Tapered roller bearings
SB.TA3964.	CBK187	39	63,97	20,64	-		Tapered roller bearings
SB.TA3973.	-	39	73,00	-	-		Tapered roller bearings
SB.TA4070.	CBK172	40	70,00	16,5	-		Tapered roller bearings
SB.TA4073.	-	40	73,00	-	-		Tapered roller bearings
SB.TA4090.2	CBK524	40	90,00	33	-		Tapered roller bearings
SB.TA4090.1	CBK448	40	90,00	41,75	-		Tapered roller bearings
SB.TA41,373,4.1	CBK416	41,275	73,43	19,812	-		Tapered roller bearings
SB.TA41,373,4.2	S-029	41,275	73,43	19,812	-		Tapered roller bearings
SB.TA41,382,6.	CBK387	41,275	82,55	25,654	-		Tapered roller bearings
SB.TA44,582,9.	CBK505	44,45	82,93	25,4	-		Tapered roller bearings
SB.TA44,587,3.	CBK266	44,45	87,31	30,886	-		Tapered roller bearings
SB.TA44,595,3.1	CBK327	44,45	95,25	28,575	-		Tapered roller bearings
SB.TA44,595,3.2	CBK334X1	44,45	95,25	28,575	-		Tapered roller bearings
SB.TA4580.	CBK394	45	80,00	26	-		Tapered roller bearings
SB.TA45,682,9.	CBK349	45,618	82,93	25,4	-		Tapered roller bearings
SB.TA4675.	CBK331A	46	75,00	18	-		Tapered roller bearings
SB.TA47,696,8.	CBK351	47,625	96,84	28,575	-		Tapered roller bearings
SB.TA5090.	CBK523	50	90,00	20	-		Tapered roller bearings
SB.TA50,895,3.	CBK322	50,8	95,25	28,575	-		Tapered roller bearings
SB.TA50,8100.	CBK393	50,8	100,00	35	-		Tapered roller bearings
SB.TA50,8101,6.	CBK249	50,8	101,60	36,068	-		Tapered roller bearings
SB.TA50,8104,8.	CBK347	50,8	104,78	36,512	-		Tapered roller bearings
SB.TA5785.	CBK494	57	85,00	19	-		Tapered roller bearings
SB.TA57,2104,8.	CBK335	57,15	104,78	29,317	-		Tapered roller bearings
SB.TA60127.	CBK261	60	127,00	36,513	-		Tapered roller bearings
SB.TA60135.	CBF-400371	60	135,00	-	-		Tapered roller bearings
SB.TA63,595.	CBK200	63,5	95,00	15,5	-		Tapered roller bearings
SB.TA6595.	CBK496	65	95,00	16	-		Tapered roller bearings
SB.TA65120.	CBK278	65	120,00	38,5	-		Tapered roller bearings
SB.TA66,7110.	CBK336	66,675	110,00	21,996	-		Tapered roller bearings
SB.TA66,7112,7.	CBK337	66,675	112,71	30,048	-		Tapered roller bearings
SB.TA70110.	PLC67-6	70	110,00	21,5	-		Tapered roller bearings
SB.TA70136,5.	CBK262	70	136,53	46,038	-		Tapered roller bearings
SB.TA73112,7.	CBK344	73,025	112,71	25,4	-		Tapered roller bearings
SB.TA76,2136,5.	CBK528	76,2	136,53	29,769	-		Tapered roller bearings
SB.TA79,4150,1.	CBK005	79,375	150,09	28	-		Tapered roller bearings
SB.TA80160.	CBK007	80	160,00	40	-		Tapered roller bearings
SB.TA82,6125,4.	CBK338	82,55	125,41	25,4	-		Tapered roller bearings
SB.TA88,9152,4.	515-745	88,9	152,40	39,688	-		Tapered roller bearings
SB.TA95,3157,2.	CBK281	95,25	157,16	36,116	-		Tapered roller bearings
SB.TA95,3171,5.	CBK006	95,25	171,45	34	-		Tapered roller bearings
SB.TA96,8148,4.	CBK529	96,838	148,43	28,971	-		Tapered roller bearings
SB.TA100160.	CBK263	100	160,00	40	-		Tapered roller bearings

- warehouse - order - phone





Clutch bearing



Wheel hub bearing

Bearing No.	Equivalent	Dimensions [mm]				Basic makes*	Bearing type
		d	D	B	L	-	
SB.TA108158,8.	CBK339	107,95	158,75	21,438	-		Tapered roller bearings
SB.TA110180.	CBK264	110	180,00	41,275	-		Tapered roller bearings
SB.TA127206,4.	PLC610-2	127	206,40	108	-		Tapered roller bearings
SB.TA127235.	PLC610-7	127	234,98	143,6	-		Tapered roller bearings
SB.TA140240.	CBK008	140	240,00	56,6	-		Tapered roller bearings
SB.TA165260.	PLC610-17	165	260,00	150	-		Tapered roller bearings
SB.TA200312.	PLC611-19	200	312,00	200	-		Tapered roller bearings
SB.TA203,2360.	PLC611-3	203,2	360,05	88,9	-		Tapered roller bearings
SB.TA220342.	PLC611-20	220	342,00	218	-		Tapered roller bearings
SB.TA220400.	CBK436	220	400,00	173	-		Tapered roller bearings
SB.TA225385.	PLC611-7	225	385,00	255	-		Tapered roller bearings
SB.TA228,6355.	PLC611-4	228,6	355,65	146,8	-		Tapered roller bearings
SB.TA240320.	PLC611-9	240	320,00	56	-		Tapered roller bearings
SB.TA244,5381.	CBK399	244,475	381,00	76,2	-		Tapered roller bearings
SB.TA254431,8.	PLC612-4	254	431,77	173,788	-		Tapered roller bearings
SB.TA279420.	PLC612-30	279	420,00	250	-		Tapered roller bearings
SB.TA304,9412.	PLC612-32	304,902	412,65	266,7	-		Tapered roller bearings
SB.TA320480.	PLC612-14-1	320	480,00	320	-		Tapered roller bearings
SB.TA346,1489.	PLC612-5	346,075	489,00	360	-		Tapered roller bearings
SB.TA381,1479.	CBK433	381,05	479,48	47,625	-		Tapered roller bearings
SB.TA400540.	PLC612-23-1	400	540,00	280	-		Tapered roller bearings
SB.TA431,8571.1	PLC612-29-1	431,8	571,50	336,55	-		Tapered roller bearings
SB.TA431,8571.2	PLC612-29-2	431,8	571,50	336,55	-		Tapered roller bearings
SB.TA530780.	PLC612-22	530	780,00	450	-		Tapered roller bearings
SB.TA609,8762.	CBK201A	609,8	762,00	50,8	-		Tapered roller bearings
SB.TA620800.	PLC612-21	620	800,00	365	-		Tapered roller bearings
Cylindrical roller bearings							
SB.RO1497.	-	14	97,00	-	-		Cylindrical roller bearings
SB.RO15,950,8.	WP-004	15,875	50,80	25,4	-		Cylindrical roller bearings
SB.RO2052.	GPZ-102304	20	52,00	15	-		Cylindrical roller bearings
SB.RO2056.	CBK273	20	56,00	15	-		Cylindrical roller bearings
SB.RO2247.1	CBK169	22	47,00	18	-		Cylindrical roller bearings
SB.RO2247.2	CBK497	22	47,00	18	-		Cylindrical roller bearings
SB.RO2537.	PLC43-18	25	37,00	28	-		Cylindrical roller bearings
SB.RO2552.	CBK272	25	52,00	13,5	-		Cylindrical roller bearings
SB.RO2555.	CBK084	25	55,00	18	-		Cylindrical roller bearings
SB.RO27,552.	PLC44-17	27,5	52,00	20	-		Cylindrical roller bearings
SB.RO3060.	PLC44-6	30	60,00	28	-		Cylindrical roller bearings
SB.RO3061,9.1	CBK239	30	61,94	19,05	-		Cylindrical roller bearings
SB.RO3061,9.2	CBK240	30	61,94	23,813	-		Cylindrical roller bearings
SB.RO3080.	CBF-492017	30	80,00	21	-		Cylindrical roller bearings
SB.RO3560.	PLC44-18	35	60,00	26	-		Cylindrical roller bearings
SB.RO3590.1	CBK009	35	90,00	21	-		Cylindrical roller bearings
SB.RO4060.2	PLC44-20	40	60,00	24,75	-		Cylindrical roller bearings
SB.RO4060.1	PLC44-16	40	60,00	30	-		Cylindrical roller bearings
SB.RO4065.	PLC44-13	40	65,00	21	-		Cylindrical roller bearings
SB.RO4095.	CBK021	40	95,00	23	-		Cylindrical roller bearings
SB.RO4165.	-	41	65,00	-	-		Cylindrical roller bearings
SB.RO4766.	-	47	66,00	-	-		Cylindrical roller bearings
SB.RO4767.	-	47	67,00	-	-		Cylindrical roller bearings
SB.RO49,980.	CBK238	49,93	80,00	15	-		Cylindrical roller bearings
SB.RO55110.	CBK130	55	110,00	40	-		Cylindrical roller bearings
SB.RO57,2114,3.	CBK198	57,15	114,30	55,56	-		Cylindrical roller bearings
SB.RO65105.	CBK057	65	105,00	76	-		Cylindrical roller bearings
SB.RO72190.	CBK040	72	190,00	85	-		Cylindrical roller bearings
SB.RO85180.	PLC43-11	85	180,00	60	-		Cylindrical roller bearings

* Other products also available

https://nppnovoteh.com

21.1 SPECIAL BEARINGS



Cardan joint



Water pump bearing

Bearing No.	Equivalent	Dimensions [mm]				Basic makes*	Bearing type
		d	D	B	L	-	
SB.RO88,9133,4.	CBK150	88,913	133,35	101,6	-		Cylindrical roller bearings
SB.RO95170.	CBK081	95	170,00	88	-		Cylindrical roller bearings
SB.RO100180.	CBK039	100	180,00	34	-		Cylindrical roller bearings
SB.RO101165.1	CBK133	101	165,00	114	-		Cylindrical roller bearings
SB.RO101165.2	CBK133C4	101	165,00	114	-		Cylindrical roller bearings
SB.RO101,6165.	CBK127	101,6	165,00	102	-		Cylindrical roller bearings
SB.RO101,6152.	CBK149	101,613	152,40	127	-		Cylindrical roller bearings
SB.RO105165.1	CBK126	105	165,00	102	-		Cylindrical roller bearings
SB.RO105165.2	CBK134	105	165,00	105	-		Cylindrical roller bearings
SB.RO105165.3	CBK134C4	105	165,00	105	-		Cylindrical roller bearings
SB.RO110290.	CBK152	110	290,00	154	-		Cylindrical roller bearings
SB.RO112170.	8845	112	170,00	38	-		Cylindrical roller bearings
SB.RO118240.	PLC410-23	118	240,00	80	-		Cylindrical roller bearings
SB.RO120240.	PLC410-13	120	240,00	80	-		Cylindrical roller bearings
SB.RO120260.	CBK022	120	260,00	110	-		Cylindrical roller bearings
SB.RO126,9196.	CBK151	126,911	196,85	152,5	-		Cylindrical roller bearings
SB.RO127184,2.1	CBK400	127	184,15	101,6	-		Cylindrical roller bearings
SB.RO127184,2.2	CBK401	127	184,15	114,3	-		Cylindrical roller bearings
SB.RO130230.	CBK255	130	230,00	160	-		Cylindrical roller bearings
SB.RO130240.1	CBK457	130	240,00	60	-		Cylindrical roller bearings
SB.RO130240.2	PLC410-15	130	240,00	80	-		Cylindrical roller bearings
SB.RO130240.3	PLC410-33	130	240,00	80	-		Cylindrical roller bearings
SB.RO130250.	PLC410-17	130	250,00	80	-		Cylindrical roller bearings
SB.RO141,2206.	CBK439	141,23	206,38	65	-		Cylindrical roller bearings
SB.RO150230.	CBK407	150	230,00	57	-		Cylindrical roller bearings
SB.RO160300.	PLC411-10	160	300,00	84	-		Cylindrical roller bearings
SB.RO170250.	PLC410-27	170	250,00	30	-		Cylindrical roller bearings
SB.RO170280.	CBK012	170	280,00	220	-		Cylindrical roller bearings
SB.RO180520.	PLC512-17	180	520,00	256	-		Cylindrical roller bearings
SB.RO190320.	CBK082	190	320,00	157	-		Cylindrical roller bearings
SB.RO200260.	CBK079	200	260,00	225	-		Cylindrical roller bearings
SB.RO200360.	CBK132	200	360,00	98	-		Cylindrical roller bearings
SB.RO205280.	CBK224	205	280,00	32	-		Cylindrical roller bearings
SB.RO220300.	CBK155	220	300,00	38	-		Cylindrical roller bearings
SB.RO220350.	CBK181	220	350,00	98,43	-		Cylindrical roller bearings
SB.RO280400.	CBK437	280	400,00	142,5	-		Cylindrical roller bearings
SB.RO303150.	CBK041	303	150,00	225	-		Cylindrical roller bearings
SB.RO320400.	CBK156	320	400,00	38	-		Cylindrical roller bearings
SB.RO320480.	CBK048	320	480,00	88	-		Cylindrical roller bearings
SB.RO340460.1	CBK426	340	460,00	118	-		Cylindrical roller bearings
SB.RO340460.2	CBK427	340	460,00	118	-		Cylindrical roller bearings
SB.RO340530.	CBK377	340	530,00	133,25	-		Cylindrical roller bearings
SB.RO390505.	CBK013	390	505,00	450	-		Cylindrical roller bearings
SB.RO400560.	CBK174	400	560,00	210	-		Cylindrical roller bearings
SB.RO440600.	WP-019	440	600,00	95	-		Cylindrical roller bearings
SB.RO457,2685.	CBK111	457,2	685,80	88,9	-		Cylindrical roller bearings
SB.RO500620.	T-WP2-018	500	620,00	120	-		Cylindrical roller bearings
SB.RO530710.	CBK376	530	710,00	180	-		Cylindrical roller bearings
Needle roller bearings							
SB.NE1016.	CBK163	10	16,00	10,2	-		Needle roller bearings
SB.NE11,639,6.	CBK076	11,6	39,64	-	-		Needle roller bearings
SB.NE14,723,8.	CBK077	14,733	23,84	13,1	-		Needle roller bearings
SB.NE16,330.	CBK480	16,3	30,00	21	-		Needle roller bearings
SB.NE1730.	CBK521	17	30,00	22,5	-		Needle roller bearings
SB.NE19,325,3.	CBK112	19,3	25,30	-	-		Needle roller bearings
SB.NE2332.	-	23	32,00	-	-		Needle roller bearings

- warehouse - order - phone





Clutch bearing



Wheel hub bearing

Bearing No.	Equivalent	Dimensions [mm]				Basic makes*	Bearing type
		d	D	B	L	-	
SB.NE2552.	-	25	52,00	-	-		Needle roller bearings
SB.NE2740.	CBK180	27,004	40,00	30,2	-		Needle roller bearings
SB.NE27,540.	373-750	27,5	40,00	132	-		Needle roller bearings
SB.NE28,644.	CBK202	28,608	44,00	36,2	-		Needle roller bearings
SB.NE5078.	CBK133	50	78,00	38	-		Needle roller bearings
SB.NE6585.	CBK020	65	85,00	70	-		Needle roller bearings
SB.NE100180.	CBK100	100	180,00	-	-		Needle roller bearings
Spherical roller bearings							
SB.SR75186,3.	CBK219	75	186,30	62	-		Spherical roller bearings
SB.SR190380.	CBK310	190	380,00	126	-		Spherical roller bearings
Thrust ball bearings							
SB.TB09,526,7.1	CBK283	9,52	26,72	9,25	-		Thrust ball bearings
SB.TB09,526,7.2	CBK283Z	9,52	26,72	-	-		Thrust ball bearings
SB.TB1242.	CBK066	12	42,00	33	-		Thrust ball bearings
SB.TB12,732,3.1	CBK284	12,7	32,28	11,25	-		Thrust ball bearings
SB.TB12,732,3.2	CBK284Z	12,7	32,28	-	-		Thrust ball bearings
SB.TB14,236,6.	CBK311	14,15	36,60	-	-		Thrust ball bearings
SB.TB16,226,5.	CBK137	16,2	26,50	-	-		Thrust ball bearings
SB.TB19,142,2.1	CBK285	19,05	42,19	14,02	-		Thrust ball bearings
SB.TB19,142,2.2	CBK285Z	19,05	42,19	-	-		Thrust ball bearings
SB.TB19,241,5.	CBK345	19,228	41,53	-	-		Thrust ball bearings
SB.TB2546.	CBK438	25	46,00	19,144	-		Thrust ball bearings
SB.TB25,149,5.	512Z25.1	25,1	49,50	15,875	-		Thrust ball bearings
SB.TB26,268.	CBK074	26,2	68,00	-	-		Thrust ball bearings
SB.TB26,246,6.	CBK353	26,24	46,58	-	-		Thrust ball bearings
SB.TB38,466.	CBK287A	38,35	66,00	-	-		Thrust ball bearings
SB.TB4575,5.1	512Z45	45	75,50	20,7	-		Thrust ball bearings
SB.TB4575,5.2	512Z45V	45	75,50	20,7	-		Thrust ball bearings
SB.TB52,484,5.	CBK161	52,388	84,50	19,238	-		Thrust ball bearings
SB.TB6295.	CBK109	62	95,00	39	-		Thrust ball bearings
SB.TB70105.	CBK108	70	105,00	32,7	-		Thrust ball bearings
SB.TB78110.	CBK110	78	110,00	38,5	-		Thrust ball bearings
SB.TB90145.	CBK068	90	145,00	47	-		Thrust ball bearings
SB.TB110230.	CBK011	110	230,00	102	-		Thrust ball bearings
SB.TB110260.	CBK034	110	260,00	115	-		Thrust ball bearings
SB.XX220300.	CBK099	220	300,00	35	-		Thrust ball bearings
SB.TB330410.	CBK162	330	410,00	56	-		Thrust ball bearings
SB.TB400560.	KW-027	400	560,00	110	-		Thrust ball bearings
SB.TB433520.	CBK366	433	520,00	60	-		Thrust ball bearings
SB.TB482,6584.	CBK314	482,6	584,20	88,9	-		Thrust ball bearings
SB.TB500600.	KW2-016	500	600,00	102	-		Thrust ball bearings
SB.TB550650.	CBK098	550	650,00	50	-		Thrust ball bearings
SB.TB585680.	CBK154	585	680,00	60	-		Thrust ball bearings
SB.TB600710.	CBK365	600	710,00	67	-		Thrust ball bearings
SB.TB7101100.	CBK211	710	1100,00	110	-		Thrust ball bearings
SB.TB730865.1	CBK165A	730	865,00	90	-		Thrust ball bearings
SB.TB730865.2	CBK165M	730	865,00	90	-		Thrust ball bearings
SB.TB740980.	CBK164	740	980,00	117	-		Thrust ball bearings
Cylindrical thrust roller bearings							
SB.RO3568.	CBK352	35	68,00	-	-		Cylindrical thrust roller bearings
SB.RO140220.	CBK410	140	220,00	42	-		Cylindrical thrust roller bearings
SB.RO260540.	248-752MA	260	540,00	132	-		Cylindrical thrust roller bearings
SB.RO365435.	CBK246	365	435,00	48	-		Cylindrical thrust roller bearings
SB.RO455555.	CBK251	455	555,00	65	-		Cylindrical thrust roller bearings
SB.RO460540.	CBK250	460	540,00	54	-		Cylindrical thrust roller bearings
SB.RO527635.	CBK309	527	635,00	49	-		Cylindrical thrust roller bearings

* Other products also available

https://nppnovoteh.com

21.1 SPECIAL BEARINGS



Cardan joint



Water pump bearing

Bearing No.	Equivalent	Dimensions [mm]				Basic makes*	Bearing type
		d	D	B	L	-	
SB.RO670780.	CBK252	670	780,00	75	-		Cylindrical thrust roller bearings
SB.RO710950.	597/710	710	950,00	290	-		Cylindrical thrust roller bearings
SB.RO9051025.	CBK253	905	1025,00	82	-		Cylindrical thrust roller bearings
SB.RO21002290.	CBK203	2100	2290,00	115	-		Cylindrical thrust roller bearings
Cardan joint							
SB.CA1640.	-	-	16,00	-	40		Cardan joint
SB.CA1847.	-	-	18,00	-	47		Cardan joint
SB.CA1952.	-	-	19,00	-	52		Cardan joint
SB.CA2044.	-	-	20,00	-	44		Cardan joint
SB.CA2250,2.	-	-	22,00	-	50,2		Cardan joint
SB.CA2254,8.	-	-	22,00	-	54,8		Cardan joint
SB.CA2254.	-	-	22,00	-	54		Cardan joint
SB.CA2255.	-	-	22,00	-	55		Cardan joint
SB.CA2257.	-	-	22,00	-	57		Cardan joint
SB.CA2259.	-	-	22,00	-	59		Cardan joint
SB.CA2263,9.	-	-	22,00	-	63,9		Cardan joint
SB.CA2267,1.	-	-	22,00	-	67,1		Cardan joint
SB.CA2461.	-	-	24,00	-	61		Cardan joint
SB.CA2461,3.	-	-	24,00	-	61,3		Cardan joint
SB.CA2462.	-	-	24,00	-	62		Cardan joint
SB.CA2462,5.	-	-	24,00	-	62,5		Cardan joint
SB.CA2475.	-	-	24,00	-	75		Cardan joint
SB.CA2439,3/59.	-	-	24,00	-	39,3/59		Cardan joint
SB.CA25,443,7/65.	-	-	25,40	-	43,7/65		Cardan joint
SB.CA2672.	-	-	26,00	-	72		Cardan joint
SB.CA2669,8.	-	-	26,00	-	69,8		Cardan joint
SB.CA2774,6.	-	-	27,00	-	74,6		Cardan joint
SB.CA2775.	-	-	27,00	-	75		Cardan joint
SB.CA2781,7.	-	-	27,00	-	81,7		Cardan joint
SB.CA2782.	-	-	27,00	-	82		Cardan joint
SB.CA2871.	-	-	28,00	-	71		Cardan joint
SB.CA2875,5.	-	-	28,00	-	75,5		Cardan joint
SB.CA3075.	-	-	30,00	-	75		Cardan joint
SB.CA3082.	-	-	30,00	-	82		Cardan joint
SB.CA3088.	-	-	30,00	-	88		Cardan joint
SB.CA3090.	-	-	30,00	-	90		Cardan joint
SB.CA3091,5.	-	-	30,00	-	91,5		Cardan joint
SB.CA3092.	-	-	30,00	-	92		Cardan joint
SB.CA30108.	-	-	30,00	-	108		Cardan joint
SB.CA3042/75.	-	-	30,00	-	42/75		Cardan joint
SB.CA3055/88	-	-	30,00	-	55/88		Cardan joint
SB.CA30,282.	-	-	30,20	-	82		Cardan joint
SB.CA30,292.	-	-	30,20	-	92		Cardan joint
SB.CA30,2106,3	-	-	30,20	-	106,3		Cardan joint
SB.CA3187.	-	-	31,00	-	87		Cardan joint
SB.CA3148/75,5	-	-	31,00	-	48/75,8		Cardan joint
SB.CA3276.	-	-	32,00	-	76		Cardan joint
SB.CA3290,5.	-	-	32,00	-	90,5		Cardan joint
SB.CA34,9106,4.	-	-	34,90	-	106,4		Cardan joint
SB.CA3590.	-	-	35,00	-	90		Cardan joint
SB.CA3596,8.	-	-	35,00	-	96,8		Cardan joint
SB.CA3597,5.	-	-	35,00	-	97,5		Cardan joint
SB.CA3598.	-	-	35,00	-	98		Cardan joint
SB.CA3689.	-	-	36,00	-	89		Cardan joint
SB.CA38107.	-	-	38,00	-	107		Cardan joint
SB.CA38103.	-	-	38,00	-	103		Cardan joint

- warehouse - order - phone



Clutch bearing



Wheel hub bearing

Bearing No.	Equivalent	Dimensions [mm]				Basic makes*	Bearing type
		d	D	B	L	-	
SB.CA38105,8.	-	-	38,00	-	105,8		Cardan joint
SB.CA38106,6.	-	-	38,00	-	106,6		Cardan joint
SB.CA38111,6.	-	-	38,00	-	111,6		Cardan joint
SB.CA3862/100.	-	-	38,00	-	62/100		Cardan joint
SB.CA39116,4.	-	-	39,00	-	116,4		Cardan joint
SB.CA39,7115,9.	-	-	39,70	-	115,9		Cardan joint
SB.CA40110.	-	-	40,00	-	110		Cardan joint
SB.CA40115.	-	-	40,00	-	115		Cardan joint
SB.CA42104,5.	-	-	42,00	-	104,5		Cardan joint
SB.CA42106.	-	-	42,00	-	106		Cardan joint
SB.CA42119,4.	-	-	42,00	-	119,4		Cardan joint
SB.CA44121,6.	-	-	44,00	-	121,6		Cardan joint
SB.CA44124,8.	-	-	44,00	-	124,8		Cardan joint
SB.CA44149.	-	-	44,00	-	149		Cardan joint
SB.CA45126,2.	-	-	45,00	-	126,2		Cardan joint
SB.CA47132.	-	-	47,00	-	132		Cardan joint
SB.CA47156.	-	-	47,00	-	156		Cardan joint
SB.CA47,6135.	-	-	47,60	-	135		Cardan joint
SB.CA48116,5.	-	-	48,00	-	116,5		Cardan joint
SB.CA48126.	-	-	48,00	-	126		Cardan joint
SB.CA49135.	-	-	49,00	-	135		Cardan joint
SB.CA49155.	-	-	49,00	-	155		Cardan joint
SB.CA49,2154,7.	-	-	49,20	-	154,7		Cardan joint
SB.CA50131.	-	-	50,00	-	131		Cardan joint
SB.CA50138.	-	-	50,00	-	138		Cardan joint
SB.CA50144.	-	-	50,00	-	144		Cardan joint
SB.CA50149.	-	-	50,00	-	149		Cardan joint
SB.CA50152.	-	-	50,00	-	152		Cardan joint
SB.CA50152,6.	-	-	50,00	-	152,6		Cardan joint
SB.CA52133.	-	-	52,00	-	133		Cardan joint
SB.CA52147,2.	-	-	52,00	-	147,2		Cardan joint
SB.CA52154.	-	-	52,00	-	154		Cardan joint
SB.CA53135.	-	-	53,00	-	135		Cardan joint
SB.CA55164.	-	-	55,00	-	164		Cardan joint
SB.CA57152.	-	-	57,00	-	152		Cardan joint
SB.CA57152,6.	-	-	57,00	-	152,6		Cardan joint
SB.CA57164.	-	-	57,00	-	164		Cardan joint
SB.CA57172.	-	-	57,00	-	172		Cardan joint
Rollers							
SB.RT105005.	CBK277	10	50,00	19	-		Rollers
SB.RT1256.	CBK190V	12	56,00	42	-		Rollers
SB.RT1275.1	CBK192V	12	75,00	59	-		Rollers
SB.RT1275.2	CBK313V	12	75,00	72	-		Rollers
SB.RT12,271,4.3	CBK276	12,2	71,40	52	-		Rollers
SB.RT12,271,4.1	124-659DV-2Z	12,2	71,40	55,5	-		Rollers
SB.RT12,271,4.2	124-662DV-2Z	12,2	71,40	71	-		Rollers
SB.RT13,120.	CBK419	13,1	20,00	14	-		Rollers
SB.RT1449,9.1	CBK194	14	49,90	18	-		Rollers
SB.RT1449,9.2	CBK194V	14	49,90	18	-		Rollers
SB.RT14,163.1	CBK191	14,05	63,00	34,5	-		Rollers
SB.RT14,163.2	CBK191V	14,05	63,00	34,5	-		Rollers
SB.RT15,525.	CBK500	15,54	24,98	13,1	-		Rollers
SB.RT1652.	CBK320	16	52,00	30,6	-		Rollers
SB.RT1659.1	CBK274B	16	59,00	19	-		Rollers
SB.RT1659.2	CBK274C	16	59,00	19	-		Rollers
SB.RT16,176.1	CBK196	16,05	76,00	39	-		Rollers

* Other products also available

21.1 SPECIAL BEARINGS



Cardan joint



Water pump bearing

Bearing No.	Equivalent	Dimensions [mm]				Basic makes*	Bearing type
		d	D	B	L	-	
SB.RT16,176.2	CBK196V	16,05	76,00	39	-		Rollers
SB.RT1935.	XN002/M1	19	35,00	18	-		Rollers
SB.RT2079,9.1	CBK188	20	79,85	27	-		Rollers
SB.RT2079,9.2	CBK188VA	20	79,85	27	-		Rollers
SB.RT2080.1	CBK101	20	80,00	27	-		Rollers
SB.RT2080.2	CBK116	20	80,00	27	-		Rollers
SB.RT2080.3	CBK117	20	80,00	27	-		Rollers
SB.RT2080.4	CBK131	20	80,00	27	-		Rollers
SB.RT2380.	CBK131/23	23	80,00	27	-		Rollers
SB.RT2381,9.1	CBK189	23	81,85	24	-		Rollers
SB.RT2381,9.2	CBK189V	23	81,85	24,5	-		Rollers
SB.RT2383.	CBK131/83	23	83,00	27	-		Rollers
SB.RT25,482,5.1	CBK243B	25,4	82,50	27	-		Rollers
SB.RT25,482,5.2	CBK243C	25,4	82,50	27	-		Rollers
SB.RT25,4125,4.	CBK275	25,4	125,40	33,3	-		Rollers
SB.RT28134.1	CBK195	28	134,00	30	-		Rollers
SB.RT28134.2	CBK195V	28	134,00	30	-		Rollers
SB.RT3084.	CBK468	30	84,00	27,3	-		Rollers
SB.RT35101,7.	CBK440	35	101,68	28,8	-		Rollers
Cruciform cylindrical roller bearings							
SB.RO250365.	PLC911-3	250	365,00	37	-		Cruciform cylindrical roller bearings
SB.RO300475.	PLC912-18-1	300	475,00	85	-		Cruciform cylindrical roller bearings
SB.RO300480.	PLC912-18	300	480,00	85	-		Cruciform cylindrical roller bearings
SB.RO340550.	PLC912-28	340	550,00	90	-		Cruciform cylindrical roller bearings
SB.RO350868,5.	PLC912-25-1	350	868,47	177	-		Cruciform cylindrical roller bearings
SB.RO640868.	PLC912-38	640	868,00	97	-		Cruciform cylindrical roller bearings
SB.RO6401082,5.	PLC912-45	640	1082,45	192	-		Cruciform cylindrical roller bearings
SB.RO715935.	PLC912-15-1	715	935,00	100	-		Cruciform cylindrical roller bearings
SB.RO715979.1	PLC912-15	715	979,00	100	-		Cruciform cylindrical roller bearings
SB.RO715979.2	PLC912-37	715	979,00	100	-		Cruciform cylindrical roller bearings
SB.RO715979.3	PLC912-41	715	979,00	100	-		Cruciform cylindrical roller bearings
SB.RO7801340,5.	PLC912-23-1	780	1340,50	215	-		Cruciform cylindrical roller bearings
SB.RO8681144.1	CBK422	868	1144,00	100	-		Cruciform cylindrical roller bearings
SB.RO8681144.2	PLC912-16	868	1144,00	100	-		Cruciform cylindrical roller bearings
SB.RO8681144.3	PLC912-16-1	868	1144,00	100	-		Cruciform cylindrical roller bearings
SB.RO8801220.	PLC912-21	880	1220,00	120	-		Cruciform cylindrical roller bearings
SB.RO9631365.	PLC912-30	963	1365,00	170	-		Cruciform cylindrical roller bearings
SB.RO9701344.	PLC912-47	970	1344,00	120	-		Cruciform cylindrical roller bearings
SB.RO9741365.	PLC912-30-1	974	1365,00	180	-		Cruciform cylindrical roller bearings
SB.RO11601600.	PLC912-29	1160	1600,00	200	-		Cruciform cylindrical roller bearings
SB.RO11771600.	PLC912-29-1	1177	1600,00	200	-		Cruciform cylindrical roller bearings
SB.RO12311600.	PLC912-52	1231	1600,00	95	-		Cruciform cylindrical roller bearings
SB.RO12701620.1	PLC912-22	1270	1620,00	135	-		Cruciform cylindrical roller bearings
SB.RO12701620.2	PLC912-36	1270	1620,00	135	-		Cruciform cylindrical roller bearings
SB.RO14301800.	PLC912-26-1	1430	1800,00	141	-		Cruciform cylindrical roller bearings
SB.RO14301808.	PLC912-26	1430	1808,00	141	-		Cruciform cylindrical roller bearings
SB.RO14951792.	PLC912-48	1495	1792,00	118,4	-		Cruciform cylindrical roller bearings
SB.RO16102025.	PLC912-39	1610	2025,00	150	-		Cruciform cylindrical roller bearings
SB.RO16102030.	PLC912-24	1610	2030,00	150	-		Cruciform cylindrical roller bearings
SB.RO17762195.	PLC912-27	1776	2195,00	180	-		Cruciform cylindrical roller bearings
SB.RO20952420.	PLC912-55	2095	2420,00	135	-		Cruciform cylindrical roller bearings
SB.RO23752801.	CBK420	2375	2801,70	121	-		Cruciform cylindrical roller bearings
SB.RO29303440.	CBK421	2930	3440,00	164	-		Cruciform cylindrical roller bearings

- warehouse - order - phone * Other products also available

https://nppnovoteh.com



22. CROSS LIST GOST

ROLLING BEARINGS





22. CROSS LIST GOST

Bearing No.	Equivalent	Dimensions [mm]			Weight [kg]	Bearing type
		d	D	B		
100.	6000	10	26	8	0,019	single-row deep groove ball bearings
1000084.	618/4	4	9	2,25	0,008	single-row deep groove ball bearings
1000085.	618/5	5	11	3	0,001	single-row deep groove ball bearings
1000088.	618/8	8	16	4	0,003	single-row deep groove ball bearings
1000091.	619/1	1	4	1,6	0,0001	single-row deep groove ball bearings
1000092.	619/2	2	6	2,3	0,0004	single-row deep groove ball bearings
1000093.	619/3	3	8	3	0,0007	single-row deep groove ball bearings
1000094.	619/4	4	11	4	0,002	single-row deep groove ball bearings
1000095.	619/5	5	13	4	0,002	single-row deep groove ball bearings
1000096.	619/6	6	15	5	0,004	single-row deep groove ball bearings
1000097.	619/7	7	17	5	0,005	single-row deep groove ball bearings
1000098.	619/8	8	19	6	0,008	single-row deep groove ball bearings
1000099.	619/9	9	20	6	0,008	single-row deep groove ball bearings
1000800.	61800	10	19	5	0,005	single-row deep groove ball bearings
1000801.	61800	12	21	5	0,007	single-row deep groove ball bearings
1000802.	61802	15	24	5	0,008	single-row deep groove ball bearings
1000804.	61804	20	32	7	0,018	single-row deep groove ball bearings
1000805.	61805	25	37	7	0,02	single-row deep groove ball bearings
1000806.	61806	30	42	7	0,03	single-row deep groove ball bearings
1000807.	61807	35	47	7	0,03	single-row deep groove ball bearings
1000812.	61812	60	78	10	0,127	single-row deep groove ball bearings
1000813.	61813	65	85	10	0,13	single-row deep groove ball bearings
1000814.	61814	70	90	10	0,18	single-row deep groove ball bearings
1000816.	61816	80	100	10	0,22	single-row deep groove ball bearings
1000817.	61817	85	110	13	0,27	single-row deep groove ball bearings
1000818.	61818	90	115	13	0,33	single-row deep groove ball bearings
1000819.	61819	95	120	13	0,31	single-row deep groove ball bearings
1000821.	61821	105	130	13	0,45	single-row deep groove ball bearings
1000822.	61822	110	140	16	0,54	single-row deep groove ball bearings
1000824.	61824	120	150	16	0,7	single-row deep groove ball bearings
1000828.	61828	140	175	18	1,08	single-row deep groove ball bearings
1000830.	61830	150	190	20	1,46	single-row deep groove ball bearings
1000832.	61832	160	200	20	1,49	single-row deep groove ball bearings
1000834.	61834	170	215	22	2	single-row deep groove ball bearings
1000836.	61836	180	225	22	2,03	single-row deep groove ball bearings
1000840.	61840	200	250	24	2,7	single-row deep groove ball bearings
1000844.	61844	220	270	24	2,9	single-row deep groove ball bearings
1000848.	61848	240	300	28	4,5	single-row deep groove ball bearings
1000856.	61856	280	350	33	9,5	single-row deep groove ball bearings
1000864.	61864	320	400	38	11,8	single-row deep groove ball bearings
1000868.	61868	340	420	38	12,32	single-row deep groove ball bearings
1000872.	61872	360	440	38	17,14	single-row deep groove ball bearings
1000876.	61876	380	480	46	20,1	single-row deep groove ball bearings
1000892.	61892	460	580	56	36,3	single-row deep groove ball bearings
1000896.	61896	480	600	56	36,5	single-row deep groove ball bearings
1000900.	61900	10	22	6	0,009	single-row deep groove ball bearings
1000901.	61901	12	24	6	0,01	single-row deep groove ball bearings
1000902.	61902	15	28	7	0,017	single-row deep groove ball bearings
1000903.	61903	17	30	7	0,018	single-row deep groove ball bearings
1000904.	61904	20	37	9	0,035	single-row deep groove ball bearings
1000905.	61905	25	42	9	0,042	single-row deep groove ball bearings
1000906.	61906	30	47	9	0,049	single-row deep groove ball bearings
1000907.	61907	35	55	10	0,086	single-row deep groove ball bearings
1000908.	61908	40	62	12	0,11	single-row deep groove ball bearings
1000909.	61909	45	68	12	0,15	single-row deep groove ball bearings
1000911.	61911	55	80	13	0,19	single-row deep groove ball bearings
1000912.	61912	60	85	13	0,26	single-row deep groove ball bearings
1000913.	61913	65	90	13	0,25	single-row deep groove ball bearings
1000915.	61915	75	105	16	0,38	single-row deep groove ball bearings
1000916.	61916	80	110	16	0,43	single-row deep groove ball bearings
1000917.	61917	85	120	18	0,7	single-row deep groove ball bearings
1000918.	61918	90	125	18	0,72	single-row deep groove ball bearings
1000919.	61919	95	130	18	0,76	single-row deep groove ball bearings
1000920.	61920	100	140	20	1,02	single-row deep groove ball bearings
1000921.	61921	105	145	20	1,02	single-row deep groove ball bearings
1000922.	61922	110	150	20	1,1	single-row deep groove ball bearings
1000924.	61924	120	165	22	1,4	single-row deep groove ball bearings
1000926.	61926	130	180	24	1,84	single-row deep groove ball bearings
1000928.	61928	140	190	24	2,16	single-row deep groove ball bearings
1000930.	61930	150	210	28	2,9	single-row deep groove ball bearings
1000932.	61932	160	220	28	3,1	single-row deep groove ball bearings
1000934.	61934	170	230	28	3,2	single-row deep groove ball bearings
1000940.	61940	200	280	38	7,7	single-row deep groove ball bearings
1000944.	61944	220	300	38	8,1	single-row deep groove ball bearings
1000948.	61948	240	320	38	9,6	single-row deep groove ball bearings

https://nppnovoteh.com

22. CROSS LIST GOST

Bearing No.	Equivalent	Dimensions [mm]			Weight [kg]	Bearing type
		d	D	B		
1000952.	61952	260	360	46	14,7	single-row deep groove ball bearings
1000956.	61956	280	380	46	15	single-row deep groove ball bearings
1000964.	61964	320	440	56	23	single-row deep groove ball bearings
1000968.	61968	340	460	56	27	single-row deep groove ball bearings
1002912.		60	85	13	0,25	single-row cylindrical roller bearings
1002916.		80	110	16	0,47	single-row cylindrical roller bearings
1002926.		130	180	24	2,05	single-row cylindrical roller bearings
1002932.		160	220	28	3,34	single-row cylindrical roller bearings
100301.		12	37	12	0,071	single-row deep groove ball bearings
1005.	135	5	19	6	0,009	self-aligning ball bearings
1006.	126	6	19	6	0,009	self-aligning ball bearings
1006094.		4	11	4	0,002	angular-contact radial ball bearings
1006095.		5	13	4	0,003	angular-contact radial ball bearings
1006096.		6	15	5	0,004	angular-contact radial ball bearings
1007.	127	7	22	7	0,014	self-aligning ball bearings
100700.		10	30	6	0,025	single-row deep groove ball bearings
100704.		20	42	9	0,051	single-row deep groove ball bearings
100720.		100	180	28	2,83	single-row deep groove ball bearings
100752.		260	370	35	13,6	single-row deep groove ball bearings
10078/850.		850	1030	82	77	tapered roller bearings
10079/1800.		1800	2300	218	2306	tapered roller bearings
10079/500.		500	670	78	76	tapered roller bearings
10079/530.		530	710	82	89,4	tapered roller bearings
10079/560.		560	750	85	104	tapered roller bearings
10079/630.		630	850	100	164	tapered roller bearings
10079/710.		710	950	106	210,1	tapered roller bearings
10079/900.		900	1180	122	330	tapered roller bearings
1007976.		380	520	65	40,8	tapered roller bearings
1007992.		460	620	74	61,2	tapered roller bearings
1007996.		480	650	78	71	tapered roller bearings
1008.	108	8	22	7	0,014	self-aligning ball bearings
1009.	129	9	26	8	0,022	self-aligning ball bearings
101.	6001	12	28	8	0,022	single-row deep groove ball bearings
102.	6002	15	32	9	0,03	single-row deep groove ball bearings
102205.		25	52	15	0,14	single-row cylindrical roller bearings
102206.		30	62	16	0,23	single-row cylindrical roller bearings
102208.		40	80	18	0,42	single-row cylindrical roller bearings
102209.		45	85	19	0,49	single-row cylindrical roller bearings
102210.		50	90	20	0,53	single-row cylindrical roller bearings
102211.		55	100	21	0,71	single-row cylindrical roller bearings
102212.		60	110	22	0,83	single-row cylindrical roller bearings
102304.		20	52	15	0,17	single-row cylindrical roller bearings
102305.		25	62	17	0,26	single-row cylindrical roller bearings
102307.		35	80	21	0,52	single-row cylindrical roller bearings
102308.		40	90	23	0,7	single-row cylindrical roller bearings
102309.		45	100	25	0,96	single-row cylindrical roller bearings
102310.		50	110	27	1,24	single-row cylindrical roller bearings
102312.		60	130	31	2,05	single-row cylindrical roller bearings
102313.		65	140	33	2,4	single-row cylindrical roller bearings
102314.		70	150	35	2,97	single-row cylindrical roller bearings
102316.		80	170	39	4,09	single-row cylindrical roller bearings
102407.		35	100	25	1,11	single-row cylindrical roller bearings
102408.		40	110	27	1,36	single-row cylindrical roller bearings
102409.		45	120	29	1,77	single-row cylindrical roller bearings
102410.		50	130	31	2,19	single-row cylindrical roller bearings
102416.		80	200	48	7,76	single-row cylindrical roller bearings
102506.		30	62	20	0,29	single-row cylindrical roller bearings
102605.		25	62	24	0,36	single-row cylindrical roller bearings
102606.		30	72	27	0,56	single-row cylindrical roller bearings
102618.		90	190	64	8,83	single-row cylindrical roller bearings
1027305.		25	62	17	0,29	tapered roller bearings
1027307.		35	80	21	0,53	tapered roller bearings
1027314.	31314	70	150	35	3	tapered roller bearings
1027320.	31320	100	215	51	8,8	tapered roller bearings
1027324.	31324	120	260	62	15,4	tapered roller bearings
1027328.	31328	140	300	70	23	tapered roller bearings
1027336.	31336	180	380	88	46	tapered roller bearings
1027340.	31340	200	420	97	63	tapered roller bearings
102805.		25	52	15	0,18	single-row cylindrical roller bearings
103.	6003	17	35	10	0,04	single-row deep groove ball bearings
1032724.		120	200	38	5,25	single-row cylindrical roller bearings
1032752.		260	440	82	50,6	single-row cylindrical roller bearings
1032868.		340	420	38	12,3	single-row cylindrical roller bearings
1032880.		400	540	65	42,5	single-row cylindrical roller bearings
1032920.		100	140	20	0,88	single-row cylindrical roller bearings

Bearing No.	Equivalent	Dimensions [mm]			Weight [kg]	Bearing type
		d	D	B		
1032924.		120	165	22	1,26	single-row cylindrical roller bearings
1032928.		140	190	24	1,46	single-row cylindrical roller bearings
1032930.		150	210	28	2,8	single-row cylindrical roller bearings
1032948.		240	320	38	8,37	single-row cylindrical roller bearings
1032952.		260	360	46	14,5	single-row cylindrical roller bearings
1032956.		280	380	46	16	single-row cylindrical roller bearings
1032964.		320	440	56	26,3	single-row cylindrical roller bearings
1032980.		400	540	65	42,5	single-row cylindrical roller bearings
104.	6004	20	42	12	0,7	single-row deep groove ball bearings
105.	6005	25	47	12	0,08	single-row deep groove ball bearings
106.	6006	30	55	13	0,12	single-row deep groove ball bearings
107.	6007	35	62	14	0,16	single-row deep groove ball bearings
1077284.		420	760	240	1057	four-row tapered roller bearings
10777/500.		500	830	272	1264	four-row tapered roller bearings
10777/560.		560	920	300	1602	four-row tapered roller bearings
10777/670.		670	1090	342	2573	four-row tapered roller bearings
10777/750.		750	1220	405	3907	four-row tapered roller bearings
10777/850.		850	1360	440	5218	four-row tapered roller bearings
1077756.		280	460	154	193	four-row tapered roller bearings
1077776.		380	620	200	515	four-row tapered roller bearings
1077792.		460	760	250	1061	four-row tapered roller bearings
1077796.		480	790	256	1074	four-row tapered roller bearings
1077988.		440	600	151	253	four-row tapered roller bearings
1077996.		480	650	159	304	four-row tapered roller bearings
108.	6008	40	68	15	0,19	single-row deep groove ball bearings
1080095.		5	13	4	0,002	single-row deep groove ball bearings
1080097.		7	17	5	0,005	single-row deep groove ball bearings
108615.		75	120	30	1,17	thrust ball bearings in housings
108710.		50	80,5	22,8	0,4	thrust ball bearings in housings
108714.		70	130	41	2,13	thrust ball bearings in housings
108804.		20	37	11	0,05	thrust ball bearings in housings
108806.		30,1	53	16	0,13	thrust ball bearings in housings
108810.		50	87,5	32	1	thrust ball bearings in housings
108904.		20,88	42,5	13,5	0,09	thrust ball bearings in housings
108905.		25,1	51	15,87	0,14	thrust ball bearings in housings
108906.		27,1	51	15,87	0,13	thrust ball bearings in housings
109.	6009	45	75	16	0,25	single-row deep groove ball bearings
1097760.		300	500	90	142	double-row tapered roller bearings
1097768.		340	580	106	221	double-row tapered roller bearings
1097776.		380	620	106	240	double-row tapered roller bearings
1097780.		400	650	112	306	double-row tapered roller bearings
1097784.		420	700	122	400	double-row tapered roller bearings
10979/500.		500	670	78	166	double-row tapered roller bearings
10979/530.		530	710	82	193	double-row tapered roller bearings
10979/560.		560	750	85	237	double-row tapered roller bearings
10979/600.		600	800	90	283	double-row tapered roller bearings
10979/630.		630	850	100	361	double-row tapered roller bearings
10979/710.		710	950	106	415	double-row tapered roller bearings
10979/800.		800	1060	115	604	double-row tapered roller bearings
10979/850.		850	1120	118	650	double-row tapered roller bearings
10979/950.		950	1250	132	919	double-row tapered roller bearings
1097976.		380	520	65	84,4	double-row tapered roller bearings
1097980.		400	540	65	88,2	double-row tapered roller bearings
1097992.		460	620	74	131	double-row tapered roller bearings
1097996.		480	650	78	151	double-row tapered roller bearings
110.	6010	50	80	16	0,25	single-row deep groove ball bearings
1105.		25	47	12	0,089	self-aligning ball bearings
1106.		30	55	13	0,13	self-aligning ball bearings
111.	6011	55	90	18	0,39	single-row deep groove ball bearings
111205.	1205 K	25	52	15	0,14	self-aligning ball bearings
111206.	1206 K	30	62	16	0,22	self-aligning ball bearings
111207.	1207 K	35	72	17	0,32	self-aligning ball bearings
111208.	1208 K	40	80	18	0,42	self-aligning ball bearings
111209.	1209	45	85	19	0,47	self-aligning ball bearings
111210.	1210 K	50	90	20	0,53	self-aligning ball bearings
111211.	1211 K	55	100	21	0,71	self-aligning ball bearings
111212.	1212 K	60	110	22	0,88	self-aligning ball bearings
111213.	1213 K	65	120	23	1,15	self-aligning ball bearings
111215.	1215 K	75	130	25	1,36	self-aligning ball bearings
111216.	1216 K	80	140	26	1,67	self-aligning ball bearings
111217.	1217 K	85	150	28	2,1	self-aligning ball bearings
111218.	1218 K	90	160	30	2,5	self-aligning ball bearings
111219.	1219 K	95	170	32	3,1	self-aligning ball bearings
111220.	1220 K	100	180	34	3,7	self-aligning ball bearings
111222.	1222 K	110	200	38	5,2	self-aligning ball bearings

https://nppnovoteh.com

22. CROSS LIST GOST

Bearing No.	Equivalent	Dimensions [mm]			Weight [kg]	Bearing type
		d	D	B		
111316.	1316 K	80	170	39	4,3	self-aligning ball bearings
111318.	1318 K	90	190	43	5,7	self-aligning ball bearings
111320.	1320 K	100	215	47	8,3	self-aligning ball bearings
111322.	1322 K	110	240	50	12	self-aligning ball bearings
111506.	2206 K	30	62	20	0,26	self-aligning ball bearings
111507.	2207 K	35	72	23	0,4	self-aligning ball bearings
111606.	2306 K	30	72	27	0,5	self-aligning ball bearings
111607.	2307 K	35	80	31	0,68	self-aligning ball bearings
111608.	2308 K	40	90	33	0,93	self-aligning ball bearings
111610.	2310 K	50	110	40	1,61	self-aligning ball bearings
111612.	2312 K	60	130	46	2,6	self-aligning ball bearings
112.	6012	60	95	18	0,4	single-row deep groove ball bearings
11204.	1205 K + H204	25	52	15	0,21	self-aligning ball bearings
11205.	1206 K + H206	30	62	16	0,31	self-aligning ball bearings
11206.	1207 K + H207	35	72	17	0,45	self-aligning ball bearings
11207.	1208 K + H208	40	80	18	0,61	self-aligning ball bearings
11208.	1209 K + H209	45	85	19	0,71	self-aligning ball bearings
11209.	1210 K + H210	50	90	20	0,81	self-aligning ball bearings
11210.	1211 K + H211	55	100	21	1,04	self-aligning ball bearings
11211.	1212 K + H212	60	110	22	1,29	self-aligning ball bearings
11212.	1213 K + H213	65	120	23	1,61	self-aligning ball bearings
11213.	1215 K + H215	75	130	25	2,2	self-aligning ball bearings
11214.	1216 K + H216	80	140	26	2,7	self-aligning ball bearings
11215.	1217 K + H217	85	150	28	3,3	self-aligning ball bearings
11216.	1218 K + H218	90	160	30	3,9	self-aligning ball bearings
11217.	1219 K + H219	95	170	32	4,6	self-aligning ball bearings
11218.	1220 K + H220	100	180	34	5,5	self-aligning ball bearings
11220.	1222 K + H222	110	200	38	7,4	self-aligning ball bearings
112741.		205	280	32	5,6	single-row cylindrical roller bearings
113.	6013	65	100	18	0,45	single-row deep groove ball bearings
11305.	1306 K + H306	30	72	19	0,5	self-aligning ball bearings
11306.	2207 K + H307	35	80	21	0,67	self-aligning ball bearings
11308.	1309 K + H309	45	100	25	1,19	self-aligning ball bearings
11309.	1310 K + H310	50	110	27	1,49	self-aligning ball bearings
11310.	1311 K + H311	55	120	29	1,91	self-aligning ball bearings
11311.	1312 K + H312	60	130	31	2,3	self-aligning ball bearings
11312.	1313 K + H313	65	140	33	2,9	self-aligning ball bearings
11314.	1316 K + H316	80	170	39	5,2	self-aligning ball bearings
11315.	1315 K + H315	75	160	37	4,4	self-aligning ball bearings
11316.	1318 K + H318	90	190	43	7,1	self-aligning ball bearings
11318.	1320 K + H320	100	215	47	10	self-aligning ball bearings
11319.		100	225	49	12,9	self-aligning ball bearings
11320.		110	240	50	14,18	self-aligning ball bearings
113517.	22217 K	85	150	36	2,8	spherical roller bearings
113520.	22220 K	100	180	46	5,2	spherical roller bearings
113528.	22228 K	140	250	68	14,1	spherical roller bearings
113530.	22230 K	150	270	73	17,1	spherical roller bearings
113532.	22232 K	160	290	80	22	spherical roller bearings
113534.	22234 K	170	310	86	25,8	spherical roller bearings
113536.	22236 K	180	320	86	27,3	spherical roller bearings
113540.	22240 K	200	360	98	44,1	spherical roller bearings
113552.	22252 K	260	480	130	101	spherical roller bearings
113556.	22256 K	280	500	130	101	spherical roller bearings
113624.	22324 K	120	260	86	23,5	spherical roller bearings
113632.	22332 K	160	340	114	49	spherical roller bearings
113636.	22336 K	180	380	126	69,1	spherical roller bearings
113638.	22338 K	190	400	132	77,7	spherical roller bearings
113640.	22340 K	200	420	138	92	spherical roller bearings
113652.	22352 K	260	540	165	185	spherical roller bearings
113656.	22356 K	280	580	175	231	spherical roller bearings
114.	6014	70	110	20	0,6	single-row deep groove ball bearings
115.	6015	75	115	20	0,66	single-row deep groove ball bearings
11505.	2206 K + H306	25	62	20	0,35	self-aligning ball bearings
11505.	2206 K + H306	30	62	20	0,38	self-aligning ball bearings
11506.		35	72	23	0,56	self-aligning ball bearings
11508.	2209 K + H309	45	85	23	0,78	self-aligning ball bearings
11509.	2210 K + H310	50	90	23	0,88	self-aligning ball bearings
11510.	2211 K + H311	55	100	25	1,12	self-aligning ball bearings
116.	6016	80	125	22	0,85	single-row deep groove ball bearings
1160305.		25	62	21	0,28	single-row deep groove ball bearings
11606.	2307 K + H2307	35	80	31	0,86	self-aligning ball bearings
11609.	2310 K + H2310	50	110	40	2	self-aligning ball bearings
11611.	2312 K + H2312	60	130	46	3,1	self-aligning ball bearings
11612.	2313 K + H2313	65	140	48	3,7	self-aligning ball bearings
116126.		130	200	33	3,7	single-row angular-contact double-direction ball bearings

Bearing No.	Equivalent	Dimensions [mm]			Weight [kg]	Bearing type
		d	D	B		
116222.	Q222	110	200	38	4,87	single-row angular-contact double-direction ball bearings
117.	6017	85	130	22	0,91	single-row deep groove ball bearings
1176720.		100	165	30	2,7	single-row angular-contact double-direction ball bearings
1176724.		120	200	38	4,75	single-row angular-contact double-direction ball bearings
1176940.		200	280	38	6,86	single-row angular-contact double-direction ball bearings
117732.		160	227	48	9,6	closed tapered roller bearings
118.	6018	90	140	24	1,2	single-row deep groove ball bearings
1180304.		20	52	18	0,17	single-row deep groove ball bearings
1180305.		25	62	21	0,28	single-row deep groove ball bearings
119.	6019	95	145	24	1,6	single-row deep groove ball bearings
120.	6020	100	150	24	1,6	single-row deep groove ball bearings
1200.	1200	10	30	9	0,039	self-aligning ball bearings
1201.	1201	12	32	10	0,04	self-aligning ball bearings
1202.	1202	15	35	11	0,05	self-aligning ball bearings
1203.	1203	17	40	12	0,07	self-aligning ball bearings
1204.	1204	20	47	14	0,13	self-aligning ball bearings
1205.	1205	25	52	15	0,14	self-aligning ball bearings
1206.	1206	30	62	16	0,22	self-aligning ball bearings
1207.	1207	35	72	17	0,32	self-aligning ball bearings
1208.	1208	40	80	18	0,42	self-aligning ball bearings
121.	6021	105	160	26	1,8	single-row deep groove ball bearings
1210.	1210	50	90	20	0,53	self-aligning ball bearings
1211.	1211	55	100	21	0,71	self-aligning ball bearings
12115.		75	115	20	0,74	single-row cylindrical roller bearings
1212.	1212	60	110	22	0,88	self-aligning ball bearings
1213.	1213	65	120	23	1,15	self-aligning ball bearings
1214.	1214	70	125	24	1,26	self-aligning ball bearings
1215.	1215	75	130	25	1,36	self-aligning ball bearings
1216.	1216	80	140	26	1,67	self-aligning ball bearings
1217.	1217	85	150	28	2,1	self-aligning ball bearings
1218.	1218	90	160	30	2,5	self-aligning ball bearings
122.	6022	110	170	28	2	single-row deep groove ball bearings
1220.	1220	100	180	34	3,7	self-aligning ball bearings
12202.		15	35	11	0,05	single-row cylindrical roller bearings
12204.		20	47	14	0,13	single-row cylindrical roller bearings
12207.		35	72	17	0,35	single-row cylindrical roller bearings
12208.		40	80	18	0,4	single-row cylindrical roller bearings
1221.	1221	105	190	36	4,4	self-aligning ball bearings
12210.		50	90	20	0,57	single-row cylindrical roller bearings
12211.		55	100	21	0,76	single-row cylindrical roller bearings
12212.		60	110	22	0,95	single-row cylindrical roller bearings
12213.		65	120	23	1,2	single-row cylindrical roller bearings
12218.		90	160	38	2,8	single-row cylindrical roller bearings
12228.		140	250	42	9,6	single-row cylindrical roller bearings
1224.	1224	120	215	42	6,8	self-aligning ball bearings
122729.		145	180	18	1,06	single-row cylindrical roller bearings
12302.		15	42	13	0,11	single-row cylindrical roller bearings
12307.		35	80	21	0,55	single-row cylindrical roller bearings
12308.		40	90	23	0,78	single-row cylindrical roller bearings
12309.		45	100	25	1	single-row cylindrical roller bearings
12310.		50	110	27	1,35	single-row cylindrical roller bearings
12311.		55	120	29	1,7	single-row cylindrical roller bearings
12312.		60	130	31	2,1	single-row cylindrical roller bearings
12315.		75	160	37	3,52	single-row cylindrical roller bearings
12316.		80	170	39	4,45	single-row cylindrical roller bearings
12318.		90	190	43	6,1	single-row cylindrical roller bearings
12320.		100	215	47	9	single-row cylindrical roller bearings
1236918.		90	125	36	1,23	angular-contact radial ball bearings
124.	6024	120	180	28	2,05	single-row deep groove ball bearings
12416.		80	200	48	8,71	single-row cylindrical roller bearings
12418.		90	225	54	11,8	single-row cylindrical roller bearings
1246918.		90	125	54	1,85	angular-contact radial ball bearings
1246922.		110	150	40	1,68	angular-contact radial ball bearings
1246932.		160	220	84	8,68	angular-contact radial ball bearings
1246932.		160	220	56	5,34	angular-contact radial ball bearings
12507.		35	72	17	0,35	single-row cylindrical roller bearings
12514.		70	125	31	1,55	single-row cylindrical roller bearings
12526.		130	230	64	12	single-row cylindrical roller bearings
126.	6026	130	200	33	3,7	single-row deep groove ball bearings
12609.		45	100	36	1,38	single-row cylindrical roller bearings
12613.		65	140	48	3,65	single-row cylindrical roller bearings
126220.		100	180	34	3,9	single-row angular-contact double-direction ball bearings
126805.		25	62	17	0,27	single-row angular-contact double-direction ball bearings
12728.		140	215	45	6,5	single-row cylindrical roller bearings
12736.		180	280	55	12,7	single-row cylindrical roller bearings

https://nppnovoteh.com

22. CROSS LIST GOST

Bearing No.	Equivalent	Dimensions [mm]			Weight [kg]	Bearing type
		d	D	B		
12746.		230	370	70	26	single-row cylindrical roller bearings
127509.	32209	45	85	23,5	0,58	tapered roller bearings
128.	6028	140	210	33	3,53	single-row deep groove ball bearings
13.	603	3	9	3	0,001	single-row deep groove ball bearings
130.	6030	150	225	35	4,2	single-row deep groove ball bearings
1301.	1301	12	37	12	0,07	self-aligning ball bearings
1302.	1302	15	42	13	0,09	self-aligning ball bearings
1303.	1303	17	47	14	0,12	self-aligning ball bearings
1304.	1304	20	52	15	0,16	self-aligning ball bearings
1305.	1305	25	62	17	0,26	self-aligning ball bearings
1306.	1306	30	72	19	0,39	self-aligning ball bearings
1307.	1307	35	80	21	0,5	self-aligning ball bearings
1308.	1308	40	90	23	0,7	self-aligning ball bearings
1309.	1309	45	100	25	0,96	self-aligning ball bearings
1310.	1310	50	110	27	1,21	self-aligning ball bearings
1311.	1311	55	120	29	1,58	self-aligning ball bearings
1312.	1312	60	130	31	1,96	self-aligning ball bearings
1313.	1313	65	140	33	2,5	self-aligning ball bearings
1314.	1314	70	150	35	3	self-aligning ball bearings
1315.	1315	75	160	37	3,6	self-aligning ball bearings
1316.	1316	80	170	39	4,3	self-aligning ball bearings
1317.	1317	85	180	41	5,1	self-aligning ball bearings
1318.	1318	90	190	43	5,7	self-aligning ball bearings
132.	6032	160	240	38	6,4	single-row deep groove ball bearings
1320.	1320	100	215	47	8,3	self-aligning ball bearings
134.	6034	170	260	42	8,6	single-row deep groove ball bearings
134901.		12	18	12	0,01	needle roller bearings
134902.		15	21	12	0,011	needle roller bearings
13518.		90	180	46	6,7	spherical roller bearings
13520.		100	200	53	9,6	spherical roller bearings
13525.		125	250	68	18,8	spherical roller bearings
13528.		140	290	80	30	spherical roller bearings
13530.		150	310	86	35	spherical roller bearings
13532.		160	320	86	39	spherical roller bearings
13534.		170	340	92	46,3	spherical roller bearings
13536.		180	360	98	55,4	spherical roller bearings
13548.		240	480	130	125	spherical roller bearings
136.	6036	180	280	46	11	single-row deep groove ball bearings
13611.		55	130	46	3	spherical roller bearings
13620.		100	240	80	20,3	spherical roller bearings
13622.		110	260	86	26,7	spherical roller bearings
13628.		140	340	114	59,3	spherical roller bearings
13630.		150	360	120	69,2	spherical roller bearings
13632.		160	380	126	81	spherical roller bearings
13634.		170	400	132	92,4	spherical roller bearings
13636.		180	420	138	106,1	spherical roller bearings
138.	6038	190	290	46	11,4	single-row deep groove ball bearings
140.	6040	200	310	51	14,4	single-row deep groove ball bearings
1412.		60	150	35	3,28	self-aligning ball bearings
142220.		100	180	34	4	single-row cylindrical roller bearings
1436900.		10	22	12	0,021	angular-contact radial ball bearings
144.	6044	220	340	56	13,5	single-row deep groove ball bearings
148.	6048	240	360	56	22,4	single-row deep groove ball bearings
1500.	2200	10	30	14	0,04	self-aligning ball bearings
150106.		30	55	13	0,12	single-row deep groove ball bearings
150110.		50	80	16	0,26	single-row deep groove ball bearings
150200.	6200 ZNR	10	30	9	0,03	single-row deep groove ball bearings
150204.	6204 ZNR	20	47	14	0,1	single-row deep groove ball bearings
150206.	6206 ZNR	30	62	16	0,2	single-row deep groove ball bearings
150208.	6206 ZNR	40	80	18	0,37	single-row deep groove ball bearings
150210.	6210 ZNR	50	90	20	0,46	single-row deep groove ball bearings
150212.	6212 ZNR	60	110	22	0,8	single-row deep groove ball bearings
150217.	6217 ZNR	85	150	28	1,82	single-row deep groove ball bearings
150304.	6205 ZNR	20	52	17	0,14	single-row deep groove ball bearings
150307.	6307 ZNR	35	80	21	0,44	single-row deep groove ball bearings
150308.	6308 ZNR	40	90	23	0,66	single-row deep groove ball bearings
150309.	6309 ZNR	45	100	25	0,83	single-row deep groove ball bearings
150312.	6312 ZNR	60	130	31	1,7	single-row deep groove ball bearings
1504.	2204	20	47	18	0,14	self-aligning ball bearings
150409.		45	120	29	1,55	single-row deep groove ball bearings
1505.	2205	25	52	18	0,16	self-aligning ball bearings
1506.	2206	30	62	20	0,26	self-aligning ball bearings
1507.	2207	35	72	23	0,4	self-aligning ball bearings
1508.	2208	40	80	23	0,51	self-aligning ball bearings
1509.	2209	45	85	23	0,55	self-aligning ball bearings

Bearing No.	Equivalent	Dimensions [mm]			Weight [kg]	Bearing type
		d	D	B		
1510.	2210	50	90	23	0,59	self-aligning ball bearings
1512.		60	120	28	1,1	self-aligning ball bearings
1513.	2213	65	120	31	1,45	self-aligning ball bearings
1516.	2216	80	140	33	2	self-aligning ball bearings
1517.	2217	85	150	36	2,5	self-aligning ball bearings
152.	6052	260	400	65	29,5	single-row deep groove ball bearings
153516.	22216 K	80	140	33	2,09	spherical roller bearings
153518.	22218 K	90	160	40	3,42	spherical roller bearings
153519.	22219 K	95	170	43	4,16	spherical roller bearings
153522.	22222 K	110	200	53	7,13	spherical roller bearings
153524.	22224 K	120	215	58	8,37	spherical roller bearings
153526.	22226 K	130	230	64	11,2	spherical roller bearings
153608.	22308 K	40	90	33	1,04	spherical roller bearings
153611.	22311 K	55	120	43	2,28	spherical roller bearings
153612.	22312 K	60	130	46	2,88	spherical roller bearings
153614.	22314 K	70	150	51	4,28	spherical roller bearings
153615.	22315 K	75	160	55	5,23	spherical roller bearings
153616.	22316 K	80	170	58	6,26	spherical roller bearings
153618.	22318 K	90	190	64	8,43	spherical roller bearings
153620.	22320 K	100	215	73	12,6	spherical roller bearings
153634.	22334 K	170	360	120	58,5	spherical roller bearings
1546908.		40	62	48	0,48	angular-contact radial ball bearings
156.	6056	280	420	65	33,6	single-row deep groove ball bearings
160026.	626 RS	6	19	6	0,008	single-row deep groove ball bearings
160105.	6005 RS	25	47	12	0,86	single-row deep groove ball bearings
160106.	6006 RS	30	55	13	0,14	single-row deep groove ball bearings
160109.		45	75	16	0,25	single-row deep groove ball bearings
160112.		60	95	18	0,46	single-row deep groove ball bearings
160200.	6200 RS	10	30	9	0,03	single-row deep groove ball bearings
160203.	6203 RS	17	40	12	0,065	single-row deep groove ball bearings
160204.	6204 RS	20	47	14	0,106	single-row deep groove ball bearings
160205.	6205 RS	25	52	15	0,12	single-row deep groove ball bearings
160206.	6206 RS	30	62	16	0,19	single-row deep groove ball bearings
160207.	6207 RS	35	72	17	0,29	single-row deep groove ball bearings
160208.	6208 RS	40	80	18	0,36	single-row deep groove ball bearings
160209.	6209 RS	45	85	19	0,41	single-row deep groove ball bearings
160303.	6303 RS	17	47	14	0,11	single-row deep groove ball bearings
160304.	6304 RS	20	52	15	0,14	single-row deep groove ball bearings
160306.	6306 RS	30	72	19	0,34	single-row deep groove ball bearings
160307.	6307 RS	35	80	21	0,44	single-row deep groove ball bearings
160312.	631 2RS	60	130	31	1,7	single-row deep groove ball bearings
1604.	2304	20	52	21	0,21	self-aligning ball bearings
1605.	2305	25	62	24	0,34	self-aligning ball bearings
160501.	62201 RS	12	32	14	0,064	single-row deep groove ball bearings
160502.	62202 RS	15	35	14	0,06	single-row deep groove ball bearings
160506.	62206 RS	30	62	20	0,25	single-row deep groove ball bearings
160507.	62207 RS	35	72	23	0,39	single-row deep groove ball bearings
160508.	62208 RS	40	80	23	0,45	single-row deep groove ball bearings
1606.	2306	30	72	27	0,5	self-aligning ball bearings
160605.		25	62	24	0,32	single-row deep groove ball bearings
160606.		30	72	19	0,49	single-row deep groove ball bearings
160609.		45	100	36	1,1	single-row deep groove ball bearings
1607.	2307	35	80	31	0,68	self-aligning ball bearings
160703.		17	62	20	0,29	single-row deep groove ball bearings
160707.		35	72	21	0,31	single-row deep groove ball bearings
1608.	2308	40	90	33	0,93	self-aligning ball bearings
1609.	2309	45	100	36	1,23	self-aligning ball bearings
160902.		16	40	12	0,067	single-row deep groove ball bearings
1610.	2310	50	110	40	1,61	self-aligning ball bearings
1611.	2311	55	120	43	2,1	self-aligning ball bearings
1612.	2312	60	130	46	2,6	self-aligning ball bearings
1613.	2313	65	140	48	3,2	self-aligning ball bearings
1614.	2314	70	150	51	3,92	self-aligning ball bearings
1616.	2316	80	170	58	6,1	self-aligning ball bearings
164.	6064	320	480	74	48,2	single-row deep groove ball bearings
166805.		25	62	28	0,54	double-row angular-contact ball bearings
168118.		90	120		1	single-direction angular-contact thrust ball bearings
168124.		120	155	72	1,11	single-direction angular-contact thrust ball bearings
168130.		150	190	90	1,9	single-direction angular-contact thrust ball bearings
168132.		160	200	96	2,06	single-direction angular-contact thrust ball bearings
168140.		200	250	132	4,05	single-direction angular-contact thrust ball bearings
168148.		240	300		6,7	single-direction angular-contact thrust ball bearings
168160.		300	380		15,5	single-direction angular-contact thrust ball bearings
1687/1060.		1060	1280		338	single-direction angular-contact thrust ball bearings
1688/1060.		1060	1180		119	single-direction angular-contact thrust ball bearings

https://nppnovoteh.com

22. CROSS LIST GOST

Bearing No.	Equivalent	Dimensions [mm]			Weight [kg]	Bearing type
		d	D	B		
17.	607	7	19	6	0,007	single-row deep groove ball bearings
172.	6072	360	540	82	71,5	single-row deep groove ball bearings
1730.		150	235	36	6	self-aligning ball bearings
174708.		40	66	22	0,36	needle roller bearings
176130.		150	225	35	4,6	single-row angular-contact double-direction ball bearings
176134.		170	260	42	8,25	single-row angular-contact double-direction ball bearings
176144.		220	340	56	20,4	single-row angular-contact double-direction ball bearings
176208.	QJ208	40	80	18	0,4	single-row angular-contact double-direction ball bearings
176211.	QJ211	55	100	21	1	single-row angular-contact double-direction ball bearings
176212.	QJ212	60	110	22	1	single-row angular-contact double-direction ball bearings
176215.	QJ215	75	130	25	1,9	single-row angular-contact double-direction ball bearings
176218.	QJ218	90	160	30	2,68	single-row angular-contact double-direction ball bearings
176220.	QJ220	100	180	34	3,65	single-row angular-contact double-direction ball bearings
176222.	QJ222	110	200	38	5,75	single-row angular-contact double-direction ball bearings
176226.	QJ226	130	230	40	7,2	single-row angular-contact double-direction ball bearings
176228.	QJ228	140	250	42	8,3	single-row angular-contact double-direction ball bearings
176232.	QJ232	160	290	48	15,4	single-row angular-contact double-direction ball bearings
176234.	QJ234	170	310	52	18,7	single-row angular-contact double-direction ball bearings
176236.	QJ236	180	320	52	17,8	single-row angular-contact double-direction ball bearings
176238.	QJ238	190	340	55	24,1	single-row angular-contact double-direction ball bearings
176240.	QJ240	200	360	58	25,1	single-row angular-contact double-direction ball bearings
176252.	QJ252	260	480	90	81	single-row angular-contact double-direction ball bearings
176268.	QJ268	340	620	92	128	single-row angular-contact double-direction ball bearings
176303.	QJ303	17	47	14	0,12	single-row angular-contact double-direction ball bearings
176304.	QJ304	20	52	15	0,17	single-row angular-contact double-direction ball bearings
176305.	QJ305	25	62	17	0,24	single-row angular-contact double-direction ball bearings
176307.	QJ307	35	80	21	0,48	single-row angular-contact double-direction ball bearings
176308.	QJ308	40	90	23	0,67	single-row angular-contact double-direction ball bearings
176309.	QJ309	45	100	25	0,9	single-row angular-contact double-direction ball bearings
176310.	QJ310	50	110	27	0,17	single-row angular-contact double-direction ball bearings
176311.	QJ311	55	120	29	1,49	single-row angular-contact double-direction ball bearings
176313.	QJ313	65	140	33	2,3	single-row angular-contact double-direction ball bearings
176314.	QJ314	70	150	35	2,77	single-row angular-contact double-direction ball bearings
176317.	QJ317	85	180	41	4,75	single-row angular-contact double-direction ball bearings
176320.	QJ320	100	215	47	7,74	single-row angular-contact double-direction ball bearings
17713.		65	120	32	2,67	special tapered roller bearings
17716.		80	140	38,5	3,11	special tapered roller bearings
17717.		85	140	38,5	3,23	special tapered roller bearings
17720.		100	180	46	8,4	special tapered roller bearings
17722.		110	170	39,5	4,82	special tapered roller bearings
17724.		120	180	44	6,29	special tapered roller bearings
17744.		220	300	56	10,51	special tapered roller bearings
17810.		50	90	28	1,21	special tapered roller bearings
17814.		70	120	32	2,54	special tapered roller bearings
17818.		90	140	30,5	2,88	special tapered roller bearings
17819.		95	152,4	33,75	3,45	special tapered roller bearings
17824.		120	190	50	7,9	special tapered roller bearings
17828.		140	190	38	5,18	special tapered roller bearings
17836.		180	235	37	7,25	special tapered roller bearings
178810.	234410	50	80	38	0,65	angular-contact double-direction thrust ball bearings
178811.	234411	55	90	44	0,91	angular-contact double-direction thrust ball bearings
178812.	234412	60	95	44	1,06	angular-contact double-direction thrust ball bearings
178813.	234413	65	100	44	1,13	angular-contact double-direction thrust ball bearings
178814.	234414	70	110	48	1,5	angular-contact double-direction thrust ball bearings
178815.	234415	75	115	48	1,62	angular-contact double-direction thrust ball bearings
178816.	234416	80	125	54	2,11	angular-contact double-direction thrust ball bearings
178817.	234417	85	130	54	2,27	angular-contact double-direction thrust ball bearings
178818.	234418	90	140	60	2,82	angular-contact double-direction thrust ball bearings
178819.	234419	95	145	60	2,96	angular-contact double-direction thrust ball bearings
178820.	234420	100	150	60	3,12	angular-contact double-direction thrust ball bearings
178822.	234422	110	170	72	5,12	angular-contact double-direction thrust ball bearings
178824.	234424	120	180	84	5,3	angular-contact double-direction thrust ball bearings
178826.	234426	130	200	84	8,15	angular-contact double-direction thrust ball bearings
178828.	234428	140	210	84	9,23	angular-contact double-direction thrust ball bearings
178830.	234430	150	225		10,6	angular-contact double-direction thrust ball bearings
178832.	234432	160	240	108	12,7	angular-contact double-direction thrust ball bearings
178834.	234434	170	260	120	17,8	angular-contact double-direction thrust ball bearings
178836.	234436	180	280		23,1	angular-contact double-direction thrust ball bearings
178840.	234440	200	310		31	angular-contact double-direction thrust ball bearings
178908.	234708	42	68	36	0,44	angular-contact double-direction thrust ball bearings
178916.	234716	84	125	54	1,95	angular-contact double-direction thrust ball bearings
178920.	234720	103	150	60	2,9	angular-contact double-direction thrust ball bearings
178922.	234722	114	170	72	4,8	angular-contact double-direction thrust ball bearings
178928.	234728	145	210		8,41	angular-contact double-direction thrust ball bearings
17920.		98,425	152,4	42	4,11	special tapered roller bearings

Bearing No.	Equivalent	Dimensions [mm]			Weight [kg]	Bearing type
		d	D	B		
17928.		140	210	46	6,53	special tapered roller bearings
18.	608	8	22	7	0,012	single-row deep groove ball bearings
1800.		10	35	11	0,06	self-aligning ball bearings
180026.	626 2RS	6	19	6	0,008	single-row deep groove ball bearings
180105.	6005 2RS	25	47	12	0,86	single-row deep groove ball bearings
180106.	6006 2RS	30	55	13	0,14	single-row deep groove ball bearings
180109.	6009 2RS	45	75	16	0,25	single-row deep groove ball bearings
180112.	6012 2RS	60	95		0,46	single-row deep groove ball bearings
180114.	6014 2RS	70	110	20	0,6	single-row deep groove ball bearings
180200.	6200 2RS	10	30	9	0,03	single-row deep groove ball bearings
180201.	6201 2RS	12	32	10	0,037	single-row deep groove ball bearings
180203.	6203 2RS	17	40	12	0,065	single-row deep groove ball bearings
180204.	6204 2RS	20	47	14	0,106	single-row deep groove ball bearings
180205.	6205 2RS	25	52	15	0,12	single-row deep groove ball bearings
180206.	6206 2RS	30	62	16	0,19	single-row deep groove ball bearings
180207.	6207 2RS	35	72	17	0,29	single-row deep groove ball bearings
180208.	6208 2RS	40	80	18	0,36	single-row deep groove ball bearings
180209.	6209 2RS	45	85	19	0,41	single-row deep groove ball bearings
180210.	6210 2RS	50	90	20	0,46	single-row deep groove ball bearings
180212.	6212 2RS	60	110	22	0,8	single-row deep groove ball bearings
180213.	6213 2RS	65	120	23	0,97	single-row deep groove ball bearings
180303.	6303 2RS	17	47	14	0,11	single-row deep groove ball bearings
180304.	6304 2RS	20	52	15	0,14	single-row deep groove ball bearings
180305.	6305 2RS	25	62	17	0,24	single-row deep groove ball bearings
180306.	6306 2RS	30	72	19	0,34	single-row deep groove ball bearings
180307.	6307 2RS	35	80	21	0,44	single-row deep groove ball bearings
180308.	6308 2RS	40	90	23	0,64	single-row deep groove ball bearings
180309.	6309 2RS	45	100	25	0,8	single-row deep groove ball bearings
180310.	6310 2RS	50	110	27	1,08	single-row deep groove ball bearings
180311.	6311 2RS	55	120	29	1,37	single-row deep groove ball bearings
180312.	6312 2RS	60	130	31	1,7	single-row deep groove ball bearings
180500.	62200 2RS	10	30	14	0,049	single-row deep groove ball bearings
180501.	62201 2RS	12	32	14	0,064	single-row deep groove ball bearings
180502.	62202 2RS	15	35	14	0,06	single-row deep groove ball bearings
180503.	62203 2RS	17	40	16	0,08	single-row deep groove ball bearings
180504.	62204 2RS	20	47	18	0,14	single-row deep groove ball bearings
180506.	62206 2RS	30	62	20	0,25	single-row deep groove ball bearings
180508.	62208 2RS	40	80	23	0,45	single-row deep groove ball bearings
180510.	62210 2RS	50	90	23	0,52	single-row deep groove ball bearings
180600.	62300 2RS	10	35	17	0,06	single-row deep groove ball bearings
180602.	62302 2RS	15	42	17	0,1	single-row deep groove ball bearings
180603.	62303 2RS	17	47	19	0,13	single-row deep groove ball bearings
180604.	6004 2RS	20	42	12	0,07	single-row deep groove ball bearings
180604.	62304 2RS	20	52	21	0,2	single-row deep groove ball bearings
180605.	62305 2RS	25	62	24	0,32	single-row deep groove ball bearings
180606.	62306 2RS	30	72	19	0,49	single-row deep groove ball bearings
180607.	62307 2RS	30	80	31	0,66	single-row deep groove ball bearings
180609.	62309 2RS	45	100	36	1,1	single-row deep groove ball bearings
180610.	62310 2RS	50	110	40	1,06	single-row deep groove ball bearings
180612.	62312 2RS	60	130	46	2,47	single-row deep groove ball bearings
180707.		35	72	21	0,31	single-row deep groove ball bearings
180707.		35	80	23	0,46	single-row deep groove ball bearings
18204.	53204	20	40	17	0,11	thrust ball bearings
18205.	53205	25	47	19	0,16	thrust ball bearings
18206.	53206	30	53	20	0,21	thrust ball bearings
18207.	53207	35	62	22	0,29	thrust ball bearings
18208.	53208	40	68	23	0,35	thrust ball bearings
18209.	53209	45	73	24	0,4	thrust ball bearings
18210.	53210	50	78	26	0,5	thrust ball bearings
18211.	53211	55	90	30	0,62	thrust ball bearings
18212.	53212	60	95	31	0,7	thrust ball bearings
18213.	53213	65	100	32	0,97	thrust ball bearings
18214.	53214	70	105	32	0,8	thrust ball bearings
18217.	53217	85	125	37	1,62	thrust ball bearings
18220.	53220	100	150	45	2,63	thrust ball bearings
18222.	53222	110	160	45	3,03	thrust ball bearings
18224.	53224	120	170	46	2,8	thrust ball bearings
18226.	53226	130	190	53	5,36	thrust ball bearings
18228.	53228	140	200	55	4,6	thrust ball bearings
18312.	53312	60	110	42	1,8	thrust ball bearings
18320.	53320	100	170	64	6,23	thrust ball bearings
18322.	53322	110	190	72	8,26	thrust ball bearings
18324.	53324	120	210	80	12,5	thrust ball bearings
1840094.		4	11	4	0,002	single-row deep groove ball bearings
1840095.		5	13	4	0,003	single-row deep groove ball bearings

https://nppnovoteh.com

22. CROSS LIST GOST

Bearing No.	Equivalent	Dimensions [mm]			Weight [kg]	Bearing type
		d	D	B		
18413.	53413	65	140	65	4,4	thrust ball bearings
18426.	53426	130	270	128	37	thrust ball bearings
1846922.		110	150	60	2,84	angular-contact radial ball bearings
18786.	53786	430	580	150	120	thrust ball bearings
18886.	53886	430	570	135	98	thrust ball bearings
19742.		210	460	122	112	tapered roller thrust bearings
19752.		260	580	175	218	tapered roller thrust bearings
19760.		300	670	170	342	tapered roller thrust bearings
200.	6200	10	30	9	0,03	single-row deep groove ball bearings
2000083.		3	7	2,5	0,0004	single-row deep groove ball bearings
2000087.		7	14	4	0,002	single-row deep groove ball bearings
2000809.		45	58	8	0,05	single-row deep groove ball bearings
2002780.		400	650	145	193	single-row cylindrical roller bearings
20028/670.		670	820	88	103	double-row cylindrical roller bearings
2002826.		130	165	22	1,15	single-row cylindrical roller bearings
2002872.		360	440	48	16,8	single-row cylindrical roller bearings
2007104.	32004 X	20	42	15	0,1	tapered roller bearings
2007105.	32005 X	25	47	15		tapered roller bearings
2007106.	32006 X	30	55	16	0,17	tapered roller bearings
2007107.	32007 X	35	62	17	0,22	tapered roller bearings
2007108.	32008 X	40	68	19	0,28	tapered roller bearings
2007109.	32009 X	45	75	19	0,33	tapered roller bearings
2007110.	32010 X	50	80	20	0,4	tapered roller bearings
2007111.	32011 X	55	90	22	0,54	tapered roller bearings
2007112.	32012 X	60	95	23	0,62	tapered roller bearings
2007113.	32013 X	65	100	22	0,62	tapered roller bearings
2007114.	32014 X	70	110	24	0,83	tapered roller bearings
2007115.	32015 X	75	115	24	0,91	tapered roller bearings
2007116.	32016 X	80	125	27	1,34	tapered roller bearings
2007117.	32017 X	85	130	29	1,35	tapered roller bearings
2007118.	32018 X	90	140	32	1,63	tapered roller bearings
2007119.	32019 X	95	140	30	1,75	tapered roller bearings
2007120.	32020 X	100	150	32	1,92	tapered roller bearings
2007121.	32021 X	105	160	35	2,35	tapered roller bearings
2007122.	32022 X	110	170	38	3,1	tapered roller bearings
2007124.	32024 X	120	180	38	3,3	tapered roller bearings
2007128.	32028 X	140	210	42	5,08	tapered roller bearings
2007132.	32032 X	160	240	48	7,74	tapered roller bearings
2007136.	32036 X	180	280	60	13,4	tapered roller bearings
2007138.	32038 X	190	290	60	14,4	tapered roller bearings
2007140.	32040 X	200	310	66	18,5	tapered roller bearings
2007144.	32044 X	220	340	72	22,9	tapered roller bearings
2007148.	32048 X	240	360	72	26	tapered roller bearings
2007152.	32052 X	260	400	82	36,9	tapered roller bearings
2007156.	32056 X	280	420	82	39,2	tapered roller bearings
2007160.	32060 X	300	460	95	55,9	tapered roller bearings
2007164.	32064 X	320	480	95	59,1	tapered roller bearings
20078/1320.		1320	1600	165	719	tapered roller bearings
20078/850.		850	1030		175	tapered roller bearings
20079/1320.		1320	1720	230	1431	tapered roller bearings
2007913.	32913	65	90	16	0,32	tapered roller bearings
2007915.	32915	75	105	19	0,53	tapered roller bearings
2007928.	32928	140	190	30	2,51	tapered roller bearings
2007934.	32934	170	230	36	4,4	tapered roller bearings
2007938.	32938	190	260	42	6,51	tapered roller bearings
2007944.	32944	220	300	48	10	tapered roller bearings
2007948.	32948	240	320	48	10,9	tapered roller bearings
2007952.	32952	260	360	60	18,4	tapered roller bearings
2007960.	32960	300	420	72	31,1	tapered roller bearings
2007968.	32968	340	460	76	34,2	tapered roller bearings
2007972.	32972	360	480	72	35,8	tapered roller bearings
201.	6201	12	32	10	0,037	single-row deep groove ball bearings
202.	6202	15	35	11	0,046	single-row deep groove ball bearings
203.	6203	17	40	12	0,06	single-row deep groove ball bearings
2032172.		360	540	106	92,7	single-row cylindrical roller bearings
2032780.		400	650	145	196	single-row cylindrical roller bearings
20329/500.		500	670	100	103	double-row cylindrical roller bearings
204.	6204	20	47	14	0,1	single-row deep groove ball bearings
205.	6205	25	52	15	0,12	single-row deep groove ball bearings
206.	6206	30	62	16	0,2	single-row deep groove ball bearings
2067708.		41,275	76,2	23,02	0,46	closed tapered roller bearings
2067712.		60,325	100	25,4	0,77	closed tapered roller bearings
207.	6207	35	72	17	0,29	single-row deep groove ball bearings
20703.		17	40	14	0,08	single-row deep groove ball bearings
2077140.		200	310	132	75,8	four-row tapered roller bearings

Bearing No.	Equivalent	Dimensions [mm]			Weight [kg]	Bearing type
		d	D	B		
2077144.		220	340	146,5	104	four-row tapered roller bearings
2077148.		240	360	149	108	four-row tapered roller bearings
2077152.		260	400	167,2	151	four-row tapered roller bearings
2077156.		280	420	165,5	159	four-row tapered roller bearings
2077460.		300	460	188	238	four-row tapered roller bearings
2077960.		300	420	137	123	four-row tapered roller bearings
2077960.		320	480	188	123	four-row tapered roller bearings
208.	6208	40	80	18	0,36	single-row deep groove ball bearings
20803.		17	47	15,5	0,13	single-row deep groove ball bearings
209.	6209	45	85	19	0,41	single-row deep groove ball bearings
2092992.		460	620	95	91	single-row cylindrical roller bearings
2097115.		75	115	24	1,89	double-row tapered roller bearings
2097132.		160	240	48	16,5	double-row tapered roller bearings
2097136.		180	280	60	27,9	double-row tapered roller bearings
2097140.		200	310	66	39,2	double-row tapered roller bearings
2097144.		220	340	72	47	double-row tapered roller bearings
2097148.		240	360	72	52,9	double-row tapered roller bearings
2097152.		260	400	82	75,6	double-row tapered roller bearings
2097156.		280	420	188	82,5	double-row tapered roller bearings
2097724.		120	200	48	11,7	double-row tapered roller bearings
2097726.		130	210	48	13,6	double-row tapered roller bearings
2097730.		150	250	60	25,8	double-row tapered roller bearings
2097732.		160	270	66	34,9	double-row tapered roller bearings
2097736.		180	300	72	43,2	double-row tapered roller bearings
2097738.		190	320	78	51,5	double-row tapered roller bearings
2097740.		200	340	82	61,5	double-row tapered roller bearings
2097744.		220	370	88	76,2	double-row tapered roller bearings
2097748.		240	400	95	96,3	double-row tapered roller bearings
2097752.		260	440	106	126	double-row tapered roller bearings
2097930.		150	210	36	8,41	double-row tapered roller bearings
2097936.		180	250	42	13,2	double-row tapered roller bearings
2097938.		190	260	42	13,5	double-row tapered roller bearings
2097940.		200	280	48	20,8	double-row tapered roller bearings
2097944.		220	300	48	21,5	double-row tapered roller bearings
2097948.		240	320	48	22	double-row tapered roller bearings
2097952.		260	360	60	38,3	double-row tapered roller bearings
2097960.		300	420	72	62,4	double-row tapered roller bearings
2097968.		340	460	72	71	double-row tapered roller bearings
2097972.		360	480	72	74,4	double-row tapered roller bearings
210.	6210	50	90	20	0,47	single-row deep groove ball bearings
2104.	N1004	20	42	12	0,08	single-row cylindrical roller bearings
211.	6211	55	100	21	0,6	single-row deep groove ball bearings
2110.	N1010	50	80	16	0,33	single-row cylindrical roller bearings
2111.	N1011	55	90	18	0,4	single-row cylindrical roller bearings
2113.	N1013	65	100	18	0,55	single-row cylindrical roller bearings
2118.	N1018	90	140	24	1,3	single-row cylindrical roller bearings
212.	6212	60	110	22	0,8	single-row deep groove ball bearings
2124.	N1024	120	180	28	2,55	single-row cylindrical roller bearings
212792.		460	800	218	1111	multi-row cylindrical roller bearings
213.	6213	65	120	23	0,98	single-row deep groove ball bearings
2132.	N1032	160	240	38	6	single-row cylindrical roller bearings
214.	6214	70	125	24	1,08	single-row deep groove ball bearings
215.	6215	75	130	25	1,18	single-row deep groove ball bearings
216.	6216	80	140	26	1,4	single-row deep groove ball bearings
217.	6217	85	150	28	1,8	single-row deep groove ball bearings
218.	6218	90	160	30	2,3	single-row deep groove ball bearings
2180120.		100	150	30	1,53	single-row deep groove ball bearings
21821/670.		670	980	180	462	double-row cylindrical roller bearings
219.	6219	95	170	32	2,7	single-row deep groove ball bearings
220.	6220	100	180	34	3,2	single-row deep groove ball bearings
2202.	N202	15	35	11	0,05	single-row cylindrical roller bearings
2204.	N204	20	47	14	0,13	single-row cylindrical roller bearings
2205.	N205	25	52	15	0,15	single-row cylindrical roller bearings
2206.	N206	30	62	16	0,24	single-row cylindrical roller bearings
2207.	N207	35	72	17	0,35	single-row cylindrical roller bearings
2208.	N208	40	80	18	0,4	single-row cylindrical roller bearings
2209.	N209	45	85	19	0,49	single-row cylindrical roller bearings
221.	6221	105	190	36	3,6	single-row deep groove ball bearings
2210.	N210	50	90	20	0,57	single-row cylindrical roller bearings
2211.	N211	55	100	21	0,76	single-row cylindrical roller bearings
2212.	N212	60	110	22	0,95	single-row cylindrical roller bearings
2213.	N213	65	120	23	1,2	single-row cylindrical roller bearings
2214.	N214	70	125	24	1,3	single-row cylindrical roller bearings
2215.	N215	75	130	25	1,4	single-row cylindrical roller bearings
2216.	N216	80	140	26	1,8	single-row cylindrical roller bearings

https://nppnovoteh.com

22. CROSS LIST GOST

Bearing No.	Equivalent	Dimensions [mm]			Weight [kg]	Bearing type
		d	D	B		
2217.	N217	85	150	28	2,27	single-row cylindrical roller bearings
2218.	N218	90	160	38	2,8	single-row cylindrical roller bearings
222.	6222	110	200	38	4,5	single-row deep groove ball bearings
2220.	N220	100	180	34	4	single-row cylindrical roller bearings
2222.	N222	110	200	38	6	single-row cylindrical roller bearings
2224.	N224	120	215	40	6,6	single-row cylindrical roller bearings
2226.	N226	130	230	40	7,5	single-row cylindrical roller bearings
2228.	N228	140	250	42	9,6	single-row cylindrical roller bearings
2230.	N230	150	270	45	12,4	single-row cylindrical roller bearings
2232.	N232	160	290	48	14,5	single-row cylindrical roller bearings
22320.		100	215	47	9	single-row cylindrical roller bearings
2234.	N234	160	310	52	18,3	single-row cylindrical roller bearings
2236.	N236	180	320	52	18,5	single-row cylindrical roller bearings
224.	6224	120	215	40	5,2	single-row deep groove ball bearings
226.	6226	130	230	40	7,72	single-row deep groove ball bearings
228.	6228	140	250	42	9,8	single-row deep groove ball bearings
23.	623	3	10	4	0,0016	single-row deep groove ball bearings
230.	6230	150	270	45	12,3	single-row deep groove ball bearings
2305.	N305	25	62	17	0,3	single-row cylindrical roller bearings
2306.	N306	30	72	19	0,4	single-row cylindrical roller bearings
2307.	N307	35	80	21	0,55	single-row cylindrical roller bearings
2308.	N308	40	90	23	0,78	single-row cylindrical roller bearings
2309.	N309	45	100	25	1	single-row cylindrical roller bearings
2310.	N310	50	110	27	1,35	single-row cylindrical roller bearings
2311.	N311	55	120	29	1,7	single-row cylindrical roller bearings
2312.	N312	60	130	31	2,1	single-row cylindrical roller bearings
2313.	N313	65	140	33	2,6	single-row cylindrical roller bearings
2314.	N314	70	150	35	3,2	single-row cylindrical roller bearings
2315.	N315	75	160	37	3,52	single-row cylindrical roller bearings
2316.	N316	80	170	39	4,45	single-row cylindrical roller bearings
2317.	N317	85	180	41	5,5	single-row cylindrical roller bearings
2318.	N318	90	190	43	6,1	single-row cylindrical roller bearings
2319.	N319	95	200	45	7,2	single-row cylindrical roller bearings
232.	6232	160	290	48	15	single-row deep groove ball bearings
2320.	N320	100	215	47	9	single-row cylindrical roller bearings
232126.		130	250	80	17	single-row cylindrical roller bearings
2322.	N322	110	240	50	12,5	single-row cylindrical roller bearings
2324.	N324	120	260	55	15,7	single-row cylindrical roller bearings
2326.	N326	130	280	58	18,5	single-row cylindrical roller bearings
232822.		110	215	76,7	14	single-row cylindrical roller bearings
234.	6234	170	310	52	15	single-row deep groove ball bearings
236.	6236	180	320	52	16	single-row deep groove ball bearings
236104.	7004 C-UO x2	20	42	24	0,13	angular-contact radial ball bearings
236105.	7005 C-UO x2	25	47	24	0,15	angular-contact radial ball bearings
236106.	7006 C-UO x2	30	55	26	0,23	angular-contact radial ball bearings
236107.	7007 C-UO x2	35	62	28	0,3	angular-contact radial ball bearings
236108.	7008 C-UO x2	40	68	30	0,37	angular-contact radial ball bearings
236109.	7009 C-UO x2	45	75	32	0,48	angular-contact radial ball bearings
236111.	7011 C-UO x2	55	90	36	0,76	angular-contact radial ball bearings
236113.	7013 C-UO x2	65	100	36	0,87	angular-contact radial ball bearings
236114.	7014 C-UO x2	70	110	40	1,22	angular-contact radial ball bearings
236115.	7015 C-UO x2	75	115	40	1,26	angular-contact radial ball bearings
236117.	7017 C-UO x2	85	130	44	1,96	angular-contact radial ball bearings
236118.	7018 C-UO x2	90	140	48	2,3	angular-contact radial ball bearings
236124.	7024 C-UO x2	120	180	56	4,08	angular-contact radial ball bearings
236201.	7001 C-UO x2	12	32	20	0,074	angular-contact radial ball bearings
236202.	7202 C-UO x2	15	35	22	0,09	angular-contact radial ball bearings
236203.	7203 C-UO x2	17	40	24	0,125	angular-contact radial ball bearings
236204.	7204 C-UO x2	20	47	28	0,203	angular-contact radial ball bearings
236205.	7205 C-UO x2	25	52	30	0,244	angular-contact radial ball bearings
236206.	7206 C-UO x2	30	62	32	0,41	angular-contact radial ball bearings
236207.	7207 C-UO x2	35	72	34	0,56	angular-contact radial ball bearings
236208.	7208 C-UO x2	40	80	36	0,72	angular-contact radial ball bearings
236210.	7210 C-UO x2	50	90	40	0,89	angular-contact radial ball bearings
236211.	7211 C-UO x2	55	100	42	1,2	angular-contact radial ball bearings
236214.	7214 C-UO x2	70	125	48	2,19	angular-contact radial ball bearings
236217.	7217 C-UD x2	85	150	56	3,36	angular-contact radial ball bearings
236219.	7219 C-UO x2	95	170	64	5,2	angular-contact radial ball bearings
238.	6238	190	340	55	23,3	single-row deep groove ball bearings
24.	624	4	13	5	0,003	single-row deep groove ball bearings
2409.	N409	45	120	29	1,9	single-row cylindrical roller bearings
2411.	N411	55	140	33	2,9	single-row cylindrical roller bearings
2413.	N413	65	160	37	4,6	single-row cylindrical roller bearings
2416.	N416	80	200	48	8,71	single-row cylindrical roller bearings
244.	6244	220	400	65	32,4	single-row deep groove ball bearings

Bearing No.	Equivalent	Dimensions [mm]			Weight [kg]	Bearing type
		d	D	B		
246108.	7008 A-UO x2	40	68	30	0,39	angular-contact radial ball bearings
246109.	7009 A-UO x2	45	75	32	0,5	angular-contact radial ball bearings
246110.	7010 A-UO x2	50	80	36	0,54	angular-contact radial ball bearings
246111.	7011 A x3	55	90	54	1,25	angular-contact radial ball bearings
246111.	7011 A-UO x2	55	90	36	0,83	angular-contact radial ball bearings
246112.	7012 A-UO x2	60	95	36	0,84	angular-contact radial ball bearings
246112.	7013 A x3	60	95	54	1,26	angular-contact radial ball bearings
246113.	7014 A x3	65	100	54	1,44	angular-contact radial ball bearings
246116.	7016 A x3	80	125	66	2,5	angular-contact radial ball bearings
246117.	7017 A-UO x2	85	130	44	1,96	angular-contact radial ball bearings
24612.	7016 A-UO x2	130	200	66	7,4	angular-contact radial ball bearings
24612.	7020 A-UO x2	100	150	48	2,92	angular-contact radial ball bearings
246120.	7020 A x3	100	150	72	4,38	angular-contact radial ball bearings
246126.	7026 A x3	130	200	99	9,75	angular-contact radial ball bearings
246204.	7204 A-UO x2	20	47	28	0,22	angular-contact radial ball bearings
246207.	7207 A-UO x2	35	72	34	0,59	angular-contact radial ball bearings
246213.	7213 A-UO x2	65	120	46	2	angular-contact radial ball bearings
246222.	7222 A-UO x2	110	200	76	9,6	angular-contact radial ball bearings
25.	625	5	16	5	0,005	single-row deep groove ball bearings
2505.	N2205	25	52	18	0,19	single-row cylindrical roller bearings
2519.	N2219	95	170	43	4,35	single-row cylindrical roller bearings
2524.	N2224	120	215	58	9,8	single-row cylindrical roller bearings
254700.	NK14/20	14	22	20	0,02	needle roller bearings
254701.	NK16/16	16	24	16	0,022	needle roller bearings
254703.	RNA4902	20	28	13	0,222	needle roller bearings
254705.	RNA4904	25	37	17	0,056	needle roller bearings
254705.		30	40	30	0,067	needle roller bearings
254707.	NK40/20	40	50	20	0,08	needle roller bearings
254708.	NK45/20	45	55	20	0,09	needle roller bearings
254804.	NK26/20	26	34	20	0,042	needle roller bearings
254900.		15	24	12	0,025	needle roller bearings
254900.		20	30	20	0,04	needle roller bearings
254901.	NK17/20	17	25	20	0,03	needle roller bearings
254902.	NK20/20	20	28	20	0,03	needle roller bearings
254903.	RNA6903	22	30	23	0,04	needle roller bearings
254904.	NKS25	25	38	20	0,076	needle roller bearings
254905.	NK30/30	30	40	30	0,09	needle roller bearings
254906.	NK35/30	35	45	30	0,107	needle roller bearings
254908.		50	62	25	0,15	needle roller bearings
254910.	NK60/25	60	72	25	0,18	needle roller bearings
2556.	N2256	280	500	130	119	single-row cylindrical roller bearings
256500.		10	30	14	0,05	double-row angular-contact ball bearings
256705.		25	62	28	0,29	double-row angular-contact ball bearings
256708.		42	75	37	0,57	double-row angular-contact ball bearings
256805.		25	52	23	0,19	double-row angular-contact ball bearings
26.	626	6	19	6	0,008	single-row deep groove ball bearings
260605.		25	98	27	1,17	single-row deep groove ball bearings
2609.	N2309	45	100	36	1,38	single-row cylindrical roller bearings
260902.		16	76	40	1,14	single-row deep groove ball bearings
2611.	N2311	55	120	43	2,15	single-row cylindrical roller bearings
2612.	N2312	60	130	46	3,16	single-row cylindrical roller bearings
2614.	N2314	70	150	51	4,53	single-row cylindrical roller bearings
2615.	N2315	75	160	55	5,8	single-row cylindrical roller bearings
2619.	N2319	95	200	67	11	single-row cylindrical roller bearings
26202.		15	35	11,5	0,046	angular-contact radial ball bearings
26216.		80	140	26,5	1,3	angular-contact radial ball bearings
2622.	N2322	110	240	80	19,4	single-row cylindrical roller bearings
2622134.		192	260	54	7,89	single-row cylindrical roller bearings
2626.	N2326	130	280	93	31,9	single-row cylindrical roller bearings
266130.		150	225	70	9,86	angular-contact radial ball bearings
266132.		160	240	76	12,3	angular-contact radial ball bearings
266134.		170	260	84	16,5	angular-contact radial ball bearings
266140.		200	310	102	29,6	angular-contact radial ball bearings
266144.		220	340	112	37,4	angular-contact radial ball bearings
266148.		240	360	112	40,7	angular-contact radial ball bearings
266152.		260	400	130	60,6	angular-contact radial ball bearings
266156.		280	420	130	65	angular-contact radial ball bearings
266206.		30	62	32	0,42	angular-contact radial ball bearings
266210.		50	90	40	0,98	angular-contact radial ball bearings
266318.		90	180	86	10,1	angular-contact radial ball bearings
266340.		200	420	160	114	angular-contact radial ball bearings
27.	627	7	22	7	0,013	single-row deep groove ball bearings
2712.		60	140	51	4,03	single-row cylindrical roller bearings
27306.		30	72	19	0,37	tapered roller bearings
27307.	31307	35	80	21	0,52	tapered roller bearings

https://nppnovoteh.com

22. CROSS LIST GOST

Bearing No.	Equivalent	Dimensions [mm]			Weight [kg]	Bearing type
		d	D	B		
27308.	31308	40	90	23	0,77	tapered roller bearings
27309.	31309	45	100	25	0,95	tapered roller bearings
27310.	31310	50	110	27	1,23	tapered roller bearings
27311.	31311	55	120	29	1,58	tapered roller bearings
27312.	31312	60	130	31	1,91	tapered roller bearings
27313.	31313	65	140	33	2,58	tapered roller bearings
27315.	31315	75	160	37	3,5	tapered roller bearings
27317.	31317	85	180	41	4,7	tapered roller bearings
2732.		160	215	30	3,26	single-row cylindrical roller bearings
2740.		200	340	50	19,8	single-row cylindrical roller bearings
2746.		230	370	80	41,3	single-row cylindrical roller bearings
27518.	32218	90	160	40	3,54	tapered roller bearings
27606.	32306	30	72	29	0,62	tapered roller bearings
27607.	32307	35	80	31	0,81	tapered roller bearings
27608.	32308	40	90	33	1,1	tapered roller bearings
27613.	32313	65	140	48	3,75	tapered roller bearings
27616.	32316	80	170	58	6,63	tapered roller bearings
27705.		25	62	17	0,27	tapered roller bearings
27706.		30	72	24	0,47	tapered roller bearings
27709.		45	100	29	0,37	tapered roller bearings
27911.		53,975	123,825	36,07	2,26	tapered roller bearings
280017.		7	19	6	0,009	single-row deep groove ball bearings
280114.		70	110	20	0,6	single-row deep groove ball bearings
286805.		25	62	28	0,52	double-row angular-contact ball bearings
29.	629	9	26	8	0,019	single-row deep groove ball bearings
292116.	RNU1016	91,5	125	22	0,99	single-row cylindrical roller bearings
292152.	RNU1052	290	400	65	23,6	single-row cylindrical roller bearings
292202.	RNU202	20	35	11	0,04	single-row cylindrical roller bearings
292203.	RNU203	22,9	40	12	0,06	single-row cylindrical roller bearings
292204.	RNU204	27	47	14	0,09	single-row cylindrical roller bearings
292205.	RNU205	32	52	15	0,11	single-row cylindrical roller bearings
292206.	RNU206	38,5	62	16	0,16	single-row cylindrical roller bearings
292207.	RNU207	43,8	72	17	0,28	single-row cylindrical roller bearings
292208.	RNU208	50	80	18	0,29	single-row cylindrical roller bearings
292211.	RNU211	66,5	100	21	0,49	single-row cylindrical roller bearings
292212.	RNU212	73,5	110	22	0,73	single-row cylindrical roller bearings
292213.	RNU213	79,6	120	23	0,81	single-row cylindrical roller bearings
292215.	RNU215	88,5	130	25	0,99	single-row cylindrical roller bearings
292216.	RNU216	95,3	140	26	1,37	single-row cylindrical roller bearings
292218.	RNU218	107	160	30	1,88	single-row cylindrical roller bearings
292306.	RNU306	42	72	12	0,28	single-row cylindrical roller bearings
292308.	RNU308	53,5	90	23	0,53	single-row cylindrical roller bearings
292310.	RNU310	65	110	27	1,05	single-row cylindrical roller bearings
292617.		108	180	60	6,13	single-row cylindrical roller bearings
297308.		40	90	23	1,7	double-row tapered roller bearings
29903.		16	41,3	12,7	0,09	tapered roller thrust bearings
29908.		38,4	72,9	21,34	0,39	tapered roller thrust bearings
300.	6300	10	35	11	0,05	single-row deep groove ball bearings
30029/950.		950	1250	224	757	single-row cylindrical roller bearings
30031/530.		530	780	185	303	spherical roller bearings
30031/560.		560	820	195	383	spherical roller bearings
3003124.	23024	120	180	46	4,5	spherical roller bearings
3003128.	23028	140	210	52	7	spherical roller bearings
3003130.	23030	150	225	56	7,9	spherical roller bearings
3003132.	23032	160	240	60	10,3	spherical roller bearings
3003136.	23036	180	280	74	15,7	spherical roller bearings
3003140.	23040	200	310	82	23	spherical roller bearings
3003144.	23044	220	340	90	31	spherical roller bearings
3003148.	23048	240	360	92	34,5	spherical roller bearings
3003156.	23056	280	420	106	63	spherical roller bearings
3003160.	23060	300	460	118	75,2	spherical roller bearings
3003164.	23064	320	480	121	80	spherical roller bearings
3003168.	23068	340	520	133	109	spherical roller bearings
3003172.	23072	360	540	134	114	spherical roller bearings
3003180.	23080	400	600	148	154	spherical roller bearings
3003188.	23088	440	650	157	187	spherical roller bearings
3003192.	23092	460	680	163	216	spherical roller bearings
3003196.	23096	480	700	165	230	spherical roller bearings
3003220.	23220	100	180	60,3	7,02	spherical roller bearings
30037/500.		500	830	264	595	spherical roller bearings
30037/600.		600	980	300	921	spherical roller bearings
3003732.	23132	160	270	86	20	spherical roller bearings
3003744.	23144	220	370	120	59	spherical roller bearings
3003748.	23148	240	400	128	65,7	spherical roller bearings
3003752.	23152	260	440	144	97	spherical roller bearings

Bearing No.	Equivalent	Dimensions [mm]			Weight [kg]	Bearing type
		d	D	B		
3003756.	23156	280	460	146	100	spherical roller bearings
3007114.	33014	70	110	31	1,09	tapered roller bearings
3007117.	33017	85	130	36	1,75	tapered roller bearings
3007205.	33205	25	52	22	0,22	tapered roller bearings
3007210.	33210	50	90	32	0,87	tapered roller bearings
3007212.	33212	60	110	38	1,57	tapered roller bearings
3007215.	33215	75	130	41	2,17	tapered roller bearings
3007722.	33122	110	180	56	5,49	tapered roller bearings
301.	6301	12	37	12	0,06	single-row deep groove ball bearings
3013125.	23028 K + H3028	125	210	53	10,6	spherical roller bearings
3013140.	23044 K + H3044	200	340	90	41,9	spherical roller bearings
3013152.	23056 K + H3056	260	420	106	84,2	spherical roller bearings
3013156.	23060 K + H3060	280	460	118	95,8	spherical roller bearings
3013738.	23042 K + H3042	190	340	112	51	spherical roller bearings
3013748.	23152 K + H3152	240	440	144	115,5	spherical roller bearings
302.	6302	15	42	13	0,08	single-row deep groove ball bearings
303.	6303	17	47	14	0,11	single-row deep groove ball bearings
3032180.		400	600	148	147	single-row cylindrical roller bearings
304.	6304	20	52	15	0,14	single-row deep groove ball bearings
305.	6305	25	62	17	0,23	single-row deep groove ball bearings
305332.		110	240	92,1	20,9	spherical roller bearings
3056203.	3203	17	40	17,5	0,1	double-row angular-contact ball bearings
3056204.	3204	20	47	20,6	0,17	double-row angular-contact ball bearings
3056205.	3205	25	52	20,6	0,19	double-row angular-contact ball bearings
3056206.	3206	30	62	23,8	0,32	double-row angular-contact ball bearings
3056207.	3207	35	72	27	0,48	double-row angular-contact ball bearings
3056208.	3208	40	80	30,2	0,65	double-row angular-contact ball bearings
3056209.	3209	45	85	30,2	0,72	double-row angular-contact ball bearings
3056210.	3210	50	90	30,2	0,75	double-row angular-contact ball bearings
3056211.	3211	55	100	33,3	1,12	double-row angular-contact ball bearings
3056212.	3212	30	110	36,5	1,4	double-row angular-contact ball bearings
3056213.	3213	65	120	38,1	1,75	double-row angular-contact ball bearings
3056214.	3214	70	125	39,7	1,85	double-row angular-contact ball bearings
3056215.	3215	75	130	41,3	2,03	double-row angular-contact ball bearings
3056216.	3216	80	140	44,5	2,57	double-row angular-contact ball bearings
3056217.	3217	85	150	49,2	3,4	double-row angular-contact ball bearings
3056218.	3218	90	160	52,4	4,22	double-row angular-contact ball bearings
3056219.	3219	95	170	55,6	5	double-row angular-contact ball bearings
3056220.	3220	100	180	60,3	6,14	double-row angular-contact ball bearings
3056221.	3221	105	190	65,1	7,14	double-row angular-contact ball bearings
3056222.	3222	110	200	69,8	8,8	double-row angular-contact ball bearings
3056305.	3305	25	62	25,4	0,37	double-row angular-contact ball bearings
3056306.	3306	30	72	30,2	0,59	double-row angular-contact ball bearings
3056309.	3309	45	100	39,7	1,4	double-row angular-contact ball bearings
3056310.	3310	50	110	44,4	1,95	double-row angular-contact ball bearings
306.	6306	30	72	19	0,34	single-row deep groove ball bearings
307.	6307	35	80	21	0,44	single-row deep groove ball bearings
3073740.		220	370	120	66	spherical roller bearings
307752.		260	320	38	5,55	tapered roller bearings
30777/530.		530	880	260	1320	four-row tapered roller bearings
307986.		431,8	533,4	54	17,7	tapered roller bearings
308.	6308	40	90	23	0,63	single-row deep groove ball bearings
308109.		45	65	10,57	0,09	thrust ball bearings
3086304.		20	52	22,2	0,28	double-row angular-contact ball bearings
3086309.		45	100	39,7	1,42	double-row angular-contact ball bearings
3086313.		65	140	58,7	3,99	double-row angular-contact ball bearings
309.	6309	45	100	25	0,83	single-row deep groove ball bearings
310.	6310	50	100	27	1,08	single-row deep groove ball bearings
311.	6311	55	120	29	1,35	single-row deep groove ball bearings
3113140.		200	310	82	22	spherical roller bearings
3113148.		240	360	92	33,5	spherical roller bearings
3113164.		320	480	121	77,5	spherical roller bearings
3113172.		360	540	134	111	spherical roller bearings
3113188.		440	650	157	181	spherical roller bearings
31132/530.		530	980	355	1230	spherical roller bearings
3113776.		380	620	194	233	spherical roller bearings
3113780.		400	650	200	263	spherical roller bearings
3113792.		460	760	240	459	spherical roller bearings
312.	6312	60	130	31	1,7	single-row deep groove ball bearings
313.	6313	65	140	33	2,11	single-row deep groove ball bearings
314.	6314	70	150	35	2,6	single-row deep groove ball bearings
315.	6315	75	160	37	3,1	single-row deep groove ball bearings
3156211.		55	100	33,3	1,08	double-row angular-contact ball bearings
3156307.		35	80	34,9	0,94	double-row angular-contact ball bearings
3156896.		480	600	90	60,2	double-row angular-contact ball bearings

https://nppnovoteh.com

22. CROSS LIST GOST

Bearing No.	Equivalent	Dimensions [mm]			Weight [kg]	Bearing type
		d	D	B		
316.	6316	80	170	39	3,6	single-row deep groove ball bearings
3160202.		15	35	15,9	0,06	single-row deep groove ball bearings
317.	6317	85	180	41	4,3	single-row deep groove ball bearings
318.	6318	90	190	43	5,1	single-row deep groove ball bearings
3180018.	630/8 2RS	8	22	11	0,02	single-row deep groove ball bearings
3180202.		15	35	15,9	0,06	single-row deep groove ball bearings
3180209.		45	85	30,2	0,65	single-row deep groove ball bearings
31821/500.		500	720	167	213	double-row cylindrical roller bearings
3182106.	NN3006 K	30	55	19	0,19	double-row cylindrical roller bearings
3182107.	NN3007 K	35	62	20	0,25	double-row cylindrical roller bearings
3182108.	NN3008 K	40	68	21	0,32	double-row cylindrical roller bearings
3182109.	NN3009 K	45	75	23	0,4	double-row cylindrical roller bearings
3182110.	NN3010 K	50	80	23	0,43	double-row cylindrical roller bearings
3182111.	NN3011 K	55	90	26	0,62	double-row cylindrical roller bearings
3182112.	NN3012 K	60	95	26	0,69	double-row cylindrical roller bearings
3182113.	NN3013 K	65	100	26	0,7	double-row cylindrical roller bearings
3182114.	NN3014 K	70	110	30	1,06	double-row cylindrical roller bearings
3182115.	NN3015 K	75	115	30	1,03	double-row cylindrical roller bearings
3182116.	NN3016 K	80	125	34	1,43	double-row cylindrical roller bearings
3182117.	NN3017 K	85	130	34	1,5	double-row cylindrical roller bearings
3182118.	NN3018 K	90	140	37	2,03	double-row cylindrical roller bearings
3182119.	NN3019 K	95	145	37	2,13	double-row cylindrical roller bearings
3182120.	NN3020 K	100	150	37	2,2	double-row cylindrical roller bearings
3182121.	NN3021 K	105	160	41	2,86	double-row cylindrical roller bearings
3182122.	NN3022 K	110	170	45	3,53	double-row cylindrical roller bearings
3182124.	NN3024 K	120	180	46	3,7	double-row cylindrical roller bearings
3182126.	NN3026 K	130	200	52	5,36	double-row cylindrical roller bearings
3182128.	NN3028 K	140	210	53	6,06	double-row cylindrical roller bearings
3182130.	NN3030 K	150	225	56	7,57	double-row cylindrical roller bearings
3182132.	NN3032 K	160	240	60	8,4	double-row cylindrical roller bearings
3182134.	NN3034 K	170	260	67	12,9	double-row cylindrical roller bearings
3182136.	NN3036 K	180	280	74	16,9	double-row cylindrical roller bearings
3182140.	NN3040 K	200	310	82	22	double-row cylindrical roller bearings
3182144.	NN3044 K	220	340	90	29,4	double-row cylindrical roller bearings
3182148.	NN3048 K	240	360	92	32,65	double-row cylindrical roller bearings
3182156.	NN3056 K	280	420	106	49,2	double-row cylindrical roller bearings
3182164.	NN3064 K	320	480	121	74,9	double-row cylindrical roller bearings
3182168.	NN3068 K	340	520	133	97,9	double-row cylindrical roller bearings
3182172.	NN3072 K	360	540	134	106	double-row cylindrical roller bearings
3182192.	NN3092 K	460	680	163	198	double-row cylindrical roller bearings
320.	6320	100	215	47	7	single-row deep groove ball bearings
321.	6321	105	225	49	8,2	single-row deep groove ball bearings
32106.	NU1006	30	55	13	0,14	single-row cylindrical roller bearings
32107.	NU1007	35	62	14	0,18	single-row cylindrical roller bearings
32108.	NU1008	40	68	15	0,22	single-row cylindrical roller bearings
32109.	NU1009	45	75	16	0,3	single-row cylindrical roller bearings
32110.	NU1010	50	80	16	0,33	single-row cylindrical roller bearings
32111.	NU1011	55	90	18	0,4	single-row cylindrical roller bearings
32113.	NU1013	65	100	18	0,55	single-row cylindrical roller bearings
32114.	NU1014	70	110	20	0,76	single-row cylindrical roller bearings
32115.	NU1015	75	115	20	0,74	single-row cylindrical roller bearings
32116.	NU1016	80	125	22	1,08	single-row cylindrical roller bearings
32117.	NU1017	85	130	22	1,9	single-row cylindrical roller bearings
32118.	NU1018	90	140	24	1,3	single-row cylindrical roller bearings
32119.	NU1019	95	145	24	1,61	single-row cylindrical roller bearings
32120.	NU1020	100	150	24	1,51	single-row cylindrical roller bearings
32121.	NU1021	105	160	26	1,84	single-row cylindrical roller bearings
32122.	NU1022	110	170	28	2,4	single-row cylindrical roller bearings
32124.	NU1024	120	180	28	2,55	single-row cylindrical roller bearings
32126.	NU1026	130	200	33	3,95	single-row cylindrical roller bearings
32128.	NU1028	140	210	33	3,75	single-row cylindrical roller bearings
32132.	NU1032	160	240	38	6	single-row cylindrical roller bearings
32134.	NU1034	160	260	42	8,4	single-row cylindrical roller bearings
32136.	NU1036	180	280	46	11,1	single-row cylindrical roller bearings
32140.	NU1040	200	310	51	15	single-row cylindrical roller bearings
32144.	NU1044	220	340	56	18,9	single-row cylindrical roller bearings
32152.	NU1052	260	400	65	30,9	single-row cylindrical roller bearings
32160.	NU1030	150	225	35	4,76	single-row cylindrical roller bearings
32160.	NU1060	300	460	74	46,1	single-row cylindrical roller bearings
32192.	NU1092	460	680	100	126	single-row cylindrical roller bearings
322.	6322	110	240	50	9,8	single-row deep groove ball bearings
32202.	NU202	15	35	11	0,05	single-row cylindrical roller bearings
32203.	NU203	17	40	12	0,06	single-row cylindrical roller bearings
32204.	NU204	20	47	14	0,13	single-row cylindrical roller bearings
32205.	NU205	25	52	15	0,15	single-row cylindrical roller bearings

Bearing No.	Equivalent	Dimensions [mm]			Weight [kg]	Bearing type
		d	D	B		
32206.	NU206	30	62	16	0,24	single-row cylindrical roller bearings
32207.	NU207	35	72	17	0,35	single-row cylindrical roller bearings
32208.	NU208	40	80	18	0,4	single-row cylindrical roller bearings
32209.	NU209	45	85	19	0,49	single-row cylindrical roller bearings
32210.	NU210	50	90	20	0,57	single-row cylindrical roller bearings
32211.	NU211	55	100	21	0,76	single-row cylindrical roller bearings
32212.	NU212	60	110	22	0,95	single-row cylindrical roller bearings
32213.	NU213	65	120	23	1,2	single-row cylindrical roller bearings
32214.	NU214	70	125	24	1,3	single-row cylindrical roller bearings
32215.	NU215	75	130	25	1,4	single-row cylindrical roller bearings
32216.	NU216	80	140	26	1,8	single-row cylindrical roller bearings
32218.	NU218	90	160	38	2,8	single-row cylindrical roller bearings
32219.	NU219	95	170	36	2,9	single-row cylindrical roller bearings
32220.	NU220	100	180	34	4	single-row cylindrical roller bearings
32221.	NU220	105	190	32	5	single-row cylindrical roller bearings
32221/560.		560	820	195	377	double-row cylindrical roller bearings
32222.	NU224	110	200	38	6	single-row cylindrical roller bearings
322220.		100	180	34	3,27	single-row cylindrical roller bearings
32224.	NU224	120	215	40	6,6	single-row cylindrical roller bearings
32226.	NU226	130	230	40	7,5	single-row cylindrical roller bearings
32228.	NU228	140	250	42	9,6	single-row cylindrical roller bearings
32230.	NU230	150	270	45	12,4	single-row cylindrical roller bearings
32232.	NU232	160	290	48	14,5	single-row cylindrical roller bearings
32234.	NU234	160	310	52	18,3	single-row cylindrical roller bearings
32240.	NU240	200	360	58	28	single-row cylindrical roller bearings
32244.	NU244	220	400	65	39	single-row cylindrical roller bearings
32248.	NU248	240	440	72	51,3	single-row cylindrical roller bearings
32302.	NU302	15	42	13	0,11	single-row cylindrical roller bearings
32305.	NU305	25	62	17	0,3	single-row cylindrical roller bearings
32306.	NU306	30	72	19	0,4	single-row cylindrical roller bearings
32307.	NU307	35	80	21	0,55	single-row cylindrical roller bearings
32308.	NU308	40	90	23	0,78	single-row cylindrical roller bearings
32309.	NU309	45	100	25	1	single-row cylindrical roller bearings
32310.	NU310	50	110	27	1,35	single-row cylindrical roller bearings
32311.	NU311	55	120	29	1,7	single-row cylindrical roller bearings
32312.	NU312	60	130	31	2,1	single-row cylindrical roller bearings
32313.	NU313	65	140	33	2,6	single-row cylindrical roller bearings
32314.	NU314	70	150	35	3,2	single-row cylindrical roller bearings
32315.	NU315	75	160	37	3,52	single-row cylindrical roller bearings
32316.	NU316	80	170	39	4,45	single-row cylindrical roller bearings
32317.	NU317	85	180	41	5,5	single-row cylindrical roller bearings
32318.	NU318	90	190	43	6,1	single-row cylindrical roller bearings
32319.	NU319	95	200	45	7,2	single-row cylindrical roller bearings
32320.	NU320	100	215	47	9	single-row cylindrical roller bearings
32321.	NU321	105	225	49	8,75	single-row cylindrical roller bearings
32322.	NU322	110	240	50	12,5	single-row cylindrical roller bearings
32324.	NU324	120	260	55	15,7	single-row cylindrical roller bearings
32326.	NU326	130	280	58	18,5	single-row cylindrical roller bearings
32328.	NU328	140	300	62	22,9	single-row cylindrical roller bearings
32330.	NU330	150	320	65	27,4	single-row cylindrical roller bearings
32332.	NU332	160	340	68	32,3	single-row cylindrical roller bearings
32334.	NU334	160	360	72	37,7	single-row cylindrical roller bearings
32336.	NU336	180	380	75	45,3	single-row cylindrical roller bearings
32340.	NU340	200	420	80	57,4	single-row cylindrical roller bearings
324.	6324	120	260	55	12,3	single-row deep groove ball bearings
32409.	NU409	45	120	29	1,9	single-row cylindrical roller bearings
32410.	NU410	50	130	31	2,32	single-row cylindrical roller bearings
32412.	NU412	60	150	35	3,36	single-row cylindrical roller bearings
32413.	NU413	65	160	37	4,6	single-row cylindrical roller bearings
32414.	NU414	70	180	42	5,98	single-row cylindrical roller bearings
32416.	NU416	80	200	48	8,71	single-row cylindrical roller bearings
32417.	NU417	85	210	52	10,1	single-row cylindrical roller bearings
32418.	NU418	90	225	54	11,8	single-row cylindrical roller bearings
32419.	NU419	95	240	55	13,8	single-row cylindrical roller bearings
32421.	NU421	105	260	60	17,6	single-row cylindrical roller bearings
32422.	NU422	110	280	65	23	single-row cylindrical roller bearings
32424.	NU424	120	310	72	30,2	single-row cylindrical roller bearings
32426.	NU426	130	340	78	40,3	single-row cylindrical roller bearings
32505.	NU2205	25	52	18	0,19	single-row cylindrical roller bearings
32506.	NU2206	30	62	20	0,31	single-row cylindrical roller bearings
32507.	NU2207	35	72	17	0,35	single-row cylindrical roller bearings
32508.	NU2208	40	80	23	0,56	single-row cylindrical roller bearings
32509.	NU2209	45	85	23	0,54	single-row cylindrical roller bearings
32510.	NU2210	50	90	23	0,58	single-row cylindrical roller bearings
32511.	NU2211	55	100	25	0,78	single-row cylindrical roller bearings

https://nppnovoteh.com

22. CROSS LIST GOST

Bearing No.	Equivalent	Dimensions [mm]			Weight [kg]	Bearing type
		d	D	B		
32512.	NU2212	60	110	28	1,14	single-row cylindrical roller bearings
32513.	NU2213	65	120	31	1,45	single-row cylindrical roller bearings
32514.	NU2214	70	125	31	1,55	single-row cylindrical roller bearings
32515.	NU2215	75	130	31	1,55	single-row cylindrical roller bearings
32516.	NU2216	80	140	33	2,32	single-row cylindrical roller bearings
32517.	NU2217	85	150	36	2,5	single-row cylindrical roller bearings
32518.	NU2218	90	160	40	3,6	single-row cylindrical roller bearings
32519.	NU2219	95	170	43	4,35	single-row cylindrical roller bearings
32520.	NU2220	100	180	46	5,74	single-row cylindrical roller bearings
32524.	NU2224	120	215	58	9,8	single-row cylindrical roller bearings
32532.	NU2232	160	290	80	25	single-row cylindrical roller bearings
3254106.		40	55	19	0,148	needle roller bearings
3254108.		50	68	21	0,251	needle roller bearings
32544.	NU2244	220	400	108	62,5	single-row cylindrical roller bearings
326.	6326	130	280	58	15,2	single-row deep groove ball bearings
32605.	NU2305	25	62	24	0,41	single-row cylindrical roller bearings
32607.	NU2307	35	80	31	0,85	single-row cylindrical roller bearings
32608.	NU2308	40	90	33	1,09	single-row cylindrical roller bearings
32609.	NU2309	45	100	36	1,38	single-row cylindrical roller bearings
32610.	NU2310	50	110	40	2	single-row cylindrical roller bearings
32611.	NU2311	55	120	43	2,15	single-row cylindrical roller bearings
32612.	NU2312	60	130	46	3,16	single-row cylindrical roller bearings
32613.	NU2313	65	140	48	3,65	single-row cylindrical roller bearings
32615.	NU2315	75	160	55	5,8	single-row cylindrical roller bearings
32616.	NU2316	80	170	58	7	single-row cylindrical roller bearings
32617.	NU2317	85	180	60	7,77	single-row cylindrical roller bearings
32619.	NU319	95	200	67	11	single-row cylindrical roller bearings
32622.	NU2322	110	240	80	19,4	single-row cylindrical roller bearings
32624.	NU324	120	260	86	23,8	single-row cylindrical roller bearings
32626.	NU2326	130	280	93	31,9	single-row cylindrical roller bearings
32630.	NU2330	150	320	108	45	single-row cylindrical roller bearings
32634.	NU2334	160	360	120	63,2	single-row cylindrical roller bearings
32725.		125	200	26	3,33	single-row cylindrical roller bearings
32726.		130	250	80	15	single-row cylindrical roller bearings
32731.		155	280	90	30,3	single-row cylindrical roller bearings
3282109.	NNU3009	45	75	23	0,36	double-row cylindrical roller bearings
3282111.	NNU3011	55	90	26	0,59	double-row cylindrical roller bearings
3282112.	NNU3012	60	95	26	0,69	double-row cylindrical roller bearings
3282114.	NNU3014	70	110	30	0,98	double-row cylindrical roller bearings
3282115.	NNU3015	75	115	30	1,03	double-row cylindrical roller bearings
3282116.	NNU3016	80	125	34	1,43	double-row cylindrical roller bearings
3282117.	NNU3017	85	130	34	1,5	double-row cylindrical roller bearings
3282120.	NNU3020	100	150	37	2,26	double-row cylindrical roller bearings
3282124.	NNU3024	120	180	46	3,7	double-row cylindrical roller bearings
3282128.	NNU3028	140	210	53	6,3	double-row cylindrical roller bearings
3282130.	NNU3030	150	225	56	7,57	double-row cylindrical roller bearings
3282134.	NNU3034	170	260	67	12,9	double-row cylindrical roller bearings
3282140.	NNU3040	200	310	82	23,2	double-row cylindrical roller bearings
3282156.	NNU3056	280	420	106	51,5	double-row cylindrical roller bearings
3282168.	NNU3068	340	520	133	100	double-row cylindrical roller bearings
3286208.		40	80	30,2	0,66	double-row angular-contact ball bearings
3286308.		40	90	36,5	1,15	double-row angular-contact ball bearings
3286312.		60	130	54	3,5	double-row angular-contact ball bearings
3286844.		220	270	37	4,65	double-row angular-contact ball bearings
3286848.		240	300	45	7,3	double-row angular-contact ball bearings
32916.		82	122	19	0,78	single-row cylindrical roller bearings
330.	6330	150	320	65	27,6	single-row deep groove ball bearings
330602.		16	30	39	0,246	water pump bearing
330802.		16	30	39	0,228	water pump bearing
330902.		16	30	39	0,25	water pump bearing
3353123.	23026 W33 + H3026	115	200	52	8,4	spherical roller bearings
3353134.	23038 KW33 + H3038	170	290	75	25,3	spherical roller bearings
3353730.	23134 KW33 + H3134	150	280	88	29,5	spherical roller bearings
3353732.	23136 KW33 + H3136	160	300	96	36,5	spherical roller bearings
3353734.	23138 KW33 + H3138	170	320	104	43,8	spherical roller bearings
3353736.	23140 KW33 + H3140	180	340	112	53,9	spherical roller bearings
336104.		20	42	24	0,16	angular-contact radial ball bearings
336106.		30	55	26	0,23	angular-contact radial ball bearings
336122.		110	170	56	3,9	angular-contact radial ball bearings
336317.		85	180	82	9	angular-contact radial ball bearings
336320.		100	215	94	14,1	angular-contact radial ball bearings
34.	634	4	16	5	0,005	single-row deep groove ball bearings
346205.	7205 C-UX x2	25	52	30	0,28	angular-contact radial ball bearings
346206.	7206 A-UX x2	30	62	32	0,38	angular-contact radial ball bearings
346209.	7209 A-UX x2	45	85	38	0,84	angular-contact radial ball bearings

Bearing No.	Equivalent	Dimensions [mm]			Weight [kg]	Bearing type
		d	D	B		
346234.	7234 A-UX x2	170	310	104	33	angular-contact radial ball bearings
346308.	7208 A-UX x2	40	90	46	1,26	angular-contact radial ball bearings
346310.	7310 A-UX x2	50	110	54	2,2	angular-contact radial ball bearings
346312.	7312 A-UX x2	60	130	62	3,52	angular-contact radial ball bearings
346313.	7313 A-UX x2	65	140	66	4,18	angular-contact radial ball bearings
346317.		85	180	82	8,59	angular-contact radial ball bearings
346320.		100	215	94	16,28	angular-contact radial ball bearings
346330.		150	320	130	54,8	angular-contact radial ball bearings
35.	635	5	19	6	0,008	single-row deep groove ball bearings
3508.	22208	40	80	23	0,58	spherical roller bearings
3509.	22209	45	85	23	0,62	spherical roller bearings
3528K.	22228	140	250	68	14,5	spherical roller bearings
3530.	22230	150	270	73	18,1	spherical roller bearings
3532.	22232	160	290	80	23,1	spherical roller bearings
3534.	22234	170	310	86	27,3	spherical roller bearings
353514.	22216 K + H316	70	140	33	3,1	spherical roller bearings
353516.	22218 K + H318	80	160	40	4,79	spherical roller bearings
353522.	22224 K + H3124	110	215	58	11,4	spherical roller bearings
353523.	22226 K + H3126	115	230	64	14,9	spherical roller bearings
3536.	22236	180	320	86	30	spherical roller bearings
353613.	22315 K + H2315	65	160	55	6,28	spherical roller bearings
353614.	22316 K + H2316	70	170	58	7,54	spherical roller bearings
353618.	22320 K + 2320	90	215	73	14,8	spherical roller bearings
3538.	22238	190	340	92	37	spherical roller bearings
3540.	22240	200	360	98	45	spherical roller bearings
3544.	22244	220	400	108	63	spherical roller bearings
3552.	22252	260	480	130	104	spherical roller bearings
3556.	22256	280	500	130	104	spherical roller bearings
3564.	22264	320	580	150	186	spherical roller bearings
3572.	22272	360	650	175	259	spherical roller bearings
3580.	22280	400	720	180	342	spherical roller bearings
3609.	22309	45	100	36	1,4	spherical roller bearings
36100.	7000 C	10	26	8	0,039	angular-contact radial ball bearings
36101.	7001 C	12	28	8	0,021	angular-contact radial ball bearings
36102.	7002 C	15	32	9	0,033	angular-contact radial ball bearings
36103.	7003 C	17	35	10	0,04	angular-contact radial ball bearings
36104.	7004 C	20	42	12	0,068	angular-contact radial ball bearings
36105.	7005 C	25	47	12	0,122	angular-contact radial ball bearings
36106.	7006 C	30	55	13	0,195	angular-contact radial ball bearings
36107.	7007 C	35	62	14	0,25	angular-contact radial ball bearings
36108.	7008 C	40	68	15	0,195	angular-contact radial ball bearings
36109.	7009 C	45	75	16	0,25	angular-contact radial ball bearings
36110.	7010 C	50	80	16	0,27	angular-contact radial ball bearings
36111.	7011 C	55	90	18	0,39	angular-contact radial ball bearings
36112.	7012 C	60	95	18	0,42	angular-contact radial ball bearings
36113.	7013 C	65	100	18	0,45	angular-contact radial ball bearings
36114.	7014 C	70	110	20	0,62	angular-contact radial ball bearings
36115.	7015 C	75	115	20	0,65	angular-contact radial ball bearings
36116.	7016 C	80	125	22	0,87	angular-contact radial ball bearings
36117.	7017 C	85	130	22	0,91	angular-contact radial ball bearings
36118.	7018 C	90	140	24	1,19	angular-contact radial ball bearings
36120.	7020 C	100	150	24	1,29	angular-contact radial ball bearings
36121.	7021 C	105	160	26	1,58	angular-contact radial ball bearings
36201.	7201 C	12	32	10	0,01	angular-contact radial ball bearings
36202.	7202 C	15	35	11	0,04	angular-contact radial ball bearings
36203.	7203 C	17	40	12	0,06	angular-contact radial ball bearings
36204.	7204 C	20	47	14	0,09	angular-contact radial ball bearings
36205.	7205 C	25	52	15	0,122	angular-contact radial ball bearings
36206.	7206 C	30	62	16	0,19	angular-contact radial ball bearings
36207.	7207 C	35	72	17	0,27	angular-contact radial ball bearings
36208.	7208 C	40	80	18	0,37	angular-contact radial ball bearings
36209.	7209 C	45	85	19	0,42	angular-contact radial ball bearings
36210.	7210 C	50	90	20	0,47	angular-contact radial ball bearings
36212.	7212 C	60	110	22	0,77	angular-contact radial ball bearings
36214.	7214 C	70	125	24	1,1	angular-contact radial ball bearings
36216.	7216 C	80	140	26	1,44	angular-contact radial ball bearings
36217.	7217 C	85	150	28	1,8	angular-contact radial ball bearings
36218.	7218 C	90	160	30	2,2	angular-contact radial ball bearings
36219.	7219 C	95	170	32	2,63	angular-contact radial ball bearings
36220.	7220 C	100	180	34	3,28	angular-contact radial ball bearings
3624.	22324	120	260	86	24	spherical roller bearings
3626K.	22326	130	280	93	28,9	spherical roller bearings
3628K.	22328	140	300	102	36	spherical roller bearings
3630.	22330	150	320	108	43,6	spherical roller bearings
36300.	7300 C	10	35	11	0,052	angular-contact radial ball bearings

https://nppnovoteh.com

22. CROSS LIST GOST

Bearing No.	Equivalent	Dimensions [mm]			Weight [kg]	Bearing type
		d	D	B		
36302.	7302 C	15	42	13	0,09	angular-contact radial ball bearings
36303.	7303 C	17	47	14	0,11	angular-contact radial ball bearings
36308.	7308 C	40	90	23	0,63	angular-contact radial ball bearings
36318.	7318 C	90	190	43	5	angular-contact radial ball bearings
3632.	22332	160	340	114	51,5	spherical roller bearings
3634.	22334	170	360	120	60,4	spherical roller bearings
3636.	22336	180	380	126	70,1	spherical roller bearings
3638.	22338	190	400	132	81,5	spherical roller bearings
3640.	22340	200	420	138	94	spherical roller bearings
3644.	22344	220	460	145	128	spherical roller bearings
3652.	22352	260	540	165	190	spherical roller bearings
3656.	22356	280	580	175	235	spherical roller bearings
366156.		280	420	130	64,2	angular-contact radial ball bearings
366203.		17	40	24	0,14	angular-contact radial ball bearings
366210.	7210 B-UX x2	50	90	40	0,97	angular-contact radial ball bearings
366222.	7322 B-UX x2	110	240	100	22,3	angular-contact radial ball bearings
366318.	7318 B-UX x2	90	190	86	5,34	angular-contact radial ball bearings
366326.	7326 B-UX x2	130	280	108	36,7	angular-contact radial ball bearings
366340.		200	420	160	114	angular-contact radial ball bearings
366408.		40	110	54	2,74	angular-contact radial ball bearings
366412.		60	150	70	7,04	angular-contact radial ball bearings
3680.	22380	400	820	243	641	spherical roller bearings
3738.		190	280	67	15	spherical roller bearings
3744.		220	365	120	54	spherical roller bearings
3753234.		170	320	112	44	spherical roller bearings
3753732.	23134 KW33 + AH3134	160	280	88	24,5	spherical roller bearings
3753734.	23136 KW33 + AH3136	170	300	96	31,2	spherical roller bearings
3753736.	23138 KW33 + AH3138	180	320	104	37,9	spherical roller bearings
3756.		280	410	98	46,9	spherical roller bearings
3756205.		25	52	20,6	0,2	double-row angular-contact ball bearings
3756206.		30	62	23,8	0,32	double-row angular-contact ball bearings
376.		340	500	120	82,3	spherical roller bearings
3760.		300	440	105	58,2	spherical roller bearings
380707.		35	85	23	0,7	water pump bearing
38204.	52204	20	40	26	0,15	thrust ball bearings
38205.	52205	25	47	28	0,23	thrust ball bearings
38206.	52206	30	52	29	0,27	thrust ball bearings
38207.	52207	35	62	34	0,42	thrust ball bearings
38208.	52208	40	68	36	0,54	thrust ball bearings
38209.	52209	45	73	37	0,62	thrust ball bearings
38210.	52210	50	78	39	0,74	thrust ball bearings
38211.	52211	55	90	45	1,12	thrust ball bearings
38212.	52212	60	95	46	1,23	thrust ball bearings
38214.	52214	70	105	47	1,48	thrust ball bearings
38216.	52216	80	115	48	1,7	thrust ball bearings
38217.	52217	85	125	55	2,3	thrust ball bearings
38224.	52224	120	170	68	5	thrust ball bearings
38236.	52236	180	250	98	16	thrust ball bearings
38316.	52316	80	140	79	5,2	thrust ball bearings
3844.		220	320	76	21	spherical roller bearings
402310.		50	110	27	1,11	single-row cylindrical roller bearings
402311.		55	120	29	1,44	single-row cylindrical roller bearings
402312.		60	130	31	2,06	single-row cylindrical roller bearings
402318.		90	190	43	5,99	single-row cylindrical roller bearings
4024103.		24	35	18	0,07	needle roller bearings
4024104.		28	42	22	0,12	needle roller bearings
4024105.		34	47	22	0,13	needle roller bearings
4024106.		40	55	25	0,2	needle roller bearings
4024107.		46	62	27	0,27	needle roller bearings
4024108.		52	68	28	0,31	needle roller bearings
4024109.		58	75	30	0,39	needle roller bearings
4024110.		62	80	30	0,44	needle roller bearings
4024111.		70	90	35	0,6	needle roller bearings
4024112.		75	95	35	0,69	needle roller bearings
4024113.		80	100	35	0,72	needle roller bearings
4024114.		80	110	40	1,04	needle roller bearings
4024115.		92	115	40	1,1	needle roller bearings
4024116.		100	125	45	1,46	needle roller bearings
4024903.		22	30	13	0,033	needle roller bearings
4024905.		30	42	17	0,084	needle roller bearings
4024918.		105	125	35	0,93	needle roller bearings
4024919.		110	130	35	0,96	needle roller bearings
4024920.		115	140	40	1,47	needle roller bearings
4024922.		125	150	40	1,57	needle roller bearings
4024924.		140	165	45	1,99	needle roller bearings

Bearing No.	Equivalent	Dimensions [mm]			Weight [kg]	Bearing type
		d	D	B		
4024926.		150	180	50	2,74	needle roller bearings
4024928.		160	190	50	3,27	needle roller bearings
4024932.		185	220	60	4,51	needle roller bearings
402715.		75	160	45	3,54	single-row cylindrical roller bearings
403.	6403	17	62	17	0,27	single-row deep groove ball bearings
404.	6404	20	72	19	0,4	single-row deep groove ball bearings
405.	6405	25	80	21	0,5	single-row deep groove ball bearings
406.	6406	30	90	23	0,72	single-row deep groove ball bearings
407.	6407	35	100	25	0,93	single-row deep groove ball bearings
4074103.		17	35	18	0,1	needle roller bearings
4074104.		20	42	22	0,19	needle roller bearings
4074105.		22	47	22	0,2	needle roller bearings
4074106.		30	55	25	0,3	needle roller bearings
4074107.		35	62	27	0,42	needle roller bearings
4074108.		40	68	28	0,5	needle roller bearings
4074109.		45	75	30	0,63	needle roller bearings
4074110.		50	80	30	0,69	needle roller bearings
4074111.		55	90	35	0,97	needle roller bearings
4074112.		60	95	35	1,11	needle roller bearings
4074113.		65	100	35	1,19	needle roller bearings
4074114.		70	110	40	1,74	needle roller bearings
4074115.		75	115	40	1,8	needle roller bearings
4074116.		80	125	45	2,46	needle roller bearings
4074117.		85	130	45	2,58	needle roller bearings
4074904.		20	37	17	0,09	needle roller bearings
4074905.		22	42	17	0,11	needle roller bearings
4074907.		35	55	20	0,21	needle roller bearings
4074912.		60	85	25	0,53	needle roller bearings
4074913.		65	90	25	0,56	needle roller bearings
4074915.		75	105	30	0,87	needle roller bearings
4074916.		80	110	30	1	needle roller bearings
4074917.		85	120	35	1,49	needle roller bearings
4074918.		90	125	35	1,55	needle roller bearings
4074919.		95	130	35	1,61	needle roller bearings
4074920.		100	140	40	2,29	needle roller bearings
4074922.		110	150	40	2,4	needle roller bearings
4074924.		120	165	45	3,43	needle roller bearings
4074926.		130	180	50	4,44	needle roller bearings
4074928.		140	190	50	5,11	needle roller bearings
4074930.		150	210	60	7,07	needle roller bearings
408.	6408	40	110	27	1,2	single-row deep groove ball bearings
4084104.		28,7	42	22	0,119	needle roller bearings
4084106.		40,1	55	25	0,201	needle roller bearings
4084107.		45,9	62	27	0,271	needle roller bearings
4084110.		62,1	80	30	0,439	needle roller bearings
409.	6409	45	120	29	1,52	single-row deep groove ball bearings
410.	6410	50	130	31	1,91	single-row deep groove ball bearings
411.	6411	55	140	33	2,3	single-row deep groove ball bearings
412.	6412	60	150	35	2,8	single-row deep groove ball bearings
413.	6413	65	160	37	3,4	single-row deep groove ball bearings
414.	6414	70	180	42	5,3	single-row deep groove ball bearings
416.	6416	80	200	48	7	single-row deep groove ball bearings
4162920.		100	140	40	1,88	double-row cylindrical roller bearings
4162938.		190	260	69	9,85	double-row cylindrical roller bearings
417.	6417	85	210	52	8	single-row deep groove ball bearings
4202192.		460	680	218	288	double-row cylindrical roller bearings
42130.		150	225	35	5,05	single-row cylindrical roller bearings
42144.	NJ1044	220	340	56	18,9	single-row cylindrical roller bearings
42152.	NJ1052	260	400	65	30,9	single-row cylindrical roller bearings
42202.	NJ202	15	35	11	0,05	single-row cylindrical roller bearings
42203.	NJ203	17	40	12	0,06	single-row cylindrical roller bearings
42204.	NJ204	20	47	14	0,13	single-row cylindrical roller bearings
42205.	NJ205	25	52	15	0,15	single-row cylindrical roller bearings
42205.	NJ2205	25	52	18	0,16	single-row cylindrical roller bearings
42206.	NJ206	30	62	16	0,24	single-row cylindrical roller bearings
42207.	NJ207	35	72	17	0,35	single-row cylindrical roller bearings
42208.	NJ208	40	80	18	0,4	single-row cylindrical roller bearings
42209.	NJ209	45	85	19	0,49	single-row cylindrical roller bearings
42210.	NJ210	50	90	20	0,57	single-row cylindrical roller bearings
42211.	NJ211	55	100	21	0,76	single-row cylindrical roller bearings
42212.	NJ212	60	110	22	0,95	single-row cylindrical roller bearings
42213.	NJ213	65	120	23	1,2	single-row cylindrical roller bearings
42215.	NJ215	75	130	25	1,4	single-row cylindrical roller bearings
42216.	NJ216	80	140	26	1,8	single-row cylindrical roller bearings
42217.	NJ217	85	150	28	2,27	single-row cylindrical roller bearings

https://nppnovoteh.com

22. CROSS LIST GOST

Bearing No.	Equivalent	Dimensions [mm]			Weight [kg]	Bearing type
		d	D	B		
42218.	NJ218	90	160	38	2,8	single-row cylindrical roller bearings
42219.	NJ219	95	170	36	2,9	single-row cylindrical roller bearings
42221.	NJ221	105	190	32	5	single-row cylindrical roller bearings
42222.	NJ222	110	200	38	6	single-row cylindrical roller bearings
42224.	NJ224	120	215	40	6,6	single-row cylindrical roller bearings
42226.	NJ226	130	230	40	7,5	single-row cylindrical roller bearings
42228.	NJ228	140	250	42	9,6	single-row cylindrical roller bearings
42230.	NJ230	150	270	45	12,4	single-row cylindrical roller bearings
42232.	NJ232	160	290	48	14,5	single-row cylindrical roller bearings
42234.	NJ234	160	310	52	18,3	single-row cylindrical roller bearings
42236.	NJ236	180	320	86	31,7	single-row cylindrical roller bearings
42240.	NJ240	200	360	58	28	single-row cylindrical roller bearings
42244.	NJ244	220	400	65	39	single-row cylindrical roller bearings
42305.	NJ305	25	62	17	0,3	single-row cylindrical roller bearings
42306.	NJ306	30	72	19	0,4	single-row cylindrical roller bearings
42307.	NJ307	35	80	21	0,55	single-row cylindrical roller bearings
42308.	NJ308	40	90	23	0,78	single-row cylindrical roller bearings
42309.	NJ309	45	100	25	1	single-row cylindrical roller bearings
42310.	NJ310	50	110	27	1,35	single-row cylindrical roller bearings
42311.	NJ311	55	120	29	1,7	single-row cylindrical roller bearings
42312.	NJ312	60	130	31	2,1	single-row cylindrical roller bearings
42313.	NJ313	65	140	33	2,6	single-row cylindrical roller bearings
42314.	NJ314	70	150	35	3,2	single-row cylindrical roller bearings
42315.	NJ315	75	160	37	3,52	single-row cylindrical roller bearings
42316.	NJ316	80	170	39	4,45	single-row cylindrical roller bearings
42317.	NJ317	85	180	41	5,5	single-row cylindrical roller bearings
42318.	NJ318	90	190	43	6,1	single-row cylindrical roller bearings
42319.	NJ319	95	200	45	7,2	single-row cylindrical roller bearings
42320.	NJ320	100	215	47	9	single-row cylindrical roller bearings
42322.	NJ322	110	240	50	12,5	single-row cylindrical roller bearings
42324.	NJ324	120	260	55	15,7	single-row cylindrical roller bearings
42326.	NJ326	130	280	58	18,5	single-row cylindrical roller bearings
42328.	NJ328	140	300	62	22,9	single-row cylindrical roller bearings
42330.	NJ330	150	320	65	27,4	single-row cylindrical roller bearings
42336.	NJ336	180	380	75	45,3	single-row cylindrical roller bearings
42409.	NJ409	45	120	29	1,9	single-row cylindrical roller bearings
42410.	NJ410	50	130	31	2,32	single-row cylindrical roller bearings
42411.	NJ411	55	140	33	2,9	single-row cylindrical roller bearings
42412.	NJ412	60	150	35	3,36	single-row cylindrical roller bearings
42413.	NJ413	65	160	37	4,6	single-row cylindrical roller bearings
42415.	NJ415	75	190	45	7,22	single-row cylindrical roller bearings
42417.	NJ417	85	210	52	10,1	single-row cylindrical roller bearings
42420.	NJ420	100	250	58	16,3	single-row cylindrical roller bearings
42422.	NJ422	110	280	65	23	single-row cylindrical roller bearings
42426.	NJ426	130	340	78	40,3	single-row cylindrical roller bearings
42428.	NJ428	140	360	82	48,8	single-row cylindrical roller bearings
4244901.	NA4901	12	24	13	0,03	needle roller bearings
4244903.	NA4903	17	30	13	0,04	needle roller bearings
4244905.	NA4905	22	42	17	0,09	needle roller bearings
4244906.	NA4906	30	47	17	0,1	needle roller bearings
4244909.	NA4909	45	68	22	0,27	needle roller bearings
4244910.	NA4910	50	72	22	0,3	needle roller bearings
4244911.	NA4911	55	80	25	0,43	needle roller bearings
4244914.	NA4914	70	100	30	0,78	needle roller bearings
42504.	NJ2204	20	47	18	0,14	single-row cylindrical roller bearings
42506.	NJ2206	30	62	20	0,31	single-row cylindrical roller bearings
42507.	NJ2207	35	72	23	0,48	single-row cylindrical roller bearings
42511.	NJ2211	55	100	25	0,78	single-row cylindrical roller bearings
42516.	NJ2216	80	140	33	2,32	single-row cylindrical roller bearings
42520.	NJ2220	100	180	46	5,74	single-row cylindrical roller bearings
42524.	NJ2224	120	215	58	9,8	single-row cylindrical roller bearings
42526.	NJ2226	130	230	64	12	single-row cylindrical roller bearings
42532.	NJ2232	160	290	80	25	single-row cylindrical roller bearings
42536.	NU2236	180	320	86	31,7	single-row cylindrical roller bearings
4254706.	NKS35	35	50	22	0,11	needle roller bearings
4254714.	NKS75	75	95	28	0,4	needle roller bearings
4254901.		16	24	13	0,02	needle roller bearings
4254902.		20	28	13	0,021	needle roller bearings
4254903.	RNA4903	22	30	13	0,02	needle roller bearings
4254904.		25	37	17	0,071	needle roller bearings
4254905.	RNA4905	30	42	17	0,06	needle roller bearings
4254906.	RNA4906	35	47	17	0,071	needle roller bearings
4254909.	NKS50	50	65	22	0,15	needle roller bearings
4254909.	RNA4909	52	68	22	0,18	needle roller bearings
42606.	NJ2306	30	72	27	0,71	single-row cylindrical roller bearings

Bearing No.	Equivalent	Dimensions [mm]			Weight [kg]	Bearing type
		d	D	B		
42607.	NJ2307	35	80	31	0,85	single-row cylindrical roller bearings
42612.	NJ2312	60	130	46	3,16	single-row cylindrical roller bearings
42613.	NJ2313	65	140	48	3,65	single-row cylindrical roller bearings
42614.	NJ2314	70	150	51	4,53	single-row cylindrical roller bearings
42615.	NJ2315	75	160	55	5,8	single-row cylindrical roller bearings
42616.	NJ2316	80	170	58	7	single-row cylindrical roller bearings
42618.	NJ2318	90	190	64	8,9	single-row cylindrical roller bearings
42620.	NJ2320	100	215	73	14	single-row cylindrical roller bearings
4262188.		440	650	212	245	double-row cylindrical roller bearings
42622.	NJ2322	110	240	80	19,4	single-row cylindrical roller bearings
42624.	NJ324	120	260	86	23,8	single-row cylindrical roller bearings
42626.	NJ2326	130	280	93	31,9	single-row cylindrical roller bearings
42629/530.		530	710	180	219	double-row cylindrical roller bearings
42629/710.		710	950	243	504	double-row cylindrical roller bearings
42630.	NJ2330	150	320	108	45	single-row cylindrical roller bearings
42726.		130	250	64	19	single-row cylindrical roller bearings
42728.		140	260	64	22	single-row cylindrical roller bearings
42822.		110	215	76	13,3	single-row cylindrical roller bearings
436101.	7001 C-UD x2	12	28	16	0,045	angular-contact radial ball bearings
436105.	7005 C-UD x2	25	47	24	0,16	angular-contact radial ball bearings
436106.	7006 C-UD x2	30	55	26	0,23	angular-contact radial ball bearings
436107.	7007 C-UD x2	35	62	28	0,3	angular-contact radial ball bearings
436110.	7210 C-UD x2	50	80	32	0,52	angular-contact radial ball bearings
436111.	7011 C-UD x2	55	90	36	0,76	angular-contact radial ball bearings
436112.	7012 C-UD x2	60	95	36	0,81	angular-contact radial ball bearings
436113.	7013 C-UD x2	65	100	36	0,87	angular-contact radial ball bearings
436114.	7014 C-UD x2	70	110	40	1,2	angular-contact radial ball bearings
436116.	7016 C-UD x2	80	125	44	1,68	angular-contact radial ball bearings
436117.	7017 C-UD x2	85	130	44	1,76	angular-contact radial ball bearings
436118.	7018 C-UD x2	90	140	48	2,28	angular-contact radial ball bearings
436126.	7026 C-UD x2	130	200	66	6,5	angular-contact radial ball bearings
436201.	7201 C-UD x2	12	32	20	0,08	angular-contact radial ball bearings
436203.	7203 C-UD x2	17	40	24	0,125	angular-contact radial ball bearings
436204.	7204 C-UD x2	20	47	28	0,2	angular-contact radial ball bearings
436205.	7205 C-UD x2	25	52	30	0,244	angular-contact radial ball bearings
436206.	7206 C-UD x2	30	62	32	0,39	angular-contact radial ball bearings
436207.	7207 C-UD x2	35	72	34	0,57	angular-contact radial ball bearings
436208.	7208 C-UD x2	40	80	36	0,74	angular-contact radial ball bearings
436209.	7209 C-UD x2	45	85	38	0,84	angular-contact radial ball bearings
436210.	7210 C-UD x2	50	90	40	0,94	angular-contact radial ball bearings
436211.	7211 C-UD x2	55	100	42	1,2	angular-contact radial ball bearings
436212.	7212 C-UD x2	60	110	44	1,54	angular-contact radial ball bearings
436213.	7213 C-UD x2	65	120	46	1,96	angular-contact radial ball bearings
436214.	7214 C-UD x2	70	125	48	2,14	angular-contact radial ball bearings
436215.	7215 C-UD x2	75	130	50	2,78	angular-contact radial ball bearings
4427/500.		500	720	265	744	four-row cylindrical roller bearings
442860.		300	500	180	304	four-row cylindrical roller bearings
446202.	7202 A-UD x2	15	35	22	0,09	angular-contact radial ball bearings
446206.	7206 A-UD x2	30	62	32	0,46	angular-contact radial ball bearings
446207.	7207 A-UD x2	35	72	34	0,57	angular-contact radial ball bearings
446208.	7208 A-UD x2	40	80	36	0,74	angular-contact radial ball bearings
446209.	7209 A-UD x2	45	85	38	0,84	angular-contact radial ball bearings
446210.	7210 A-UD x2	50	90	40	0,94	angular-contact radial ball bearings
446211.	7211 A-UD x2	55	100	42	1,2	angular-contact radial ball bearings
446212.	7212 A-UD x2	60	110	44	1,52	angular-contact radial ball bearings
446213.	7213 A-UD x2	65	120	46	1,98	angular-contact radial ball bearings
446215.	7215 A-UD x2	75	130	50	2,56	angular-contact radial ball bearings
446216.	7216 A-UD x2	80	140	52	3,36	angular-contact radial ball bearings
446220.	7220 A-UD x2	100	180	68	6,55	angular-contact radial ball bearings
446305.	7305 A-UD x2	25	62	34	0,57	angular-contact radial ball bearings
446306.	7306 A-UD x2	30	72	38	0,8	angular-contact radial ball bearings
446307.	7307 A-UD x2	35	80	42	0,93	angular-contact radial ball bearings
446308.	7308 A-UD x2	40	90	46	1,26	angular-contact radial ball bearings
446311.	7311 A-UD x2	55	120	58	2,84	angular-contact radial ball bearings
446312.	7312 A-UD x2	60	130	62	3,52	angular-contact radial ball bearings
446318.	7318 A-UD x2	90	190	86	10	angular-contact radial ball bearings
446330.		150	320	130	54,8	angular-contact radial ball bearings
45.		4,5	8	2,5	0,004	single-row deep groove ball bearings
460706.		30	79	22	0,42	single-row deep groove ball bearings
46106.	7006 A	30	55	13	0,18	angular-contact radial ball bearings
46107.	7007 A	35	62	14	0,16	angular-contact radial ball bearings
46108.	7008 A	40	68	15	0,22	angular-contact radial ball bearings
46109.	7009 A	45	75	16	0,24	angular-contact radial ball bearings
46110.	7010 A	50	80	16	0,27	angular-contact radial ball bearings
46111.	7011 A	55	90	18	0,44	angular-contact radial ball bearings

https://nppnovoteh.com

22. CROSS LIST GOST

Bearing No.	Equivalent	Dimensions [mm]			Weight [kg]	Bearing type
		d	D	B		
46112.	7012 A	60	95	18	0,47	angular-contact radial ball bearings
46113.	7013 A	65	100	18	0,45	angular-contact radial ball bearings
46114.	7014 A	70	110	20	0,72	angular-contact radial ball bearings
46115.	7015 A	75	115	20	0,77	angular-contact radial ball bearings
46116.	7016 A	80	125	22	1	angular-contact radial ball bearings
46117.	7017 A	85	130	22	1,04	angular-contact radial ball bearings
46118.	7018 A	90	140	24	1,19	angular-contact radial ball bearings
46120.	7020 A	100	150	24	1,56	angular-contact radial ball bearings
46121.	7021 A	105	160	26	1,85	angular-contact radial ball bearings
46122.	7022 A	110	170	28	2,41	angular-contact radial ball bearings
46202.	7202 A	15	35	11	0,045	angular-contact radial ball bearings
46203.	7203 A	17	40	12	0,063	angular-contact radial ball bearings
46204.	7204 A	20	47	14	0,1	angular-contact radial ball bearings
46205.	7205 A	25	52	15	0,144	angular-contact radial ball bearings
46206.	7206 A	30	62	16	0,232	angular-contact radial ball bearings
46207.	7207 A	35	72	17	0,289	angular-contact radial ball bearings
46208.	7208 A	40	80	18	0,37	angular-contact radial ball bearings
46209.	7209 A	45	85	19	0,4	angular-contact radial ball bearings
46210.	7210 A	50	90	20	0,46	angular-contact radial ball bearings
46211.	7211 A	55	100	21	0,59	angular-contact radial ball bearings
46212.	7212 A	60	110	22	0,93	angular-contact radial ball bearings
46213.	7213 A	65	120	23	1	angular-contact radial ball bearings
46215.	7215 C	75	130	25	1,28	angular-contact radial ball bearings
46216.	7215 A	80	140	26	1,68	angular-contact radial ball bearings
46217.	7217 A	85	150	28	1,82	angular-contact radial ball bearings
46218.	7218 A	90	160	30	2,22	angular-contact radial ball bearings
46220.	7220 A	100	180	34	3,88	angular-contact radial ball bearings
46222.	7222 A	110	200	38	5,5	angular-contact radial ball bearings
462222.	7222 A-UX x2	110	240	76	11	angular-contact radial ball bearings
46303.	7303 A	17	47	14	0,11	angular-contact radial ball bearings
46304.	7304 A	20	52	15	0,17	angular-contact radial ball bearings
46305.	7305 A	25	62	17	0,23	angular-contact radial ball bearings
46306.	7306 A	30	72	19	0,402	angular-contact radial ball bearings
46307.	7307 A	35	80	21	0,542	angular-contact radial ball bearings
46308.	7308 A	40	90	23	0,747	angular-contact radial ball bearings
46309.	7309 A	45	100	25	0,86	angular-contact radial ball bearings
46310.	7310 A	50	110	27	1,32	angular-contact radial ball bearings
46311.	7311 A	55	120	29	1,45	angular-contact radial ball bearings
46312.	7312 A	60	130	31	1,71	angular-contact radial ball bearings
46313.	7313 A	65	140	33	2,65	angular-contact radial ball bearings
46314.	7314 A	70	150	35	3,3	angular-contact radial ball bearings
46316.	7316 A	80	170	39	4,26	angular-contact radial ball bearings
46318.	7318 A	90	190	43	5	angular-contact radial ball bearings
46320.	7320 A	100	215	47	8,14	angular-contact radial ball bearings
464068.		8	12	12	0,007	needle roller and cage assemblies
46416.	7416 A	80	200	48	7,25	angular-contact radial ball bearings
46418.	7418 A	90	225	54	12	angular-contact radial ball bearings
464701.		12	17	12	0,009	needle roller and cage assemblies
464702.		15	20	12	0,015	needle roller and cage assemblies
464703.		17	22	20	0,027	needle roller and cage assemblies
464704.		20	25	20	0,031	needle roller and cage assemblies
464705.		25	30	25	0,04	needle roller and cage assemblies
464706.		30	36	25	0,062	needle roller and cage assemblies
464707.		35	40	25	0,071	needle roller and cage assemblies
464708.		8	11	9,8	0,004	needle roller and cage assemblies
464708.		40	46	25	0,077	needle roller and cage assemblies
464904.		19,3	25,3	19,8	0,014	needle roller and cage assemblies
464905.		24	28	9,8	0,013	needle roller and cage assemblies
464906.		32	37,6	13	0,012	needle roller and cage assemblies
464907.		37	42	22	0,022	needle roller and cage assemblies
466130.		150	225	70	9,8	angular-contact radial ball bearings
466203.	7203 B-UD x2	17	40	24	0,14	angular-contact radial ball bearings
466230.		150	270	90	28,4	angular-contact radial ball bearings
466305.	7305 B-UD x2	25	62	34	0,5	angular-contact radial ball bearings
466307.	7307 B-UD x2	35	80	42	0,97	angular-contact radial ball bearings
466309.	7309 B-UD x2	45	100	50	1,79	angular-contact radial ball bearings
466311.	7311 B-UD x2	55	120	58	3	angular-contact radial ball bearings
466315.	7315 B-UD x2	75	160	74	7,1	angular-contact radial ball bearings
466322.	7322 B-UD x2	110	240	100	22,3	angular-contact radial ball bearings
466330.	7330 B-UD x2	150	320	130	48,2	angular-contact radial ball bearings
466409.		45	120	58	3,5	angular-contact radial ball bearings
466412.		60	150	70	7	angular-contact radial ball bearings
466432.		160	400	176	124	angular-contact radial ball bearings
4753740.		200	370	150	78,9	spherical roller bearings
477752.		260	440	87	195	four-row tapered roller bearings

Bearing No.	Equivalent	Dimensions [mm]			Weight [kg]	Bearing type
		d	D	B		
477756.		280	420	72	141	four-row tapered roller bearings
477780.		400	540	72	174	four-row tapered roller bearings
480206.		30	62	18	0,33	single-row deep groove ball bearings
48324.		160	220	143	23	thrust ball bearings
48479/750.		750	1000	250	566	double-row tapered roller bearings
49742.		210/212	460	150	132	tapered roller thrust bearings
49768.		340	640	140	291	tapered roller thrust bearings
50104.	6004 N	20	42	12	0,07	single-row deep groove ball bearings
50105.	6005 N	20	47	12	0,08	single-row deep groove ball bearings
50106.	6006 N	30	55	13	0,12	single-row deep groove ball bearings
50107.	6007 N	35	62	14	0,16	single-row deep groove ball bearings
50108.	6008 N	40	68	15	0,21	single-row deep groove ball bearings
50115.	6015 N	75	115	20	0,64	single-row deep groove ball bearings
50202.	6202 N	15	35	11	0,05	single-row deep groove ball bearings
50203.	6203 N	17	40	12	0,06	single-row deep groove ball bearings
50204.	6204 N	20	47	14	0,1	single-row deep groove ball bearings
50205.	6304 N	25	52	15	0,01	single-row deep groove ball bearings
50206.	6206 N	30	62	16	0,19	single-row deep groove ball bearings
50207.	6207 N	35	72	17	0,28	single-row deep groove ball bearings
50208.	6208 N	40	80	18	0,36	single-row deep groove ball bearings
50209.	6209 N	45	85	19	0,4	single-row deep groove ball bearings
50210.	6210 N	50	90	20	0,44	single-row deep groove ball bearings
50211.	6211 N	55	100	21	0,5	single-row deep groove ball bearings
502111.		55	85	18	0,33	single-row cylindrical roller bearings
50212.	6212 N	60	110	22	0,78	single-row deep groove ball bearings
50213.	6213 N	65	120	23	0,96	single-row deep groove ball bearings
50216.	6216 N	80	140	26	1,37	single-row deep groove ball bearings
50217.	6217 N	85	150	28	1,77	single-row deep groove ball bearings
50218.	6218 N	90	160	30	2,12	single-row deep groove ball bearings
502207.		35	61,8	17	0,21	single-row cylindrical roller bearings
502208.		40	70	18	0,24	single-row cylindrical roller bearings
502212.		60	97,5	22	0,51	single-row cylindrical roller bearings
502220.		100	160	34	2,65	single-row cylindrical roller bearings
502308.		40	77,5	23	0,36	single-row cylindrical roller bearings
502309.		45	86,5	25	0,61	single-row cylindrical roller bearings
502310.		50	95	27	0,79	single-row cylindrical roller bearings
50300.	6300 N	10	35	11	0,05	single-row deep groove ball bearings
50303.	6303 N	17	47	14	0,11	single-row deep groove ball bearings
50304.	6304 N	20	52	15	0,14	single-row deep groove ball bearings
50305.	6305 N	25	62	17	0,23	single-row deep groove ball bearings
50306.	6306 N	30	72	19	0,35	single-row deep groove ball bearings
50307.	6307 N	35	80	21	0,43	single-row deep groove ball bearings
50308.	6308 N	40	90	23	0,63	single-row deep groove ball bearings
50309.	6309 N	45	100	25	0,79	single-row deep groove ball bearings
50310.	6310 N	50	110	27	1,06	single-row deep groove ball bearings
50311.	6311 N	55	120	29	1,33	single-row deep groove ball bearings
50312.	6312 N	60	130	31	1,68	single-row deep groove ball bearings
50313.	6313 N	65	140	33	2,1	single-row deep groove ball bearings
50314.	6314 N	70	150	35	2,5	single-row deep groove ball bearings
50315.	6315 N	75	160	37	3	single-row deep groove ball bearings
50316.	6316 N	80	170	39	3,45	single-row deep groove ball bearings
50406.	6406 N	30	90	23	0,72	single-row deep groove ball bearings
50407.	6407 N	35	100	25	0,92	single-row deep groove ball bearings
50408.	6408 N	40	110	27	1,17	single-row deep groove ball bearings
50409.	6409 N	45	120	29	1,5	single-row deep groove ball bearings
50410.	6410 N	50	130	31	1,88	single-row deep groove ball bearings
50411.	6411 N	55	140	33	2,28	single-row deep groove ball bearings
50412.	6412 N	60	150	35	2,8	single-row deep groove ball bearings
50414.	6414 N	70	180	42	5,3	single-row deep groove ball bearings
50416.	6416 N	80	200	48	7	single-row deep groove ball bearings
504704.		20	52	46	0,46	combined cylindrical roller bearings
504705.		25	57	50	0,58	combined cylindrical roller bearings
504706.		30	62	50	0,66	combined cylindrical roller bearings
504707.		35	70	54	0,88	combined cylindrical roller bearings
504708.		40	75	54	0,99	combined cylindrical roller bearings
504709.		45	80	60	1,23	combined cylindrical roller bearings
504710.		50	90	60	1,58	combined cylindrical roller bearings
504905.		25	72	60	1,29	combined cylindrical roller bearings
504906.		30	80	66	1,65	combined cylindrical roller bearings
504907.		35	85	66	1,82	combined cylindrical roller bearings
504909.		45	105	82	3,3	combined cylindrical roller bearings
504910.		50	110	82	3,63	combined cylindrical roller bearings
504911.		55	115	82	3,6	combined cylindrical roller bearings
504912.		60	120	82	4,1	combined cylindrical roller bearings
504914.		70	130	82	4,5	combined cylindrical roller bearings

22. CROSS LIST GOST

Bearing No.	Equivalent	Dimensions [mm]			Weight [kg]	Bearing type
		d	D	B		
50705.		25	57	23,8	0,28	double-row angular-contact ball bearings
50706.		30	75	19	0,39	single-row deep groove ball bearings
520110.		50	80	16	0,3	single-row deep groove ball bearings
520118.		90	140	24	1,15	single-row deep groove ball bearings
520806.		30	62	20	0,21	single-row deep groove ball bearings
520907.		37	62	21	0,13	single-row deep groove ball bearings
52226.		130	230	40	8,2	single-row cylindrical roller bearings
52228.		140	250	42	10,2	single-row cylindrical roller bearings
52309.		45	100	25	1,14	single-row cylindrical roller bearings
52320.		100	215	47	9,73	single-row cylindrical roller bearings
52328.		140	300	62	24,4	single-row cylindrical roller bearings
52332.		160	340	68	35,2	single-row cylindrical roller bearings
52536.		180	320	86	33,1	single-row cylindrical roller bearings
5254704.	NK25/16	25	33	16	0,03	needle roller bearings
5254705.	NK29/20	29	38	20	0,055	needle roller bearings
5254706.	NK32/20	32	42	20	0,05	needle roller bearings
5254706.	NR35/20	35	45	20	0,071	needle roller bearings
5254708.	NK40/30	40	50	30	0,12	needle roller bearings
5254710.	NK50/25	50	62	25	0,12	needle roller bearings
5254804.	NK24/16	24	32	16	0,03	needle roller bearings
5254900.	NK14/16	14	22	16	0,02	needle roller bearings
5254905.	NK30/20	30	40	20	0,06	needle roller bearings
52618.		90	190	64	9,36	single-row cylindrical roller bearings
52624.		120	260	86	24,8	single-row cylindrical roller bearings
52626.		130	280	93	33,2	single-row cylindrical roller bearings
52630.		150	320	108	46	single-row cylindrical roller bearings
52732.		160	320	108	44,6	single-row cylindrical roller bearings
530206.		30	62	24	0,26	single-row deep groove ball bearings
530209.		45	85	29	0,47	single-row deep groove ball bearings
530211.		55	100	27	0,7	single-row deep groove ball bearings
53516.	22216	80	140	33	2,13	spherical roller bearings
53518.	22218	90	160	40	3,49	spherical roller bearings
53519.	22219	95	170	43	4,25	spherical roller bearings
53520.	22220	100	180	46	5,14	spherical roller bearings
53522.	22222	110	200	53	7,29	spherical roller bearings
53524.	22224	120	215	58	8,97	spherical roller bearings
53526.	22226	130	230	64	11,5	spherical roller bearings
53608.	22308	40	90	33	1,06	spherical roller bearings
53610.	22310	50	110	40	1,87	spherical roller bearings
53611.	22311	55	120	43	4,36	spherical roller bearings
53612.	22312	60	130	46	2,96	spherical roller bearings
53614.	22314	70	150	51	4,33	spherical roller bearings
53615.	22315	75	160	55	5,37	spherical roller bearings
53616.	22316	80	170	58	6,42	spherical roller bearings
53618.	22318	90	190	64	8,65	spherical roller bearings
53619.	22319	95	200	67	10,26	spherical roller bearings
53620.	22320	100	215	73	13	spherical roller bearings
544203.		17	20	30	0,11	combined needle roller bearings with cylindrical roller bearings
544207.		35	40	52	0,34	combined needle roller bearings with cylindrical roller bearings
54707.		35	58	22	0,26	needle roller bearings
54708.		40	66	22	0,35	needle roller bearings
54712.		60	90	28	0,73	needle roller bearings
54808.		40	68	31	0,55	needle roller bearings
54810.		50	80	28	0,62	needle roller bearings
54822.		110	145	32	1,65	needle roller bearings
550703.		17	40	13	0,068	single-row deep groove ball bearings
576201.		12	32	20	0,073	angular-contact radial ball bearings
576205.		25	52	30	0,25	angular-contact radial ball bearings
577768.		340	520	103	282	four-row tapered roller bearings
577796.		480	700	110	492	four-row tapered roller bearings
58708.		41	60	28	0,25	thrust ball bearings
58709.		46	68	28		thrust ball bearings
58712.		60	82	32	0,42	thrust ball bearings
594805.		25	30	47	0,19	combined needle roller bearings with cylindrical roller bearings
594807.		35	40	60	0,32	combined needle roller bearings with cylindrical roller bearings
594808.		40	45	58	0,44	combined needle roller bearings with cylindrical roller bearings
594809.		45	50	62	0,52	combined needle roller bearings with cylindrical roller bearings
597/750.		750	950	290	648	cylindrical roller thrust bearings
60018.	608 Z	8	22	7	0,012	single-row deep groove ball bearings
60024.	624 Z	4	13	5	0,003	single-row deep groove ball bearings
60025.	625 Z	5	16	5	0,005	single-row deep groove ball bearings
60026.	626 Z	6	19	6	0,008	single-row deep groove ball bearings
60027.	627 Z	7	22	7	0,013	single-row deep groove ball bearings
60029.	629 Z	9	26	8	0,019	single-row deep groove ball bearings
6003.		3	16	5	0,006	angular-contact radial ball bearings

Bearing No.	Equivalent	Dimensions [mm]			Weight [kg]	Bearing type
		d	D	B		
6004.		4	16	5	0,005	angular-contact radial ball bearings
6006.		6	21	7	0,011	angular-contact radial ball bearings
60061.		1	4	1,7	0,0001	single-row deep groove ball bearings
60064.	634 Z	4	16	5,5	0,006	single-row deep groove ball bearings
60066.		6	19	6,5	0,008	single-row deep groove ball bearings
60075.		5	13	5	0,003	single-row deep groove ball bearings
6008.		8	24	7	0,015	angular-contact radial ball bearings
60089.		9	22	7	0,011	single-row deep groove ball bearings
6010.		10	28	8	0,023	angular-contact radial ball bearings
60104.	6004 Z	20	42	12	0,07	single-row deep groove ball bearings
60106.	6006 Z	30	55	13	0,14	single-row deep groove ball bearings
60107.		35	62	14	0,16	single-row deep groove ball bearings
60110.		50	80	16	0,29	single-row deep groove ball bearings
60111.		55	90	18	0,46	single-row deep groove ball bearings
60112.		60	95	18	0,46	single-row deep groove ball bearings
60114.		70	110	20	0,6	single-row deep groove ball bearings
60115.		75	115	20	0,66	single-row deep groove ball bearings
60116.		80	125	22	0,87	single-row deep groove ball bearings
60118.		90	140	24	1,15	single-row deep groove ball bearings
6012.		12	32	7	0,029	angular-contact radial ball bearings
60120.	6020 Z	100	150	24	1,28	single-row deep groove ball bearings
60121.	6021 Z	105	106	26	1,8	single-row deep groove ball bearings
6015.		15	35	8	0,035	angular-contact radial ball bearings
6017.		7	19	6	0,007	angular-contact radial ball bearings
6020.		20	47	12	0,095	angular-contact radial ball bearings
60200.	6200 Z	10	30	9	0,03	single-row deep groove ball bearings
60203.	6203 Z	17	40	12	0,06	single-row deep groove ball bearings
60204.	6204 Z	20	47	14	0,106	single-row deep groove ball bearings
60205.	6205 Z	25	52	15	0,12	single-row deep groove ball bearings
60206.	6206 Z	30	62	16	0,19	single-row deep groove ball bearings
60207.	6207 Z	35	72	17	0,29	single-row deep groove ball bearings
60208.	6208 Z	40	80	18	0,36	single-row deep groove ball bearings
60209.	6209 Z	45	85	19	0,41	single-row deep groove ball bearings
60210.	6210 Z	50	90	20	0,46	single-row deep groove ball bearings
60211.		55	100	21	0,61	single-row deep groove ball bearings
60212.	6212 Z	60	110	22	0,8	single-row deep groove ball bearings
60214.	6214 Z	70	125	24	1,06	single-row deep groove ball bearings
60215.	6215 Z	75	130	25	1,17	single-row deep groove ball bearings
60220.	6220 Z	100	180	34	3,2	single-row deep groove ball bearings
6023.		3	10	4	0,002	angular-contact radial ball bearings
6025.		5	16	5	0,005	angular-contact radial ball bearings
6026.		6	19	6	0,007	angular-contact radial ball bearings
6027.		7	22	7	0,011	angular-contact radial ball bearings
6028.		8	24	8	0,016	angular-contact radial ball bearings
60304.	6304 Z	20	52	15	0,14	single-row deep groove ball bearings
60305.	6305 Z	25	62	17	0,24	single-row deep groove ball bearings
60306.	6306 Z	30	72	19	0,34	single-row deep groove ball bearings
60307.	6307 Z	35	80	21	0,44	single-row deep groove ball bearings
60308.	6308 Z	40	90	23	0,64	single-row deep groove ball bearings
60309.	6309 Z	45	100	25	0,8	single-row deep groove ball bearings
60310.	6310 Z	50	110	27	1,08	single-row deep groove ball bearings
60311.	6311 Z	55	120	29	1,37	single-row deep groove ball bearings
60312.		60	130	31	1,7	single-row deep groove ball bearings
60313.		65	140	33	2,1	single-row deep groove ball bearings
60314.	6314 Z	70	150	35	2,5	single-row deep groove ball bearings
60722.		110	175	31	2,85	single-row deep groove ball bearings
60902.		16	35	11	0,043	single-row deep groove ball bearings
6101.		12	28	8	0,021	angular-contact radial ball bearings
6102.		15	32	9	0,029	angular-contact radial ball bearings
62.		2	7	2,5	0,0005	single-row deep groove ball bearings
6204.		20	47	14	0,104	angular-contact radial ball bearings
62206.		30	62	16	0,23	single-row cylindrical roller bearings
62310.		50	110	27	1,4	single-row cylindrical roller bearings
62313.		65	140	33	2,94	single-row cylindrical roller bearings
62314.		70	150	35	3,35	single-row cylindrical roller bearings
62315.		75	160	37	4,3	single-row cylindrical roller bearings
62318.		90	190	43	6,83	single-row cylindrical roller bearings
62320.		100	215	47	9,5	single-row cylindrical roller bearings
62330.		150	320	65	29,8	single-row cylindrical roller bearings
62413.		65	160	37	3,6	single-row cylindrical roller bearings
62414.		70	180	42	6,8	single-row cylindrical roller bearings
62415.		75	190	45	8,42	single-row cylindrical roller bearings
62417.		85	210	52	11	single-row cylindrical roller bearings
62422.		110	280	65	25,2	single-row cylindrical roller bearings
62536.		180	320	86	31,7	single-row cylindrical roller bearings

22. CROSS LIST GOST

Bearing No.	Equivalent	Dimensions [mm]			Weight [kg]	Bearing type
		d	D	B		
6254704.	NK24/20	24	32	20	0,036	needle roller bearings
6254902.	RNA6902	20	28	23	0,04	needle roller bearings
6254904.	RNA6904	25	37	30	0,103	needle roller bearings
6254905.	RNA6905	30	42	30	0,113	needle roller bearings
6254906.	RNA6906	35	47	30	0,136	needle roller bearings
62612.		60	130	46	3,4	single-row cylindrical roller bearings
62613.		65	140	48	4	single-row cylindrical roller bearings
636905.		23,5	36,5	14	0,03	single-row angular contact ball bearings in housing
636906.		28	42	21,5	0,05	single-row angular contact ball bearings in housing
640013.		3	9	4	0,0018	single-row deep groove ball bearings
6442134.		170	260	160	33,3	four-row cylindrical roller bearings
6442144.		220	340	218	78,7	four-row cylindrical roller bearings
6462164.		320	480	290	195	four-row cylindrical roller bearings
656312.		60	130	93	5,15	angular-contact radial ball bearings
656322.		110	240	150	33,5	angular-contact radial ball bearings
656340.		200	420	240	171	angular-contact radial ball bearings
656412.		60	150	105	10,1	angular-contact radial ball bearings
656432.		160	400	264	186	angular-contact radial ball bearings
66118.		90	140	37	2,28	double-row angular-contact ball bearings
66202.	7202 B	15	35	11	0,05	angular-contact radial ball bearings
66203.	7203 B	17	40	12	0,07	angular-contact radial ball bearings
66204.	7204 B	20	47	14	0,11	angular-contact radial ball bearings
66205.	7205 B	25	52	15	0,13	angular-contact radial ball bearings
66207.	7207 B	35	72	17	0,29	angular-contact radial ball bearings
66208.	7208 B	40	80	18	0,39	angular-contact radial ball bearings
66209.	7209 B	45	85	19	0,44	angular-contact radial ball bearings
66210.	7210 B	50	90	20	0,49	angular-contact radial ball bearings
66211.	7211 B	55	100	21	0,75	angular-contact radial ball bearings
66211.	7221 B	105	190	36	5,16	angular-contact radial ball bearings
66212.	7212 B	60	110	22	0,87	angular-contact radial ball bearings
66215.	7215 B	75	130	25	1,42	angular-contact radial ball bearings
66217.	7217 B	85	150	28	2,08	angular-contact radial ball bearings
66218.	7218 B	90	160	30	2,44	angular-contact radial ball bearings
66219.	7219 B	95	170	32	3,18	angular-contact radial ball bearings
66220.	7220 B	100	180	34	3,55	angular-contact radial ball bearings
66303.	7303 B	17	47	14	0,15	angular-contact radial ball bearings
66307.	7307 B	35	80	21	0,51	angular-contact radial ball bearings
66308.	7308 B	40	90	23	0,695	angular-contact radial ball bearings
66309.	7309 B	45	100	25	0,87	angular-contact radial ball bearings
66311.	7311 B	55	120	29	1,55	angular-contact radial ball bearings
66312.	7312 B	60	130	31	1,71	angular-contact radial ball bearings
66314.	7314 B	70	150	35	3,1	angular-contact radial ball bearings
66315.	7315 B	75	160	37	3,3	angular-contact radial ball bearings
66319.	7319 B	95	200	45	6,25	angular-contact radial ball bearings
66322.	7322 B	110	240	50	11,16	angular-contact radial ball bearings
66406.	7306 B	30	90	23	0,77	angular-contact radial ball bearings
66408.	7408 B	40	110	27	1,37	angular-contact radial ball bearings
66409.	7409 B	45	120	29	1,75	angular-contact radial ball bearings
66410.	7410 B	50	130	31	2,17	angular-contact radial ball bearings
66412.	7412 B	60	150	35	3,87	angular-contact radial ball bearings
66414.	7414 B	70	180	42	5,74	angular-contact radial ball bearings
66418.	7418 B	90	225	54	12	angular-contact radial ball bearings
664414.		70	76	46	0,12	double-row needle roller and cage assemblies
664514.		70	78	31	0,11	double-row needle roller and cage assemblies
664613.		65	73	47	0,17	double-row needle roller and cage assemblies
664614.		68	76	47,5	0,16	double-row needle roller and cage assemblies
664713.		62	70	52	0,18	double-row needle roller and cage assemblies
664714.		72	83	42,5	0,22	double-row needle roller and cage assemblies
664812.		62	70	45	0,14	double-row needle roller and cage assemblies
664813.		65	73	54	0,19	double-row needle roller and cage assemblies
664815.		75	83	46	0,19	double-row needle roller and cage assemblies
664818.		89	100	42,5	0,27	double-row needle roller and cage assemblies
664906.		28	33	27	0,013	double-row needle roller and cage assemblies
664908.		40	46	32	0,042	double-row needle roller and cage assemblies
664913.		62	70	31	0,11	double-row needle roller and cage assemblies
664915.		75	86	40	0,22	double-row needle roller and cage assemblies
664916.		81	92	42,5	0,25	double-row needle roller and cage assemblies
666311.		55	120	87	4,36	angular-contact radial ball bearings
666322.		110	240	150	33,5	angular-contact radial ball bearings
666432.		160	400	264	186	angular-contact radial ball bearings
6697/900.		900	1120	82	189	crossed cylindrical roller bearings
6703.		17	44	10	0,075	angular-contact radial ball bearings
67204.		20	47	14	0,13	closed tapered roller bearings
672778.		390	560	100	71,3	single-row cylindrical roller bearings
67513.		65	120	31	1,64	closed tapered roller bearings

Bearing No.	Equivalent	Dimensions [mm]			Weight [kg]	Bearing type
		d	D	B		
676/850.		850	970	36	81,8	tapered roller bearings
677/965.		965	1115	50	63,2	tapered roller bearings
67709.		45	80	19	1,07	closed tapered roller bearings
67712.		60	100	26,5	0,89	closed tapered roller bearings
67728.		140	238	57	9,04	tapered roller bearings
67738.		190	260	49	7,58	closed tapered roller bearings
67744.		220	300	56	11,3	closed tapered roller bearings
67814.		70	120	32	1,71	closed tapered roller bearings
67818.		90	140	30,5	1,43	closed tapered roller bearings
67848.		240	320	56	11,6	closed tapered roller bearings
67852.		260	360	67	23,2	closed tapered roller bearings
679/622.		622,3	725,487	46	32,6	tapered roller bearings
67910.		50,8	93,264	30,302	0,89	closed tapered roller bearings
67912.		60	95	25	2,3	closed tapered roller bearings
67920.		98,425	152,4	42	2,48	closed tapered roller bearings
67928.		140	210	46	5	closed tapered roller bearings
688811.		55	89	21	0,41	thrust ball bearings in housings
688911.		52,388	83,5	20,7	0,39	thrust ball bearings in housings
697306.		30	72	4	0,89	closed tapered roller bearings
697712.		60	100	26,5	1,65	closed tapered roller bearings
697716.		80	140	38,5	5,11	closed tapered roller bearings
697722.		110	170	39,5	6,77	closed tapered roller bearings
697724.		120	180	44	8,15	closed tapered roller bearings
697732.		160	240	50	16,4	closed tapered roller bearings
697737.		185	235	37	9,05	closed tapered roller bearings
697742.		210	290	50	21,1	closed tapered roller bearings
697814.		70	120	32	3,61	closed tapered roller bearings
697815.		75	130	37	4,01	closed tapered roller bearings
697817.		85	140	38,5	4,75	closed tapered roller bearings
697824.		120	190	50	10,5	closed tapered roller bearings
697828.		140	190	38	6,8	closed tapered roller bearings
697838.		190	290	52	29,2	closed tapered roller bearings
697920.		98,425	152,4	42	5,49	closed tapered roller bearings
697928.		140	210	46	11,3	closed tapered roller bearings
700.	16100	10	28	8	0,023	single-row deep groove ball bearings
7000101.	16001	12	28	7	0,018	single-row deep groove ball bearings
7000102.	16002	15	32	8	0,025	single-row deep groove ball bearings
7000103.	16003	17	35	8	0,03	single-row deep groove ball bearings
7000104.	16004	20	42	8	0,051	single-row deep groove ball bearings
7000105.	16005	25	47	8	0,06	single-row deep groove ball bearings
7000106.	16006	30	55	9	0,1	single-row deep groove ball bearings
7000107.	16007	35	62	9	0,11	single-row deep groove ball bearings
7000108.	16008	40	68	9	0,13	single-row deep groove ball bearings
7000109.	16009	45	75	10	0,2	single-row deep groove ball bearings
7000110.	16010	50	80	10	0,21	single-row deep groove ball bearings
7000111.	16011	55	90	11	0,28	single-row deep groove ball bearings
7000112.	16012	60	95	11	0,29	single-row deep groove ball bearings
7000113.	16013	65	100	11	0,38	single-row deep groove ball bearings
7000114.	16014	70	110	13	0,45	single-row deep groove ball bearings
7000115.	16015	75	115	13	0,47	single-row deep groove ball bearings
7000116.	16016	80	125	14	0,63	single-row deep groove ball bearings
7000117.	16017	85	130	14	0,66	single-row deep groove ball bearings
7000118.	16018	90	140	16	0,86	single-row deep groove ball bearings
7000120.	16020	100	150	16	0,91	single-row deep groove ball bearings
7000121.	16021	105	160	18	1,2	single-row deep groove ball bearings
7000124.	16024	120	180	19	1,67	single-row deep groove ball bearings
7000126.	16026	130	200	22	2,35	single-row deep groove ball bearings
7000130.	16030	150	225	24	3,15	single-row deep groove ball bearings
7000134.	16034	170	260	28	5	single-row deep groove ball bearings
7000136.	16036	180	280	31	6,6	single-row deep groove ball bearings
7000140.	16040	200	310	34	8,85	single-row deep groove ball bearings
7000144.	16044	220	340	37	13,5	single-row deep groove ball bearings
7000804.		20	32	4	0,014	single-row deep groove ball bearings
7000805.		25	37	4	0,016	single-row deep groove ball bearings
7000806.		30	42	4	0,019	single-row deep groove ball bearings
7000807.		35	47	4	0,021	single-row deep groove ball bearings
7000808.		40	52	4	0,024	single-row deep groove ball bearings
7000811.		55	72	7	0,78	single-row deep groove ball bearings
7000824.		120	150	10	0,42	single-row deep groove ball bearings
7000834.		170	215	14	1,32	single-row deep groove ball bearings
7000910.		50	72	8	0,1	single-row deep groove ball bearings
7000976.		330	520	44	31,2	single-row deep groove ball bearings
7002134.		160	260	28	6	single-row cylindrical roller bearings
7002140.		200	310	34	10,3	single-row cylindrical roller bearings
7002148.		240	360	37	14,2	single-row cylindrical roller bearings

https://nppnovoteh.com

22. CROSS LIST GOST

Bearing No.	Equivalent	Dimensions [mm]			Weight [kg]	Bearing type
		d	D	B		
700409.		45	120	29	1,64	single-row deep groove ball bearings
704702.		16,3	30	25	0,07	needle roller bearings for Cardan's shafts
704902.		15,2	28	22,2	0,061	needle roller bearings for Cardan's shafts
704902.		15,235	28	19,5	0,06	needle roller bearings for Cardan's shafts
704902.		15,235	28	20	0,06	needle roller bearings for Cardan's shafts
705.	16105	25	52	10	0,091	single-row deep groove ball bearings
706.	16106	30	42	7	0,026	single-row deep groove ball bearings
709.	16109	45	75	11	0,22	single-row deep groove ball bearings
7097152.		260	400	44	40,8	double-row tapered roller bearings
7097156.		280	420	47	43	double-row tapered roller bearings
71/500.		500	720	100	135	tapered roller bearings
71/600.		600	870	118	234	tapered roller bearings
71/900.		900	1280	170	687	tapered roller bearings
710.	16110	50	80	11	0,21	single-row deep groove ball bearings
710134.		170	260	42	7,1	single-row deep groove ball bearings
710207.		35	72	17	0,29	single-row deep groove ball bearings
710309.		45	100	25	0,8	single-row deep groove ball bearings
7138.		190	290	46	11,8	tapered roller bearings
7168284.		420	580		51,5	single-direction angular-contact thrust ball bearings
7168436.		180	360		32,6	single-direction angular-contact thrust ball bearings
7184.		420	620	90	86,8	tapered roller bearings
7188.		440	650	94	102	tapered roller bearings
7202.	30202	15	35	11	0,05	tapered roller bearings
7203.	30203	17	40	12	0,08	tapered roller bearings
7204.	30204	20	47	14	0,13	tapered roller bearings
7205.	30205	25	52	15	0,15	tapered roller bearings
7206.	30206	30	62	16	0,23	tapered roller bearings
7207.	30207	35	72	17	0,32	tapered roller bearings
7208.	30208	40	80	18	0,42	tapered roller bearings
7209.	30209	45	85	19	0,48	tapered roller bearings
7210.	30210	50	90	21	0,54	tapered roller bearings
7211.	30211	55	100	21	0,71	tapered roller bearings
7212.	30212	60	110	22	0,92	tapered roller bearings
7214.	30214	70	125	24	1,25	tapered roller bearings
7215.	30215	75	130	26	1,42	tapered roller bearings
7216.	30216	80	140	26	1,62	tapered roller bearings
7217.	30217	85	150	28	2,1	tapered roller bearings
7218.	30218	90	160	30	2,62	tapered roller bearings
7219.	30219	95	170	32	3,2	tapered roller bearings
7220.	30220	100	180	34	3,8	tapered roller bearings
7224.	30224	120	215	41	6,2	tapered roller bearings
7230.	30230	150	270	45	10,3	tapered roller bearings
7244.	30244	220	400	65	34,9	tapered roller bearings
7254708.	NK45/30	45	55	30	0,14	needle roller bearings
7254709.	NK50/35	50	62	35	0,22	needle roller bearings
727.	16127	135	195	28	3,08	single-row deep groove ball bearings
7304.	30304	20	52	15	0,17	tapered roller bearings
7305.	31305	25	62	17	0,27	tapered roller bearings
7306.	30306	30	72	19	0,46	tapered roller bearings
7307.	30307	35	80	21	0,55	tapered roller bearings
7308.	30308	40	90	22,25	0,76	tapered roller bearings
7309.	30309	45	100	26	1,01	tapered roller bearings
7310.	30310	50	110	27	1,28	tapered roller bearings
7311.	30311	55	120	29	1,62	tapered roller bearings
7312.	30312	60	130	31	2	tapered roller bearings
7313.	30313	65	140	33	2,54	tapered roller bearings
7314.	30314	70	150	35	3,02	tapered roller bearings
7315.	30315	75	160	37	3,6	tapered roller bearings
7317.	30317	85	180	41	5,21	tapered roller bearings
7318.	30318	90	190	43	5,56	tapered roller bearings
7319.	30319	95	200	45	6,73	tapered roller bearings
7320.	30320	100	215	47	8,25	tapered roller bearings
733.	16133	165	250	35	6,43	single-row deep groove ball bearings
73519.		95	180	46	5,67	spherical roller bearings
7352.		260	540	102	108,8	tapered roller bearings
73536.		180	340	92	41,1	spherical roller bearings
73544.		220	440	120	76,2	spherical roller bearings
73611.		55	130	46	3,47	spherical roller bearings
73613.		65	160	55	6,12	spherical roller bearings
73615.		75	170	58	7,15	spherical roller bearings
73616.		80	180	60	8,38	spherical roller bearings
73617.		85	190	64	10	spherical roller bearings
73619.		95	215	73	14	spherical roller bearings
73620.		100	240	80	19,7	spherical roller bearings
73623.		115	260	86	24,6	spherical roller bearings

Bearing No.	Equivalent	Dimensions [mm]			Weight [kg]	Bearing type
		d	D	B		
73630.		150	340	114	55	spherical roller bearings
73634.		170	380	126	73	spherical roller bearings
73636.		180	400	132	86,5	spherical roller bearings
73644.		220	500	155	167	spherical roller bearings
73727.		135	280	93	28,7	spherical roller bearings
73736.		180	380	126	76,4	spherical roller bearings
73930.		150	320	108	46,8	spherical roller bearings
740063.		3	12	4	0,004	single-row deep groove ball bearings
7405.		25	52	15	0,16	tapered roller bearings
7406.		30,174	64,316	20	0,31	tapered roller bearings
7407.		35	65	18,3	0,27	tapered roller bearings
7409.		44,461	83,082	23	0,56	tapered roller bearings
7410.		50,811	101,624	36,07	1,24	tapered roller bearings
747746.		230	330	196,85	38	double-row tapered roller bearings
7506.	32206	30	62	20	0,29	tapered roller bearings
7507.	32207	35	72	23	0,45	tapered roller bearings
7508.	32208	40	80	23,5	0,58	tapered roller bearings
7509.	32209	45	85	23	0,62	tapered roller bearings
7510.	32210	50	90	23	0,63	tapered roller bearings
7511.	32211	55	100	25	0,82	tapered roller bearings
7512.	32212	60	110	28	1,18	tapered roller bearings
7513.	32213	65	120	31	1,57	tapered roller bearings
7514.	32214	70	125	31	1,6	tapered roller bearings
7515.	32215	75	130	31	1,72	tapered roller bearings
7516.	32216	80	140	33	2,14	tapered roller bearings
7517.	32217	85	150	36	2,68	tapered roller bearings
7518.	32218	90	160	40	3,44	tapered roller bearings
7519.	32219	95	170	45,5	4,42	tapered roller bearings
7520.	32220	100	180	46	5,28	tapered roller bearings
7522.	32222	110	200	53	7,37	tapered roller bearings
7524.	32224	120	215	58	9,2	tapered roller bearings
7526.	32226	130	230	65	11,8	tapered roller bearings
7528.	32228	140	250	68	14,9	tapered roller bearings
7530.	32230	150	270	74	18	tapered roller bearings
7532.	32232	160	290	80	22,2	tapered roller bearings
7536.	32236	180	320	86	27,6	tapered roller bearings
753610.	22311 K + AH2311	50	120	43	5,76	spherical roller bearings
753614.	22315 K + AH2315	70	160	55	5,76	spherical roller bearings
753619.	22320 K + AH2320	95	215	73	13,6	spherical roller bearings
7538.	32238	190	340	92	35,4	tapered roller bearings
7544.	32244	220	400	108	58,4	tapered roller bearings
7604.	32304	20	52	21	0,24	tapered roller bearings
7605.	32305	25	62	24	0,38	tapered roller bearings
7606.	32306	30	72	27	0,56	tapered roller bearings
7607.	32307	35	80	31	0,76	tapered roller bearings
7608.	32308	40	90	33	1,07	tapered roller bearings
7609.	32309	45	100	36	1,34	tapered roller bearings
7610.	32310	50	110	40	1,91	tapered roller bearings
7611.	32311	55	120	43	2,42	tapered roller bearings
7612.	32312	60	130	46	2,98	tapered roller bearings
7613.	30313	65	140	48	3,64	tapered roller bearings
7614.	32314	70	150	51	4,33	tapered roller bearings
7615.	32315	75	160	55	5,36	tapered roller bearings
7616.	32316	80	170	58	6,5	tapered roller bearings
7618.	32318	90	190	64	8,8	tapered roller bearings
7620.	32320	100	215	73	13,1	tapered roller bearings
7622.	32322	110	240	80	17,8	tapered roller bearings
7622.	32322	110	240	80	17,9	tapered roller bearings
7624.	32324	120	260	86	22,4	tapered roller bearings
7634.	32334	170	360	120	58	tapered roller bearings
76612.		60	140	48	4	spherical roller bearings
76692/560.		560	750	85	111	crossed cylindrical roller bearings
7669292.		460	620	73	69	crossed cylindrical roller bearings
76697/670.		670	900	80	171	crossed cylindrical roller bearings
7690906.		30	47	7	0,042	single-row deep groove ball bearings
77/520.		520	740	86	118	tapered roller bearings
77/560.		560	820	120	229	tapered roller bearings
770067.		7	22	8	0,021	single-row deep groove ball bearings
770068.		8	22	8	0,019	single-row deep groove ball bearings
7705.		28	67	20,5	0,38	tapered roller bearings
7706.		28	58	16	0,2	tapered roller bearings
7707.		33	62	16,5	0,22	tapered roller bearings
7709.	31309	45	100	27	1,06	tapered roller bearings
771/560.		500	720	202	564	four-row tapered roller bearings
771/630.		630	920	245	1156	four-row tapered roller bearings

22. CROSS LIST GOST

Bearing No.	Equivalent	Dimensions [mm]			Weight [kg]	Bearing type
		d	D	B		
7710.		50	82	21,5	0,42	tapered roller bearings
7712.		60	120	44	2,36	tapered roller bearings
7714.		70	120	42	1,93	tapered roller bearings
77168.		340	520	155	233	four-row tapered roller bearings
77172.		360	540	155	217	four-row tapered roller bearings
7718.		90	160	46	4,18	tapered roller bearings
77184.		420	620	170	412	four-row tapered roller bearings
77196.		480	700	200	544	four-row tapered roller bearings
7721.		105	215	46	12,7	tapered roller bearings
7723.		115	190	49	5,2	tapered roller bearings
7728.		140	225	34	5,6	tapered roller bearings
7730.		150	254	63,5	12,5	tapered roller bearings
7736.		180	290	63,5	15,8	tapered roller bearings
7757.		285	330	23	3,16	tapered roller bearings
7760.		300	500	82	87,1	tapered roller bearings
776700.		10	41	22,4	0,14	double-row angular-contact ball bearings
776701.		12	49,4	36	0,34	double-row angular-contact ball bearings
776702.		12,7	57,5	36,5	0,39	double-row angular-contact ball bearings
776800.		10	35,85	17,7	0,14	double-row angular-contact ball bearings
776801.		12,7	51,6	24	0,34	double-row angular-contact ball bearings
776900.		11,6	39	20,76	0,15	double-row angular-contact ball bearings
777/1000.		1000	1580	385	6158	four-row tapered roller bearings
777/533.		533	810	208	791	four-row tapered roller bearings
777/620.		620	800	171,5	481	four-row tapered roller bearings
777/647.		647	1030	273	1845	four-row tapered roller bearings
777/650.		650	1030	273	1831	four-row tapered roller bearings
777/660.		660	1070	312	2253	four-row tapered roller bearings
777/750.		750	1130	330	2480	four-row tapered roller bearings
7772.		360	530	66	52,3	tapered roller bearings
77741.		205	320	96	55,8	four-row tapered roller bearings
77748.		240	410	128	144	four-row tapered roller bearings
77752.		260	400	119	111	four-row tapered roller bearings
77760.		300	500	165	259	four-row tapered roller bearings
77766.		330	580	172	408	four-row tapered roller bearings
777752.		260	440	140	164	four-row tapered roller bearings
777770.		350	590	200	473	four-row tapered roller bearings
77779.		395	545	120	198	four-row tapered roller bearings
777792.		460	730	210	672	four-row tapered roller bearings
77788.		440	650	172	410	four-row tapered roller bearings
77796.		480	700	196	563	four-row tapered roller bearings
778/520.		520	950	282	1909	four-row tapered roller bearings
778/660.		660	855	152	470	four-row tapered roller bearings
778/750.		750	1090	279	1799	four-row tapered roller bearings
7784.		420	620	85	86,2	tapered roller bearings
77856.		280	500	150	254	four-row tapered roller bearings
77880.		400	540	130	177	four-row tapered roller bearings
779/600.		600	800	172,5	537	four-row tapered roller bearings
77953.		266,7	355,6	111	62,5	four-row tapered roller bearings
77961.		304,675	438,1	135	136	four-row tapered roller bearings
77968.		343,052	457,098	122,238	77	four-row tapered roller bearings
77976.		381	571,5	150	279	four-row tapered roller bearings
7804.	LM11949/10	19,05	45,25	16,6371	0,13	tapered roller bearings
7805.		26	57,15	17,462	0,23	tapered roller bearings
7806.		32	72	28,5	0,37	tapered roller bearings
7807.		34,938	73,03	26,975	0,54	tapered roller bearings
7809.		45	90	40	1,14	tapered roller bearings
7810.		52,388	92,075	25,4	0,65	tapered roller bearings
7815.		75	135	45	2,72	tapered roller bearings
7818.		90	170	59,5	6,84	tapered roller bearings
7821.		105	180	46	5	tapered roller bearings
7824.		120	180		3,4	tapered roller bearings
7828.		140	300	82	27,5	tapered roller bearings
7832.		160	375	79,4	39,6	tapered roller bearings
7841.		205	485	95,2	85,9	tapered roller bearings
7851.		255	560	104,8	128	tapered roller bearings
7860.		300	440	58	31	tapered roller bearings
7866.		330	375	23,75	35,3	tapered roller bearings
7876.		380	440	29	68,3	tapered roller bearings
7906.		30,238	63,527	20,25	0,32	tapered roller bearings
7909.		45	100	43	1,6	tapered roller bearings
790906.		31	75	26	0,66	single-row deep groove ball bearings
7915.	JM714249/10	75	120	29,5	1,3	tapered roller bearings
7919.	LL319349/10	95,25	128,588	15	1,33	tapered roller bearings
7921.		107,95	158,75	21,408	1,33	tapered roller bearings
7923.		114,3	152,4	21,433	1,08	tapered roller bearings

Bearing No.	Equivalent	Dimensions [mm]			Weight [kg]	Bearing type
		d	D	B		
7927.		133,35	173,038	17,5	1,03	tapered roller bearings
7933.		165,125	288,95	63,5	20,6	tapered roller bearings
7939.		196,85	241,3	23,017	2,1	tapered roller bearings
7941.		203,225	317,55	63,5	18,3	tapered roller bearings
7946.		228,63	300,063	29,3	5,62	tapered roller bearings
7947.		234,95	327,025	50	12,3	tapered roller bearings
7951.		254,025	422,325	79,8	46,1	tapered roller bearings
7956.		280,228	406,45	48,4	20,1	tapered roller bearings
80017.	607 ZZ	7	19	6	0,008	single-row deep groove ball bearings
80018.	608 ZZ	8	22	7	0,012	single-row deep groove ball bearings
80019.	609 ZZ	9	24	7	0,015	single-row deep groove ball bearings
80023.	623 ZZ	3	10	4	0,001	single-row deep groove ball bearings
80024.	624 ZZ	4	13	5	0,003	single-row deep groove ball bearings
80025.	625 ZZ	5	16	5	0,005	single-row deep groove ball bearings
80026.	626 ZZ	6	19	6	0,008	single-row deep groove ball bearings
80027.	627 ZZ	7	22	7	0,013	single-row deep groove ball bearings
80029.	629 ZZ	9	26	8	0,019	single-row deep groove ball bearings
80064.	634 ZZ	4	16	5,5	0,006	single-row deep groove ball bearings
80066.		6	19	6,5	0,008	single-row deep groove ball bearings
80075.		5	13	5	0,003	single-row deep groove ball bearings
80089.		9	22	7	0,011	single-row deep groove ball bearings
80100.		10	26	8	0,02	single-row deep groove ball bearings
80101.	6001 ZZ	12	28	8	0,02	single-row deep groove ball bearings
80102.	6002 ZZ	15	32	9	0,03	single-row deep groove ball bearings
80103.	6003 ZZ	17	35	10	0,04	single-row deep groove ball bearings
80104.	6004 ZZ	20	42	12	0,07	single-row deep groove ball bearings
80106.	6006 ZZ	30	55	13	0,14	single-row deep groove ball bearings
80107.	6007 ZZ	35	62	14	0,16	single-row deep groove ball bearings
80108.	6008 ZZ	40	68	15	0,19	single-row deep groove ball bearings
80110.		50	80	16	0,29	single-row deep groove ball bearings
80111.		55	90	18	0,46	single-row deep groove ball bearings
80112.		60	95	18	0,46	single-row deep groove ball bearings
80115.		75	115	20	0,66	single-row deep groove ball bearings
80116.		80	125	22	0,87	single-row deep groove ball bearings
80118.		90	140	24	1,15	single-row deep groove ball bearings
80120.	6020 ZZ	100	150	24	1,28	single-row deep groove ball bearings
80124.		120	180	28	2,05	single-row deep groove ball bearings
802.		15	42	11	0,08	single-row deep groove ball bearings
80200.	6200 ZZ	10	30	9	0,03	single-row deep groove ball bearings
80201.	6201 ZZ	12	32	10	0,03	single-row deep groove ball bearings
80203.	6203 ZZ	17	40	12	0,06	single-row deep groove ball bearings
80204.	6204 ZZ	20	47	14	0,106	single-row deep groove ball bearings
80205.	6205 ZZ	25	52	15	0,12	single-row deep groove ball bearings
80206.	6206 ZZ	30	62	16	0,19	single-row deep groove ball bearings
80207.	6207 ZZ	35	72	17	0,29	single-row deep groove ball bearings
80208.	6208 ZZ	40	80	18	0,36	single-row deep groove ball bearings
80209.	6209 ZZ	45	85	19	0,41	single-row deep groove ball bearings
80211.		55	100	21	0,61	single-row deep groove ball bearings
80212.	6212 ZZ	60	110	22	0,8	single-row deep groove ball bearings
80212.		60	110	22	0,85	single-row cylindrical roller bearings
80213.	6213 ZZ	65	120	23	0,97	single-row deep groove ball bearings
80215.	6215 ZZ	75	130	25	1,17	single-row deep groove ball bearings
80217.	6217 ZZ	85	150	28	1,77	single-row deep groove ball bearings
80218.	6218 ZZ	90	160	30	2,2	single-row deep groove ball bearings
80220.	6220 ZZ	100	180	34	3,2	single-row deep groove ball bearings
802213.		65	120	23	1,2	single-row cylindrical roller bearings
802218.		90	160	30	2,38	single-row cylindrical roller bearings
80222.		110	200	38	3,63	single-row deep groove ball bearings
80224.		120	215	40	5,16	single-row deep groove ball bearings
80226.		130	230	40	6,13	single-row deep groove ball bearings
80228.		140	250	42	8,95	single-row deep groove ball bearings
80300.	6300 ZZ	10	30	11	0,057	single-row deep groove ball bearings
80304.	6304 ZZ	20	52	15	0,14	single-row deep groove ball bearings
80305.	6305 ZZ	25	62	17	0,24	single-row deep groove ball bearings
80306.	6306 ZZ	30	72	19	0,34	single-row deep groove ball bearings
80307.	6307 ZZ	35	80	21	0,44	single-row deep groove ball bearings
80308.	6308 ZZ	40	90	23	0,64	single-row deep groove ball bearings
80309.	6309 ZZ	45	100	25	0,8	single-row deep groove ball bearings
80310.	6310 ZZ	50	110	27	1,08	single-row deep groove ball bearings
80311.	6311 ZZ	55	120	29	1,37	single-row deep groove ball bearings
80312.		60	130	31	1,7	single-row deep groove ball bearings
80313.		65	140	33	2,1	single-row deep groove ball bearings
80315.		75	160	37	3,1	single-row deep groove ball bearings
80316.		80	170	39	3,64	single-row deep groove ball bearings
80317.		85	180	41	4,25	single-row deep groove ball bearings

https://nppnovoteh.com

22. CROSS LIST GOST

Bearing No.	Equivalent	Dimensions [mm]			Weight [kg]	Bearing type
		d	D	B		
80319.		95	200	45	5,7	single-row deep groove ball bearings
804704.		22	35	26,5	0,09	needle roller bearings for Cardan's shafts
804707.		33,635	50	37	0,27	needle roller bearings for Cardan's shafts
804709.		44,985	62	37	0,35	needle roller bearings for Cardan's shafts
804805.		24,985	39	30,5	0,14	needle roller bearings for Cardan's shafts
80503.		17	40	16	0,08	single-row deep groove ball bearings
80506.		30	62	20	0,25	single-row deep groove ball bearings
80701.		12	30	8	0,03	single-row deep groove ball bearings
807709.		45	100	43	1,62	tapered roller bearings
807713.		65	150	54	4,8	tapered roller bearings
807813.		65	100	30	1,1	tapered roller bearings
807920.		101,6	161,925	36,5	2,94	tapered roller bearings
80801.		12	30	8	0,02	single-row deep groove ball bearings
808100.		10	26	12	0,02	thrust ball bearings
808106.		30	50	14	0,09	thrust ball bearings
808107.		35	55	16	0,11	thrust ball bearings
808108.		40	60	16	0,14	thrust ball bearings
808205.		25	48	15,5	0,12	thrust ball bearings
808208.		40	64	18	0,27	thrust ball bearings
808209.		45	73	22	0,32	thrust ball bearings
808211.		55	88	24,5	0,61	thrust ball bearings
808212.		60	90	24,5	0,69	thrust ball bearings
808214.		70	103	27	0,81	thrust ball bearings
808216.		80	115	29	0,95	thrust ball bearings
808220.		100	150	32,5	2,3	thrust ball bearings
808320.		100	172	57	6,04	thrust ball bearings
808903.		18	35		0,04	thrust ball bearings
80902.		16	35	12,7	0,06	single-row deep groove ball bearings
8100.	51100	10	24	9	0,02	thrust ball bearings
8101.	51101	12	26	9	0,02	thrust ball bearings
8102.	51102	15	28	9	0,024	thrust ball bearings
8103.	51103	17	30	9	0,027	thrust ball bearings
8104.	51104	20	35	10	0,04	thrust ball bearings
8105.	51105	25	42	11	0,06	thrust ball bearings
8106.	51106	30	47	11	0,07	thrust ball bearings
8107.	51107	35	52	12	0,08	thrust ball bearings
8108.	51108	40	60	13	0,12	thrust ball bearings
8109.	51109	45	65	14	0,15	thrust ball bearings
8110.	51110	50	70	14	0,16	thrust ball bearings
8111.	51111	55	78	16	0,24	thrust ball bearings
8112.	51112	60	85	17	0,29	thrust ball bearings
8113.	51113	65	90	18	0,33	thrust ball bearings
8114.	51114	70	95	18	0,36	thrust ball bearings
8115.	51115	75	100	19	0,41	thrust ball bearings
8116.	51116	80	105	19	0,43	thrust ball bearings
8117.	51117	85	110	19	0,46	thrust ball bearings
8118.	51118	90	120	22	0,68	thrust ball bearings
8120.	51120	100	135	25	1	thrust ball bearings
8122.	51122	110	145	25	1,08	thrust ball bearings
8124.	51124	120	155	25	1,16	thrust ball bearings
8126.	51126	130	170	30	1,92	thrust ball bearings
8128.	51128	140	180	31	2,14	thrust ball bearings
8130.	51130	150	190	31	2,2	thrust ball bearings
8132.	51132	160	200	31	2,42	thrust ball bearings
8134.	51134	170	215	34	3,1	thrust ball bearings
8136.	51136	180	225	34	3,24	thrust ball bearings
8140.	51140	200	250	37	4,41	thrust ball bearings
8144.	51144	220	270	37	4,8	thrust ball bearings
8148.	51148	240	300	45	7,61	thrust ball bearings
81506.		30	62	20	0,26	self-aligning ball bearings
8152.	51152	260	320	45	8,24	thrust ball bearings
8156.	51156	280	350	53	12,3	thrust ball bearings
8164.	51164	320	400	63	18,7	thrust ball bearings
8168.	51168	340	420	64	20	thrust ball bearings
8172.	51172	360	440	65	21,5	thrust ball bearings
8180.	51180	400	480	65	22,9	thrust ball bearings
8201.	51201	12	28	11	0,03	thrust ball bearings
8202.	51202	15	32	12	0,046	thrust ball bearings
8204.	51204	20	40	14	0,08	thrust ball bearings
8205.	51205	25	47	15	0,12	thrust ball bearings
8206.	51206	30	52	16	0,14	thrust ball bearings
8207.	51207	35	62	18	0,22	thrust ball bearings
8208.	51208	40	68	19	0,27	thrust ball bearings
8209.	51209	45	73	20	0,32	thrust ball bearings
8210.	51210	50	78	22	0,39	thrust ball bearings

Bearing No.	Equivalent	Dimensions [mm]			Weight [kg]	Bearing type
		d	D	B		
8211.	51211	55	90	25	0,61	thrust ball bearings
8212.	51212	60	95	26	0,69	thrust ball bearings
8213.	51213	65	100	27	0,75	thrust ball bearings
8214.	51214	70	105	27	0,8	thrust ball bearings
8215.	51215	75	110	27	0,86	thrust ball bearings
8216.	51216	80	115	28	0,95	thrust ball bearings
8217.	51217	85	125	31	1,3	thrust ball bearings
8218.	51218	90	135	35	1,86	thrust ball bearings
8220.	51220	100	150	38	2,55	thrust ball bearings
8222.	51222	110	160	38	2,69	thrust ball bearings
8224.	51224	120	170	39	2,8	thrust ball bearings
8226.	51226	130	190	45	4,22	thrust ball bearings
8228.	51228	140	200	46	4,6	thrust ball bearings
822907.		36,4	50,4	15,15	0,04	single-row cylindrical roller bearings
8230.	51230	150	215	50	6,54	thrust ball bearings
8236.	51236	180	250	56	8,9	thrust ball bearings
8240.	51240	200	280	62	12,7	thrust ball bearings
8244.	51244	220	300	63	13,9	thrust ball bearings
8256.	51256	280	380	80	27,8	thrust ball bearings
8260.	51260	300	420	95	44,2	thrust ball bearings
8268.	51268	340	460	96	52	thrust ball bearings
8272.	51272	360	500	110	70,2	thrust ball bearings
8292.	51292	460	620	130	118	thrust ball bearings
8296.	51296	480	650	135	138	thrust ball bearings
8305.	51305	25	52	18	0,18	thrust ball bearings
8306.	51306	30	60	21	0,27	thrust ball bearings
8307.	51307	35	68	24	0,39	thrust ball bearings
8308.	51308	40	78	26	0,55	thrust ball bearings
8309.	51309	45	85	28	0,69	thrust ball bearings
8310.	51310	50	95	31	1	thrust ball bearings
8311.	51311	55	105	35	1,34	thrust ball bearings
8312.	51312	60	110	35	1,43	thrust ball bearings
8313.	51313	65	115	36	1,57	thrust ball bearings
8314.	51314	70	125	40	2,1	thrust ball bearings
8315.	51315	75	135	44	2,7	thrust ball bearings
8316.	51316	80	140	44	2,8	thrust ball bearings
8318.	51318	90	155	50	3,9	thrust ball bearings
8320.	51320	100	170	55	5,1	thrust ball bearings
8322.	51322	110	190	63	7,9	thrust ball bearings
8324.	51324	120	210	70	10,9	thrust ball bearings
8326.	51326	130	225	75	13,3	thrust ball bearings
8330.	51330	150	250	80	16,7	thrust ball bearings
8336.	51336	180	300	95	28,2	thrust ball bearings
8340.	51340	200	340	110	43,6	thrust ball bearings
836108.		40	68	45	0,58	angular-contact radial ball bearings
836113.		65	100	54	1,22	angular-contact radial ball bearings
836115.		75	115	60	1,99	angular-contact radial ball bearings
836126.		130	200	99	9,84	angular-contact radial ball bearings
836204.		20	47	42	0,33	angular-contact radial ball bearings
836216.		80	140	78	4,25	angular-contact radial ball bearings
8368.	51368	340	540	160	148	thrust ball bearings
836804.		19,1	32	19	0,03	single-row angular contact ball bearings in housing
836906.		28	42	26	0,06	single-row angular contact ball bearings in housing
840.		201	310	51	14,6	single-row deep groove ball bearings
840025.		5	16	6	0,006	single-row deep groove ball bearings
840076.		6	10	2,5	0,008	single-row deep groove ball bearings
8413.	51413	65	140	56	4,2	thrust ball bearings
8420.	51420	100	210	85	14,9	thrust ball bearings
8426.	51426	130	270	110	31,8	thrust ball bearings
846109.		45	75	48	0,78	angular-contact radial ball bearings
846115.		75	115	60	1,97	angular-contact radial ball bearings
846118.		90	140	72	3,93	angular-contact radial ball bearings
846122.		110	170	84	6,42	angular-contact radial ball bearings
846124.		120	180	84	6,16	angular-contact radial ball bearings
8471/560.		560	820	242	430	double-row tapered roller bearings
8471/900.		900	1280	320	1404	double-row tapered roller bearings
847156.		280	420	130	61,8	double-row tapered roller bearings
847164.		320	480	150	95,4	double-row tapered roller bearings
847180.		400	600	190	184	double-row tapered roller bearings
8477/710.		710	1150	380	1581	double-row tapered roller bearings
8477/750.		750	1220	405	1954	double-row tapered roller bearings
847792.		460	730	200	332	double-row tapered roller bearings
847929.		146,075	241,325	165	28,8	double-row tapered roller bearings
847951.		254,025	422,325	160	94,3	double-row tapered roller bearings
848208.		40	69	42	0,7	thrust ball bearings

https://nppnovoteh.com

22. CROSS LIST GOST

Bearing No.	Equivalent	Dimensions [mm]			Weight [kg]	Bearing type
		d	D	B		
848311.		55	110	73	2,7	thrust ball bearings
86.		6	10	1,5	0,025	single-row deep groove ball bearings
864909.		47	56	20	0,08	double-row needle roller and cage assemblies
8717.		85	140	35	1,94	thrust ball bearings
8726.		130	170	27	1,6	thrust ball bearings
8760.		300	435	104	54	thrust ball bearings
8768.		340	440	50	21	thrust ball bearings
8791.		455	650	120	116	thrust ball bearings
889752.		260	540	132	164	cylindrical roller thrust bearings
889764.		320	900	230	860	cylindrical roller thrust bearings
889852.		260	580	145	214	cylindrical roller thrust bearings
89.		9	22	7	0,011	single-row deep groove ball bearings
8903.		17,5	30	8,96	0,003	thrust ball bearings
8908.		42	58	12	0,1	thrust ball bearings
8948.		238	340	70	20,8	thrust ball bearings
897720.		100	190,5	55,3	14,8	double-row tapered roller bearings
900705.		25	42	4	0,023	single-row deep groove ball bearings
900706.		30	42	7	0,027	single-row deep groove ball bearings
900803.		17	26	7	0,012	single-row deep groove ball bearings
900805.		25	37	7	0,021	single-row deep groove ball bearings
900904.		22	35	7	0,024	single-row deep groove ball bearings
900907.		34	45	7	0,028	single-row deep groove ball bearings
9009422.		110	230	73	16,1	cylindrical roller thrust bearings
9009440.		200	400	122	79,4	cylindrical roller thrust bearings
9009580.		400	850	272	830	cylindrical roller thrust bearings
9019424.		120	250	78	20,1	tapered roller thrust bearings
9019436.		180	360	109	55,4	tapered roller thrust bearings
9019452.		260	480	132	114	tapered roller thrust bearings
9019464.		320	580	155	191	tapered roller thrust bearings
9019476.		380	670	175	285	tapered roller thrust bearings
903.		17,7	35	8	0,03	single-row deep groove ball bearings
9039280.	29280	400	540	85	56,5	spherical roller thrust bearings
9039352.	29352	260	420	95	52,6	spherical roller thrust bearings
9039364.	29364	320	500	109	83	spherical roller thrust bearings
9039388.	29388	440	680	145	193	spherical roller thrust bearings
90394/500.	294/500	500	870	224	570	spherical roller thrust bearings
90394/710.	294/710	710	1220	308	1543	spherical roller thrust bearings
9039412.	29412	60	130	42	2,46	spherical roller thrust bearings
9039414.	29414	70	102	48	4,2	spherical roller thrust bearings
9039416.	29416	80	170	54	5,77	spherical roller thrust bearings
9039417.	29417	85	180	58	6,7	spherical roller thrust bearings
9039420.	29420	100	210	67	10,4	spherical roller thrust bearings
9039428.	29428	140	280	85	25,5	spherical roller thrust bearings
9039434.	29434	170	340	103	45,5	spherical roller thrust bearings
9039436.	29436	180	360	109	53,9	spherical roller thrust bearings
9039452.	29452	260	480	132	110	spherical roller thrust bearings
9039488.	29488	440	780	206	440	spherical roller thrust bearings
904700.		10,005	19	9	0,011	needle roller bearings for Cardan's shafts
904900.		10	16	10,2	0,006	needle roller bearings for Cardan's shafts
904902.		14,723	23,841	13,1	0,025	needle roller bearings for Cardan's shafts
906.		32	55	9	0,095	single-row deep groove ball bearings
9102.	81102	15	28	9	0,02	cylindrical roller thrust bearings
9103.	81103	17	30	9	0,02	cylindrical roller thrust bearings
9107.	81107	35	52	12	0,07	cylindrical roller thrust bearings
9108.	81107	40	60	13	0,1	cylindrical roller thrust bearings
9110.	81110	50	70	14	0,14	cylindrical roller thrust bearings
9115.	81115	75	100	19	0,37	cylindrical roller thrust bearings
9130.	81130	150	190	31	1,39	cylindrical roller thrust bearings
9206.	81206	30	52	16	0,12	cylindrical roller thrust bearings
9207.	81207	35	62	18	0,19	cylindrical roller thrust bearings
9209.	81209	45	73	20	0,29	cylindrical roller thrust bearings
9212.	81212	60	95	26	0,64	cylindrical roller thrust bearings
92124.	NUP1024	120	180	28	2,45	single-row cylindrical roller bearings
92140.	NUP1040	200	310	51	15,8	single-row cylindrical roller bearings
9215.	81215	75	110	27	0,81	cylindrical roller thrust bearings
92152.	NUP1052	260	400	65	30,8	single-row cylindrical roller bearings
92205.	NUP205	25	52	15	0,13	single-row cylindrical roller bearings
92206.	NUP206	30	62	16	0,23	single-row cylindrical roller bearings
92207.	NUP207	35	72	17	0,34	single-row cylindrical roller bearings
92217.	NUP217	85	150	28	2,06	single-row cylindrical roller bearings
92218.	NUP218	90	160	30	2,8	single-row cylindrical roller bearings
92220.	NUP220	100	180	34	4,28	single-row cylindrical roller bearings
922205.		25	52	15	0,14	single-row cylindrical roller bearings
92222.	NUP222	110	200	38	5,65	single-row cylindrical roller bearings
92224.	NUP224	120	215	40	6,75	single-row cylindrical roller bearings

Bearing No.	Equivalent	Dimensions [mm]			Weight [kg]	Bearing type
		d	D	B		
92230.	NUP230	150	270	45	12,8	single-row cylindrical roller bearings
922906.		31,793	62,025	27	0,36	single-row cylindrical roller bearings
9230.	81230	150	215	50	5,88	cylindrical roller thrust bearings
92305.	NUP305	25	62	17	0,27	single-row cylindrical roller bearings
92311.	NUP311	55	120	29	2	single-row cylindrical roller bearings
92312.	NUP312	60	130	31	2,23	single-row cylindrical roller bearings
92313.	NUP313	65	140	33	2,25	single-row cylindrical roller bearings
92314.	NUP314	70	150	35	3,31	single-row cylindrical roller bearings
92317.	NUP317	85	180	41	5,56	single-row cylindrical roller bearings
9232.	81232	160	225	51	6,2	cylindrical roller thrust bearings
92328.	NUP328	140	300	62	23,34	single-row cylindrical roller bearings
9236.	81236	180	250	56	9,31	cylindrical roller thrust bearings
9238.	81238	190	270	62	10,4	cylindrical roller thrust bearings
9240.	81240	200	280	62	12,1	cylindrical roller thrust bearings
92410.	NUP410	50	130	31	2,13	single-row cylindrical roller bearings
92412.	NUP412	60	150	35	3,17	single-row cylindrical roller bearings
92417.	NUP417	85	210	52	10,5	single-row cylindrical roller bearings
92426.	NUP426	130	340	78	40	single-row cylindrical roller bearings
9248.	81248	240	340	78	22,3	cylindrical roller thrust bearings
92512.		60	110	28	1,2	single-row cylindrical roller bearings
92513.		65	120	31	1,59	single-row cylindrical roller bearings
92514.		70	125	31	1,5	single-row cylindrical roller bearings
92517.		85	150	36	2,5	single-row cylindrical roller bearings
9260.	81260	300	420	38	40,5	cylindrical roller thrust bearings
92609.	NUP2309	45	100	36	1,44	single-row cylindrical roller bearings
92610.	NUP2310	50	110	40	1,7	single-row cylindrical roller bearings
92613.	NUP2313	65	140	48	3,25	single-row cylindrical roller bearings
92614.	NUP2314	70	150	51	4,45	single-row cylindrical roller bearings
92615.	NUP2315	75	160	55	5,58	single-row cylindrical roller bearings
92616.	NUP2316	80	170	58	6,58	single-row cylindrical roller bearings
92705.		25	55	18	0,21	single-row cylindrical roller bearings
92708.		40	80	18	0,37	single-row cylindrical roller bearings
94056.		6,35	11,112	7,937	0,004	thin-walled needle roller bearings
940705.		25	52	12	0,11	single-row deep groove ball bearings
942/8.		8	14	12	0,008	thin-walled needle roller bearings
943/7.		7	12	13	0,007	thin-walled needle roller bearings
94708.		40	50	16	0,077	thin-walled needle roller bearings
948066.		6	22,6		0,01	thrust ball bearings
948102.		15,3	27,7		0,008	thrust ball bearings
948103.		17,3	29,7		0,009	thrust ball bearings
94908.		38,1	47,5	31,75	0,12	thin-walled needle roller bearings
950118.		90	140	24	1,43	single-row deep groove ball bearings
950119.		95	145	24	1,47	single-row deep groove ball bearings
950120.		100	150	24	1,6	single-row deep groove ball bearings
950138.		190	290	46	10,8	single-row deep groove ball bearings
950218.		90	160	30	2,35	single-row deep groove ball bearings
953613.		65	160	55	6,02	spherical roller bearings
958305.		25	52	18	0,19	thrust ball bearings
958705.		25	56	16	0,15	thrust ball bearings
9588217.		85	124	24,5	1,03	thrust ball bearings in housings
9588218.		90	134	27	1,18	thrust ball bearings in housings
958911.		54	72	12	0,14	thrust ball bearings
96605.		25	38	12	0,03	single-row angular contact ball bearings in housing
968.		340	480	60	39,5	single-row deep groove ball bearings
969961.		305	445	110	68,6	cylindrical roller thrust bearings
971/500.		500	720	100	289	double-row tapered roller bearings
971/560.		560	820	115	414	double-row tapered roller bearings
971/600.		600	870	118	497	double-row tapered roller bearings
971/710.		710	1030	140	803	double-row tapered roller bearings
971/800.		800	1150	155	1067	double-row tapered roller bearings
97168.		340	520	82	118	double-row tapered roller bearings
97172.		360	540	82	127	double-row tapered roller bearings
97180.		400	600	90	179	double-row tapered roller bearings
97184.		420	620	90	187	double-row tapered roller bearings
97188.		440	650	94	213	double-row tapered roller bearings
97192.		460	680	100	248	double-row tapered roller bearings
97212.		60	110	22	2,03	double-row tapered roller bearings
97218.		90	160	30	5,87	double-row tapered roller bearings
97506.		30	62	20,5	0,62	double-row tapered roller bearings
97507.		35	72	23	0,95	double-row tapered roller bearings
97508.		40	80	23,5	1,21	double-row tapered roller bearings
97509.		45	85	23,5	1,26	double-row tapered roller bearings
97510.		50	90	23,5	1,4	double-row tapered roller bearings
97511.		55	100	25	1,87	double-row tapered roller bearings
97512.		60	110	28	2,58	double-row tapered roller bearings

https://nppnovoteh.com

22. CROSS LIST GOST

Bearing No.	Equivalent	Dimensions [mm]			Weight [kg]	Bearing type
		d	D	B		
97514.		70	125	31	3	double-row tapered roller bearings
97515.		75	130	71	3,79	double-row tapered roller bearings
97516.		80	140	33	4,57	double-row tapered roller bearings
97518.		90	160	40	7,58	double-row tapered roller bearings
97519.		95	170	45,5	9,5	double-row tapered roller bearings
97520.		100	180	46	10,88	double-row tapered roller bearings
97521.		105	190	50	13,74	double-row tapered roller bearings
97524.		120	215	58	20,4	double-row tapered roller bearings
97526.		130	230	64	25,3	double-row tapered roller bearings
97530.		150	270	74	38,1	double-row tapered roller bearings
977/520.		520	740	86	230	double-row tapered roller bearings
977/540.		540	790	87	296	double-row tapered roller bearings
977/560.		560	820	120	451	double-row tapered roller bearings
977/720.		720	915	82	284	double-row tapered roller bearings
977/725.		725	915	82	283	double-row tapered roller bearings
97718.		90	161,95	42	8,19	double-row tapered roller bearings
97720.		100	190	55,3	14,8	double-row tapered roller bearings
97724.		120	180	44	8,02	double-row tapered roller bearings
97726.		130	235	63,5	13,6	double-row tapered roller bearings
97727.		135	220	46,5	13,6	double-row tapered roller bearings
97730.		150	255	63,5	28	double-row tapered roller bearings
97732.		160	270	63	30,4	double-row tapered roller bearings
97736.		180	285	45	22,1	double-row tapered roller bearings
97741.		205	320	67	41	double-row tapered roller bearings
97744.		220	340	45	29,3	double-row tapered roller bearings
97745.		225	350	65	51	double-row tapered roller bearings
97746.		230	355	65	44,6	double-row tapered roller bearings
97748.		240	370	55	44,6	double-row tapered roller bearings
97752.		260	430	82	92,3	double-row tapered roller bearings
97766.		330	560	82	179	double-row tapered roller bearings
97768.		340	500	66	87	double-row tapered roller bearings
97770.		350	590	88	207	double-row tapered roller bearings
97772.		360	530	66	104	double-row tapered roller bearings
97773.		365	535	81	119	double-row tapered roller bearings
977760.		300	500	82	132	double-row tapered roller bearings
97780.		400	590	81	151	double-row tapered roller bearings
97784.		420	620	85	172	double-row tapered roller bearings
97798.		490	640	81	140	double-row tapered roller bearings
97814.		70	110	16	1,23	double-row tapered roller bearings
97820.		101	168	40	8,5	double-row tapered roller bearings
97825.		127	206,4	47	13,08	double-row tapered roller bearings
97830.		150	254	63,5	27,7	double-row tapered roller bearings
97841.		205	317,5	67	40	double-row tapered roller bearings
97852.		260	400	67	59,4	double-row tapered roller bearings
97860.		300	440	58	60,7	double-row tapered roller bearings
97918.		90	139,974	30,5	3,41	double-row tapered roller bearings
97919.		95	144,983	38	5,11	double-row tapered roller bearings
97920.		100	150	42	5,26	double-row tapered roller bearings
97925.		127,025	235	65	25,3	double-row tapered roller bearings
97927.		133,375	215,925	45,7	13,7	double-row tapered roller bearings
97928.		136,545	190,525	38,35	7,12	double-row tapered roller bearings
97930.		152,4	270	45	24,8	double-row tapered roller bearings
97931.		152,425	244,5	47	17,6	double-row tapered roller bearings
97944.		220	300	56	24,7	double-row tapered roller bearings
980055.		5	16	5,5	0,006	single-row deep groove ball bearings
980065.		5	16	5,5	0,006	single-row deep groove ball bearings
980067.		7	24	9	0,025	single-row deep groove ball bearings
980077.		7	19	6	0,009	single-row deep groove ball bearings
980079.		9	24	9	0,017	single-row deep groove ball bearings
980085.		5	20	7	0,012	single-row deep groove ball bearings
980700.		10	37	12	0,071	single-row deep groove ball bearings
980704.		20	42	10	0,062	single-row deep groove ball bearings
980705.		25	52	12	0,12	single-row deep groove ball bearings
980800.		10	30	13	0,034	single-row deep groove ball bearings
980805.		25	37	7	0,021	single-row deep groove ball bearings
980912.		58	78	18	0,13	single-row deep groove ball bearings
9809352.		260	420	95	57,1	cylindrical roller thrust bearings
98206.		30,1	53	16	0,14	thrust ball bearings in housings
98316.		80	145	45	2,9	thrust ball bearings in housings
986711.		55	90	23	0,4	single-row angular contact ball bearings in housing
986714.		70	105	21	0,52	single-row angular contact ball bearings in housing
986811.		55	90	22	0,33	single-row angular contact ball bearings in housing
9889322.		110	190	48	6,4	cylindrical roller thrust bearings
9889468.		340	620	170	246	cylindrical roller thrust bearings
9889492.		460	800	206	505	cylindrical roller thrust bearings

Bearing No.	Equivalent	Dimensions [mm]			Weight [kg]	Bearing type
		d	D	B		
994706.		30	45	36	0,23	needle roller bearings
994713.		65	80	31	0,38	needle roller bearings
998911.		53	72	15,5	0,17	thrust ball bearings
998912.		57	74	17,5	0,23	thrust ball bearings
998916.		78	98	15	0,3	thrust ball bearings
998920.		101	122	16	0,43	thrust ball bearings

https://nppnovoteh.com

23. INDEX



https://nppnovoteh.com

23. INDEX

Index	d [mm]	Tab.No
00050/00150	12,7	4.2
02473/02420	25,4	4.2
02474/02420	28,575	4.2
02475/02420	31,75	4.2
02476/02420	31,75	4.2
02872/02820	28,575	4.2
02875/02820	31,75	4.2
02876/02820	31,75	4.2
02877/02820	34,925	4.2
02878/02820	34,925	4.2
03062/03162	15,875	4.2
05062/05185	15,875	4.2
05066/05185	16,993	4.2
05075/05185	19,05	4.2
05079/05185	19,987	4.2
07079/07196	20	4.2
07087/07196	22,225	4.2
07093/07196	23,812	4.2
07096/07196	25,159	4.2
07097/07196	25	4.2
07098/07196	24,981	4.2
07100/07196	25,4	4.2
07100/07204	25,4	4.2
08125/08231	31,75	4.2
09062/09195	15,875	4.2
09067/09194	19,05	4.2
09067/09195	19,05	4.2
09067/09196	19,05	4.2
09074/09195	19,05	4.2
09078/09195	19,05	4.2
09081/09195	20,625	4.2
100.	10	22.1
1000084.	4	22.1
1000085.	5	22.1
1000088.	8	22.1
1000091.	1	22.1
1000092.	2	22.1
1000093.	3	22.1
1000094.	4	22.1
1000095.	5	22.1
1000096.	6	22.1
1000097.	7	22.1
1000098.	8	22.1
1000099.	9	22.1
1000800.	10	22.1
1000801.	12	22.1
1000802.	15	22.1
1000804.	20	22.1
1000805.	25	22.1
1000806.	30	22.1
1000807.	35	22.1
1000812.	60	22.1
1000813.	65	22.1
1000814.	70	22.1
1000816.	80	22.1
1000817.	85	22.1
1000818.	90	22.1
1000819.	95	22.1
1000821.	105	22.1
1000822.	110	22.1
1000824.	120	22.1
1000828.	140	22.1
1000830.	150	22.1
1000832.	160	22.1
1000834.	170	22.1
1000836.	180	22.1
1000840.	200	22.1
1000844.	220	22.1
1000848.	240	22.1
1000856.	280	22.1
1000864.	320	22.1
1000868.	340	22.1
1000872.	360	22.1
1000876.	380	22.1
1000892.	460	22.1
1000896.	480	22.1
1000900.	10	22.1
1000901.	12	22.1
1000902.	15	22.1
1000903.	17	22.1
1000904.	20	22.1
1000905.	25	22.1
1000906.	30	22.1
1000907.	35	22.1
1000908.	40	22.1
1000909.	45	22.1
1000911.	55	22.1
1000912.	60	22.1
1000913.	65	22.1
1000915.	75	22.1
1000916.	80	22.1
1000917.	85	22.1
1000918.	90	22.1
1000919.	95	22.1
1000920.	100	22.1
1000921.	105	22.1
1000922.	110	22.1
1000924.	120	22.1
1000926.	130	22.1
1000928.	140	22.1
1000930.	150	22.1
1000932.	160	22.1
1000934.	170	22.1
1000940.	200	22.1
1000944.	220	22.1
1000948.	240	22.1
1000952.	260	22.1
1000956.	280	22.1
1000964.	320	22.1
1000968.	340	22.1
1002912.	60	22.1
1002916.	80	22.1
1002926.	130	22.1
1002932.	160	22.1
100301.	12	22.1
1005.	5	22.1
1006.	6	22.1
1006094.	4	22.1
1006095.	5	22.1
1006096.	6	22.1
1007.	7	22.1
100700.	10	22.1
100704.	20	22.1
100720.	100	22.1
100752.	260	22.1
10078/850.	850	22.1
10079/1800.	1800	22.1
10079/500.	500	22.1
10079/530.	530	22.1
10079/560.	560	22.1
10079/630.	630	22.1
10079/710.	710	22.1
10079/900.	900	22.1
1007976.	380	22.1
1007992.	460	22.1
1007996.	480	22.1
1008.	8	22.1
1009.	9	22.1
101.	12	22.1
102.	15	22.1
102205.	25	22.1
102206.	30	22.1
102208.	40	22.1
102209.	45	22.1
102210.	50	22.1
102211.	55	22.1
102212.	60	22.1
102304.	20	22.1
102305.	25	22.1
102307.	35	22.1
102308.	40	22.1
102309.	45	22.1
102310.	50	22.1
102312.	60	22.1
102313.	65	22.1
102314.	70	22.1
102316.	80	22.1
102407.	35	22.1
102408.	40	22.1
102409.	45	22.1
102410.	50	22.1
102416.	80	22.1
102506.	30	22.1
102605.	25	22.1
102606.	30	22.1
102618.	90	22.1
1027305.	25	22.1
1027307.	35	22.1
1027314.	70	22.1
1027320.	100	22.1
1027324.	120	22.1
1027328.	140	22.1
1027336.	180	22.1
1027340.	200	22.1
102805.	25	22.1
103.	17	22.1
1032724.	120	22.1
1032752.	260	22.1
1032868.	340	22.1
1032880.	400	22.1
1032920.	100	22.1
1032924.	120	22.1
1032928.	140	22.1
1032930.	150	22.1
1032948.	240	22.1
1032952.	260	22.1
1032956.	280	22.1
1032964.	320	22.1
1032980.	400	22.1
104.	20	22.1
105.	25	22.1
106.	30	22.1
107.	35	22.1
1077284.	420	22.1
10777/500.	500	22.1
10777/560.	560	22.1
10777/670.	670	22.1
10777/750.	750	22.1
10777/850.	850	22.1
1077756.	280	22.1
1077776.	380	22.1
1077792.	460	22.1
1077796.	480	22.1
1077988.	440	22.1
1077996.	480	22.1
108	8	3.1
108.	40	22.1
1080095.	5	22.1
1080097.	7	22.1
108615.	75	22.1
108710.	50	22.1
108714.	70	22.1
108804.	20	22.1
108806.	30,1	22.1
108810.	50	22.1
108904.	20,88	22.1
108905.	25,1	22.1
108906.	27,1	22.1
109.	45	22.1
1097760.	300	22.1
1097768.	340	22.1
1097776.	380	22.1
1097780.	400	22.1
1097784.	420	22.1
10979/500.	500	22.1
10979/530.	530	22.1
10979/560.	560	22.1
10979/600.	600	22.1
10979/630.	630	22.1
10979/710.	710	22.1
10979/800.	800	22.1
10979/850.	850	22.1
10979/950.	950	22.1
1097976.	380	22.1
1097980.	400	22.1
1097992.	460	22.1
1097996.	480	22.1
110.	50	22.1
1105.	25	22.1
1106.	30	22.1
111.	55	22.1
111205.	25	22.1
111206.	30	22.1
111207.	35	22.1
111208.	40	22.1
111209.	45	22.1
111210.	50	22.1
111211.	55	22.1
111212.	60	22.1
111213.	65	22.1
111215.	75	22.1
111216.	80	22.1
111217.	85	22.1
111218.	90	22.1
111219.	95	22.1
111220.	100	22.1
111222.	110	22.1
111316.	80	22.1
111318.	90	22.1
111320.	100	22.1
111322.	110	22.1
111506.	30	22.1
111507.	35	22.1
111606.	30	22.1
111607.	35	22.1
111608.	40	22.1
111610.	50	22.1
111612.	60	22.1
11162/11300	41,275	4.2
11162/11315	41,275	4.2
112.	60	22.1
11204	20	3.1
11204.	25	22.1
11205	25	3.1
11205.	30	22.1
11206	30	3.1
11206.	35	22.1
11207	35	3.1
11207.	40	22.1
11208	40	3.1
11208.	45	22.1
11209	45	3.1
11209.	50	22.1
11210	50	3.1
11210.	55	22.1
11211	55	3.1
11211.	60	22.1
11212	60	3.1
11212.	65	3.1
11213.	75	22.1
11214.	80	22.1
11215.	85	22.1
11216.	90	22.1
11217.	95	22.1
11218.	100	22.1
11220.	110	22.1
112741.	205	22.1
113.	65	22.1
11304	20	3.1
11305	25	3.1
11305.	30	22.1
11306	30	3.1
11306.	35	22.1
11307	35	3.1
11308	40	3.1
11308.	45	22.1
11309	45	3.1
11309.	50	22.1
11310	50	3.1
11310.	55	22.1
11311.	60	22.1
11312.	65	22.1
11314.	80	22.1
11315.	75	22.1
11316.	90	22.1
11318.	100	22.1
11319.	100	22.1
11320.	110	22.1
113517.	85	22.1
113520.	100	22.1
113528.	140	22.1
113530.	150	22.1
113532.	160	22.1
113534.	170	22.1
113536.	180	22.1
113540.	200	22.1
113552.	260	22.1
113556.	280	22.1
113624.	120	22.1
113632.	160	22.1
113636.	180	22.1
113638.	190	22.1
113640.	200	22.1
113652.	260	22.1
113656.	280	22.1
114.	70	22.1
115.	75	22.1
11505.	25	22.1
11505.	30	22.1
11506.	35	22.1
11508.	45	22.1
11509.	50	22.1
11510.	55	22.1
11590/11520	15,875	4.2
116.	80	22.1
1160305.	25	22.1
11606.	35	22.1
11609.	50	22.1
11611.	60	22.1
11612.	65	22.1
116126.	130	22.1
116222.	110	22.1
117.	85	22.1
1176720.	100	22.1
1176724.	120	22.1
1176940.	200	22.1
117732.	160	22.1
118.	90	22.1
1180304.	20	22.1
1180305.	25	22.1
119.	95	22.1
120.	100	22.1
1200	10	3.1
1200.	10	22.1
1201	12	3.1
1201.	12	22.1
1202	15	3.1
1202.	15	22.1
1203	17	3.1
1203.	17	22.1
1204	20	3.1
1204 K	17	3.1
1204.	20	22.1
1205	25	3.1
1205 K	20	3.1
1205.	25	22.1
1206	30	3.1
1206 K	25	3.1
1206.	30	22.1
1207	35	3.1
1207 K	30	3.1
1207.	35	22.1
1208	40	3.1
1208 K	35	3.1
1208.	40	22.1
1209	45	3.1
1209 K	40	3.1
121.	105	22.1
1210	50	3.1
1210 K	45	3.1
1210.	50	22.1
1211	55	3.1
1211 K	50	3.1
1211.	55	22.1
12115.	75	22.1
1212	60	3.1
1212 K	55	3.1
1212.	60	22.1
1213	65	3.1
1213 K	60	3.1
1213.	65	22.1
1214	70	3.1
1214 K	60	3.1
1214.	70	22.1
1215	75	3.1
1215 K	65	3.1
1215.	75	22.1
1216	80	3.1
1216 K	70	3.1
1216.	80	22.1
12168/12303	42,862	4.2
1217	85	3.1
1217 K	75	3.1
1217.	85	22.1
12175/12303	44,45	4.2
1218	90	3.1
1218 K	80	3.1
1218.	90	22.1
1219	95	3.1
1219 K	85	3.1
122.	110	22.1
1220	100	3.1
1220 K	90	3.1
1220.	100	22.1
12202.	15	22.1
12204.	20	22.1
12207.	35	22.1
12208.	40	22.1
1221	105	3.1
1221 K	95	3.1
1221.	105	22.1
12210.	50	22.1
12211.	55	22.1
12212.	60	22.1
12213.	65	22.1
12218.	90	22.1
1222	110	3.1
1222 K	95	3.1
12228.	140	22.1
1224	120	3.1
1224 K	110	3.1
1224.	120	22.1
1226	130	3.1
122729.	145	22.1
12302.	15	22.1
12307.	35	22.1
12308.	40	22.1
12309.	45	22.1
12310.	50	22.1
12311.	55	22.1

https://nppnovoteh.com

23. INDEX

Index	d [mm]	Tab.No
12312.	60	22.1
12315.	75	22.1
12316.	80	22.1
12318.	90	22.1
12320.	100	22.1
1236918.	90	22.1
124.	120	22.1
12416.	80	22.1
12418.	90	22.1
1246918.	90	22.1
1246922.	110	22.1
1246932.	160	22.1
1246932.	160	22.1
12507.	35	22.1
12514.	70	22.1
12526.	130	22.1
12580/12520	20,638	4.2
126	6	3.1
126.	130	22.1
12609.	45	22.1
12613.	65	22.1
126220.	100	22.1
126805.	25	22.1
127	7	3.1
12728.	140	22.1
12736.	180	22.1
12746.	230	22.1
127509.	45	22.1
128.	140	22.1
1280/1220	22,225	4.2
129	9	3.1
13.	3	22.1
130.	150	22.1
1300	10	3.1
1301	12	3.1
1301.	12	22.1
1302	15	3.1
1302.	15	22.1
1303	17	3.1
1303.	17	22.1
1304	20	3.1
1304 K	17	3.1
1304.	20	22.1
1305	25	3.1
1305 K	20	3.1
1305.	25	22.1
1306	30	3.1
1306 K	25	3.1
1306.	30	22.1
1307	35	3.1
1307 K	30	3.1
1307.	35	22.1
1308	40	3.1
1308 K	35	3.1
1308.	40	22.1
1309	45	3.1
1309 K	40	3.1
1309.	45	22.1
1310	50	3.1
1310 K	45	3.1
1310.	50	22.1
1311	55	3.1
1311 K	50	3.1
1311.	55	22.1
1312	60	3.1
1312 K	55	3.1
1312.	60	22.1
1313	65	3.1
1313 K	60	3.1
1313.	65	22.1
1314	70	3.1
1314 K	60	3.1
1314.	70	22.1
1315	75	3.1
1315 K	65	3.1
1315.	75	22.1
1316	80	3.1
1316 K	70	3.1
1316.	80	22.1
1317	85	3.1
1317 K	75	3.1
1317.	85	22.1
13175/13318	44,45	4.2
1318	90	3.1
1318 K	80	3.1
1318.	90	22.1
13181/13318	46,038	4.2
1319	95	3.1
1319 K	85	3.1
132.	160	22.1
1320	100	3.1
1320 K	90	3.1
1320.	100	22.1
1321	105	3.1
1321 K	95	3.1
1322	110	3.1
1322 K	100	3.1
134.	170	22.1
134901.	12	22.1
134902.	15	22.1
135	5	3.1
13518.	90	22.1
13520.	100	22.1
13525.	125	22.1
13528.	140	22.1
13530.	150	22.1
13532.	160	22.1
13534.	170	22.1
13536.	180	22.1
13548.	240	22.1
136.	180	22.1
13611.	55	22.1
13620.	100	22.1
13622.	110	22.1
13628.	140	22.1
13630.	150	22.1
13632.	160	22.1
13634.	170	22.1
13636.	180	22.1
13685/13621	38,1	4.2
13687/13620	38,1	4.2
13687/13621	38,1	4.2
138.	190	22.1
1380/1328	22,225	4.2
1380/1329	22,225	4.2
13889/13830	38,1	4.2
13889/13836	38,1	4.2
140.	200	22.1
1406	30	3.1
1407	35	3.1
1408	40	3.1
1409	45	3.1
1410	50	3.1
1411	55	3.1
14116/14274	30,226	4.2
14116/14276	30,226	4.2
14116/14283	30,226	4.2
14117A/14276	30	4.2
1412	60	3.1
1412.	60	22.1
14124/14276	31,75	4.2
14125A/14276	31,75	4.2
14130/14274	33,338	4.2
14130/14276	33,338	4.2
14131/14276	33,338	4.2
14137A/14276	34,925	4.2
14138A/14276	34,925	4.2
14139/14276	34,976	4.2
142220.	100	22.1
1436900.	10	22.1
144.	220	22.1
14585/14525	34,925	4.2
148.	240	22.1
1500.	10	22.1
150106.	30	22.1
150110.	50	22.1
150200.	10	22.1
150204.	20	22.1
150206.	30	22.1
150208.	40	22.1
150210.	50	22.1
150212.	60	22.1
150217.	85	22.1
150304.	20	22.1
150307.	35	22.1
150308.	40	22.1
150309.	45	22.1
150312.	60	22.1
1504.	20	22.1
150409.	45	22.1
1505.	25	22.1
1506.	30	22.1
1507.	35	22.1
1508.	40	22.1
1509.	45	22.1
1510.	50	22.1
15100/15245	25,4	4.2
15101/15243	25,4	4.2
15101/15244	25,4	4.2
15101/15245	25,4	4.2
15101/15250	25,4	4.2
15102/15245	25,4	4.2
15103/15245	26,157	4.2
15106/15245	26,988	4.2
15112/15245	28,575	4.2
15113/15245	28,575	4.2
15116/15245	30,112	4.2
15117/15245	29,987	4.2
15118/15245	30,213	4.2
15119/15245	30,213	4.2
1512.	60	22.1
15120/15245	30,213	4.2
15123/15245	31,75	4.2
15125/15245	31,75	4.2
15126/15245	31,75	4.2
1513.	65	22.1
1516.	80	22.1
1517.	85	22.1
152.	260	22.1
153516.	80	22.1
153518.	90	22.1
153519.	95	22.1
153522.	110	22.1
153524.	120	22.1
153526.	130	22.1
153608.	40	22.1
153611.	55	22.1
153612.	60	22.1
153614.	70	22.1
153615.	75	22.1
153616.	80	22.1
153618.	90	22.1
153620.	100	22.1
153634.	170	22.1
1546908.	40	22.1
15578/15523	25,4	4.2
15580/15523	26,988	4.2
15590/15520	28,575	4.2
15590/15523	28,575	4.2
156.	280	22.1
160/500	500	1.2
16001	12	1.2
16001 ZZ	12	1.4
16002	15	1.2
16002 ZZ	15	1.4
160026.	6	22.1
16003	17	1.2
16003 ZZ	17	1.4
16004	20	1.2
16004 ZZ	20	1.4
16005	25	1.2
16005 ZZ	25	1.4
16006	30	1.2
16006 ZZ	30	1.4
16007	35	1.2
16007 ZZ	35	1.4
16008	40	1.2
16008 ZZ	40	1.4
16009	45	1.2
16009 ZZ	45	1.4
16010	50	1.2
16010 ZZ	50	1.4
160105.	25	22.1
160106.	30	22.1
160109.	45	22.1
16011	55	1.2
160112.	60	22.1
16012	60	1.2
16013	65	1.2
16014	70	1.2
16015	75	1.2
16016	80	1.2
16017	85	1.2
16018	90	1.2
16019	95	1.2
16020	100	1.2
160200.	10	22.1
160203.	17	22.1
160204.	20	22.1
160205.	25	22.1
160206.	30	22.1
160207.	35	22.1
160208.	40	22.1
160209.	45	22.1
16021	105	1.2
16022	110	1.2
16024	120	1.2
16026	130	1.2
16028	140	1.2
16030	150	1.2
160303.	17	22.1
160304.	20	22.1
160306.	30	22.1
160307.	35	22.1
160312.	60	22.1
16032	160	1.2
16034	170	1.2
16036	180	1.2
16038	190	1.2
1604.	20	22.1
16040	200	1.2
16044	220	1.2
16048	240	1.2
1605.	25	22.1
160501.	12	22.1
160502.	15	22.1
160503.	17	22.1
160504.	20	22.1
160505.	25	22.1
160506.	30	22.1
160507.	35	22.1
160508.	40	22.1
16052	260	1.2
16056	280	1.2
1606.	30	22.1
16060	300	1.2
160605.	25	22.1
160606.	30	22.1
160609.	45	22.1
16064	320	1.2
16068	340	1.2
1607.	35	22.1
160703.	17	22.1
160707.	35	22.1
16072	360	1.2
16076	380	1.2
1608.	40	22.1
16080	400	1.2
16084	420	1.2
16088	440	1.2
1609.	45	22.1
160902.	16	22.1
16092	460	1.2
16096	480	1.2
1610.	50	22.1
16100	10	1.2
16101	12	1.2
1611.	55	22.1
1612.	60	22.1
1613.	65	22.1
16137/16284	34,925	4.2
1614.	70	22.1
16150/16282	38,1	4.2
16150/16284	38,1	4.2
1616.	80	22.1
164.	320	22.1
166805.	25	22.1
168118.	90	22.1
168124.	120	22.1
168130.	150	22.1
168132.	160	22.1
168140.	200	22.1
168148.	240	22.1
168160.	300	22.1
1687/1060.	1060	22.1
1688/1060.	1060	22.1
17.	7	22.1
17098/17244	24,981	4.2
17118/17244	29,987	4.2
17119/17244	30,162	4.2
172.	360	22.1
1730.	150	22.1
174708.	40	22.1
1755/1729	22,225	4.2
17580/17520	15,875	4.2
176130.	150	22.1
176134.	170	22.1
176144.	220	22.1
176208.	40	22.1
176211.	55	22.1
176212.	60	22.1
176215.	75	22.1
176218.	90	22.1
176220.	100	22.1
176222.	110	22.1
176226.	130	22.1
176228.	140	22.1
176232.	160	22.1
176234.	170	22.1
176236.	180	22.1
176238.	190	22.1
176240.	200	22.1
176252.	260	22.1
176268.	340	22.1
176303.	17	22.1
176304.	20	22.1
176305.	25	22.1
176307.	35	22.1
176308.	40	22.1
176309.	45	22.1
176310.	50	22.1
176311.	55	22.1
176313.	65	22.1
176314.	70	22.1
176317.	85	22.1
176320.	100	22.1
17713.	65	22.1
17716.	80	22.1
17717.	85	22.1
17720.	100	22.1
17722.	110	22.1
17724.	120	22.1
17744.	220	22.1
1775/1729	19,05	4.2
1779/1729	23,812	4.2
1780/1729	25,4	4.2
17810.	50	22.1
17814.	70	22.1
17818.	90	22.1
17819.	95	22.1
17824.	120	22.1
17828.	140	22.1
17836.	180	22.1
178810.	50	22.1
178811.	55	22.1
178812.	60	22.1
178813.	65	22.1
178814.	70	22.1
178815.	75	22.1
178816.	80	22.1
178817.	85	22.1
178818.	90	22.1
178819.	95	22.1
178820.	100	22.1
178822.	110	22.1
178824.	120	22.1
178826.	130	22.1
178828.	140	22.1
178830.	150	22.1
178832.	160	22.1
178834.	170	22.1
178836.	180	22.1
178840.	200	22.1
178908.	42	22.1
178916.	84	22.1
178920.	103	22.1
178922.	114	22.1
178928.	145	22.1
17920.	98,425	22.1
17928.	140	22.1
18.	8	22.1
1800.	10	22.1
180026.	6	22.1
180105.	25	22.1
180106.	30	22.1
180109.	45	22.1
180112.	60	22.1
180114.	70	22.1
180200.	10	22.1
180201.	12	22.1
180203.	17	22.1
180204.	20	22.1
180205.	25	22.1
180206.	30	22.1
180207.	35	22.1
180208.	40	22.1
180209.	45	22.1
180210.	50	22.1
180212.	60	22.1
180213.	65	22.1
180303.	17	22.1
180304.	20	22.1
180305.	25	22.1
180306.	30	22.1
180307.	35	22.1
180308.	40	22.1
180309.	45	22.1
180310.	50	22.1
180311.	55	22.1
180312.	60	22.1
180500.	10	22.1
180501.	12	22.1
180502.	15	22.1

https://nppnovoteh.com

Index	d [mm]	Tab.No
180503.	17	22.1
180504.	20	22.1
180506.	30	22.1
180508.	40	22.1
180510.	50	22.1
180600.	10	22.1
180602.	15	22.1
180603.	17	22.1
180604.	20	22.1
180604.	20	22.1
180605.	25	22.1
180606.	30	22.1
180607.	30	22.1
180609.	45	22.1
180610.	50	22.1
180612.	60	22.1
180707.	35	22.1
180707.	35	22.1
18200/18337	50,8	4.2
18204.	20	22.1
18205.	25	22.1
18206.	30	22.1
18207.	35	22.1
18208.	40	22.1
18209.	45	22.1
18210.	50	22.1
18211.	55	22.1
18212.	60	22.1
18213.	65	22.1
18214.	70	22.1
18217.	85	22.1
18220.	100	22.1
18222.	110	22.1
18224.	120	22.1
18226.	130	22.1
18228.	140	22.1
18312.	60	22.1
18320.	100	22.1
18322.	110	22.1
18324.	120	22.1
1840094.	4	22.1
1840095.	5	22.1
18413.	65	22.1
18426.	130	22.1
1846922.	110	22.1
18587/18520	39,688	4.2
18590/18520	41,275	4.2
18685/18620	44,45	4.2
18690/18620	46,038	4.2
18780/18720	46,038	4.2
18786.	430	22.1
18790/18720	50,8	4.2
18790/18724	50,8	4.2
18886.	430	22.1
19138/19283	34,976	4.2
19150/19268	38,1	4.2
19150/19281	38,1	4.2
19150/19283	38,1	4.2
19742.	210	22.1
1975/1932	22,225	4.2
19752.	260	22.1
19760.	300	22.1
1985/1930	28,575	4.2
1985/1931	28,575	4.2
1985/1932	28,575	4.2
1986/1922	25,4	4.2
1987/1932	26,975	4.2
1988/1922	28,575	4.2
1988/1932	28,575	4.2
200.	10	22.1
2000083.	3	22.1
2000087.	7	22.1
2000809.	45	22.1
2002780.	400	22.1
20028/670.	670	22.1
2002826.	130	22.1
2002872.	360	22.1
2007104.	20	22.1
2007105.	25	22.1
2007106.	30	22.1
2007107.	35	22.1
2007108.	40	22.1
2007109.	45	22.1
2007110.	50	22.1
2007111.	55	22.1
2007112.	60	22.1
2007113.	65	22.1
2007114.	70	22.1
2007115.	75	22.1
2007116.	80	22.1

Index	d [mm]	Tab.No
2007117.	85	22.1
2007118.	90	22.1
2007119.	95	22.1
2007120.	100	22.1
2007121.	105	22.1
2007122.	110	22.1
2007124.	120	22.1
2007128.	140	22.1
2007132.	160	22.1
2007136.	180	22.1
2007138.	190	22.1
2007140.	200	22.1
2007144.	220	22.1
2007148.	240	22.1
2007152.	260	22.1
2007156.	280	22.1
2007160.	300	22.1
2007164.	320	22.1
20078/1320.	1320	22.1
20078/850.	850	22.1
20079/1320.	1320	22.1
2007913.	65	22.1
2007915.	75	22.1
2007928.	140	22.1
2007934.	170	22.1
2007938.	190	22.1
2007944.	220	22.1
2007948.	240	22.1
2007952.	260	22.1
2007960.	300	22.1
2007968.	340	22.1
2007972.	360	22.1
201.	12	22.1
202.	15	22.1
20204 C	20	7.1
20205 C	25	7.1
20205 KC	25	7.1
20206 C	30	7.1
20206 KC	30	7.1
20207 C	35	7.1
20207 KC	35	7.1
20208 C	40	7.1
20208 KC	40	7.1
20209 C	45	7.1
20209 KC	45	7.1
20210 C	50	7.1
20210 KC	50	7.1
20211 C	55	7.1
20211 KC	55	7.1
20212 C	60	7.1
20212 KC	60	7.1
20213 C	65	7.1
20213 KC	65	7.1
20214 C	70	7.1
20215 C	75	7.1
20215 KC	75	7.1
20216 C	80	7.1
20216 KC	80	7.1
20217 C	85	7.1
20217 KC	85	7.1
20218 C	90	7.1
20218 KC	90	7.1
20219 C	95	7.1
20220 C	100	7.1
20220 KC	100	7.1
20221 C	105	7.1
20222 C	110	7.1
20222 KC	110	7.1
20224 C	120	7.1
20224 KC	120	7.1
20226 C	130	7.1
20226 KC	130	7.1
20228 C	140	7.1
20228 KC	140	7.1
20230 C	150	7.1
20230 KC	150	7.1
20232 C	160	7.1
20232 KC	160	7.1
20234 C	170	7.1
20236 C	180	7.1
20238 C	190	7.1
20240 C	200	7.1
20244 C	220	7.1
20248 C	240	7.1
20252 C	260	7.1
203.	17	22.1
20304 C	20	7.1
20305 C	25	7.1
20306 C	30	7.1
20307 C	35	7.1

Index	d [mm]	Tab.No
20308 C	40	7.1
20309 C	45	7.1
20310 C	50	7.1
20311 C	55	7.1
20311 KC	55	7.1
20312 C	60	7.1
20312 KC	60	7.1
20313 C	65	7.1
20313 KC	65	7.1
20314 C	70	7.1
20315 C	75	7.1
20316 C	80	7.1
20317 C	85	7.1
20318 C	90	7.1
20318 KC	90	7.1
20319 C	95	7.1
20320 C	100	7.1
20320 KC	100	7.1
2032172.	360	22.1
20322 C	110	7.1
20324 C	120	7.1
20326 C	130	7.1
2032780.	400	22.1
20328 C	140	7.1
20329/500.	500	22.1
20330 C	150	7.1
204.	20	22.1
205.	25	22.1
206.	30	22.1
2067708.	41,275	22.1
2067712.	60,325	22.1
207.	35	22.1
20703.	17	22.1
2077140.	200	22.1
2077144.	220	22.1
2077148.	240	22.1
2077152.	260	22.1
2077156.	280	22.1
2077460.	300	22.1
2077960.	300	22.1
2077960.	320	22.1
208.	40	22.1
20803.	17	22.1
209.	45	22.1
2092992.	460	22.1
2097115.	75	22.1
2097132.	160	22.1
2097136.	180	22.1
2097140.	200	22.1
2097144.	220	22.1
2097148.	240	22.1
2097152.	260	22.1
2097156.	280	22.1
2097724.	120	22.1
2097726.	130	22.1
2097730.	150	22.1
2097732.	160	22.1
2097736.	180	22.1
2097738.	190	22.1
2097740.	200	22.1
2097744.	220	22.1
2097748.	240	22.1
2097752.	260	22.1
2097930.	150	22.1
2097936.	180	22.1
2097938.	190	22.1
2097940.	200	22.1
2097944.	220	22.1
2097948.	240	22.1
2097952.	260	22.1
2097960.	300	22.1
2097968.	340	22.1
2097972.	360	22.1
210.	50	22.1
2104.	20	22.1
21063/21212	15,875	4.2
21075/21212	19,05	4.2
211.	55	22.1
2110.	50	22.1
2111.	55	22.1
2113.	65	22.1
2118.	90	22.1
212.	60	22.1
2124.	120	22.1
212792.	460	22.1
213.	65	22.1
21305 CW33	25	7.1
21306 CW33	30	7.1
21306 KCW33	30	7.1
21307 CW33	35	7.1

Index	d [mm]	Tab.No
21307 KCW33	35	7.1
21308 CW33	40	7.1
21308 KCW33	40	7.1
21309 CW33	45	7.1
21309 KCW33	45	7.1
21310 CW33	50	7.1
21310 KCW33	50	7.1
21311 CW33	55	7.1
21311 KCW33	55	7.1
21312 CW33	60	7.1
21312 KCW33	60	7.1
21313 CW33	65	7.1
21313 KCW33	65	7.1
21314 CW33	70	7.1
21314 KCW33	70	7.1
21315 CW33	75	7.1
21315 KCW33	75	7.1
21316 CW33	80	7.1
21316 KCW33	80	7.1
21317 CW33	85	7.1
21317 KCW33	85	7.1
21318 CW33	90	7.1
21318 KCW33	90	7.1
21319 CW33	95	7.1
21319 KCW33	95	7.1
2132.	160	22.1
21320 CW33	100	7.1
21320 KCW33	100	7.1
21322 CW33	110	7.1
21322 KCW33	110	7.1
214.	70	22.1
215.	75	22.1
216.	80	22.1
217.	85	22.1
218.	90	22.1
2180120.	100	22.1
21821/670.	670	22.1
219.	95	22.1
220.	100	22.1
2200	10	3.1
2200 2RS	10	3.1
2201	12	3.1
2201 2RS	12	3.1
2202	15	3.1
2202 2RS	15	3.1
2202.	15	22.1
2203	17	3.1
2203 2RS	17	3.1
2204	20	3.1
2204 2RS	20	3.1
2204 K	17	3.1
2204.	20	22.1
2205	25	3.1
2205 2RS	25	3.1
2205 K	20	3.1
2205 K2RS	20	3.1
2205.	25	22.1
2206	30	3.1
2206 2RS	30	3.1
2206 K	25	3.1
2206 K2RS	25	3.1
2206.	30	22.1
2207	35	3.1
2207 2RS	35	3.1
2207 K	30	3.1
2207 K2RS	30	3.1
2207.	35	22.1
2208	40	3.1
2208 2RS	40	3.1
2208 K	35	3.1
2208 K2RS	35	3.1
2208.	40	22.1
2209	45	3.1
2209 2RS	45	3.1
2209 K	40	3.1
2209 K2RS	40	3.1
2209.	45	22.1
221.	105	22.1
2210	50	3.1
2210 2RS	50	3.1
2210 K	45	3.1
2210 K2RS	45	3.1
2210.	50	22.1
2211	55	3.1
2211 2RS	55	3.1
2211 K	50	3.1
2211 K2RS	50	3.1
2211.	55	22.1
2212	60	3.1
2212 2RS	60	3.1

Index	d [mm]	Tab.No
2212 K	55	3.1
2212.	60	22.1
2213	65	3.1
2213 2RS	65	3.1
2213 K	60	3.1
2213.	65	22.1
2214	70	3.1
2214 2RS	70	3.1
2214 K	60	3.1
2214.	70	22.1
2215	75	3.1
2215 K	65	3.1
2215.	75	22.1
2216	80	3.1
2216 K	70	3.1
2216.	80	22.1
22168/22325	42,862	4.2
2217	85	3.1
2217 K	75	3.1
2217.	85	22.1
2218	90	3.1
2218 K	80	3.1
2218.	90	22.1
2219	95	3.1
2219 K	85	3.1
222.	110	22.1
2220	100	3.1
2220 K	90	3.1
2220.	100	22.1
22205 CW33	25	7.1
22205 KCW33	25	7.1
22206 CW33	30	7.1
22206 KCW33	30	7.1
22207 CW33	35	7.1
22207 KCW33	35	7.1
22208 CW33	40	7.1
22208 KCW33	40	7.1
22209 CW33	45	7.1
22209 KCW33	45	7.1
2221	105	3.1
2221 K	95	3.1
22210 CW33	50	7.1
22210 KCW33	50	7.1
22211 CW33	55	7.1
22211 KCW33	55	7.1
22212 CW33	60	7.1
22212 KCW33	60	7.1
22213 CW33	65	7.1
22213 KCW33	65	7.1
22214 CW33	70	7.1
22214 KCW33	70	7.1
22215 CW33	75	7.1
22215 KCW33	75	7.1
22216 CW33	80	7.1
22216 KCW33	80	7.1
22217 CW33	85	7.1
22217 KCW33	85	7.1
22218 CW33	90	7.1
22218 KCW33	90	7.1
22219 CW33	95	7.1
22219 KCW33	95	7.1
2222	110	3.1
2222 K	100	3.1
2222.	110	22.1
22220 CW33	100	7.1
22220 KCW33	100	7.1
22222 CW33	110	7.1
22222 KCW33	110	7.1
22224 CW33	120	7.1
22224 KCW33	120	7.1
22226 CW33	130	7.1
22226 KCW33	130	7.1
22228 CW33	140	7.1
22228 KCW33	140	7.1
22230 CW33	150	7.1
22230 KCW33	150	7.1
22232 CW33	160	7.1
22232 KCW33	160	7.1
22234 CW33	170	7.1
22234 KCW33	170	7.1
22236 CW33	180	7.1
22236 KCW33	180	7.1
22238 CW33	190	7.1
22238 KCW33	190	7.1
2224.	120	22.1
22240 CW33	200	7.1
22240 KCW33	200	7.1
22244 CW33	220	7.1
22244 KCW33	220	7.1
22248 CW33	240	7.1

https://nppnovoteh.com

23. INDEX

Index	d [mm]	Tab.No
22248 KCW33	240	7.1
22252 CW33	260	7.1
22252 KCW33	260	7.1
22256 CW33	280	7.1
22256 KCW33	280	7.1
2226.	130	22.1
22260 CW33	300	7.1
22260 KCW33	300	7.1
22264 CW33	320	7.1
22264 KCW33	320	7.1
22268 CW33	340	7.1
22268 KCW33	340	7.1
22272 CW33	360	7.1
22272 KCW33	360	7.1
2228.	140	22.1
2230.	150	22.1
22307 CW33	35	7.1
22307 KCW33	35	7.1
22308 CW33	40	7.1
22308 KCW33	40	7.1
22309 CW33	45	7.1
22309 KCW33	45	7.1
22310 CW33	50	7.1
22310 KCW33	50	7.1
22311 CW33	55	7.1
22311 KCW33	55	7.1
22312 CW33	60	7.1
22312 KCW33	60	7.1
22313 CW33	65	7.1
22313 KCW33	65	7.1
22314 CW33	70	7.1
22314 KCW33	70	7.1
22315 CW33	75	7.1
22315 KCW33	75	7.1
22316 CW33	80	7.1
22316 KCW33	80	7.1
22317 CW33	85	7.1
22317 KCW33	85	7.1
22318 CW33	90	7.1
22318 KCW33	90	7.1
22319 CW33	95	7.1
22319 KCW33	95	7.1
2232.	160	22.1
22320 CW33	100	7.1
22320 KCW33	100	7.1
22320.	100	22.1
22322 CW33	110	7.1
22322 KCW33	110	7.1
22324 CW33	120	7.1
22324 KCW33	120	7.1
22326 CW33	130	7.1
22326 KCW33	130	7.1
22328 CW33	140	7.1
22328 KCW33	140	7.1
22330 CW33	150	7.1
22330 KCW33	150	7.1
22332 CW33	160	7.1
22332 KCW33	160	7.1
22334 CW33	170	7.1
22334 KCW33	170	7.1
22336 CW33	180	7.1
22336 KCW33	180	7.1
22338 CW33	190	7.1
22338 KCW33	190	7.1
2234.	160	22.1
22340 CW33	200	7.1
22340 KCW33	200	7.1
22344 CW33	220	7.1
22344 KCW33	220	7.1
22348 CW33	240	7.1
22348 KCW33	240	7.1
22352 CW33	260	7.1
22352 KCW33	260	7.1
22356 CW33	280	7.1
22356 KCW33	280	7.1
2236.	180	22.1
22360 CW33	300	7.1
22360 KCW33	300	7.1
224.	120	22.1
226.	130	22.1
22780/22720	42,862	4.2
228.	140	22.1
23.	3	22.1
230.	150	22.1
230/1000 CW33	1000	7.1
230/1000 KCW33	1000	7.1
230/500 CW33	500	7.1
230/500 KCW33	500	7.1
230/530 CW33	530	7.1
230/530 KCW33	530	7.1
230/560 CW33	560	7.1
230/560 KCW33	560	7.1
230/600 CW33	600	7.1
230/600 KCW33	600	7.1
230/630 CW33	630	7.1
230/630 KCW33	630	7.1
230/670 CW33	670	7.1
230/670 KCW33	670	7.1
230/710 CW33	710	7.1
230/710 KCW33	710	7.1
230/750 CW33	750	7.1
230/750 KCW33	750	7.1
230/800 CW33	800	7.1
230/800 KCW33	800	7.1
230/850 CW33	850	7.1
230/850 KCW33	850	7.1
230/900 CW33	900	7.1
230/900 KCW33	900	7.1
230/950 CW33	950	7.1
230/950 KCW33	950	7.1
2300	10	3.1
2301	12	3.1
2302	15	3.1
2302 2RS	15	3.1
23022 CW33	110	7.1
23022 KCW33	110	7.1
23024 CW33	120	7.1
23024 KCW33	120	7.1
23026 CW33	130	7.1
23026 KCW33	130	7.1
23028 CW33	140	7.1
23028 KCW33	140	7.1
2303	17	3.1
2303 2RS	17	3.1
23030 CW33	150	7.1
23030 KCW33	150	7.1
23032 CW33	160	7.1
23032 KCW33	160	7.1
23034 CW33	170	7.1
23034 KCW33	170	7.1
23036 CW33	180	7.1
23036 KCW33	180	7.1
23038 CW33	190	7.1
23038 KCW33	190	7.1
2304	20	3.1
2304 2RS	20	3.1
2304 K	17	3.1
23040 CW33	200	7.1
23040 KCW33	200	7.1
23044 CW33	220	7.1
23044 KCW33	220	7.1
23048 CW33	240	7.1
23048 KCW33	240	7.1
2305	25	3.1
2305 2RS	25	3.1
2305 K	20	3.1
2305.	25	22.1
23052 CW33	260	7.1
23052 KCW33	260	7.1
23056 CW33	280	7.1
23056 KCW33	280	7.1
2306	30	3.1
2306 2RS	30	3.1
2306 K	25	3.1
2306.	30	22.1
23060 CW33	300	7.1
23060 KCW33	300	7.1
23064 CW33	320	7.1
23064 KCW33	320	7.1
23068 CW33	340	7.1
23068 KCW33	340	7.1
2307	35	3.1
2307 2RS	35	3.1
2307 K	30	3.1
2307.	35	22.1
23072 CW33	360	7.1
23072 KCW33	360	7.1
23076 CW33	380	7.1
23076 KCW33	380	7.1
2308	40	3.1
2308 2RS	40	3.1
2308 K	35	3.1
2308.	40	22.1
23080 CW33	400	7.1
23080 KCW33	400	7.1
23084 CW33	420	7.1
23084 KCW33	420	7.1
23088 CW33	440	7.1
23088 KCW33	440	7.1
2309	45	3.1
2309 2RS	45	3.1
2309 K	40	3.1
2309.	45	22.1
23092 CW33	460	7.1
23092 KCW33	460	7.1
23092/23256	23,812	4.2
23096 CW33	480	7.1
23096 KCW33	480	7.1
231/500 CW33	500	7.1
231/500 KCW33	500	7.1
231/530 CW33	530	7.1
231/530 KCW33	530	7.1
231/560 CW33	560	7.1
231/560 KCW33	560	7.1
231/600 CW33	600	7.1
231/600 KCW33	600	7.1
231/630 CW33	630	7.1
231/630 KCW33	630	7.1
231/670 CW33	670	7.1
231/670 KCW33	670	7.1
231/710 CW33	710	7.1
231/710 KCW33	710	7.1
231/750 CW33	750	7.1
231/750 KCW33	750	7.1
231/800 CW33	800	7.1
231/800 KCW33	800	7.1
231/850 CW33	850	7.1
231/850 KCW33	850	7.1
231/900 CW33	900	7.1
231/900 KCW33	900	7.1
2310	50	3.1
2310 2RS	50	3.1
2310 K	45	3.1
2310.	50	22.1
23100/23256	25,4	4.2
2311	55	3.1
2311 K	50	3.1
2311.	55	22.1
2312	60	3.1
2312 K	55	3.1
2312.	60	22.1
23120 CW33	100	7.1
23120 KCW33	100	7.1
23122 CW33	110	7.1
23122 KCW33	110	7.1
23124 CW33	120	7.1
23124 KCW33	120	7.1
23126 CW33	130	7.1
23126 KCW33	130	7.1
23128 CW33	140	7.1
23128 KCW33	140	7.1
2313	65	3.1
2313 K	60	3.1
2313.	65	22.1
23130 CW33	150	7.1
23130 KCW33	150	7.1
23132 CW33	160	7.1
23132 KCW33	160	7.1
23134 CW33	170	7.1
23134 KCW33	170	7.1
23136 CW33	180	7.1
23136 KCW33	180	7.1
23138 CW33	190	7.1
23138 KCW33	190	7.1
2314	70	3.1
2314 K	60	3.1
2314.	70	22.1
23140 CW33	200	7.1
23140 KCW33	200	7.1
23144 CW33	220	7.1
23144 KCW33	220	7.1
23148 CW33	240	7.1
23148 KCW33	240	7.1
2315	75	3.1
2315 K	65	3.1
2315.	75	22.1
23152 CW33	260	7.1
23152 KCW33	260	7.1
23156 CW33	280	7.1
23156 KCW33	280	7.1
2316	80	3.1
2316 K	70	3.1
2316.	80	22.1
23160 CW33	300	7.1
23160 KCW33	300	7.1
23164 CW33	320	7.1
23164 KCW33	320	7.1
23168 CW33	340	7.1
23168 KCW33	340	7.1
2317	85	3.1
2317 K	75	3.1
2317.	85	22.1
23172 CW33	360	7.1
23172 KCW33	360	7.1
23176 CW33	380	7.1
23176 KCW33	380	7.1
2318	90	3.1
2318 K	80	3.1
2318.	90	22.1
23180 CW33	400	7.1
23180 KCW33	400	7.1
23184 CW33	420	7.1
23184 KCW33	420	7.1
23188 CW33	440	7.1
23188 KCW33	440	7.1
2319	95	3.1
2319 K	85	3.1
2319.	95	22.1
23192 CW33	460	7.1
23192 KCW33	460	7.1
23196 CW33	480	7.1
23196 KCW33	480	7.1
232.	160	22.1
232/500 CW33	500	7.1
232/500 KCW33	500	7.1
232/530 CW33	530	7.1
232/530 KCW33	530	7.1
232/560 CW33	560	7.1
232/560 KCW33	560	7.1
232/600 CW33	600	7.1
232/600 KCW33	600	7.1
232/630 CW33	630	7.1
232/630 KCW33	630	7.1
2320	100	3.1
2320 K	90	3.1
2320.	100	22.1
2321	105	3.1
2321 K	95	3.1
232126.	130	22.1
23218 CW33	90	7.1
23218 KCW33	90	7.1
2322	110	3.1
2322 K	100	3.1
2322.	110	22.1
23220 CW33	100	7.1
23220 KCW33	100	7.1
23222 CW33	110	7.1
23222 KCW33	110	7.1
23224 CW33	120	7.1
23224 KCW33	120	7.1
23226 CW33	130	7.1
23226 KCW33	130	7.1
23228 CW33	140	7.1
23228 KCW33	140	7.1
23230 CW33	150	7.1
23230 KCW33	150	7.1
23232 CW33	160	7.1
23232 KCW33	160	7.1
23234 CW33	170	7.1
23234 KCW33	170	7.1
23236 CW33	180	7.1
23236 KCW33	180	7.1
23238 CW33	190	7.1
23238 KCW33	190	7.1
2324.	120	22.1
23240 CW33	200	7.1
23240 KCW33	200	7.1
23244 CW33	220	7.1
23244 KCW33	220	7.1
23248 CW33	240	7.1
23248 KCW33	240	7.1
23252 CW33	260	7.1
23252 KCW33	260	7.1
23256 CW33	280	7.1
23256 KCW33	280	7.1
2326.	130	22.1
23260 CW33	300	7.1
23260 KCW33	300	7.1
23264 CW33	320	7.1
23264 KCW33	320	7.1
23268 CW33	340	7.1
23268 KCW33	340	7.1
23272 CW33	360	7.1
23272 KCW33	360	7.1
23276 CW33	380	7.1
23276 KCW33	380	7.1
23280 CW33	400	7.1
23280 KCW33	400	7.1
232822.	110	22.1
23284 CW33	420	7.1
23284 KCW33	420	7.1
23288 CW33	440	7.1
23288 KCW33	440	7.1
23292 CW33	460	7.1
23292 KCW33	460	7.1
23296 CW33	480	7.1
23296 KCW33	480	7.1
23320 CW33	100	7.1
23322 CW33	110	7.1
23324 CW33	120	7.1
23326 CW33	130	7.1
23328 CW33	140	7.1
23330 CW33	150	7.1
23332 CW33	160	7.1
23338 CW33	190	7.1
23340 CW33	200	7.1
234.	170	22.1
234406 MSP	30	9.1
234407 MSP	35	9.1
234408 MSP	40	9.1
234409 MSP	45	9.1
234410 MSP	50	9.1
234411 MSP	55	9.1
234412 MSP	60	9.1
234413 MSP	65	9.1
234414 MSP	70	9.1
234415 MSP	75	9.1
234416 MSP	80	9.1
234417 MSP	85	9.1
234418 MSP	90	9.1
234419 MSP	95	9.1
234420 MSP	100	9.1
234421 MSP	105	9.1
234422 MSP	110	9.1
234424 MSP	120	9.1
234426 MSP	130	9.1
234428 MSP	140	9.1
234430 MSP	150	9.1
234432 MSP	160	9.1
234434 MSP	170	9.1
234436 MSP	180	9.1
234438 MSP	190	9.1
234440 MSP	200	9.1
234444 MSP	220	9.1
234448 MSP	240	9.1
234452 MSP	260	9.1
234456 MSP	280	9.1
234460 MSP	300	9.1
234464 MSP	320	9.1
234468 MSP	340	9.1
234472 MSP	360	9.1
234476 MSP	380	9.1
234480 MSP	400	9.1
234706 MSP	32	9.1
234707 MSP	37	9.1
234708 MSP	42	9.1
234709 MSP	47	9.1
234710 MSP	52	9.1
234711 MSP	57	9.1
234712 MSP	62	9.1
234713 MSP	67	9.1
234714 MSP	73	9.1
234715 MSP	78	9.1
234716 MSP	83	9.1
234717 MSP	88	9.1
234718 MSP	93	9.1
234719 MSP	98	9.1
234720 MSP	103	9.1
234721 MSP	109	9.1
234722 MSP	114	9.1
234724 MSP	124	9.1
234726 MSP	135	9.1
234728 MSP	145	9.1
234730 MSP	155	9.1
234732 MSP	165	9.1
234734 MSP	176	9.1
234736 MSP	187	9.1
234738 MSP	197	9.1
234740 MSP	207	9.1
234744 MSP	228	9.1
234748 MSP	248	9.1
234752 MSP	269	9.1
234756 MSP	289	9.1
234760 MSP	310	9.1
234764 MSP	330	9.1
234768 MSP	350	9.1
234772 MSP	370	9.1
234776 MSP	390	9.1
234780 MSP	410	9.1
23491/23420	31,75	4.2

https://nppnovoteh.com

Index	d [mm]	Tab.No
236.	180	22.1
236104.	20	22.1
236105.	25	22.1
236106.	30	22.1
236107.	35	22.1
236108.	40	22.1
236109.	45	22.1
236111.	55	22.1
236113.	65	22.1
236114.	70	22.1
236115.	75	22.1
236117.	85	22.1
236118.	90	22.1
236124.	120	22.1
236201.	12	22.1
236202.	15	22.1
236203.	17	22.1
236204.	20	22.1
236205.	25	22.1
236206.	30	22.1
236207.	35	22.1
236208.	40	22.1
236210.	50	22.1
236211.	55	22.1
236214.	70	22.1
236217.	85	22.1
236219.	95	22.1
23691/23620	35	4.2
238.	190	22.1
238/1000 CW33	1000	7.1
238/1060 CW33	1060	7.1
238/560 CW33	560	7.1
239/1000 CW33	1000	7.1
239/1000 KCW33	1000	7.1
239/1060 CW33	1060	7.1
239/1060 KCW33	1060	7.1
239/1120 CW33	1120	7.1
239/1120 KCW33	1120	7.1
239/1180 CW33	1180	7.1
239/1180 KCW33	1180	7.1
239/1250 CW33	1250	7.1
239/1250 KCW33	1250	7.1
239/500 CW33	500	7.1
239/500 KCW33	500	7.1
239/530 CW33	530	7.1
239/530 KCW33	530	7.1
239/560 CW33	560	7.1
239/560 KCW33	560	7.1
239/600 CW33	600	7.1
239/600 KCW33	600	7.1
239/630 CW33	630	7.1
239/630 KCW33	630	7.1
239/670 CW33	670	7.1
239/670 KCW33	670	7.1
239/710 CW33	710	7.1
239/710 KCW33	710	7.1
239/750 CW33	750	7.1
239/750 KCW33	750	7.1
239/800 CW33	800	7.1
239/800 KCW33	800	7.1
239/850 CW33	850	7.1
239/850 KCW33	850	7.1
239/900 CW33	900	7.1
239/900 KCW33	900	7.1
239/950 CW33	950	7.1
239/950 KCW33	950	7.1
23930 CW33	150	7.1
23930 KCW33	150	7.1
23932 CW33	160	7.1
23932 KCW33	160	7.1
23934 CW33	170	7.1
23934 KCW33	170	7.1
23936 CW33	180	7.1
23936 KCW33	180	7.1
23938 CW33	190	7.1
23938 KCW33	190	7.1
23940 CW33	200	7.1
23940 KCW33	200	7.1
23944 CW33	220	7.1
23944 KCW33	220	7.1
23948 CW33	240	7.1
23948 KCW33	240	7.1
23952 CW33	260	7.1
23952 KCW33	260	7.1
23956 CW33	280	7.1
23956 KCW33	280	7.1
23960 CW33	300	7.1
23960 KCW33	300	7.1
23964 CW33	320	7.1
23964 KCW33	320	7.1
23968 CW33	340	7.1
23968 KCW33	340	7.1
23972 CW33	360	7.1
23972 KCW33	360	7.1
23976 CW33	380	7.1
23976 KCW33	380	7.1
23980 CW33	400	7.1
23980 KCW33	400	7.1
23984 CW33	420	7.1
23984 KCW33	420	7.1
23988 CW33	440	7.1
23988 KCW33	440	7.1
23992 CW33	460	7.1
23992 KCW33	460	7.1
23996 CW33	480	7.1
23996 KCW33	480	7.1
24.	4	22.1
240/1000 CW33	1000	7.1
240/1000 K30CW33	1000	7.1
240/1060 CW33	1060	7.1
240/1060 K30CW33	1060	7.1
240/1120 CW33	1120	7.1
240/1120 K30CW33	1120	7.1
240/500 CW33	500	7.1
240/500 K30CW33	500	7.1
240/530 CW33	530	7.1
240/530 K30CW33	530	7.1
240/560 CW33	560	7.1
240/560 K30CW33	560	7.1
240/600 CW33	600	7.1
240/600 K30CW33	600	7.1
240/630 CW33	630	7.1
240/630 K30CW33	630	7.1
240/670 CW33	670	7.1
240/670 K30CW33	670	7.1
240/710 CW33	710	7.1
240/710 K30CW33	710	7.1
240/750 CW33	750	7.1
240/750 K30CW33	750	7.1
240/800 CW33	800	7.1
240/800 K30CW33	800	7.1
240/850 CW33	850	7.1
240/850 K30CW33	850	7.1
240/900 CW33	900	7.1
240/900 K30CW33	900	7.1
240/950 CW33	950	7.1
240/950 K30CW33	950	7.1
24024 CW33	120	7.1
24024 K30CW33	120	7.1
24026 CW33	130	7.1
24026 K30CW33	130	7.1
24028 CW33	140	7.1
24028 K30CW33	140	7.1
24030 CW33	150	7.1
24030 K30CW33	150	7.1
24032 CW33	160	7.1
24032 K30CW33	160	7.1
24034 CW33	170	7.1
24034 K30CW33	170	7.1
24036 CW33	180	7.1
24036 K30CW33	180	7.1
24038 CW33	190	7.1
24038 K30CW33	190	7.1
24040 CW33	200	7.1
24040 K30CW33	200	7.1
24044 CW33	220	7.1
24044 K30CW33	220	7.1
24048 CW33	240	7.1
24048 K30CW33	240	7.1
24052 CW33	260	7.1
24052 K30CW33	260	7.1
24056 CW33	280	7.1
24060 CW33	300	7.1
24060 K30CW33	300	7.1
24064 CW33	320	7.1
24064 K30CW33	320	7.1
24068 CW33	340	7.1
24068 K30CW33	340	7.1
24072 CW33	360	7.1
24072 K30CW33	360	7.1
24076 CW33	380	7.1
24076 K30CW33	380	7.1
24080 CW33	400	7.1
24080 K30CW33	400	7.1
24084 CW33	420	7.1
24084 K30CW33	420	7.1
24088 CW33	440	7.1
24088 K30CW33	440	7.1
2409.	45	22.1
24092 CW33	460	7.1
24092 K30CW33	460	7.1
24096 CW33	480	7.1
24096 K30CW33	480	7.1
241/500 CW33	500	7.1
241/500 K30CW33	500	7.1
241/530 CW33	530	7.1
241/530 K30CW33	530	7.1
241/560 CW33	560	7.1
241/560 K30CW33	560	7.1
241/600 CW33	600	7.1
241/600 K30CW33	600	7.1
241/630 CW33	630	7.1
241/630 K30CW33	630	7.1
241/670 CW33	670	7.1
241/670 K30CW33	670	7.1
241/710 CW33	710	7.1
241/710 K30CW33	710	7.1
2411.	55	22.1
24122 CW33	110	7.1
24122 K30CW33	110	7.1
24124 CW33	120	7.1
24124 K30CW33	120	7.1
24126 CW33	130	7.1
24126 K30CW33	130	7.1
24128 CW33	140	7.1
24128 K30CW33	140	7.1
2413.	65	22.1
24130 CW33	150	7.1
24130 K30CW33	150	7.1
24132 CW33	160	7.1
24132 K30CW33	160	7.1
24134 CW33	170	7.1
24134 K30CW33	170	7.1
24136 CW33	180	7.1
24136 K30CW33	180	7.1
24138 CW33	190	7.1
24138 K30CW33	190	7.1
24140 CW33	200	7.1
24140 K30CW33	200	7.1
24144 CW33	220	7.1
24144 K30CW33	220	7.1
24148 CW33	240	7.1
24148 K30CW33	240	7.1
24152 CW33	260	7.1
24152 K30CW33	260	7.1
24156 CW33	280	7.1
24156 K30CW33	280	7.1
2416.	80	22.1
24160 CW33	300	7.1
24160 K30CW33	300	7.1
24164 CW33	320	7.1
24164 K30CW33	320	7.1
24168 CW33	340	7.1
24168 K30CW33	340	7.1
24172 CW33	360	7.1
24172 K30CW33	360	7.1
24176 CW33	380	7.1
24176 K30CW33	380	7.1
24180 CW33	400	7.1
24180 K30CW33	400	7.1
24184 CW33	420	7.1
24184 K30CW33	420	7.1
24188 CW33	440	7.1
24188 K30CW33	440	7.1
24192 CW33	460	7.1
24192 K30CW33	460	7.1
24196 CW33	480	7.1
24196 K30CW33	480	7.1
244.	220	22.1
246108.	40	22.1
246109.	45	22.1
246110.	50	22.1
246111.	55	22.1
246111.	55	22.1
246112.	60	22.1
246112.	60	22.1
246113.	65	22.1
246116.	80	22.1
246117.	85	22.1
24612.	130	22.1
24612.	100	22.1
246120.	100	22.1
246126.	130	22.1
246204.	20	22.1
246207.	35	22.1
246213.	65	22.1
246222.	110	22.1
2474/2420	28,575	4.2
24780/24720	41,275	4.2
25.	5	22.1
2505.	25	22.1
2519.	95	22.1
2524.	120	22.1
254700.	14	22.1
254701.	16	22.1
254703.	20	22.1
254705.	25	22.1
254705.	30	22.1
254707.	40	22.1
254708.	45	22.1
254804.	26	22.1
254900.	15	22.1
254900.	20	22.1
254901.	17	22.1
254902.	20	22.1
254903.	22	22.1
254904.	25	22.1
254905.	30	22.1
254906.	35	22.1
254908.	50	22.1
254910.	60	22.1
2556.	280	22.1
25570/25520	36,512	4.2
25572/25520	38,1	4.2
25577/25520	42,875	4.2
25577/25522	42,875	4.2
25578/25520	42,862	4.2
2558/2523	30,163	4.2
25580/25520	44,45	4.2
25580/25522	44,45	4.2
25581/25520	44,45	4.2
25582/25520	44,45	4.2
25584/25520	44,983	4.2
25590/25519	45,618	4.2
25590/25520	45,618	4.2
25590/25521	45,618	4.2
25590/25522	45,618	4.2
25590/25523	45,618	4.2
25590/25526	45,618	4.2
25592/25520	46,038	4.2
256500.	10	22.1
256705.	25	22.1
256708.	42	22.1
256805.	25	22.1
2578/2523	28,575	4.2
2580/2520	31,75	4.2
2580/2523	31,75	4.2
2580/2523S	31,75	4.2
2581/2523	33,338	4.2
2582/2523	31,75	4.2
2585/2520	33,338	4.2
2585/2523	33,338	4.2
2585/2523S	33,338	4.2
25877/25820	34,925	4.2
25877/25821	34,925	4.2
25878/25821	34,925	4.2
25880/25821	36,487	4.2
26.	6	22.1
260605.	25	22.1
2609.	45	22.1
260902.	16	22.1
2611.	55	22.1
26112/26283	28,575	4.2
26112/26283S	28,575	4.2
2612.	60	22.1
26131/26283	33,338	4.2
2614.	70	22.1
2615.	75	22.1
2619.	95	22.1
26202.	15	22.1
26216.	80	22.1
2622.	110	22.1
2622134.	192	22.1
2626.	130	22.1
266130.	150	22.1
266132.	160	22.1
266134.	170	22.1
266140.	200	22.1
266144.	220	22.1
266148.	240	22.1
266152.	260	22.1
266156.	280	22.1
266206.	30	22.1
266210.	50	22.1
266318.	90	22.1
266340.	200	22.1
2682/2630	26,162	4.2
2682/2631	26,162	4.2
2684/2631	22,225	4.2
2687/2631	25,4	4.2
26877/26822	36,512	4.2
26878/26822	38,1	4.2
2688/2631	26,988	4.2
26880/26822	39,688	4.2
26881/26822	39,688	4.2
26882/26820	41,275	4.2
26882/26822	41,275	4.2
26882/26822A	41,275	4.2
26882/26823	41,275	4.2
26882/26824	41,275	4.2
26883/26822	35	4.2
26884/26822	42,875	4.2
26885/26822	41,275	4.2
26886/26822	42,875	4.2
2689/2631	28,575	4.2
2690/2631	29,367	4.2
27.	7	22.1
2712.	60	22.1
27306.	30	22.1
27307.	35	22.1
27308.	40	22.1
27309.	45	22.1
27310.	50	22.1
27311.	55	22.1
27312.	60	22.1
27313.	65	22.1
27315.	75	22.1
27317.	85	22.1
2732.	160	22.1
2740.	200	22.1
2746.	230	22.1
27518.	90	22.1
27606.	30	22.1
27607.	35	22.1
27608.	40	22.1
27613.	65	22.1
27616.	80	22.1
27687/27620	82,55	4.2
27689/27620	83,345	4.2
27690/27620	83,345	4.2
27691/27620	83,345	4.2
27695/27620	84,976	4.2
27705.	25	22.1
27706.	30	22.1
27709.	45	22.1
2776/2720	38,1	4.2
2777/2720	38,1	4.2
2780/2720	36,487	4.2
2785/2720	33,338	4.2
2786/2720	34,925	4.2
2788/2720	38,1	4.2
27880/27820	38,1	4.2
27881/27820	38,1	4.2
2788A/2720	38,1	4.2
2789/2720	39,688	4.2
2790/2720	33,338	4.2
27911.	53,975	22.1
2793/2720	34,925	4.2
2793/2729	34,925	4.2
2793/2735X	34,925	4.2
2794/2720	36,487	4.2
2796/2720	34,925	4.2
280017.	7	22.1
280114.	70	22.1
28137/28317	34,925	4.2
28150/28300	38,1	4.2
28150/28315	38,1	4.2
28158/28300	40	4.2
28579/28520	49,987	4.2
28579/28521	49,987	4.2
28580/28521	50,8	4.2
28580A/28521	50,8	4.2
28584/28521	52,388	4.2
28678/28622	50,8	4.2
28680/28622	55,562	4.2
286805.	25	22.1
28682/28622	57,15	4.2
2878/2820	34,925	4.2
2879/2820	31,75	4.2
28880/28820	247,65	4.2
28985/28919	60,325	4.2
28985/28920	60,325	4.2
28985/28921	60,325	4.2
28990/28920	61,912	4.2
28995/28920	62,738	4.2
29.	9	22.1
292/1060 M	1060	12.1
292/500 M	500	12.1
292/530 M	530	12.1
292/560 M	560	12.1

https://nppnovoteh.com

23. INDEX

Index	d [mm]	Tab.No
292/600 M	600	12.1
292/630 M	630	12.1
292/710 M	710	12.1
292116.	91,5	22.1
292152.	290	22.1
292202.	20	22.1
292203.	22,9	22.1
292204.	27	22.1
292205.	32	22.1
292206.	38,5	22.1
292207.	43,8	22.1
292208.	50	22.1
292211.	66,5	22.1
292212.	73,5	22.1
292213.	79,6	22.1
292215.	88,5	22.1
292216.	95,3	22.1
292218.	107	22.1
292306.	42	22.1
292308.	53,5	22.1
292310.	65	22.1
29240 M	200	12.1
29244 M	220	12.1
29248 M	240	12.1
29252 M	260	12.1
29256 M	280	12.1
29260 M	300	12.1
292617.	108	22.1
29264 M	320	12.1
29268 M	340	12.1
29272 M	360	12.1
29276 M	380	12.1
29280 M	400	12.1
29284 M	420	12.1
29288 M	440	12.1
29292 M	460	12.1
29296 M	480	12.1
293/500 M	500	12.1
293/530 M	530	12.1
293/560 M	560	12.1
293/600 M	600	12.1
293/630 M	630	12.1
29317 M	85	12.1
29318 M	90	12.1
29320 M	100	12.1
29322 M	110	12.1
29324 M	120	12.1
29326 M	130	12.1
29328 M	140	12.1
29330 M	150	12.1
29332 M	160	12.1
29334 M	170	12.1
29336 M	180	12.1
29338 M	190	12.1
29340 M	200	12.1
29344 M	220	12.1
29348 M	240	12.1
29352 M	260	12.1
29360 M	300	12.1
29364 M	320	12.1
29368 M	340	12.1
29372 M	360	12.1
29376 M	380	12.1
29380 M	400	12.1
29384 M	420	12.1
29388 M	440	12.1
29392 M	460	12.1
29396 M	480	12.1
294/500 M	500	12.1
294/600 M	600	12.1
294/630 M	630	12.1
294/670 M	670	12.1
294/710 M	710	12.1
294/800 M	800	12.1
29412 M	60	12.1
29413 M	65	12.1
29414 M	70	12.1
29415 M	75	12.1
29416 M	80	12.1
29417 M	85	12.1
29418 M	90	12.1
29420 M	100	12.1
29422 M	110	12.1
29424 M	120	12.1
29426 M	130	12.1
29428 M	140	12.1
29430 M	150	12.1
29432 M	160	12.1
29434 M	170	12.1
29436 M	180	12.1
29438 M	190	12.1
29440 M	200	12.1
29444 M	220	12.1
29448 M	240	12.1
29452 M	260	12.1
29456 M	280	12.1
29464 M	320	12.1
29468 M	340	12.1
29472 M	360	12.1
29476 M	380	12.1
29488 M	440	12.1
29492 M	460	12.1
29496 M	480	12.1
29580/29520	60	4.2
29582/29520	60	4.2
29585/29520	63,5	4.2
29585/29521	63,5	4.2
29585/29522	63,5	4.2
29586/29520	63,5	4.2
29590/29520	66,675	4.2
29675/29620	69,85	4.2
29675/29630	69,85	4.2
29680/29620	70,637	4.2
29685/29620	73,025	4.2
29688/29620	73,817	4.2
297308.	40	22.1
2984/2924	46,038	4.2
29875/29820	254	4.2
29880/29820	266,7	4.2
29903.	16	22.1
29908.	38,4	22.1
30/5 2RS	5	2.4
30/5 ZZ	5	2.4
30/6 2RS	6	2.4
30/6 ZZ	6	2.4
30/7 2RS	7	2.4
30/7 ZZ	7	2.4
30/8 2RS	8	2.4
30/8 ZZ	8	2.4
300.	10	22.1
3000 2RS	10	2.4
3000 ZZ	10	2.4
3001 2RS	12	2.4
3001 ZZ	12	2.4
3002 2RS	15	2.4
3002 ZZ	15	2.4
30029/950.	950	22.1
3003 2RS	17	2.4
3003 ZZ	17	2.4
30031/530.	530	22.1
30031/560.	560	22.1
3003124.	120	22.1
3003128.	140	22.1
3003130.	150	22.1
3003132.	160	22.1
3003136.	180	22.1
3003140.	200	22.1
3003144.	220	22.1
3003148.	240	22.1
3003156.	280	22.1
3003160.	300	22.1
3003164.	320	22.1
3003168.	340	22.1
3003172.	360	22.1
3003180.	400	22.1
3003188.	440	22.1
3003192.	460	22.1
3003196.	480	22.1
3003220.	100	22.1
30037/500.	500	22.1
30037/600.	600	22.1
3003732.	160	22.1
3003744.	220	22.1
3003748.	240	22.1
3003752.	260	22.1
3003756.	280	22.1
3004 2RS	20	2.4
3004 ZZ	20	2.4
3005 2RS	25	2.4
3005 ZZ	25	2.4
3006 2RS	30	2.4
3006 ZZ	30	2.4
3007 2RS	35	2.4
3007 ZZ	35	2.4
3007114.	70	22.1
3007117.	85	22.1
3007205.	25	22.1
3007210.	50	22.1
3007212.	60	22.1
3007215.	75	22.1
3007722.	110	22.1
3008 2RS	40	2.4
3008 ZZ	40	2.4
301.	12	22.1
3013125.	125	22.1
3013140.	200	22.1
3013152.	260	22.1
3013156.	280	22.1
3013738.	190	22.1
3013748.	240	22.1
302.	15	22.1
302/22 A	22	4.1
302/28 A	28	4.1
302/32 A	32	4.1
30202 A	15	4.1
30203 A	17	4.1
30204 A	20	4.1
30205 A	25	4.1
30206 A	30	4.1
30207 A	35	4.1
30208 A	40	4.1
30209 A	45	4.1
30210 A	50	4.1
30211 A	55	4.1
30212 A	60	4.1
30213 A	65	4.1
30214 A	70	4.1
30215 A	75	4.1
30216 A	80	4.1
30217 A	85	4.1
30218 A	90	4.1
30219 A	95	4.1
30220 A	100	4.1
30221 A	105	4.1
30222 A	110	4.1
30224 A	120	4.1
30226 A	130	4.1
30228 A	140	4.1
30230 A	150	4.1
30232 A	160	4.1
30234 A	170	4.1
30236 A	180	4.1
30238 A	190	4.1
30240 A	200	4.1
30244 A	220	4.1
30248 A	240	4.1
30252 A	260	4.1
30256 A	280	4.1
30260 A	300	4.1
30264 A	320	4.1
303.	17	22.1
303/22 A	22	4.1
303/28 A	28	4.1
303/32 A	32	4.1
30302 A	15	4.1
30303 A	17	4.1
30304 A	20	4.1
30305 A	25	4.1
30306 A	30	4.1
30307 A	35	4.1
30308 A	40	4.1
30309 A	45	4.1
30310 A	50	4.1
30311 A	55	4.1
30312 A	60	4.1
30313 A	65	4.1
30314 A	70	4.1
30315 A	75	4.1
30316 A	80	4.1
30317 A	85	4.1
30318 A	90	4.1
30319 A	95	4.1
30320 A	100	4.1
3032180.	400	22.1
30322 A	110	4.1
30324 A	120	4.1
30326 A	130	4.1
30328 A	140	4.1
30330 A	150	4.1
30332 A	160	4.1
30334 A	170	4.1
30336 A	180	4.1
30338 A	190	4.1
30340 A	200	4.1
30344 A	220	4.1
304.	20	22.1
305.	25	22.1
305332.	110	22.1
3056203.	17	22.1
3056204.	20	22.1
3056205.	25	22.1
3056206.	30	22.1
3056207.	35	22.1
3056208.	40	22.1
3056209.	45	22.1
3056210.	50	22.1
3056211.	55	22.1
3056212.	30	22.1
3056213.	65	22.1
3056214.	70	22.1
3056215.	75	22.1
3056216.	80	22.1
3056217.	85	22.1
3056218.	90	22.1
3056219.	95	22.1
3056220.	100	22.1
3056221.	105	22.1
3056222.	110	22.1
3056305.	25	22.1
3056306.	30	22.1
3056309.	45	22.1
3056310.	50	22.1
306.	30	22.1
307.	35	22.1
3073740.	220	22.1
307752.	260	22.1
30777/530.	530	22.1
307986.	431,8	22.1
308.	40	22.1
308109.	45	22.1
3086304.	20	22.1
3086309.	45	22.1
3086313.	65	22.1
309.	45	22.1
310.	50	22.1
311.	55	22.1
3113140.	200	22.1
3113148.	240	22.1
3113164.	320	22.1
3113172.	360	22.1
3113188.	440	22.1
31132/530.	530	22.1
3113776.	380	22.1
3113780.	400	22.1
3113792.	460	22.1
312.	60	22.1
313.	65	22.1
31305 A	25	4.1
31306 A	30	4.1
31307 A	35	4.1
31308 A	40	4.1
31309 A	45	4.1
31310 A	50	4.1
31311 A	55	4.1
31312 A	60	4.1
31313 A	65	4.1
31314 A	70	4.1
31315 A	75	4.1
31316 A	80	4.1
31317 A	85	4.1
31318 A	90	4.1
31319 A	95	4.1
31320 A	100	4.1
31321 A	105	4.1
31322 A	110	4.1
31324 A	120	4.1
31326 A	130	4.1
31328 A	140	4.1
31330 A	150	4.1
314.	70	22.1
315.	75	22.1
3156211.	55	22.1
3156307.	35	22.1
3156896.	480	22.1
31590/31520	33,338	4.2
31593/31520	34,925	4.2
31594/31520	34,925	4.2
31594/31521	34,925	4.2
31597/31520	36,512	4.2
316.	80	22.1
3160202.	15	22.1
317.	85	22.1
318.	90	22.1
3180018.	8	22.1
3180202.	15	22.1
3180209.	45	22.1
31821/500.	500	22.1
3182106.	30	22.1
3182107.	35	22.1
3182108.	40	22.1
3182109.	45	22.1
3182110.	50	22.1
3182111.	55	22.1
3182112.	60	22.1
3182113.	65	22.1
3182114.	70	22.1
3182115.	75	22.1
3182116.	80	22.1
3182117.	85	22.1
3182118.	90	22.1
3182119.	95	22.1
3182120.	100	22.1
3182121.	105	22.1
3182122.	110	22.1
3182124.	120	22.1
3182126.	130	22.1
3182128.	140	22.1
3182130.	150	22.1
3182132.	160	22.1
3182134.	170	22.1
3182136.	180	22.1
3182140.	200	22.1
3182144.	220	22.1
3182148.	240	22.1
3182156.	280	22.1
3182164.	320	22.1
3182168.	340	22.1
3182172.	360	22.1
3182192.	460	22.1
3187/3120	30,162	4.2
3188/3120	31,75	4.2
3188S/3120	31,75	4.2
3189/3120	25,4	4.2
3192/3120	28,575	4.2
3193/3120	31,75	4.2
3196/3120	33,338	4.2
3198/3120	28,575	4.2
3198/3130	28,575	4.2
320.	100	22.1
320/22 AX	22	4.1
320/28 AX	28	4.1
320/32 AX	32	4.1
3200	10	2.4
3200 2RS	10	2.4
3200 ZZ	10	2.4
32004 AX	20	4.1
32005 AX	25	4.1
32006 AX	30	4.1
32007 AX	35	4.1
32008 AX	40	4.1
32009 AX	45	4.1
3201	12	2.4
3201 2RS	12	2.4
3201 ZZ	12	2.4
32010 AX	50	4.1
32011 AX	55	4.1
32012 AX	60	4.1
32013 AX	65	4.1
32014 AX	70	4.1
32015 AX	75	4.1
32016 AX	80	4.1
32017 AX	85	4.1
32018 AX	90	4.1
32019 AX	95	4.1
3202	15	2.4
3202 2RS	15	2.4
3202 ZZ	15	2.4
32020 AX	100	4.1
32021 AX	105	4.1
32022 AX	110	4.1
32024 AX	120	4.1
32026 AX	130	4.1
32028 AX	140	4.1
3203	17	2.4
3203 2RS	17	2.4
3203 ZZ	17	2.4
32030 AX	150	4.1
32032 AX	160	4.1
32034 AX	170	4.1
32036 AX	180	4.1
32038 AX	190	4.1
3204	20	2.4
3204 2RS	20	2.4
3204 ZZ	20	2.4
32040 AX	200	4.1
32044 AX	220	4.1
32048 AX	240	4.1
3205	25	2.4
3205 2RS	25	2.4
3205 ZZ	25	2.4

https://nppnovoteh.com

Index	d [mm]	Tab.No
32052 AX	260	4.1
32056 AX	280	4.1
3206	30	2.4
3206 2RS	30	2.4
3206 ZZ	30	2.4
32060 AX	300	4.1
32064 AX	320	4.1
3207	35	2.4
3207 2RS	35	2.4
3207 ZZ	35	2.4
3208	40	2.4
3208 2RS	40	2.4
3208 ZZ	40	2.4
3209	45	2.4
3209 2RS	45	2.4
3209 ZZ	45	2.4
321.	105	22.1
3210	50	2.4
3210 2RS	50	2.4
3210 ZZ	50	2.4
32106.	30	22.1
32107.	35	22.1
32108.	40	22.1
32109.	45	22.1
3211	55	2.4
3211 2RS	55	2.4
3211 ZZ	55	2.4
32110.	50	22.1
32111.	55	22.1
32113.	65	22.1
32114.	70	22.1
32115.	75	22.1
32116.	80	22.1
32117.	85	22.1
32118.	90	22.1
32119.	95	22.1
3212	60	2.4
3212 2RS	60	2.4
3212 ZZ	60	2.4
32120.	100	22.1
32121.	105	22.1
32122.	110	22.1
32124.	120	22.1
32126.	130	22.1
32128.	140	22.1
3213	65	2.4
3213 2RS	65	2.4
3213 ZZ	65	2.4
32132.	160	22.1
32134.	160	22.1
32136.	180	22.1
3214	70	2.4
3214 2RS	70	2.4
3214 ZZ	70	2.4
32140.	200	22.1
32144.	220	22.1
3215	75	2.4
3215 2RS	75	2.4
3215 ZZ	75	2.4
32152.	260	22.1
3216	80	2.4
3216 2RS	80	2.4
3216 ZZ	80	2.4
32160.	150	22.1
32160.	300	22.1
3217	85	2.4
3217 2RS	85	2.4
3217 ZZ	85	2.4
3218	90	2.4
3218 2RS	90	2.4
3218 ZZ	90	2.4
3219	95	2.4
32192.	460	22.1
322.	110	22.1
322/22 A	22	4.1
322/28 A	28	4.1
322/32 A	32	4.1
3220	100	2.4
3220 2RS	100	2.4
3220 ZZ	100	2.4
32202.	15	22.1
32203 A	17	4.1
32203.	17	22.1
32204 A	20	4.1
32204.	20	22.1
32205 A	25	4.1
32205.	25	22.1
32206 A	30	4.1
32206.	30	22.1
32207 A	35	4.1
32207.	35	22.1
32208 A	40	4.1
32208.	40	22.1
32209 A	45	4.1
32209.	45	22.1
32210 A	50	4.1
32210.	50	22.1
32211 A	55	4.1
32211.	55	22.1
32212 A	60	4.1
32212.	60	22.1
32213 A	65	4.1
32213.	65	22.1
32214 A	70	4.1
32214.	70	22.1
32215 A	75	4.1
32215.	75	22.1
32216 A	80	4.1
32216.	80	22.1
32217 A	85	4.1
32218 A	90	4.1
32218.	90	22.1
32219 A	95	4.1
32219.	95	22.1
3222	110	2.4
32220 A	100	4.1
32220.	100	22.1
32221 A	105	4.1
32221.	105	22.1
32221/560.	560	22.1
32222 A	110	4.1
32222.	110	22.1
322220.	100	22.1
32224 A	120	4.1
32224.	120	22.1
32226 A	130	4.1
32226.	130	22.1
32228 A	140	4.1
32228.	140	22.1
32230 A	150	4.1
32230.	150	22.1
32232 A	160	4.1
32232.	160	22.1
32234 A	170	4.1
32234.	160	22.1
32236 A	180	4.1
32238 A	190	4.1
32240.	200	22.1
32244 A	220	4.1
32244.	220	22.1
32248 A	240	4.1
32248.	240	22.1
32252 A	260	4.1
32256 A	280	4.1
323/22 A	22	4.1
323/28 A	28	4.1
323/32 A	32	4.1
32302.	15	22.1
32303 A	17	4.1
32304 A	20	4.1
32305 A	25	4.1
32305.	25	22.1
32306 A	30	4.1
32306.	30	22.1
32307 A	35	4.1
32307.	35	22.1
32308 A	40	4.1
32308.	40	22.1
32309 A	45	4.1
32309.	45	22.1
32310 A	50	4.1
32310.	50	22.1
32311 A	55	4.1
32311.	55	22.1
32312 A	60	4.1
32312.	60	22.1
32313 A	65	4.1
32313.	65	22.1
32314 A	70	4.1
32314.	70	22.1
32315 A	75	4.1
32315.	75	22.1
32316 A	80	4.1
32316.	80	22.1
32317 A	85	4.1
32317.	85	22.1
32318 A	90	4.1
32318.	90	22.1
32319 A	95	4.1
32319.	95	22.1
32320 A	100	4.1
32320.	100	22.1
32321 A	105	4.1
32321.	105	22.1
32322 A	110	4.1
32322.	110	22.1
32324 A	120	4.1
32324.	120	22.1
32326 A	130	4.1
32326.	130	22.1
32328 A	140	4.1
32328.	140	22.1
32330 A	150	4.1
32330.	150	22.1
32332 A	160	4.1
32332.	160	22.1
32334 A	170	4.1
32334.	160	22.1
32336 A	180	4.1
32336.	180	22.1
32338 A	190	4.1
32340 A	200	4.1
32340.	200	22.1
324.	120	22.1
32409.	45	22.1
32410.	50	22.1
32412.	60	22.1
32413.	65	22.1
32414.	70	22.1
32416.	80	22.1
32417.	85	22.1
32418.	90	22.1
32419.	95	22.1
32421.	105	22.1
32422.	110	22.1
32424.	120	22.1
32426.	130	22.1
32505.	25	22.1
32506.	30	22.1
32507.	35	22.1
32508.	40	22.1
32509.	45	22.1
32510.	50	22.1
32511.	55	22.1
32512.	60	22.1
32513.	65	22.1
32514.	70	22.1
32515.	75	22.1
32516.	80	22.1
32517.	85	22.1
32518.	90	22.1
32519.	95	22.1
32520.	100	22.1
32524.	120	22.1
32532.	160	22.1
3254106.	40	22.1
3254108.	50	22.1
32544.	220	22.1
326.	130	22.1
32605.	25	22.1
32607.	35	22.1
32608.	40	22.1
32609.	45	22.1
32610.	50	22.1
32611.	55	22.1
32612.	60	22.1
32613.	65	22.1
32615.	75	22.1
32616.	80	22.1
32617.	85	22.1
32619.	95	22.1
32622.	110	22.1
32624.	120	22.1
32626.	130	22.1
32630.	150	22.1
32634.	160	22.1
32725.	125	22.1
32726.	130	22.1
32731.	155	22.1
3282109.	45	22.1
3282111.	55	22.1
3282112.	60	22.1
3282114.	70	22.1
3282115.	75	22.1
3282116.	80	22.1
3282117.	85	22.1
3282120.	100	22.1
3282124.	120	22.1
3282128.	140	22.1
3282130.	150	22.1
3282134.	170	22.1
3282140.	200	22.1
3282156.	280	22.1
3282168.	340	22.1
3286208.	40	22.1
3286308.	40	22.1
3286312.	60	22.1
3286844.	220	22.1
3286848.	240	22.1
32907 A	35	4.1
32908 A	40	4.1
32909 A	45	4.1
32910 A	50	4.1
32911 A	55	4.1
32912 A	60	4.1
32913 A	65	4.1
32914 A	70	4.1
32915 A	75	4.1
32916 A	80	4.1
32916.	82	22.1
32917 A	85	4.1
32918 A	90	4.1
32919 A	95	4.1
32920 A	100	4.1
32921 A	105	4.1
32922 A	110	4.1
32924 A	120	4.1
32926 A	130	4.1
32928 A	140	4.1
32930 A	150	4.1
32932 A	160	4.1
32934 A	170	4.1
32936 A	180	4.1
32938 A	190	4.1
32940 A	200	4.1
32944 A	220	4.1
32948 A	240	4.1
32952 A	260	4.1
32956 A	280	4.1
32960 A	300	4.1
32964 A	320	4.1
32968 A	340	4.1
32972 A	360	4.1
330.	150	22.1
33005 A	25	4.1
33006 A	30	4.1
33007 A	35	4.1
33008 A	40	4.1
33009 A	45	4.1
33010 A	50	4.1
33011 A	55	4.1
33012 A	60	4.1
33013 A	65	4.1
33014 A	70	4.1
33015 A	75	4.1
33016 A	80	4.1
33017 A	85	4.1
33018 A	90	4.1
33019 A	95	4.1
3302	15	2.4
3302 2RS	15	2.4
3302 ZZ	15	2.4
33020 A	100	4.1
33021 A	105	4.1
33022 A	110	4.1
33024 A	120	4.1
33026 A	130	4.1
33028 A	140	4.1
3303	17	2.4
3303 2RS	17	2.4
3303 ZZ	17	2.4
33030 A	150	4.1
3304	20	2.4
3304 2RS	20	2.4
3304 ZZ	20	2.4
3305	25	2.4
3305 2RS	25	2.4
3305 ZZ	25	2.4
3306	30	2.4
3306 2RS	30	2.4
3306 ZZ	30	2.4
330602.	16	22.1
3307	35	2.4
3307 2RS	35	2.4
3307 ZZ	35	2.4
3308	40	2.4
3308 2RS	40	2.4
3308 ZZ	40	2.4
330802.	16	22.1
3309	45	2.4
3309 2RS	45	2.4
3309 ZZ	45	2.4
330902.	16	22.1
3310	50	2.4
3310 2RS	50	2.4
3310 ZZ	50	2.4
33108 A	40	4.1
33109 A	45	4.1
3311	55	2.4
3311 2RS	55	2.4
3311 ZZ	55	2.4
33110 A	50	4.1
33111 A	55	4.1
33112 A	60	4.1
33113 A	65	4.1
33114 A	70	4.1
33115 A	75	4.1
33116 A	80	4.1
33117 A	85	4.1
33118 A	90	4.1
33119 A	95	4.1
3312	60	2.4
3312 2RS	60	2.4
3312 ZZ	60	2.4
33120 A	100	4.1
33121 A	105	4.1
33122 A	110	4.1
33124 A	120	4.1
3313	65	2.4
3313 2RS	65	2.4
3313 ZZ	65	2.4
3314	70	2.4
3314 2RS	70	2.4
3314 ZZ	70	2.4
3315	75	2.4
3315 2RS	75	2.4
3315 ZZ	75	2.4
3316	80	2.4
3316 2RS	80	2.4
3316 ZZ	80	2.4
3317	85	2.4
3318	90	2.4
3318 2RS	90	2.4
3319	95	2.4
332/28 A	28	4.1
332/32 A	32	4.1
3320	100	2.4
3320 2RS	100	2.4
33205 A	25	4.1
33206 A	30	4.1
33207 A	35	4.1
33208 A	40	4.1
33209 A	45	4.1
33210 A	50	4.1
33211 A	55	4.1
33212 A	60	4.1
33213 A	65	4.1
33214 A	70	4.1
33215 A	75	4.1
33216 A	80	4.1
33217 A	85	4.1
33218 A	90	4.1
33219 A	95	4.1
3322	110	2.4
33220 A	100	4.1
33221 A	105	4.1
33225/33462	57,15	4.2
33269/33462	68,262	4.2
33275/33462	69,85	4.2
33281/33462	71,438	4.2
33287/33462	73,025	4.2
33287/33472	73,025	4.2
3353123.	115	22.1
3353134.	170	22.1
3353730.	150	22.1
3353732.	160	22.1
3353734.	170	22.1
3353736.	180	22.1
336/332	41,275	4.2
336104.	20	22.1
336106.	30	22.1
336122.	110	22.1
336317.	85	22.1
336320.	100	22.1
3379/3320	34,925	4.2
3381/3320	38,1	4.2
3382/3320	39,688	4.2
3382/3321	39,688	4.2
3382/3328	39,688	4.2
3382/3331	39,688	4.2

https://nppnovoteh.com

23. INDEX

Index	d [mm]	Tab.No
3382/3339	39,688	4.2
3386/3320	39,688	4.2
33880/33821	38,1	4.2
33885/33821	44,45	4.2
33885/33822	44,45	4.2
33889/33821	50,8	4.2
33890/33821	52,388	4.2
33891/33821	52,388	4.2
33895/33821	53,975	4.2
33895/33822	53,975	4.2
339/332	35	4.2
34.	4	22.1
342/332	41,275	4.2
34274/34478	69,952	4.2
34274/34492A	69,952	4.2
342S/332	42,875	4.2
34300/34478	76,2	4.2
34301/34478	76,2	4.2
34306/34478	77,788	4.2
34307/34478	77,788	4.2
344/332	40	4.2
344A/332	40	4.2
346205.	25	22.1
346206.	30	22.1
346209.	45	22.1
346234.	170	22.1
346308.	40	22.1
346310.	50	22.1
346312.	60	22.1
346313.	65	22.1
346317.	85	22.1
346320.	100	22.1
346330.	150	22.1
3476/3420	31,75	4.2
3478/3420	34,925	4.2
3479/3420	36,512	4.2
3490/3420	38,1	4.2
35.	5	22.1
3508.	40	22.1
3509.	45	22.1
350A/354A	40	4.2
35176/35326	44,45	4.2
3528K.	140	22.1
3530.	150	22.1
3532.	160	22.1
3534.	170	22.1
353514.	70	22.1
353516.	80	22.1
353522.	110	22.1
353523.	115	22.1
3536.	180	22.1
353613.	65	22.1
353614.	70	22.1
353618.	90	22.1
3538.	190	22.1
3540.	200	22.1
3544.	220	22.1
355/354A	44,45	4.2
3552.	260	22.1
3556.	280	22.1
355A/354A	44,45	4.2
3564.	320	22.1
3572.	360	22.1
3576/3525	41,275	4.2
3577/3525	41,275	4.2
3578/3520	44,45	4.2
3578/3525	44,45	4.2
3578/3526	44,45	4.2
3579/3525	42,862	4.2
358/354A	45	4.2
3580.	400	22.1
3580/3525	38,1	4.2
3585/3525	41,275	4.2
3586/3525	45,237	4.2
359A/354A	46,038	4.2
359S/352	46,038	4.2
359S/354A	46,038	4.2
3609.	45	22.1
36100.	10	22.1
36101.	12	22.1
36102.	15	22.1
36103.	17	22.1
36104.	20	22.1
36105.	25	22.1
36106.	30	22.1
36107.	35	22.1
36108.	40	22.1
36109.	45	22.1
36110.	50	22.1
36111.	55	22.1
36112.	60	22.1
36113.	65	22.1
36114.	70	22.1
36115.	75	22.1
36116.	80	22.1
36117.	85	22.1
36118.	90	22.1
36120.	100	22.1
36121.	105	22.1
36137/36300	34,925	4.2
36201.	12	22.1
36202.	15	22.1
36203.	17	22.1
36204.	20	22.1
36205.	25	22.1
36206.	30	22.1
36207.	35	22.1
36208.	40	22.1
36209.	45	22.1
36210.	50	22.1
36212.	60	22.1
36214.	70	22.1
36216.	80	22.1
36217.	85	22.1
36218.	90	22.1
36219.	95	22.1
36220.	100	22.1
3624.	120	22.1
3626K.	130	22.1
3628K.	140	22.1
3630.	150	22.1
36300.	10	22.1
36302.	15	22.1
36303.	17	22.1
36308.	40	22.1
36318.	90	22.1
3632.	160	22.1
3634.	170	22.1
3636.	180	22.1
3638.	190	22.1
3640.	200	22.1
3644.	220	22.1
365/362A	50	4.2
3652.	260	22.1
3656.	280	22.1
3659/3620	23,812	4.2
365A/362A	41,275	4.2
365S/362A	49,212	4.2
366/362A	50	4.2
366156.	280	22.1
366203.	17	22.1
366210.	50	22.1
366222.	110	22.1
366318.	90	22.1
366326.	130	22.1
366340.	200	22.1
366408.	40	22.1
366412.	60	22.1
36690/36620	146,05	4.2
36691/36620	146,05	4.2
367/362A	45	4.2
368/362	50,8	4.2
3680.	400	22.1
368A/362	50,8	4.2
368A/362A	50,8	4.2
368A/363	50,8	4.2
368S/362A	51,592	4.2
36990/36920	177,8	4.2
369A/362A	47,625	4.2
369S/362A	47,625	4.2
370A/362A	50,8	4.2
3738.	190	22.1
37425/37625	107,95	4.2
37431/37625	109,538	4.2
37431A/37625	109,538	4.2
3744.	220	22.1
375/374	50,8	4.2
3753234.	170	22.1
3753732.	160	22.1
3753734.	170	22.1
3753736.	180	22.1
3756.	280	22.1
3756205.	25	22.1
3756206.	30	22.1
376.	340	22.1
3760.	300	22.1
3767/3720	52,388	4.2
3775/3720	50,8	4.2
3776/3720	44,983	4.2
3777/3720	46,038	4.2
3778/3720	47,625	4.2
3779/3720	47,625	4.2
3780/3720	50,8	4.2
3780/3726	50,8	4.2
3780/3730	50,8	4.2
3780/3732	50,8	4.2
3781/3720	49,212	4.2
3782/3720	44,45	4.2
3784/3720	50,8	4.2
3800 2RS	10	2.4
3800 ZZ	10	2.4
3801 2RS	12	2.4
3801 ZZ	12	2.4
3802 2RS	15	2.4
3802 ZZ	15	2.4
3803 2RS	17	2.4
3803 ZZ	17	2.4
3804 2RS	20	2.4
3804 ZZ	20	2.4
3805 2RS	25	2.4
3805 ZZ	25	2.4
3806 2RS	30	2.4
3806 ZZ	30	2.4
3807 2RS	35	2.4
3807 ZZ	35	2.4
380707.	35	22.1
3808 2RS	40	2.4
3808 ZZ	40	2.4
3809 2RS	45	2.4
3809 ZZ	45	2.4
3810 2RS	50	2.4
3810 ZZ	50	2.4
3811 2RS	55	2.4
3811 ZZ	55	2.4
3812 2RS	60	2.4
3812 ZZ	60	2.4
3814 2RS	70	2.4
3814 ZZ	70	2.4
3816 2RS	80	2.4
3816 ZZ	80	2.4
3818 2RS	90	2.4
3818 ZZ	90	2.4
3820 2RS	100	2.4
38204.	20	22.1
38205.	25	22.1
38206.	30	22.1
38207.	35	22.1
38208.	40	22.1
38209.	45	22.1
38210.	50	22.1
38211.	55	22.1
38212.	60	22.1
38214.	70	22.1
38216.	80	22.1
38217.	85	22.1
38224.	120	22.1
38236.	180	22.1
38316.	80	22.1
3844.	220	22.1
385/382A	55	4.2
385A/382A	50,8	4.2
385AX/382A	50,8	4.2
385X/382A	55	4.2
386A/382A	47,625	4.2
387/382	57,15	4.2
3872/3820	34,925	4.2
3875/3820	38,1	4.2
3876/3820	38,1	4.2
3877/3820	41,275	4.2
3877/3821	41,275	4.2
3878/3820	36,512	4.2
3879/3820	40	4.2
387A/382	57,15	4.2
387A/382A	57,15	4.2
387A/382S	57,15	4.2
387A/383A	57,15	4.2
387AS/382A	57,15	4.2
387S/382A	57,15	4.2
3880/3820	41,275	4.2
38880/38820	263,525	4.2
38885/38820	266,7	4.2
388A/382A	57,531	4.2
389/382A	55,575	4.2
389A/382A	53,975	4.2
390/394A	57,15	4.2
3903 2RS	17	2.4
3903 ZZ	17	2.4
3904 2RS	20	2.4
3904 ZZ	20	2.4
390A/394A	63,5	4.2
390A/394AS	63,5	4.2
392/394A	61,912	4.2
39236/39412	59,987	4.2
39250/39412	63,5	4.2
395/394A	63,5	4.2
39573/39520	50,8	4.2
39575/39520	50,8	4.2
39578/39520	53,975	4.2
39580/39520	57,15	4.2
39581/39520	57,15	4.2
39585/39520	63,5	4.2
39585A/39520	63,5	4.2
39586/39520	64,988	4.2
39590/39520	66,675	4.2
39590/39521	66,675	4.2
39591/39520	66,675	4.2
395A/394A	66,675	4.2
395S/394A	66,675	4.2
396/394A	50	4.2
397/394A	60	4.2
3975/3920	50,8	4.2
3977/3920	60	4.2
3979/3920	57,15	4.2
398/394A	50,8	4.2
3980/3920	60,325	4.2
3982/3920	63,5	4.2
3984/3920	66,675	4.2
3984/3925	66,675	4.2
3984/3926	66,675	4.2
3994/3920	66,675	4.2
399A/394A	68,262	4.2
399AS/394A	68,262	4.2
402310.	50	22.1
402311.	55	22.1
402312.	60	22.1
402318.	90	22.1
4024103.	24	22.1
4024104.	28	22.1
4024105.	34	22.1
4024106.	40	22.1
4024107.	46	22.1
4024108.	52	22.1
4024109.	58	22.1
4024110.	62	22.1
4024111.	70	22.1
4024112.	75	22.1
4024113.	80	22.1
4024114.	80	22.1
4024115.	92	22.1
4024116.	100	22.1
4024903.	22	22.1
4024905.	30	22.1
4024918.	105	22.1
4024919.	110	22.1
4024920.	115	22.1
4024922.	125	22.1
4024924.	140	22.1
4024926.	150	22.1
4024928.	160	22.1
4024932.	185	22.1
402715.	75	22.1
403.	17	22.1
404.	20	22.1
405.	25	22.1
406.	30	22.1
407.	35	22.1
4074103.	17	22.1
4074104.	20	22.1
4074105.	22	22.1
4074106.	30	22.1
4074107.	35	22.1
4074108.	40	22.1
4074109.	45	22.1
4074110.	50	22.1
4074111.	55	22.1
4074112.	60	22.1
4074113.	65	22.1
4074114.	70	22.1
4074115.	75	22.1
4074116.	80	22.1
4074117.	85	22.1
4074904.	20	22.1
4074905.	22	22.1
4074907.	35	22.1
4074912.	60	22.1
4074913.	65	22.1
4074915.	75	22.1
4074916.	80	22.1
4074917.	85	22.1
4074918.	90	22.1
4074919.	95	22.1
4074920.	100	22.1
4074922.	110	22.1
4074924.	120	22.1
4074926.	130	22.1
4074928.	140	22.1
4074930.	150	22.1
408.	40	22.1
4084104.	28,7	22.1
4084106.	40,1	22.1
4084107.	45,9	22.1
4084110.	62,1	22.1
409.	45	22.1
410.	50	22.1
411.	55	22.1
41125/41286	28,575	4.2
41126/41286	28,575	4.2
412.	60	22.1
413.	65	22.1
414.	70	22.1
416.	80	22.1
4162920.	100	22.1
4162938.	190	22.1
417.	85	22.1
418/414	38,1	4.2
419/414	41,275	4.2
420/414	40	4.2
4200	10	1.6
4200 2RS	10	1.6
4201	12	1.6
4201 2RS	12	1.6
4202	15	1.6
4202 2RS	15	1.6
4202192.	460	22.1
4203	17	1.6
4203 2RS	17	1.6
4204	20	1.6
4204 2RS	20	1.6
4205	25	1.6
4205 2RS	25	1.6
4206	30	1.6
4206 2RS	30	1.6
4207	35	1.6
4207 2RS	35	1.6
4208	40	1.6
4208 2RS	40	1.6
4209	45	1.6
4209 2RS	45	1.6
4210	50	1.6
4210 2RS	50	1.6
4211	55	1.6
4212	60	1.6
4213	65	1.6
42130.	150	22.1
4214	70	1.6
42144.	220	22.1
4215	75	1.6
42152.	260	22.1
4216	80	1.6
4217	85	1.6
4218	90	1.6
4220	100	1.6
42202.	15	22.1
42203.	17	22.1
42204.	20	22.1
42205.	25	22.1
42205.	25	22.1
42206.	30	22.1
42207.	35	22.1
42208.	40	22.1
42209.	45	22.1
42210.	50	22.1
42211.	55	22.1
42212.	60	22.1
42213.	65	22.1
42215.	75	22.1
42216.	80	22.1
42217.	85	22.1
42218.	90	22.1
42219.	95	22.1
42221.	105	22.1
42222.	110	22.1
42224.	120	22.1
42226.	130	22.1
42228.	140	22.1
42230.	150	22.1
42232.	160	22.1
42234.	160	22.1
42236.	180	22.1
42240.	200	22.1

Index	d [mm]	Tab.No
42244.	220	22.1
42305.	25	22.1
42306.	30	22.1
42307.	35	22.1
42308.	40	22.1
42309.	45	22.1
42310.	50	22.1
42311.	55	22.1
42312.	60	22.1
42313.	65	22.1
42314.	70	22.1
42315.	75	22.1
42316.	80	22.1
42317.	85	22.1
42318.	90	22.1
42319.	95	22.1
42320.	100	22.1
42322.	110	22.1
42324.	120	22.1
42326.	130	22.1
42328.	140	22.1
42330.	150	22.1
42336.	180	22.1
42346/42584	87,96	4.2
42350/42584	88,9	4.2
42368/42584	93,662	4.2
42373/42584	94,975	4.2
42375/42584	95,25	4.2
42381/42584	96,838	4.2
42409.	45	22.1
42410.	50	22.1
42411.	55	22.1
42412.	60	22.1
42413.	65	22.1
42415.	75	22.1
42417.	85	22.1
42420.	100	22.1
42422.	110	22.1
42426.	130	22.1
42428.	140	22.1
4244901.	12	22.1
4244903.	17	22.1
4244905.	22	22.1
4244906.	30	22.1
4244909.	45	22.1
4244910.	50	22.1
4244911.	55	22.1
4244914.	70	22.1
42504.	20	22.1
42506.	30	22.1
42507.	35	22.1
42511.	55	22.1
42516.	80	22.1
42520.	100	22.1
42524.	120	22.1
42526.	130	22.1
42532.	160	22.1
42536.	180	22.1
4254706.	35	22.1
4254714.	75	22.1
4254901.	16	22.1
4254902.	20	22.1
4254903.	22	22.1
4254904.	25	22.1
4254905.	30	22.1
4254906.	35	22.1
4254909.	50	22.1
4254909.	52	22.1
42606.	30	22.1
42607.	35	22.1
42612.	60	22.1
42613.	65	22.1
42614.	70	22.1
42615.	75	22.1
42616.	80	22.1
42618.	90	22.1
42620.	100	22.1
4262188.	440	22.1
42622.	110	22.1
42624.	120	22.1
42626.	130	22.1
42629/530.	530	22.1
42629/710.	710	22.1
42630.	150	22.1
42687/42620	76,2	4.2
42688/42620	76,2	4.2
42690/42620	77,788	4.2
42726.	130	22.1
42728.	140	22.1
42822.	110	22.1

Index	d [mm]	Tab.No
4302	15	1.6
4302 2RS	15	1.6
4303	17	1.6
4303 2RS	17	1.6
4304	20	1.6
4304 2RS	20	1.6
4305	25	1.6
4305 2RS	25	1.6
4306	30	1.6
4306 2RS	30	1.6
4307	35	1.6
4307 2RS	35	1.6
4308	40	1.6
4308 2RS	40	1.6
4309	45	1.6
4309 2RS	45	1.6
4310	50	1.6
4310 2RS	50	1.6
4311	55	1.6
43112/43312	28,575	4.2
4312	60	1.6
43125/43312	31,75	4.2
4313	65	1.6
43131/43312	33,338	4.2
43132/43312	33,338	4.2
4314	70	1.6
4315	75	1.6
436/432	46,038	4.2
436101.	12	22.1
436105.	25	22.1
436106.	30	22.1
436107.	35	22.1
436110.	50	22.1
436111.	55	22.1
436112.	60	22.1
436113.	65	22.1
436114.	70	22.1
436116.	80	22.1
436117.	85	22.1
436118.	90	22.1
436126.	130	22.1
436201.	12	22.1
436203.	17	22.1
436204.	20	22.1
436205.	25	22.1
436206.	30	22.1
436207.	35	22.1
436208.	40	22.1
436209.	45	22.1
436210.	50	22.1
436211.	55	22.1
436212.	60	22.1
436213.	65	22.1
436214.	70	22.1
436215.	75	22.1
4375/4335	38,1	4.2
438/432	44,45	4.2
438/432A	44,45	4.2
4388/4335	41,275	4.2
4395/4335	42,07	4.2
440/432	38,1	4.2
44131/44348	33,338	4.2
44143/44348	36,512	4.2
44150/44348	38,1	4.2
44158/44348	39,688	4.2
44162/44348	41,275	4.2
4427/500.	500	22.1
442860.	300	22.1
446202.	15	22.1
446206.	30	22.1
446207.	35	22.1
446208.	40	22.1
446209.	45	22.1
446210.	50	22.1
446211.	55	22.1
446212.	60	22.1
446213.	65	22.1
446215.	75	22.1
446216.	80	22.1
446220.	100	22.1
446305.	25	22.1
446306.	30	22.1
446307.	35	22.1
446308.	40	22.1
446311.	55	22.1
446312.	60	22.1
446318.	90	22.1
446330.	150	22.1
449/432	34,925	4.2
45.	4,5	22.1

Index	d [mm]	Tab.No
45280/45220	44,45	4.2
45282/45220	47,625	4.2
45284/45220	50,8	4.2
45285A/45220	50,8	4.2
45287/45220	53,975	4.2
45289/45220	57,15	4.2
45290/45220	57,15	4.2
45291/45220	57,15	4.2
45291/45221	57,15	4.2
45485/45220	50,8	4.2
455/453X	50,8	4.2
455S/453X	50,8	4.2
456/453X	53,975	4.2
4580/4535	50,8	4.2
4595/4535	53,975	4.2
460/453X	44,45	4.2
460706.	30	22.1
46106.	30	22.1
46107.	35	22.1
46108.	40	22.1
46109.	45	22.1
46110.	50	22.1
46111.	55	22.1
46112.	60	22.1
46113.	65	22.1
46114.	70	22.1
46115.	75	22.1
46116.	80	22.1
46117.	85	22.1
46118.	90	22.1
46120.	100	22.1
46121.	105	22.1
46122.	110	22.1
46162/46368	41,275	4.2
46175/46368	44,45	4.2
46176/46368	44,45	4.2
462/453X	57,15	4.2
46202.	15	22.1
46203.	17	22.1
46204.	20	22.1
46205.	25	22.1
46206.	30	22.1
46207.	35	22.1
46208.	40	22.1
46209.	45	22.1
46210.	50	22.1
46211.	55	22.1
46212.	60	22.1
46213.	65	22.1
46215.	75	22.1
46216.	80	22.1
46217.	85	22.1
46218.	90	22.1
46220.	100	22.1
46222.	110	22.1
462222.	110	22.1
463/453X	47,625	4.2
46303.	17	22.1
46304.	20	22.1
46305.	25	22.1
46306.	30	22.1
46307.	35	22.1
46308.	40	22.1
46309.	45	22.1
46310.	50	22.1
46311.	55	22.1
46312.	60	22.1
46313.	65	22.1
46314.	70	22.1
46316.	80	22.1
46318.	90	22.1
46320.	100	22.1
464068.	8	22.1
46416.	80	22.1
46418.	90	22.1
464701.	12	22.1
464702.	15	22.1
464703.	17	22.1
464704.	20	22.1
464705.	25	22.1
464706.	30	22.1
464707.	35	22.1
464708.	8	22.1
464708.	40	22.1
464904.	19,3	22.1
464905.	24	22.1
464906.	32	22.1
464907.	37	22.1
466/453X	54,988	4.2
466130.	150	22.1

Index	d [mm]	Tab.No
466203.	17	22.1
466230.	150	22.1
466305.	25	22.1
466307.	35	22.1
466309.	45	22.1
466311.	55	22.1
466315.	75	22.1
466322.	110	22.1
466330.	150	22.1
466409.	45	22.1
466412.	60	22.1
466432.	160	22.1
467/453X	47,625	4.2
46780/46720	158,75	4.2
46790/46720	165,1	4.2
46792/46720	166,687	4.2
468/453X	52,388	4.2
469/453A	57,15	4.2
469/453X	57,15	4.2
469/454	57,15	4.2
47487/47420	69,85	4.2
47487/47420A	69,85	4.2
47490/47420	71,438	4.2
475/472	55	4.2
4753740.	200	22.1
476/472	60	4.2
47678/47620	76,2	4.2
47679/47620	76,2	4.2
47680/47620	76,2	4.2
47681/47620	80,962	4.2
47686/47620	82,55	4.2
47686/47620A	82,55	4.2
47687/47620	82,55	4.2
477/472	63,5	4.2
477752.	260	22.1
477756.	280	22.1
477780.	400	22.1
47890/47820	92,075	4.2
47896/47820	95,25	4.2
480/472	68,262	4.2
480206.	30	22.1
48190/48120	107,95	4.2
482/472	69,85	4.2
482/472A	69,85	4.2
48286/48220	123,825	4.2
48290/48220	127	4.2
483/472	63,5	4.2
48324.	160	22.1
48385/48320	133,35	4.2
48393/48320	136,525	4.2
484/472	70	4.2
48479/750.	750	22.1
48506/48750	128,588	4.2
48684/48620	142,875	4.2
48685/48620	142,875	4.2
49175/49368	44,45	4.2
495/492A	82,55	4.2
495/493	82,55	4.2
49576/49520	44,45	4.2
49585/49520	50,8	4.2
495A/492A	76,2	4.2
495A/493A	76,2	4.2
495AS/493	77,788	4.2
495AX/493	76,2	4.2
495S/493	71,438	4.2
496/493	80,962	4.2
497/492A	85,725	4.2
497/493	85,725	4.2
49742.	210/212	22.1
49768.	340	22.1
497A/492A	85,725	4.2
497A/493	85,725	4.2
498/493	84,138	4.2
50104.	20	22.1
50105.	20	22.1
50106.	30	22.1
50107.	35	22.1
50108.	40	22.1
50115.	75	22.1
50202.	15	22.1
50203.	17	22.1
50204.	20	22.1
50205.	25	22.1
50206.	30	22.1
50207.	35	22.1
50208.	40	22.1
50209.	45	22.1
50210.	50	22.1
50211.	55	22.1
502111.	55	22.1

Index	d [mm]	Tab.No
50212.	60	22.1
50213.	65	22.1
50216.	80	22.1
50217.	85	22.1
50218.	90	22.1
502207.	35	22.1
502208.	40	22.1
502212.	60	22.1
502220.	100	22.1
502308.	40	22.1
502309.	45	22.1
502310.	50	22.1
50300.	10	22.1
50303.	17	22.1
50304.	20	22.1
50305.	25	22.1
50306.	30	22.1
50307.	35	22.1
50308.	40	22.1
50309.	45	22.1
50310.	50	22.1
50311.	55	22.1
50312.	60	22.1
50313.	65	22.1
50314.	70	22.1
50315.	75	22.1
50316.	80	22.1
50406.	30	22.1
50407.	35	22.1
50408.	40	22.1
50409.	45	22.1
50410.	50	22.1
50411.	55	22.1
50412.	60	22.1
50414.	70	22.1
50416.	80	22.1
504704.	20	22.1
504705.	25	22.1
504706.	30	22.1
504707.	35	22.1
504708.	40	22.1
504709.	45	22.1
504710.	50	22.1
504905.	25	22.1
504906.	30	22.1
504907.	35	22.1
504909.	45	22.1
504910.	50	22.1
504911.	55	22.1
504912.	60	22.1
504914.	70	22.1
50705.	25	22.1
50706.	30	22.1
511/500	500	8.1
511/530	530	8.1
511/560	560	8.1
511/600	600	8.1
51100	10	8.1
51101	12	8.1
51102	15	8.1
51103	17	8.1
51104	20	8.1
51105	25	8.1
51106	30	8.1
51107	35	8.1
51108	40	8.1
51109	45	8.1
51110	50	8.1
51111	55	8.1
51112	60	8.1
51113	65	8.1
51114	70	8.1
51115	75	8.1
51116	80	8.1
51117	85	8.1
51118	90	8.1
51120	100	8.1
51122	110	8.1
51124	120	8.1
51126	130	8.1
51128	140	8.1
51130	150	8.1
51132	160	8.1
51134	170	8.1
51136	180	8.1
51138	190	8.1
51140	200	8.1
51144	220	8.1
51148	240	8.1
51152	260	8.1

https://nppnovoteh.com

23. INDEX

Index	d [mm]	Tab.No
51156	280	8.1
51160	300	8.1
51164	320	8.1
51168	340	8.1
51172	360	8.1
51176	380	8.1
51180	400	8.1
51184	420	8.1
51188	440	8.1
51192	460	8.1
51196	480	8.1
51200	10	8.1
51201	12	8.1
51202	15	8.1
51203	17	8.1
51204	20	8.1
51205	25	8.1
51206	30	8.1
51207	35	8.1
51208	40	8.1
51209	45	8.1
51210	50	8.1
51211	55	8.1
51212	60	8.1
51213	65	8.1
51214	70	8.1
51215	75	8.1
51216	80	8.1
51217	85	8.1
51218	90	8.1
51220	100	8.1
51222	110	8.1
51224	120	8.1
51226	130	8.1
51228	140	8.1
51230	150	8.1
51232	160	8.1
51234	170	8.1
51236	180	8.1
51238	190	8.1
51240	200	8.1
51244	220	8.1
51248	240	8.1
51252	260	8.1
51256	280	8.1
51260	300	8.1
51264	320	8.1
51268	340	8.1
51272	360	8.1
51276	380	8.1
51280	400	8.1
51284	420	8.1
51288	440	8.1
51292	460	8.1
51305	25	8.1
51306	30	8.1
51307	35	8.1
51308	40	8.1
51309	45	8.1
51310	50	8.1
51311	55	8.1
51312	60	8.1
51313	65	8.1
51314	70	8.1
51315	75	8.1
51316	80	8.1
51317	85	8.1
51318	90	8.1
51320	100	8.1
51322	110	8.1
51324	120	8.1
51326	130	8.1
51328	140	8.1
51330	150	8.1
51332	160	8.1
51334	170	8.1
51336	180	8.1
51338	190	8.1
51340	200	8.1
51405	25	8.1
51406	30	8.1
51407	35	8.1
51408	40	8.1
51409	45	8.1
51410	50	8.1
51411	55	8.1
51412	60	8.1
51413	65	8.1
51414	70	8.1
51415	75	8.1
51416	80	8.1
51417	85	8.1
51418	90	8.1
51420	100	8.1
51422	110	8.1
51424	120	8.1
51426	130	8.1
51428	140	8.1
51430	150	8.1
51432	160	8.1
51434	170	8.1
51436	180	8.1
520110.	50	22.1
520118.	90	22.1
520806.	30	22.1
520907.	37	22.1
52202	10	8.2
52204	15	8.2
52205	20	8.2
52206	25	8.2
52207	30	8.2
52208	30	8.2
52209	35	8.2
52210	40	8.2
52211	45	8.2
52212	50	8.2
52214	55	8.2
52215	60	8.2
52216	65	8.2
52217	70	8.2
52218	75	8.2
52220	85	8.2
52222	95	8.2
52224	100	8.2
52226	110	8.2
52226.	130	22.1
52228	120	8.2
52228.	140	22.1
52230	130	8.2
52232	140	8.2
52234	150	8.2
52236	150	8.2
52238	160	8.2
52240	170	8.2
52244	190	8.2
52305	20	8.2
52306	25	8.2
52307	30	8.2
52308	30	8.2
52309	35	8.2
52309.	45	22.1
52310	40	8.2
52311	45	8.2
52312	50	8.2
52313	55	8.2
52314	55	8.2
52315	60	8.2
52316	65	8.2
52317	70	8.2
52318	75	8.2
52320	85	8.2
52320.	100	22.1
52322	95	8.2
52324	100	8.2
52326	110	8.2
52328	120	8.2
52328.	140	22.1
52330	130	8.2
52332	140	8.2
52332.	160	22.1
52334	150	8.2
52336	150	8.2
52338	160	8.2
52340	170	8.2
52375/52618	95,25	4.2
52387/52618	98,425	4.2
52393/52618	100,012	4.2
52400/52618	101,6	4.2
52400/52637	101,6	4.2
52400/52638	101,6	4.2
52401/52618	101,6	4.2
52405	15	8.2
52406	20	8.2
52407	25	8.2
52408	30	8.2
52409	35	8.2
52410	40	8.2
52411	45	8.2
52412	50	8.2
52413	50	8.2
52414	55	8.2
52416	65	8.2
52418	70	8.2
52420	80	8.2
52422	90	8.2
52424	95	8.2
52426	100	8.2
52428	110	8.2
52430	120	8.2
52432	130	8.2
52434	135	8.2
52436	140	8.2
525/522	38,1	4.2
52536.	180	22.1
5254704.	25	22.1
5254705.	29	22.1
5254706.	32	22.1
5254706.	35	22.1
5254708.	40	22.1
5254710.	50	22.1
5254804.	24	22.1
5254900.	14	22.1
5254905.	30	22.1
52618.	90	22.1
52624.	120	22.1
52626.	130	22.1
52630.	150	22.1
527/522	44,45	4.2
52732.	160	22.1
528/522	47,625	4.2
529/522	50,8	4.2
529X/522	50,8	4.2
530206.	30	22.1
530209.	45	22.1
530211.	55	22.1
53150/53375	38,1	4.2
53162/53375	41,275	4.2
53176/53375	44,45	4.2
53176/53377	44,45	4.2
53176/53387	44,45	4.2
53177/53375	44,45	4.2
53178/53375	44,45	4.2
53200	10	8.1
53200 U	10	8.1
53201	12	8.1
53201 U	12	8.1
53202	15	8.1
53202 U	15	8.1
53203	17	8.1
53203 U	17	8.1
53204	20	8.1
53204 U	20	8.1
53205	25	8.1
53205 U	25	8.1
53206	30	8.1
53206 U	30	8.1
53207	35	8.1
53207 U	35	8.1
53208	40	8.1
53208 U	40	8.1
53209	45	8.1
53209 U	45	8.1
53210	50	8.1
53210 U	50	8.1
53211	55	8.1
53211 U	55	8.1
53212	60	8.1
53212 U	60	8.1
53213	65	8.1
53213 U	65	8.1
53214	70	8.1
53214 U	70	8.1
53215	75	8.1
53215 U	75	8.1
53216	80	8.1
53216 U	80	8.1
53217	85	8.1
53217 U	85	8.1
53218	90	8.1
53218 U	90	8.1
53220	100	8.1
53220 U	100	8.1
53222	110	8.1
53222 U	110	8.1
53224	120	8.1
53224 U	120	8.1
53226	130	8.1
53226 U	130	8.1
53228	140	8.1
53228 U	140	8.1
53230	150	8.1
53230 U	150	8.1
53232	160	8.1
53232 U	160	8.1
53234	170	8.1
53234 U	170	8.1
53236	180	8.1
53236 U	180	8.1
53238	190	8.1
53238 U	190	8.1
53240	200	8.1
53240 U	200	8.1
53244	220	8.1
53244 U	220	8.1
53248	240	8.1
53248 U	240	8.1
53252	260	8.1
53252 U	260	8.1
53260	300	8.1
53260 U	300	8.1
53264	320	8.1
53264 U	320	8.1
53268	340	8.1
53268 U	340	8.1
53272	360	8.1
53272 U	360	8.1
53305	25	8.1
53305 U	25	8.1
53306	30	8.1
53306 U	30	8.1
53307	35	8.1
53307 U	35	8.1
53308	40	8.1
53308 U	40	8.1
53309	45	8.1
53309 U	45	8.1
53310	50	8.1
53310 U	50	8.1
53311	55	8.1
53311 U	55	8.1
53312	60	8.1
53312 U	60	8.1
53313	65	8.1
53313 U	65	8.1
53314	70	8.1
53314 U	70	8.1
53315	75	8.1
53315 U	75	8.1
53316	80	8.1
53316 U	80	8.1
53317	85	8.1
53317 U	85	8.1
53318	90	8.1
53318 U	90	8.1
53320	100	8.1
53320 U	100	8.1
53322	110	8.1
53322 U	110	8.1
53324	120	8.1
53324 U	120	8.1
53326	130	8.1
53326 U	130	8.1
53328	140	8.1
53328 U	140	8.1
53330	150	8.1
53330 U	150	8.1
53332	160	8.1
53332 U	160	8.1
53334	170	8.1
53334 U	170	8.1
53336	180	8.1
53336 U	180	8.1
53338	190	8.1
53338 U	190	8.1
53340	200	8.1
53340 U	200	8.1
53405	25	8.1
53405 U	25	8.1
53406	30	8.1
53406 U	30	8.1
53407	35	8.1
53407 U	35	8.1
53408	40	8.1
53408 U	40	8.1
53409	45	8.1
53409 U	45	8.1
53410	50	8.1
53410 U	50	8.1
53411	55	8.1
53411 U	55	8.1
53412	60	8.1
53412 U	60	8.1
53413	65	8.1
53413 U	65	8.1
53414	70	8.1
53414 U	70	8.1
53415	75	8.1
53415 U	75	8.1
53416	80	8.1
53416 U	80	8.1
53417	85	8.1
53417 U	85	8.1
53418	90	8.1
53418 U	90	8.1
53420	100	8.1
53420 U	100	8.1
535/532A	44,45	4.2
535/532X	44,45	4.2
53516.	80	22.1
53518.	90	22.1
53519.	95	22.1
53520.	100	22.1
53522.	110	22.1
53524.	120	22.1
53526.	130	22.1
5356/5335	44,45	4.2
53608.	40	22.1
53610.	50	22.1
53611.	55	22.1
53612.	60	22.1
53614.	70	22.1
53615.	75	22.1
53616.	80	22.1
53618.	90	22.1
53619.	95	22.1
53620.	100	22.1
537/532A	50,8	4.2
537/532X	50,8	4.2
539/532A	53,975	4.2
539/532X	53,975	4.2
5395/5335	49,212	4.2
539A/532X	53,975	4.2
54202	10	8.2
54202 U	10	8.2
54204	15	8.2
54204 U	15	8.2
54205	20	8.2
54205 U	20	8.2
54206	25	8.2
54206 U	25	8.2
54207	30	8.2
54207 U	30	8.2
54208	30	8.2
54208 U	30	8.2
54209	35	8.2
54209 U	35	8.2
54210	40	8.2
54210 U	40	8.2
54211	45	8.2
54211 U	45	8.2
54212	50	8.2
54212 U	50	8.2
54213	55	8.2
54213 U	55	8.2
54214	55	8.2
54214 U	55	8.2
54215	60	8.2
54215 U	60	8.2
54216	65	8.2
54216 U	65	8.2
54217	70	8.2
54217 U	70	8.2
54218	75	8.2
54218 U	75	8.2
54220	85	8.2
54220 U	85	8.2
54222	95	8.2
54222 U	95	8.2
54224	100	8.2
54224 U	100	8.2
54226	110	8.2
54226 U	110	8.2
54228	120	8.2
54228 U	120	8.2
54230	130	8.2
54230 U	130	8.2
54232	140	8.2
54232 U	140	8.2
54234	150	8.2
54234 U	150	8.2

https://nppnovoteh.com

Index	d [mm]	Tab.No
54236	150	8.2
54236 U	150	8.2
54238	160	8.2
54238 U	160	8.2
54240	170	8.2
54240 U	170	8.2
54244	190	8.2
54244 U	190	8.2
543/532X	40	4.2
54305	20	8.2
54305 U	20	8.2
54306	25	8.2
54306 U	25	8.2
54307	30	8.2
54307 U	30	8.2
54308	30	8.2
54308 U	30	8.2
543085/543114	215,9	4.2
54309	35	8.2
54309 U	35	8.2
54310	40	8.2
54310 U	40	8.2
54311	45	8.2
54311 U	45	8.2
54312	50	8.2
54312 U	50	8.2
54313	55	8.2
54313 U	55	8.2
54314	55	8.2
54314 U	55	8.2
54315	60	8.2
54315 U	60	8.2
54316	65	8.2
54316 U	65	8.2
54317	70	8.2
54317 U	70	8.2
54318	75	8.2
54318 U	75	8.2
54320	85	8.2
54320 U	85	8.2
54322	95	8.2
54322 U	95	8.2
54324	100	8.2
54324 U	100	8.2
54405	15	8.2
54405 U	15	8.2
54406	20	8.2
54406 U	20	8.2
54407	25	8.2
54407 U	25	8.2
54408	30	8.2
54408 U	30	8.2
54409	35	8.2
54409 U	35	8.2
544090/544118	228,6	4.2
544091/544118	231,775	4.2
54410	40	8.2
54410 U	40	8.2
54411	45	8.2
54411 U	45	8.2
54412	50	8.2
54412 U	50	8.2
54413	50	8.2
54413 U	50	8.2
54414	55	8.2
54414 U	55	8.2
54415	60	8.2
54415 U	60	8.2
54416	65	8.2
54416 U	65	8.2
54417	65	8.2
54417 U	65	8.2
54418	70	8.2
54418 U	70	8.2
54420	80	8.2
54420 U	80	8.2
544203.	17	22.1
544207.	35	22.1
545112/545141	285,75	4.2
54707.	35	22.1
54708.	40	22.1
54712.	60	22.1
54808.	40	22.1
54810.	50	22.1
54822.	110	22.1
550703.	17	22.1
55175C/55437	44,45	4.2
55176C/55437	44,45	4.2
55187C/55437	47,625	4.2
55187C/55443	47,625	4.2

Index	d [mm]	Tab.No
55200C/55437	50,8	4.2
55200C/55443	50,8	4.2
55206C/55437	52,388	4.2
55212C/55434	53,975	4.2
555/552A	50,8	4.2
555S/552A	57,15	4.2
5578/5535	53,975	4.2
557S/552A	53,975	4.2
558/552A	60,325	4.2
5583/5535	60,325	4.2
5584/5535	63,5	4.2
559/552A	63,5	4.2
5595/5535	65,883	4.2
560/552A	66,675	4.2
560S/552A	68,262	4.2
56418/56650	106,362	4.2
56425/56650	107,95	4.2
56425/56662	107,95	4.2
56426/56650	107,95	4.2
565/563	63,5	4.2
566/563	69,85	4.2
567/563	73,025	4.2
567A/563	71,438	4.2
567X/563	73,025	4.2
568/563	73,817	4.2
570/563	68,262	4.2
575/572	76,2	4.2
575/572X	76,2	4.2
575S/572	76,2	4.2
576/572	73,025	4.2
5760/5735	76,2	4.2
576201.	12	22.1
576205.	25	22.1
577/572	74,612	4.2
577768.	340	22.1
577796.	480	22.1
580/572	82,55	4.2
580/572X	82,55	4.2
581/572	80,962	4.2
582/572	82,55	4.2
58708.	41	22.1
58709.	46	22.1
58712.	60	22.1
590A/592A	76,2	4.2
59175/59412	44,45	4.2
59200/59412	50,8	4.2
59201/59412	50,8	4.2
593/592A	88,9	4.2
593A/592A	88,9	4.2
594/592A	95,25	4.2
594/593X	95,25	4.2
594805.	25	22.1
594807.	35	22.1
594808.	40	22.1
594809.	45	22.1
594A/592A	95,25	4.2
594A/592XE	95,25	4.2
594A/592XS	95,25	4.2
595/592A	82,55	4.2
596/592A	85,725	4.2
597/750.	750	22.1
598/592A	92,075	4.2
598A/592A	92,075	4.2
60/1,5	1,5	1.1
60/1,5 2RS	1,5	1.1
60/1,5 ZZ	1,5	1.1
60/2,5	2,5	1.1
60/2,5 2RS	2,5	1.1
60/2,5 ZZ	2,5	1.1
60/22	22	1.2
60/22 2RS	22	1.3
60/28	28	1.2
60/28 2RS	28	1.3
60/32	32	1.2
60/32 2RS	32	1.3
60/500	500	1.2
60/530	530	1.2
60/560	560	1.2
60/600	600	1.2
60/630	630	1.2
60/670	670	1.2
60/710	710	1.2
60/750	750	1.2
60/800	800	1.2
6000	10	1.2
6000 2RS	10	1.3
6000 ZZ	10	1.4
6001	12	1.2
6001 2RS	12	1.3
6001 ZZ	12	1.4

Index	d [mm]	Tab.No
60018.	8	22.1
6002	15	1.2
6002 2RS	15	1.3
6002 ZZ	15	1.4
60024.	4	22.1
60025.	5	22.1
60026.	6	22.1
60027.	7	22.1
60029.	9	22.1
6003	17	1.2
6003 2RS	17	1.3
6003 ZZ	17	1.4
6003.	3	22.1
6004	20	1.2
6004 2RS	20	1.3
6004 ZZ	20	1.4
6004.	4	22.1
6005	25	1.2
6005 2RS	25	1.3
6005 ZZ	25	1.4
6006	30	1.2
6006 2RS	30	1.3
6006 ZZ	30	1.4
6006.	6	22.1
60061.	1	22.1
60064.	4	22.1
60066.	6	22.1
6007	35	1.2
6007 2RS	35	1.3
6007 ZZ	35	1.4
60075.	5	22.1
6008	40	1.2
6008 2RS	40	1.3
6008 ZZ	40	1.4
6008.	8	22.1
60089.	9	22.1
6009	45	1.2
6009 2RS	45	1.3
6009 ZZ	45	1.4
6010	50	1.2
6010 2RS	50	1.3
6010 ZZ	50	1.4
6010.	10	22.1
60104.	20	22.1
60106.	30	22.1
60107.	35	22.1
6011	55	1.2
6011 2RS	55	1.3
6011 ZZ	55	1.4
60110.	50	22.1
60111.	55	22.1
60112.	60	22.1
60114.	70	22.1
60115.	75	22.1
60116.	80	22.1
60118.	90	22.1
6012	60	1.2
6012 2RS	60	1.3
6012 ZZ	60	1.4
6012.	12	22.1
60120.	100	22.1
60121.	105	22.1
6013	65	1.2
6013 2RS	65	1.3
6013 ZZ	65	1.4
6014	70	1.2
6014 2RS	70	1.3
6014 ZZ	70	1.4
6015	75	1.2
6015 2RS	75	1.3
6015 ZZ	75	1.4
6015.	15	22.1
6016	80	1.2
6016 2RS	80	1.3
6016 ZZ	80	1.4
6017	85	1.2
6017 2RS	85	1.3
6017 ZZ	85	1.4
6017.	7	22.1
6018	90	1.2
6018 2RS	90	1.3
6018 ZZ	90	1.4
6019	95	1.2
6019 2RS	95	1.3
6019 ZZ	95	1.4
602	2	1.1
602 2RS	2	1.1
602 ZZ	2	1.1
6020	100	1.2
6020 2RS	100	1.3

Index	d [mm]	Tab.No
6020 ZZ	100	1.4
6020.	20	22.1
60200.	10	22.1
60203.	17	22.1
60204.	20	22.1
60205.	25	22.1
60206.	30	22.1
60207.	35	22.1
60208.	40	22.1
60209.	45	22.1
6021	105	1.2
6021 2RS	105	1.3
6021 ZZ	105	1.4
60210.	50	22.1
60211.	55	22.1
60212.	60	22.1
60214.	70	22.1
60215.	75	22.1
6022	110	1.2
6022 2RS	110	1.3
6022 ZZ	110	1.4
60220.	100	22.1
6023.	3	22.1
6024	120	1.2
6024 2RS	120	1.3
6024 ZZ	120	1.4
6025.	5	22.1
6026	130	1.2
6026 2RS	130	1.3
6026 ZZ	130	1.4
6026.	6	22.1
6027.	7	22.1
6028	140	1.2
6028 2RS	140	1.3
6028 ZZ	140	1.4
6028.	8	22.1
603	3	1.1
603 2RS	3	1.1
603 ZZ	3	1.1
6030	150	1.2
6030 2RS	150	1.3
6030 ZZ	150	1.4
60304.	20	22.1
60305.	25	22.1
60306.	30	22.1
60307.	35	22.1
60308.	40	22.1
60309.	45	22.1
60310.	50	22.1
60311.	55	22.1
60312.	60	22.1
60313.	65	22.1
60314.	70	22.1
6032	160	1.2
6032 2RS	160	1.3
6032 ZZ	160	1.4
6034	170	1.2
6034 ZZ	170	1.4
6036	180	1.2
6036 ZZ	180	1.4
6038	190	1.2
6038 ZZ	190	1.4
604	4	1.1
604 2RS	4	1.1
604 ZZ	4	1.1
6040	200	1.2
6040 ZZ	200	1.4
6044	220	1.2
6048	240	1.2
605	5	1.1
605 2RS	5	1.1
605 ZZ	5	1.1
6052	260	1.2
6056	280	1.2
606	6	1.1
606 2RS	6	1.1
606 ZZ	6	1.1
6060	300	1.2
6064	320	1.2
6068	340	1.2
607	7	1.1
607 2RS	7	1.1
607 ZZ	7	1.1
6072	360	1.2
60722.	110	22.1
6076	380	1.2
608	8	1.1
608 2RS	8	1.1
608 ZZ	8	1.1
6080	400	1.2

Index	d [mm]	Tab.No
6084	420	1.2
609	9	1.1
609 2RS	9	1.1
609 ZZ	9	1.1
60902.	16	22.1
6101.	12	22.1
6102.	15	22.1
617/2	2	1.1
617/2 2RS	2	1.1
617/2 ZZ	2	1.1
617/2,5	2,5	1.1
617/2,5 2RS	2,5	1.1
617/2,5 ZZ	2,5	1.1
617/3	3	1.1
617/3 2RS	3	1.1
617/3 ZZ	3	1.1
617/4	4	1.1
617/4 2RS	4	1.1
617/4 ZZ	4	1.1
617/5	5	1.1
617/5 2RS	5	1.1
617/5 ZZ	5	1.1
617/6	6	1.1
617/6 2RS	6	1.1
617/6 ZZ	6	1.1
617/7	7	1.1
617/7 2RS	7	1.1
617/7 ZZ	7	1.1
617/8	8	1.1
617/8 2RS	8	1.1
617/8 ZZ	8	1.1
617/9	9	1.1
617/9 2RS	9	1.1
617/9 ZZ	9	1.1
61700	10	1.2
61701	12	1.2
61702	15	1.2
61703	17	1.2
61704	20	1.2
61705	25	1.2
61706	30	1.2
618/1	1	1.1
618/1 2RS	1	1.1
618/1 ZZ	1	1.1
618/1,5	1,5	1.1
618/1,5 2RS	1,5	1.1
618/1,5 ZZ	1,5	1.1
618/1000	1000	1.2
618/1060	1060	1.2
618/1120	1120	1.2
618/1180	1180	1.2
618/1250	1250	1.2
618/1320	1320	1.2
618/1400	1400	1.2
618/2	2	1.1
618/2 2RS	2	1.1
618/2 ZZ	2	1.1
618/2,5	2,5	1.1
618/2,5 2RS	2,5	1.1
618/2,5 ZZ	2,5	1.1
618/3	3	1.1
618/3 2RS	3	1.1
618/3 ZZ	3	1.1
618/4	4	1.1
618/4 2RS	4	1.1
618/4 ZZ	4	1.1
618/5	5	1.1
618/5 2RS	5	1.1
618/5 ZZ	5	1.1
618/500	500	1.2
618/530	530	1.2
618/560	560	1.2
618/6	6	1.1
618/6 2RS	6	1.1
618/6 ZZ	6	1.1
618/600	600	1.2
618/630	630	1.2
618/670	670	1.2
618/7	7	1.1
618/7 2RS	7	1.1
618/7 ZZ	7	1.1
618/710	710	1.2
618/750	750	1.2
618/8	8	1.1
618/8 2RS	8	1.1
618/8 ZZ	8	1.1
618/800	800	1.2
618/9	9	1.1
618/9 2RS	9	1.1
618/9 ZZ	9	1.1

https://nppnovoteh.com

23. INDEX

Index	d [mm]	Tab.No
618/900	900	1.2
618/950	950	1.2
61800	10	1.2
61800 2RS	10	1.3
61800 ZZ	10	1.4
61801	12	1.2
61801 2RS	12	1.3
61801 ZZ	12	1.4
61802	15	1.2
61802 2RS	15	1.3
61802 ZZ	15	1.4
61803	17	1.2
61803 2RS	17	1.3
61803 ZZ	17	1.4
61804	20	1.2
61804 2RS	20	1.3
61804 ZZ	20	1.4
61805	25	1.2
61805 2RS	25	1.3
61805 ZZ	25	1.4
61806	30	1.2
61806 2RS	30	1.3
61806 ZZ	30	1.4
61807	35	1.2
61807 2RS	35	1.3
61807 ZZ	35	1.4
61808	40	1.2
61808 2RS	40	1.3
61808 ZZ	40	1.4
61809	45	1.2
61809 2RS	45	1.3
61809 ZZ	45	1.4
61810	50	1.2
61810 2RS	50	1.3
61810 ZZ	50	1.4
61811	55	1.2
61811 2RS	55	1.3
61811 ZZ	55	1.4
61812	60	1.2
61812 2RS	60	1.3
61812 ZZ	60	1.4
61813	65	1.2
61813 2RS	65	1.3
61813 ZZ	65	1.4
61814	70	1.2
61814 2RS	70	1.3
61814 ZZ	70	1.4
61815	75	1.2
61815 2RS	75	1.3
61815 ZZ	75	1.4
61816	80	1.2
61816 2RS	80	1.3
61816 ZZ	80	1.4
61817	85	1.2
61817 2RS	85	1.3
61817 ZZ	85	1.4
61818	90	1.2
61818 2RS	90	1.3
61818 ZZ	90	1.4
61819	95	1.2
61819 2RS	95	1.3
61819 ZZ	95	1.4
61820	100	1.2
61820 2RS	100	1.3
61820 ZZ	100	1.4
61821	105	1.2
61821 2RS	105	1.3
61821 ZZ	105	1.4
61822	110	1.2
61822 2RS	110	1.3
61822 ZZ	110	1.4
61824	120	1.2
61824 2RS	120	1.3
61824 ZZ	120	1.4
61826	130	1.2
61826 2RS	130	1.3
61826 ZZ	130	1.4
61828	140	1.2
61828 2RS	140	1.3
61828 ZZ	140	1.4
61830	150	1.2
61830 ZZ	150	1.4
61832	160	1.2
61832 ZZ	160	1.4
61834	170	1.2
61834 ZZ	170	1.4
61836	180	1.2
61836 ZZ	180	1.4
61838	190	1.2
61838 ZZ	190	1.4
61840	200	1.2
61844	220	1.2
61848	240	1.2
61852	260	1.2
61856	280	1.2
61860	300	1.2
61864	320	1.2
61868	340	1.2
61872	360	1.2
61876	380	1.2
61880	400	1.2
61884	420	1.2
61888	440	1.2
61892	460	1.2
61896	480	1.2
619/1	1	1.1
619/1 2RS	1	1.1
619/1 ZZ	1	1.1
619/1,5	1,5	1.1
619/1,5 2RS	1,5	1.1
619/1,5 ZZ	1,5	1.1
619/2	2	1.1
619/2 2RS	2	1.1
619/2 ZZ	2	1.1
619/2,5	2,5	1.1
619/2,5 2RS	2,5	1.1
619/2,5 ZZ	2,5	1.1
619/3	3	1.1
619/3 2RS	3	1.1
619/3 ZZ	3	1.1
619/4	4	1.1
619/4 2RS	4	1.1
619/4 ZZ	4	1.1
619/5	5	1.1
619/5 2RS	5	1.1
619/5 ZZ	5	1.1
619/500	500	1.2
619/530	530	1.2
619/560	560	1.2
619/6	6	1.1
619/6 2RS	6	1.1
619/6 ZZ	6	1.1
619/600	600	1.2
619/612	50,8	4.2
619/630	630	1.2
619/670	670	1.2
619/7	7	1.1
619/7 2RS	7	1.1
619/7 ZZ	7	1.1
619/710	710	1.2
619/750	750	1.2
619/8	8	1.1
619/8 2RS	8	1.1
619/8 ZZ	8	1.1
619/800	800	1.2
619/9	9	1.1
619/9 2RS	9	1.1
619/9 ZZ	9	1.1
61900	10	1.2
61900 2RS	10	1.3
61900 ZZ	10	1.4
61901	12	1.2
61901 2RS	12	1.3
61901 ZZ	12	1.4
61902	15	1.2
61902 2RS	15	1.3
61902 ZZ	15	1.4
61903	17	1.2
61903 2RS	17	1.3
61903 ZZ	17	1.4
61904	20	1.2
61904 2RS	20	1.3
61904 ZZ	20	1.4
61905	25	1.2
61905 2RS	25	1.3
61905 ZZ	25	1.4
61906	30	1.2
61906 2RS	30	1.3
61906 ZZ	30	1.4
61907	35	1.2
61907 2RS	35	1.3
61907 ZZ	35	1.4
61908	40	1.2
61908 2RS	40	1.3
61908 ZZ	40	1.4
61909	45	1.2
61909 2RS	45	1.3
61909 ZZ	45	1.4
61910	50	1.2
61910 2RS	50	1.3
61910 ZZ	50	1.4
61911	55	1.2
61911 2RS	55	1.3
61911 ZZ	55	1.4
61912	60	1.2
61912 2RS	60	1.3
61912 ZZ	60	1.4
61913	65	1.2
61913 2RS	65	1.3
61913 ZZ	65	1.4
61914	70	1.2
61914 2RS	70	1.3
61914 ZZ	70	1.4
61915	75	1.2
61915 2RS	75	1.3
61915 ZZ	75	1.4
61916	80	1.2
61916 2RS	80	1.3
61916 ZZ	80	1.4
61917	85	1.2
61917 ZZ	85	1.4
61918	90	1.2
61918 ZZ	90	1.4
61919 ZZ	95	1.4
61920	100	1.2
61920 ZZ	100	1.4
61921 ZZ	105	1.4
61922	110	1.2
61922 ZZ	110	1.4
61924	120	1.2
61924 ZZ	120	1.4
61926	130	1.2
61926 ZZ	130	1.4
61928	140	1.2
61928 ZZ	140	1.4
61930	150	1.2
61930 ZZ	150	1.4
61932	160	1.2
61934	170	1.2
61936	180	1.2
61940	200	1.2
61944	220	1.2
61948	240	1.2
61952	260	1.2
61956	280	1.2
61960	300	1.2
61964	320	1.2
61968	340	1.2
61972	360	1.2
61976	380	1.2
61980	400	1.2
61984	420	1.2
61988	440	1.2
61992	460	1.2
61996	480	1.2
62.	2	22.1
62/22	22	1.2
62/22 2RS	22	1.3
62/28	28	1.2
62/28 2RS	28	1.3
62/32	32	1.2
62/32 2RS	32	1.3
6200	10	1.2
6200 2RS	10	1.3
6200 ZZ	10	1.4
6201	12	1.2
6201 2RS	12	1.3
6201 ZZ	12	1.4
6202	15	1.2
6202 2RS	15	1.3
6202 ZZ	15	1.4
6203	17	1.2
6203 2RS	17	1.3
6203 ZZ	17	1.4
6204	20	1.2
6204 2RS	20	1.3
6204 ZZ	20	1.4
6204.	20	22.1
6205	25	1.2
6205 2RS	25	1.3
6205 ZZ	25	1.4
6206	30	1.2
6206 2RS	30	1.3
6206 ZZ	30	1.4
6207	35	1.2
6207 2RS	35	1.3
6207 ZZ	35	1.4
6208	40	1.2
6208 2RS	40	1.3
6208 ZZ	40	1.4
6209	45	1.2
6209 2RS	45	1.3
6209 ZZ	45	1.4
621/612	53,975	4.2
6210	50	1.2
6210 2RS	50	1.3
6210 ZZ	50	1.4
6211	55	1.2
6211 2RS	55	1.3
6211 ZZ	55	1.4
6212	60	1.2
6212 2RS	60	1.3
6212 ZZ	60	1.4
6213	65	1.2
6213 2RS	65	1.3
6213 ZZ	65	1.4
6214	70	1.2
6214 2RS	70	1.3
6214 ZZ	70	1.4
6215	75	1.2
6215 2RS	75	1.3
6215 ZZ	75	1.4
6216	80	1.2
6216 2RS	80	1.3
6216 ZZ	80	1.4
6217	85	1.2
6217 2RS	85	1.3
6217 ZZ	85	1.4
6218	90	1.2
6218 2RS	90	1.3
6218 ZZ	90	1.4
6219	95	1.2
6219 2RS	95	1.3
6219 ZZ	95	1.4
6220	100	1.2
6220 2RS	100	1.3
6220 ZZ	100	1.4
62200 2RS	10	1.3
62201 2RS	12	1.3
62202 2RS	15	1.3
62203 2RS	17	1.3
62204 2RS	20	1.3
62205 2RS	25	1.3
62206 2RS	30	1.3
62206.	30	22.1
62207 2RS	35	1.3
62208 2RS	40	1.3
62209 2RS	45	1.3
6221	105	1.2
6221 2RS	105	1.3
6221 ZZ	105	1.4
62210 2RS	50	1.3
62211 2RS	55	1.3
62212 2RS	60	1.3
62213 2RS	65	1.3
62214 2RS	70	1.3
6222	110	1.2
6222 2RS	110	1.3
6222 ZZ	110	1.4
6224	120	1.2
6224 2RS	120	1.3
6224 ZZ	120	1.4
6226	130	1.2
6226 ZZ	130	1.4
6228	140	1.2
6228 ZZ	140	1.4
623	3	1.1
623 2RS	3	1.1
623 ZZ	3	1.1
623/612	57,15	4.2
6230	150	1.2
6230 ZZ	150	1.4
62300 2RS	10	1.3
62301 2RS	12	1.3
62302 2RS	15	1.3
62303 2RS	17	1.3
62304 2RS	20	1.3
62305 2RS	25	1.3
62306 2RS	30	1.3
62307 2RS	35	1.3
62308 2RS	40	1.3
62309 2RS	45	1.3
62310 2RS	50	1.3
62310.	50	22.1
62311 2RS	55	1.3
62312 2RS	60	1.3
62313 2RS	65	1.3
62313.	65	22.1
62314 2RS	70	1.3
62314.	70	22.1
62315.	75	22.1
62318.	90	22.1
6232	160	1.2
6232 ZZ	160	1.4
62320.	100	22.1
62330.	150	22.1
6234	170	1.2
6234 ZZ	170	1.4
6236	180	1.2
6236 ZZ	180	1.4
6238	190	1.2
624	4	1.1
624 2RS	4	1.1
624 ZZ	4	1.1
6240	200	1.2
6240 ZZ	200	1.4
62413.	65	22.1
62414.	70	22.1
62415.	75	22.1
62417.	85	22.1
62422.	110	22.1
6244	220	1.2
6248	240	1.2
625	5	1.1
625 2RS	5	1.1
625 ZZ	5	1.1
6252	260	1.2
62536.	180	22.1
6254704.	24	22.1
6254902.	20	22.1
6254904.	25	22.1
6254905.	30	22.1
6254906.	35	22.1
6256	280	1.2
626	6	1.1
626 2RS	6	1.1
626 ZZ	6	1.1
6260	300	1.2
62612.	60	22.1
62613.	65	22.1
6264	320	1.2
6268	340	1.2
627	7	1.1
627 2RS	7	1.1
627 ZZ	7	1.1
6272	360	1.2
6276	380	1.2
6277/6220	44,45	4.2
628	8	1.1
628 2RS	8	1.1
628 ZZ	8	1.1
628/4 ZZ	4	1.1
628/5 ZZ	5	1.1
628/6 ZZ	6	1.1
628/7 ZZ	7	1.1
628/8 ZZ	8	1.1
628/9 ZZ	9	1.1
6280	400	1.2
6280/6220	53,975	4.2
629	9	1.1
629 2RS	9	1.1
629 ZZ	9	1.1
63/22	22	1.2
63/22 2RS	22	1.3
63/28	28	1.2
63/28 2RS	28	1.3
63/32	32	1.2
63/32 2RS	32	1.3
6300	10	1.2
6300 2RS	10	1.3
6300 ZZ	10	1.4
63000 2RS	10	1.3
63001 2RS	12	1.3
63002 2RS	15	1.3
63003 2RS	17	1.3
63004 2RS	20	1.3
63005 2RS	25	1.3
63006 2RS	30	1.3
63007 2RS	35	1.3
63008 2RS	40	1.3
63009 2RS	45	1.3
6301	12	1.2
6301 2RS	12	1.3
6301 ZZ	12	1.4
63010 2RS	50	1.3
6302	15	1.2
6302 2RS	15	1.3
6302 ZZ	15	1.4
6303	17	1.2
6303 2RS	17	1.3

https://nppnovoteh.com

Index	d [mm]	Tab.No
6303 ZZ	17	1.4
6304	20	1.2
6304 2RS	20	1.3
6304 ZZ	20	1.4
6305	25	1.2
6305 2RS	25	1.3
6305 ZZ	25	1.4
6306	30	1.2
6306 2RS	30	1.3
6306 ZZ	30	1.4
6307	35	1.2
6307 2RS	35	1.3
6307 ZZ	35	1.4
6308	40	1.2
6308 2RS	40	1.3
6308 ZZ	40	1.4
6309	45	1.2
6309 2RS	45	1.3
6309 ZZ	45	1.4
6310	50	1.2
6310 2RS	50	1.3
6310 ZZ	50	1.4
6311	55	1.2
6311 2RS	55	1.3
6311 ZZ	55	1.4
6312	60	1.2
6312 2RS	60	1.3
6312 ZZ	60	1.4
6313	65	1.2
6313 2RS	65	1.3
6313 ZZ	65	1.4
6314	70	1.2
6314 2RS	70	1.3
6314 ZZ	70	1.4
6315	75	1.2
6315 2RS	75	1.3
6315 ZZ	75	1.4
6316	80	1.2
6316 2RS	80	1.3
6316 ZZ	80	1.4
6317	85	1.2
6317 2RS	85	1.3
6317 ZZ	85	1.4
6318	90	1.2
6318 2RS	90	1.3
6318 ZZ	90	1.4
6319	95	1.2
6319 2RS	95	1.3
6319 ZZ	95	1.4
6320	100	1.2
6320 2RS	100	1.3
6320 ZZ	100	1.4
63202 2RS	15	1.3
63202 ZZ	15	1.4
63203 2RS	17	1.3
63203 ZZ	17	1.4
63204 2RS	20	1.3
63204 ZZ	20	1.4
63205 2RS	25	1.3
63205 ZZ	25	1.4
63206 2RS	30	1.3
63206 ZZ	30	1.4
63207 2RS	35	1.3
63207 ZZ	35	1.4
63208 2RS	40	1.3
63208 ZZ	40	1.4
63209 2RS	45	1.3
63209 ZZ	45	1.4
6321	105	1.2
6321 ZZ	105	1.4
63210 2RS	50	1.3
63210 ZZ	50	1.4
63211 2RS	55	1.3
63211 ZZ	55	1.4
63212 2RS	60	1.3
63212 ZZ	60	1.4
63213 2RS	65	1.3
63213 ZZ	65	1.4
63214 2RS	70	1.3
63214 ZZ	70	1.4
63215 2RS	75	1.3
63215 ZZ	75	1.4
63216 2RS	80	1.3
63216 ZZ	80	1.4
6322	110	1.2
6322 ZZ	110	1.4
6324	120	1.2
6324 ZZ	120	1.4
6326	130	1.2
6326 ZZ	130	1.4
6328	140	1.2
6328 ZZ	140	1.4
6330	150	1.2
63304 2RS	20	1.3
63304 ZZ	20	1.4
63305 2RS	25	1.3
63305 ZZ	25	1.4
63306 2RS	30	1.3
63306 ZZ	30	1.4
63307 2RS	35	1.3
63307 ZZ	35	1.4
63308 2RS	40	1.3
63308 ZZ	40	1.4
63309 2RS	45	1.3
63309 ZZ	45	1.4
63310 2RS	50	1.3
63310 ZZ	50	1.4
63311 2RS	55	1.3
63311 ZZ	55	1.4
63312 2RS	60	1.3
63312 ZZ	60	1.4
63313 2RS	65	1.3
63313 ZZ	65	1.4
63314 2RS	70	1.3
63314 ZZ	70	1.4
63315 2RS	75	1.3
63315 ZZ	75	1.4
63316 2RS	80	1.3
63316 ZZ	80	1.4
63317 2RS	85	1.3
63317 ZZ	85	1.4
63318 2RS	90	1.3
63318 ZZ	90	1.4
6332	160	1.2
6334	170	1.2
6336	180	1.2
6338	190	1.2
634	4	1.1
634 2RS	4	1.1
634 ZZ	4	1.1
6340	200	1.2
6344	220	1.2
6348	240	1.2
635	5	1.1
635 2RS	5	1.1
635 ZZ	5	1.1
6352	260	1.2
6356	280	1.2
636/632	53,975	4.2
6360	300	1.2
6364	320	1.2
6368	340	1.2
636905.	23,5	22.1
636906.	28	22.1
6379/6320	65,088	4.2
63800	10	1.2
63800 2RS	10	1.3
63800 ZZ	10	1.4
63801	12	1.2
63801 2RS	12	1.3
63801 ZZ	12	1.4
63802	15	1.2
63802 2RS	15	1.3
63802 ZZ	15	1.4
63803	17	1.2
63803 2RS	17	1.3
63803 ZZ	17	1.4
6381/6320	54,988	4.2
6382/6320	63,5	4.2
6386/6320	66,675	4.2
6389/6320	66,675	4.2
639/632	63,5	4.2
640013.	3	22.1
6403	17	1.2
6403 ZZ	17	1.4
6404	20	1.2
6404 ZZ	20	1.4
6405	25	1.2
6405 ZZ	25	1.4
6406	30	1.2
6406 ZZ	30	1.4
6407	35	1.2
6407 ZZ	35	1.4
6408	40	1.2
6408 ZZ	40	1.4
6409	45	1.2
6409 ZZ	45	1.4
641/632	66,675	4.2
641/633	66,675	4.2
6410	50	1.2
6410 ZZ	50	1.4
6411	55	1.2
6412	60	1.2
6413	65	1.2
6414	70	1.2
6415	75	1.2
6416	80	1.2
6417	85	1.2
6418	90	1.2
6419	95	1.2
6420	100	1.2
6421	105	1.2
6422	110	1.2
6424	120	1.2
6426	130	1.2
643/632	69,85	4.2
644/632	71,438	4.2
6442134.	170	22.1
6442144.	220	22.1
64432/64700	109,974	4.2
64433/64700	109,992	4.2
64450/64700	114,3	4.2
64450/64708	114,3	4.2
64452A/64700	114,975	4.2
6460/6420	73,025	4.2
6461/6420	76,2	4.2
6461A/6420	76,2	4.2
6462164.	320	22.1
65200/65500	50,8	4.2
65212/65500	53,975	4.2
65225/65500	57,15	4.2
65237/65500	60,325	4.2
65237A/65500	60,325	4.2
65390/65320	49,212	4.2
65395/65320	50,8	4.2
655/653	69,85	4.2
6559C/6535	82,55	4.2
656312.	60	22.1
656322.	110	22.1
656340.	200	22.1
656412.	60	22.1
656432.	160	22.1
657/653	73,025	4.2
6575/6535	76,2	4.2
6576/6535	76,2	4.2
6576C/6520	76,2	4.2
6580/6535	88,9	4.2
659/653	76,2	4.2
661/653	79,375	4.2
66118.	90	22.1
66200/66462	50,8	4.2
66202.	15	22.1
66203.	17	22.1
66204.	20	22.1
66205.	25	22.1
66207.	35	22.1
66208.	40	22.1
66209.	45	22.1
66210.	50	22.1
66211.	55	22.1
66211.	105	22.1
66212.	60	22.1
66212/66462	53,975	4.2
66215.	75	22.1
66217.	85	22.1
66218.	90	22.1
66219.	95	22.1
66220.	100	22.1
66225/66462	57,15	4.2
663/652	82,55	4.2
663/653	82,55	4.2
66303.	17	22.1
66307.	35	22.1
66308.	40	22.1
66309.	45	22.1
66311.	55	22.1
66312.	60	22.1
66314.	70	22.1
66315.	75	22.1
66319.	95	22.1
66322.	110	22.1
66406.	30	22.1
66408.	40	22.1
66409.	45	22.1
66410.	50	22.1
66412.	60	22.1
66414.	70	22.1
66418.	90	22.1
664414.	70	22.1
664514.	70	22.1
664613.	65	22.1
664614.	68	22.1
664713.	62	22.1
664714.	72	22.1
664812.	62	22.1
664813.	65	22.1
664815.	75	22.1
664818.	89	22.1
664906.	28	22.1
664908.	40	22.1
664913.	62	22.1
664915.	75	22.1
664916.	81	22.1
665/653	85,725	4.2
66584/66520	53,975	4.2
66589/66520	59,972	4.2
665A/653	85,725	4.2
666311.	55	22.1
666322.	110	22.1
666432.	160	22.1
6697/900.	900	22.1
6703.	17	22.1
67204.	20	22.1
672778.	390	22.1
67388/67322	127	4.2
67389/67322	130,175	4.2
67390/67322	133,35	4.2
67391/67322	133,35	4.2
67425/67675	107,95	4.2
67513.	65	22.1
676/850.	850	22.1
677/672	85,725	4.2
677/965.	965	22.1
67709.	45	22.1
67712.	60	22.1
67728.	140	22.1
67738.	190	22.1
67744.	220	22.1
67780/67720	165,1	4.2
67782/67720	168,275	4.2
67786/67720	174,625	4.2
67787/67720	174,625	4.2
67790/67720	177,8	4.2
67791/67720	177,8	4.2
67814.	70	22.1
67818.	90	22.1
67848.	240	22.1
67852.	260	22.1
67883/67820	184,15	4.2
67884/67820	187,325	4.2
67885/67820	190,5	4.2
679/622.	622,3	22.1
679/672	88,9	4.2
67910.	50,8	22.1
67912.	60	22.1
67920.	98,425	22.1
67928.	140	22.1
67983/67920	203,2	4.2
67985/67920	206,375	4.2
67989/67920	209,55	4.2
680235/680270	596,9	4.2
681/672	92,075	4.2
681A/672	92,075	4.2
683/672	95,25	4.2
683XA/672	95,25	4.2
68450/68712	114,3	4.2
68462/68709	117,475	4.2
68462/68712	117,475	4.2
68463/68712	117,475	4.2
685/672	98,425	4.2
687/672	101,6	4.2
688811.	55	22.1
688911.	52,388	22.1
697306.	30	22.1
697712.	60	22.1
697716.	80	22.1
697722.	110	22.1
697724.	120	22.1
697732.	160	22.1
697737.	185	22.1
697742.	210	22.1
697814.	70	22.1
697815.	75	22.1
697817.	85	22.1
697824.	120	22.1
697828.	140	22.1
697838.	190	22.1
697920.	98,425	22.1
697928.	140	22.1
700.	10	22.1
7000 A	10	2.1
7000 ATBP4	10	2.3
7000 B	10	2.1
7000 C	10	2.1
7000 CTBP4	10	2.3
7000101.	12	22.1
7000102.	15	22.1
7000103.	17	22.1
7000104.	20	22.1
7000105.	25	22.1
7000106.	30	22.1
7000107.	35	22.1
7000108.	40	22.1
7000109.	45	22.1
7000110.	50	22.1
7000111.	55	22.1
7000112.	60	22.1
7000113.	65	22.1
7000114.	70	22.1
7000115.	75	22.1
7000116.	80	22.1
7000117.	85	22.1
7000118.	90	22.1
7000120.	100	22.1
7000121.	105	22.1
7000124.	120	22.1
7000126.	130	22.1
7000130.	150	22.1
7000134.	170	22.1
7000136.	180	22.1
7000140.	200	22.1
7000144.	220	22.1
7000804.	20	22.1
7000805.	25	22.1
7000806.	30	22.1
7000807.	35	22.1
7000808.	40	22.1
7000811.	55	22.1
7000824.	120	22.1
7000834.	170	22.1
7000910.	50	22.1
7000976.	330	22.1
7001 A	12	2.1
7001 ATBP4	12	2.3
7001 B	12	2.1
7001 C	12	2.1
7001 CTBP4	12	2.3
7002 A	15	2.1
7002 ATBP4	15	2.3
7002 B	15	2.1
7002 C	15	2.1
7002 CTBP4	15	2.3
7002134.	160	22.1
7002140.	200	22.1
7002148.	240	22.1
7003 A	17	2.1
7003 ATBP4	17	2.3
7003 B	17	2.1
7003 C	17	2.1
7003 CTBP4	17	2.3
7004 A	20	2.1
7004 ATBP4	20	2.3
7004 B	20	2.1
7004 C	20	2.1
7004 CTBP4	20	2.3
700409.	45	22.1
7005 A	25	2.1
7005 ATBP4	25	2.3
7005 B	25	2.1
7005 C	25	2.1
7005 CTBP4	25	2.3
7006 A	30	2.1
7006 ATBP4	30	2.3
7006 B	30	2.1
7006 C	30	2.1
7006 CTBP4	30	2.3
7007 A	35	2.1
7007 ATBP4	35	2.3
7007 B	35	2.1
7007 C	35	2.1
7007 CTBP4	35	2.3
7008 A	40	2.1
7008 ATBP4	40	2.3
7008 B	40	2.1
7008 C	40	2.1
7008 CTBP4	40	2.3
7009 A	45	2.1
7009 ATBP4	45	2.3
7009 B	45	2.1
7009 C	45	2.1

https://nppnovoteh.com

23. INDEX

Index	d [mm]	Tab.No
7009 CTBP4	45	2.3
7010 A	50	2.1
7010 ATBP4	50	2.3
7010 B	50	2.1
7010 C	50	2.1
7010 CTBP4	50	2.3
7011 A	55	2.1
7011 ATBP4	55	2.3
7011 B	55	2.1
7011 C	55	2.1
7011 CTBP4	55	2.3
7012 A	60	2.1
7012 ATBP4	60	2.3
7012 B	60	2.1
7012 C	60	2.1
7012 CTBP4	60	2.3
7013 A	65	2.1
7013 ATBP4	65	2.3
7013 B	65	2.1
7013 C	65	2.1
7013 CTBP4	65	2.3
7014 A	70	2.1
7014 ATBP4	70	2.3
7014 B	70	2.1
7014 C	70	2.1
7014 CTBP4	70	2.3
7015 A	75	2.1
7015 ATBP4	75	2.3
7015 B	75	2.1
7015 C	75	2.1
7015 CTBP4	75	2.3
7016 A	80	2.1
7016 ATBP4	80	2.3
7016 B	80	2.1
7016 C	80	2.1
7016 CTBP4	80	2.3
7017 A	85	2.1
7017 ATBP4	85	2.3
7017 B	85	2.1
7017 C	85	2.1
7017 CTBP4	85	2.3
7018 A	90	2.1
7018 ATBP4	90	2.3
7018 B	90	2.1
7018 C	90	2.1
7018 CTBP4	90	2.3
7019 A	95	2.1
7019 ATBP4	95	2.3
7019 B	95	2.1
7019 C	95	2.1
7019 CTBP4	95	2.3
7020 A	100	2.1
7020 ATBP4	100	2.3
7020 B	100	2.1
7020 C	100	2.1
7020 CTBP4	100	2.3
7021 A	105	2.1
7021 ATBP4	105	2.3
7021 B	105	2.1
7021 C	105	2.1
7021 CTBP4	105	2.3
7022 A	110	2.1
7022 ATBP4	110	2.3
7022 B	110	2.1
7022 C	110	2.1
7022 CTBP4	110	2.3
7024 A	120	2.1
7024 ATBP4	120	2.3
7024 B	120	2.1
7024 C	120	2.1
7024 CTBP4	120	2.3
7026 A	130	2.1
7026 ATBP4	130	2.3
7026 B	130	2.1
7026 C	130	2.1
7026 CTBP4	130	2.3
7028 A	140	2.1
7028 ATBP4	140	2.3
7028 B	140	2.1
7028 C	140	2.1
7028 CTBP4	140	2.3
7030 A	150	2.1
7030 ATBP4	150	2.3
7030 B	150	2.1
7030 C	150	2.1
7030 CTBP4	150	2.3
7032 A	160	2.1
7032 ATBP4	160	2.3
7032 B	160	2.1
7032 C	160	2.1
7032 CTBP4	160	2.3
7034 A	170	2.1
7034 ATBP4	170	2.3
7034 B	170	2.1
7034 C	170	2.1
7034 CTBP4	170	2.3
7036 A	180	2.1
7036 ATBP4	180	2.3
7036 B	180	2.1
7036 C	180	2.1
7036 CTBP4	180	2.3
7038 A	190	2.1
7038 ATBP4	190	2.3
7038 B	190	2.1
7038 C	190	2.1
7038 CTBP4	190	2.3
7040 A	200	2.1
7040 ATBP4	200	2.3
7040 B	200	2.1
7040 C	200	2.1
7040 CTBP4	200	2.3
7044 A	220	2.1
7044 ATBP4	220	2.3
7044 B	220	2.1
7044 CTBP4	220	2.3
704702.	16,3	22.1
7048 A	240	2.1
7048 ATBP4	240	2.3
7048 B	240	2.1
7048 CTBP4	240	2.3
704902.	15,2	22.1
704902.	15,235	22.1
704902.	15,235	22.1
705.	25	22.1
7052 A	260	2.1
7052 B	260	2.1
7056 A	280	2.1
7056 B	280	2.1
706 ATBP4	6	2.3
706 CTBP4	6	2.3
706.	30	22.1
7060 A	300	2.1
7060 B	300	2.1
7064 A	320	2.1
7064 B	320	2.1
7068 A	340	2.1
7068 B	340	2.1
707 ATBP4	7	2.3
707 CTBP4	7	2.3
7072 A	360	2.1
7072 B	360	2.1
7076 A	380	2.1
7076 B	380	2.1
708 ATBP4	8	2.3
708 CTBP4	8	2.3
709 ATBP4	9	2.3
709 CTBP4	9	2.3
709.	45	22.1
7097152.	260	22.1
7097156.	280	22.1
71/500.	500	22.1
71/600.	600	22.1
71/900.	900	22.1
710.	50	22.1
710134.	170	22.1
710207.	35	22.1
710309.	45	22.1
7138.	190	22.1
71412/71750	104,775	4.2
71425/71750	107,95	4.2
71450/71750	114,3	4.2
71453/71750	115,087	4.2
71455/71750	115,087	4.2
7168284.	420	22.1
7168436.	180	22.1
71800 ATBP4	10	2.3
71800 CTBP4	10	2.3
71801 ATBP4	12	2.3
71801 CTBP4	12	2.3
71802 ATBP4	15	2.3
71802 CTBP4	15	2.3
71803 ATBP4	17	2.3
71803 CTBP4	17	2.3
71804 ATBP4	20	2.3
71804 CTBP4	20	2.3
71805 ATBP4	25	2.3
71805 CTBP4	25	2.3
71806 ATBP4	30	2.3
71806 CTBP4	30	2.3
71807 ATBP4	35	2.3
71807 CTBP4	35	2.3
71808 ATBP4	40	2.3
71808 CTBP4	40	2.3
71809 ATBP4	45	2.3
71809 CTBP4	45	2.3
71810 ATBP4	50	2.3
71810 CTBP4	50	2.3
71811 ATBP4	55	2.3
71811 CTBP4	55	2.3
71812 ATBP4	60	2.3
71812 CTBP4	60	2.3
71813 ATBP4	65	2.3
71813 CTBP4	65	2.3
71814 ATBP4	70	2.3
71814 CTBP4	70	2.3
71815 ATBP4	75	2.3
71815 CTBP4	75	2.3
71816 ATBP4	80	2.3
71816 CTBP4	80	2.3
71817 ATBP4	85	2.3
71817 CTBP4	85	2.3
71818 ATBP4	90	2.3
71818 CTBP4	90	2.3
71819 ATBP4	95	2.3
71819 CTBP4	95	2.3
71820 ATBP4	100	2.3
71820 CTBP4	100	2.3
71821 ATBP4	105	2.3
71821 CTBP4	105	2.3
71822 ATBP4	110	2.3
71822 CTBP4	110	2.3
71824 ATBP4	120	2.3
71824 CTBP4	120	2.3
71826 ATBP4	130	2.3
71826 CTBP4	130	2.3
71828 ATBP4	140	2.3
71828 CTBP4	140	2.3
71830 ATBP4	150	2.3
71830 CTBP4	150	2.3
71832 ATBP4	160	2.3
71832 CTBP4	160	2.3
71834 ATBP4	170	2.3
71834 CTBP4	170	2.3
71836 ATBP4	180	2.3
71836 CTBP4	180	2.3
71838 ATBP4	190	2.3
71838 CTBP4	190	2.3
7184.	420	22.1
71840 ATBP4	200	2.3
71840 CTBP4	200	2.3
71844 ATBP4	220	2.3
71844 CTBP4	220	2.3
71848 ATBP4	240	2.3
71848 CTBP4	240	2.3
7188.	440	22.1
71900 ATBP4	10	2.3
71900 C	10	2.1
71900 CTBP4	10	2.3
71901 ATBP4	12	2.3
71901 C	12	2.1
71901 CTBP4	12	2.3
71902 ATBP4	15	2.3
71902 C	15	2.1
71902 CTBP4	15	2.3
71903 ATBP4	17	2.3
71903 C	17	2.1
71903 CTBP4	17	2.3
71904 ATBP4	20	2.3
71904 C	20	2.1
71904 CTBP4	20	2.3
71905 ATBP4	25	2.3
71905 C	25	2.1
71905 CTBP4	25	2.3
71906 ATBP4	30	2.3
71906 C	30	2.1
71906 CTBP4	30	2.3
71907 ATBP4	35	2.3
71907 C	35	2.1
71907 CTBP4	35	2.3
71908 ATBP4	40	2.3
71908 C	40	2.1
71908 CTBP4	40	2.3
71909 ATBP4	45	2.3
71909 C	45	2.1
71909 CTBP4	45	2.3
71910 ATBP4	50	2.3
71910 C	50	2.1
71910 CTBP4	50	2.3
71911 ATBP4	55	2.3
71911 C	55	2.1
71911 CTBP4	55	2.3
71912 ATBP4	60	2.3
71912 C	60	2.1
71912 CTBP4	60	2.3
71913 ATBP4	65	2.3
71913 C	65	2.1
71913 CTBP4	65	2.3
71914 ATBP4	70	2.3
71914 C	70	2.1
71914 CTBP4	70	2.3
71915 ATBP4	75	2.3
71915 C	75	2.1
71915 CTBP4	75	2.3
71916 ATBP4	80	2.3
71916 C	80	2.1
71916 CTBP4	80	2.3
71917 ATBP4	85	2.3
71917 C	85	2.1
71917 CTBP4	85	2.3
71918 ATBP4	90	2.3
71918 C	90	2.1
71918 CTBP4	90	2.3
71919 ATBP4	95	2.3
71919 C	95	2.1
71919 CTBP4	95	2.3
71920 ATBP4	100	2.3
71920 C	100	2.1
71920 CTBP4	100	2.3
71921 ATBP4	105	2.3
71921 C	105	2.1
71921 CTBP4	105	2.3
71922 ATBP4	110	2.3
71922 C	110	2.1
71922 CTBP4	110	2.3
71924 ATBP4	120	2.3
71924 C	120	2.1
71924 CTBP4	120	2.3
71926 ATBP4	130	2.3
71926 C	130	2.1
71926 CTBP4	130	2.3
71928 ATBP4	140	2.3
71928 C	140	2.1
71928 CTBP4	140	2.3
71930 ATBP4	150	2.3
71930 C	150	2.1
71930 CTBP4	150	2.3
71932 ATBP4	160	2.3
71932 C	160	2.1
71932 CTBP4	160	2.3
71934 ATBP4	170	2.3
71934 CTBP4	170	2.3
71936 ATBP4	180	2.3
71936 CTBP4	180	2.3
71938 ATBP4	190	2.3
71938 CTBP4	190	2.3
71940 ATBP4	200	2.3
71940 CTBP4	200	2.3
71944 ATBP4	220	2.3
71944 CTBP4	220	2.3
71948 ATBP4	240	2.3
71948 CTBP4	240	2.3
71952 ATBP4	260	2.3
71952 CTBP4	260	2.3
71956 ATBP4	280	2.3
71956 CTBP4	280	2.3
71960 ATBP4	300	2.3
71960 CTBP4	300	2.3
71964 ATBP4	320	2.3
71964 CTBP4	320	2.3
71968 ATBP4	340	2.3
71968 CTBP4	340	2.3
71972 ATBP4	360	2.3
71972 CTBP4	360	2.3
7200 A	10	2.1
7200 ATBP4	10	2.3
7200 B	10	2.1
7200 C	10	2.1
7200 CTBP4	10	2.3
7201 A	12	2.1
7201 ATBP4	12	2.3
7201 B	12	2.1
7201 C	12	2.1
7201 CTBP4	12	2.3
7202 A	15	2.1
7202 ATBP4	15	2.3
7202 B	15	2.1
7202 C	15	2.1
7202 CTBP4	15	2.3
7202.	15	22.1
7203 A	17	2.1
7203 ATBP4	17	2.3
7203 B	17	2.1
7203 C	17	2.1
7203 CTBP4	17	2.3
7203.	17	22.1
7204 A	20	2.1
7204 ATBP4	20	2.3
7204 B	20	2.1
7204 C	20	2.1
7204 CTBP4	20	2.3
7204.	20	22.1
7205 A	25	2.1
7205 ATBP4	25	2.3
7205 B	25	2.1
7205 C	25	2.1
7205 CTBP4	25	2.3
7205.	25	22.1
7206 A	30	2.1
7206 ATBP4	30	2.3
7206 B	30	2.1
7206 C	30	2.1
7206 CTBP4	30	2.3
7206.	30	22.1
7207 A	35	2.1
7207 ATBP4	35	2.3
7207 B	35	2.1
7207 C	35	2.1
7207 CTBP4	35	2.3
7207.	35	22.1
7208 A	40	2.1
7208 ATBP4	40	2.3
7208 B	40	2.1
7208 C	40	2.1
7208 CTBP4	40	2.3
7208.	40	22.1
7209 A	45	2.1
7209 ATBP4	45	2.3
7209 B	45	2.1
7209 C	45	2.1
7209 CTBP4	45	2.3
7209.	45	22.1
7210 A	50	2.1
7210 ATBP4	50	2.3
7210 B	50	2.1
7210 C	50	2.1
7210 CTBP4	50	2.3
7210.	50	22.1
7211 A	55	2.1
7211 ATBP4	55	2.3
7211 B	55	2.1
7211 C	55	2.1
7211 CTBP4	55	2.3
7211.	55	22.1
7212 A	60	2.1
7212 ATBP4	60	2.3
7212 B	60	2.1
7212 C	60	2.1
7212 CTBP4	60	2.3
7212.	60	22.1
7213 A	65	2.1
7213 ATBP4	65	2.3
7213 B	65	2.1
7213 C	65	2.1
7213 CTBP4	65	2.3
7214 A	70	2.1
7214 ATBP4	70	2.3
7214 B	70	2.1
7214 C	70	2.1
7214 CTBP4	70	2.3
7214.	70	22.1
7215 A	75	2.1
7215 ATBP4	75	2.3
7215 B	75	2.1
7215 C	75	2.1
7215 CTBP4	75	2.3
7215.	75	22.1
7216 A	80	2.1
7216 ATBP4	80	2.3
7216 B	80	2.1
7216 C	80	2.1
7216 CTBP4	80	2.3
7216.	80	22.1
7217 A	85	2.1
7217 ATBP4	85	2.3
7217 B	85	2.1
7217 C	85	2.1
7217 CTBP4	85	2.3
7217.	85	22.1
7218 A	90	2.1
7218 ATBP4	90	2.3

https://nppnovoteh.com

Index	d [mm]	Tab.No
7218 B	90	2.1
7218 C	90	2.1
7218 CTBP4	90	2.3
7218.	90	22.1
72188C/72487	47,625	4.2
7219 A	95	2.1
7219 ATBP4	95	2.3
7219 B	95	2.1
7219 C	95	2.1
7219 CTBP4	95	2.3
7219.	95	22.1
7220 A	100	2.1
7220 ATBP4	100	2.3
7220 B	100	2.1
7220 C	100	2.1
7220 CTBP4	100	2.3
7220.	100	22.1
72200C/72487	50,8	4.2
72201C/72487	50,8	4.2
7221 A	105	2.1
7221 ATBP4	105	2.3
7221 B	105	2.1
7221 C	105	2.1
7221 CTBP4	105	2.3
72212C/72487	53,975	4.2
72218C/72487	55,562	4.2
7222 A	110	2.1
7222 ATBP4	110	2.3
7222 B	110	2.1
7222 C	110	2.1
7222 CTBP4	110	2.3
72225C/72487	57,15	4.2
7224 A	120	2.1
7224 ATBP4	120	2.3
7224 B	120	2.1
7224 C	120	2.1
7224 CTBP4	120	2.3
7224.	120	22.1
7226 A	130	2.1
7226 ATBP4	130	2.3
7226 B	130	2.1
7226 C	130	2.1
7226 CTBP4	130	2.3
7228 A	140	2.1
7228 ATBP4	140	2.3
7228 B	140	2.1
7228 C	140	2.1
7228 CTBP4	140	2.3
7230 A	150	2.1
7230 ATBP4	150	2.3
7230 B	150	2.1
7230 C	150	2.1
7230 CTBP4	150	2.3
7230.	150	22.1
7232 A	160	2.1
7232 ATBP4	160	2.3
7232 B	160	2.1
7232 C	160	2.1
7232 CTBP4	160	2.3
7234 A	170	2.1
7234 ATBP4	170	2.3
7234 B	170	2.1
7234 C	170	2.1
7234 CTBP4	170	2.3
7236 A	180	2.1
7236 ATBP4	180	2.3
7236 B	180	2.1
7236 C	180	2.1
7236 CTBP4	180	2.3
7238 A	190	2.1
7238 ATBP4	190	2.3
7238 B	190	2.1
7238 C	190	2.1
7238 CTBP4	190	2.3
7240 A	200	2.1
7240 ATBP4	200	2.3
7240 B	200	2.1
7240 C	200	2.1
7240 CTBP4	200	2.3
7244 ATBP4	220	2.3
7244 CTBP4	220	2.3
7244.	220	22.1
7254708.	45	22.1
7254709.	50	22.1
727.	135	22.1
7300 A	10	2.1
7301 A	12	2.1
7302 A	15	2.1
7303 A	17	2.1
7303 B	17	2.1
7303 C	17	2.1
7304 A	20	2.1
7304 B	20	2.1
7304 C	20	2.1
7304.	20	22.1
7305 A	25	2.1
7305 B	25	2.1
7305 C	25	2.1
7305.	25	22.1
7306 A	30	2.1
7306 B	30	2.1
7306 C	30	2.1
7306.	30	22.1
7307 A	35	2.1
7307 B	35	2.1
7307 C	35	2.1
7307.	35	22.1
7308 A	40	2.1
7308 B	40	2.1
7308 C	40	2.1
7308.	40	22.1
7309 A	45	2.1
7309 B	45	2.1
7309 C	45	2.1
7309.	45	22.1
7310 A	50	2.1
7310 B	50	2.1
7310 C	50	2.1
7310.	50	22.1
7311 A	55	2.1
7311 B	55	2.1
7311 C	55	2.1
7311.	55	22.1
7312 A	60	2.1
7312 B	60	2.1
7312 C	60	2.1
7312.	60	22.1
7313 A	65	2.1
7313 B	65	2.1
7313 C	65	2.1
7313.	65	22.1
7314 A	70	2.1
7314 B	70	2.1
7314 C	70	2.1
7314.	70	22.1
7315 A	75	2.1
7315 B	75	2.1
7315 C	75	2.1
7315.	75	22.1
7316 A	80	2.1
7316 B	80	2.1
7316 C	80	2.1
7317 A	85	2.1
7317 B	85	2.1
7317 C	85	2.1
7317.	85	22.1
7318 A	90	2.1
7318 B	90	2.1
7318 C	90	2.1
7318.	90	22.1
7319 A	95	2.1
7319 B	95	2.1
7319 C	95	2.1
7319.	95	22.1
7320 A	100	2.1
7320 B	100	2.1
7320 C	100	2.1
7320.	100	22.1
7321 A	105	2.1
7321 B	105	2.1
7321 C	105	2.1
7322 A	110	2.1
7322 B	110	2.1
7322 C	110	2.1
7324 A	120	2.1
7324 B	120	2.1
7324 C	120	2.1
7326 A	130	2.1
7326 B	130	2.1
7326 C	130	2.1
7328 A	140	2.1
7328 B	140	2.1
7328 C	140	2.1
733.	165	22.1
7330 A	150	2.1
7330 B	150	2.1
7330 C	150	2.1
7332 A	160	2.1
7332 B	160	2.1
7332 C	160	2.1
7334 A	170	2.1
7334 B	170	2.1
7334 C	170	2.1
7336 A	180	2.1
7336 B	180	2.1
7338 A	190	2.1
7338 B	190	2.1
7340 A	200	2.1
7340 B	200	2.1
73519.	95	22.1
7352.	260	22.1
73536.	180	22.1
73544.	220	22.1
73551/73875	139,7	4.2
73562/73875	142,875	4.2
73611.	55	22.1
73613.	65	22.1
73615.	75	22.1
73616.	80	22.1
73617.	85	22.1
73619.	95	22.1
73620.	100	22.1
73623.	115	22.1
73630.	150	22.1
73634.	170	22.1
73636.	180	22.1
73644.	220	22.1
73727.	135	22.1
73736.	180	22.1
73930.	150	22.1
740/742	80,962	4.2
740063.	3	22.1
7404 A	20	2.1
7404 B	20	2.1
7405 A	25	2.1
7405 B	25	2.1
7405.	25	22.1
7406 A	30	2.1
7406 B	30	2.1
7406.	30,174	22.1
7407 A	35	2.1
7407 B	35	2.1
7407.	35	22.1
7408 A	40	2.1
7408 B	40	2.1
7409 A	45	2.1
7409 B	45	2.1
7409.	44,461	22.1
7410 A	50	2.1
7410 B	50	2.1
7410.	50,811	22.1
7411 A	55	2.1
7411 B	55	2.1
7412 A	60	2.1
7412 B	60	2.1
7413 A	65	2.1
7413 B	65	2.1
7414 A	70	2.1
7414 B	70	2.1
7415 A	75	2.1
7415 B	75	2.1
7416 A	80	2.1
7416 B	80	2.1
7417 A	85	2.1
7417 B	85	2.1
7418 A	90	2.1
7418 B	90	2.1
744/742	73,025	4.2
74500/74850	127	4.2
74525/74850	133,35	4.2
74537/74850	136,525	4.2
74550/74845	139,7	4.2
74550/74850	139,7	4.2
74550A/74850	139,7	4.2
745A/742	69,85	4.2
747746.	230	22.1
748S/742	76,2	4.2
749/742	85,026	4.2
749A/742	82,55	4.2
749S/742	85,026	4.2
7506.	30	22.1
7507.	35	22.1
7508.	40	22.1
7509.	45	22.1
750A/742	82,55	4.2
7510.	50	22.1
7511.	55	22.1
7512.	60	22.1
7513.	65	22.1
7514.	70	22.1
7515.	75	22.1
7516.	80	22.1
7517.	85	22.1
7518.	90	22.1
7519.	95	22.1
7520.	100	22.1
7522.	110	22.1
7524.	120	22.1
7526.	130	22.1
7528.	140	22.1
7530.	150	22.1
7532.	160	22.1
7536.	180	22.1
753610.	50	22.1
753614.	70	22.1
753619.	95	22.1
7538.	190	22.1
7544.	220	22.1
755/752	76,2	4.2
756A/752	79,375	4.2
757/752	82,55	4.2
758/752	85,725	4.2
759/752	88,9	4.2
760/752	90,488	4.2
7604.	20	22.1
7605.	25	22.1
7606.	30	22.1
7607.	35	22.1
7608.	40	22.1
7609.	45	22.1
7610.	50	22.1
7611.	55	22.1
7612.	60	22.1
7613.	65	22.1
7614.	70	22.1
7615.	75	22.1
7616.	80	22.1
7618.	90	22.1
762/752	73,025	4.2
7620.	100	22.1
7622.	110	22.1
7622.	110	22.1
7624.	120	22.1
7634.	170	22.1
766/752	88,9	4.2
76612.	60	22.1
76692/560.	560	22.1
7669292.	460	22.1
76697/670.	670	22.1
7690906.	30	22.1
77/520.	520	22.1
77/560.	560	22.1
770067.	7	22.1
770068.	8	22.1
7705.	28	22.1
7706.	28	22.1
7707.	33	22.1
7709.	45	22.1
771/560.	500	22.1
771/630.	630	22.1
7710.	50	22.1
7712.	60	22.1
7714.	70	22.1
77168.	340	22.1
77172.	360	22.1
7718.	90	22.1
77184.	420	22.1
77196.	480	22.1
7721.	105	22.1
7723.	115	22.1
7728.	140	22.1
7730.	150	22.1
7736.	180	22.1
77362/77675	92,075	4.2
77375/77675	95,25	4.2
7757.	285	22.1
7760.	300	22.1
776700.	10	22.1
776701.	12	22.1
776702.	12,7	22.1
776800.	10	22.1
776801.	12,7	22.1
776900.	11,6	22.1
777/1000.	1000	22.1
777/533.	533	22.1
777/620.	620	22.1
777/647.	647	22.1
777/650.	650	22.1
777/660.	660	22.1
777/750.	750	22.1
7772.	360	22.1
77741.	205	22.1
77748.	240	22.1
77752.	260	22.1
77760.	300	22.1
77766.	330	22.1
777752.	260	22.1
777770.	350	22.1
77779.	395	22.1
777792.	460	22.1
77788.	440	22.1
77796.	480	22.1
778/520.	520	22.1
778/660.	660	22.1
778/750.	750	22.1
778/772	92,075	4.2
7784.	420	22.1
77856.	280	22.1
77880.	400	22.1
779/600.	600	22.1
77953.	266,7	22.1
77961.	304,675	22.1
77968.	343,052	22.1
77976.	381	22.1
780/772	101,6	4.2
7804.	19,05	22.1
7805.	26	22.1
7806.	32	22.1
7807.	34,938	22.1
7809.	45	22.1
7810.	52,388	22.1
7815.	75	22.1
7818.	90	22.1
782/772	104,775	4.2
7821.	105	22.1
78214C/78551	53,975	4.2
78215C/78551	53,975	4.2
78225/78551	57,15	4.2
78225C/78551	57,15	4.2
7824.	120	22.1
78250/78537	63,5	4.2
78250/78551	63,5	4.2
78255X/78551	64,988	4.2
78255X/78571	64,988	4.2
7828.	140	22.1
7832.	160	22.1
7841.	205	22.1
7851.	255	22.1
786/772	104,775	4.2
7860.	300	22.1
7866.	330	22.1
787/772	104,775	4.2
7876.	380	22.1
7906.	30,238	22.1
7909.	45	22.1
790906.	31	22.1
7915.	75	22.1
7919.	95,25	22.1
7921.	107,95	22.1
7923.	114,3	22.1
7927.	133,35	22.1
7933.	165,125	22.1
7939.	196,85	22.1
7941.	203,225	22.1
7946.	228,63	22.1
7947.	234,95	22.1
795/792	120,65	4.2
7951.	254,025	22.1
7956.	280,228	22.1
797/792	130	4.2
799/792	128,588	4.2
799A/792	130,175	4.2
80017.	7	22.1
80018.	8	22.1
80019.	9	22.1
80023.	3	22.1
80024.	4	22.1
80025.	5	22.1
80026.	6	22.1
80027.	7	22.1
80029.	9	22.1
80064.	4	22.1
80066.	6	22.1
80075.	5	22.1
80089.	9	22.1
80100.	10	22.1
80101.	12	22.1
80102.	15	22.1
80103.	17	22.1
80104.	20	22.1

https://nppnovoteh.com

23. INDEX

Index	d [mm]	Tab.No
80106.	30	22.1
80107.	35	22.1
80108.	40	22.1
80110.	50	22.1
80111.	55	22.1
80112.	60	22.1
80115.	75	22.1
80116.	80	22.1
80118.	90	22.1
80120.	100	22.1
80124.	120	22.1
80170/80217	431,8	4.2
80176/80217	447,675	4.2
80180/80217	457,2	4.2
802.	15	22.1
80200.	10	22.1
80201.	12	22.1
80203.	17	22.1
80204.	20	22.1
80205.	25	22.1
80206.	30	22.1
80207.	35	22.1
80208.	40	22.1
80209.	45	22.1
80211.	55	22.1
80212.	60	22.1
80212.	60	22.1
80213.	65	22.1
80215.	75	22.1
80217.	85	22.1
80218.	90	22.1
80220.	100	22.1
802213.	65	22.1
802218.	90	22.1
80222.	110	22.1
80224.	120	22.1
80226.	130	22.1
80228.	140	22.1
80300.	10	22.1
80304.	20	22.1
80305.	25	22.1
80306.	30	22.1
80307.	35	22.1
80308.	40	22.1
80309.	45	22.1
80310.	50	22.1
80311.	55	22.1
80312.	60	22.1
80313.	65	22.1
80315.	75	22.1
80316.	80	22.1
80317.	85	22.1
80319.	95	22.1
80385/80325	431,8	4.2
804704.	22	22.1
804707.	33,635	22.1
804709.	44,985	22.1
80480/80425	482,6	4.2
804805.	24,985	22.1
80503.	17	22.1
80506.	30	22.1
80701.	12	22.1
807709.	45	22.1
807713.	65	22.1
80780/80720	635	4.2
807813.	65	22.1
807920.	101,6	22.1
80801.	12	22.1
808100.	10	22.1
808106.	30	22.1
808107.	35	22.1
808108.	40	22.1
808205.	25	22.1
808208.	40	22.1
808209.	45	22.1
808211.	55	22.1
808212.	60	22.1
808214.	70	22.1
808216.	80	22.1
808220.	100	22.1
808320.	100	22.1
808903.	18	22.1
80902.	16	22.1
8100.	10	22.1
8101.	12	22.1
8102.	15	22.1
8103.	17	22.1
8104.	20	22.1
8105.	25	22.1
8106.	30	22.1
8107.	35	22.1
8108.	40	22.1
8109.	45	22.1
8110.	50	22.1
81102	15	10.1
81103	17	10.1
81104	20	10.1
81105	25	10.1
81106	30	10.1
81107	35	10.1
81108	40	10.1
81109	45	10.1
8111.	55	22.1
81110	50	10.1
81111	55	10.1
81112	60	10.1
81113	65	10.1
81114	70	10.1
81115	75	10.1
81116	80	10.1
81117	85	10.1
81118	90	10.1
8112.	60	22.1
81120	100	10.1
81122	110	10.1
81124	120	10.1
81126	130	10.1
81128	140	10.1
8113.	65	22.1
81130	150	10.1
81132	160	10.1
81134	170	10.1
81136	180	10.1
81138	190	10.1
8114.	70	22.1
81140	200	10.1
81144	220	10.1
81148	240	10.1
8115.	75	22.1
81152	260	10.1
81156	280	10.1
8116.	80	22.1
81160	300	10.1
81164	320	10.1
81168	340	10.1
8117.	85	22.1
81172	360	10.1
81176	380	10.1
8118.	90	22.1
81180	400	10.1
81184	420	10.1
81188	440	10.1
81192	460	10.1
81196	480	10.1
8120.	100	22.1
81206	30	10.1
81207	35	10.1
81208	40	10.1
81209	45	10.1
81210	50	10.1
81211	55	10.1
81212	60	10.1
81213	65	10.1
81214	70	10.1
81215	75	10.1
81216	80	10.1
81217	85	10.1
81218	90	10.1
8122.	110	22.1
81220	100	10.1
81222	110	10.1
81224	120	10.1
81226	130	10.1
81228	140	10.1
81230	150	10.1
81232	160	10.1
81234	170	10.1
81236	180	10.1
81238	190	10.1
8124.	120	22.1
81240	200	10.1
81244	220	10.1
81248	240	10.1
81252	260	10.1
81256	280	10.1
8126.	130	22.1
81260	300	10.1
81264	320	10.1
81268	340	10.1
81276	380	10.1
8128.	140	22.1
81280	400	10.1
81284	420	10.1
81288	440	10.1
81292	460	10.1
81296	480	10.1
8130.	150	22.1
8132.	160	22.1
8134.	170	22.1
8136.	180	22.1
8140.	200	22.1
8144.	220	22.1
8148.	240	22.1
81506.	30	22.1
8152.	260	22.1
8156.	280	22.1
8164.	320	22.1
8168.	340	22.1
8172.	360	22.1
8180.	400	22.1
8201.	12	22.1
8202.	15	22.1
8204.	20	22.1
8205.	25	22.1
8206.	30	22.1
8207.	35	22.1
8208.	40	22.1
8209.	45	22.1
8210.	50	22.1
8211.	55	22.1
8212.	60	22.1
8213.	65	22.1
8214.	70	22.1
8215.	75	22.1
8216.	80	22.1
8217.	85	22.1
8218.	90	22.1
8220.	100	22.1
8222.	110	22.1
8224.	120	22.1
8226.	130	22.1
8228.	140	22.1
822907.	36,4	22.1
8230.	150	22.1
8236.	180	22.1
8240.	200	22.1
8244.	220	22.1
8256.	280	22.1
82576/82931	146,05	4.2
82576/82950	146,05	4.2
8260.	300	22.1
8268.	340	22.1
82680X/83620	177,8	4.2
8272.	360	22.1
8292.	460	22.1
8296.	480	22.1
8305.	25	22.1
8306.	30	22.1
8307.	35	22.1
8308.	40	22.1
8309.	45	22.1
8310.	50	22.1
8311.	55	22.1
8312.	60	22.1
8313.	65	22.1
8314.	70	22.1
8315.	75	22.1
8316.	80	22.1
8318.	90	22.1
8320.	100	22.1
8322.	110	22.1
8324.	120	22.1
8326.	130	22.1
8330.	150	22.1
8336.	180	22.1
8340.	200	22.1
835/832	69,85	4.2
836108.	40	22.1
836113.	65	22.1
836115.	75	22.1
836126.	130	22.1
836204.	20	22.1
836216.	80	22.1
8368.	340	22.1
836804.	19,1	22.1
836906.	28	22.1
840.	201	22.1
840025.	5	22.1
840076.	6	22.1
841/832	85,725	4.2
84115/84155	292,1	4.2
8413.	65	22.1
842/832	82,55	4.2
8420.	100	22.1
8426.	130	22.1
843/832	76,2	4.2
846109.	45	22.1
846115.	75	22.1
846118.	90	22.1
846122.	110	22.1
846124.	120	22.1
8471/560.	560	22.1
8471/900.	900	22.1
847156.	280	22.1
847164.	320	22.1
847180.	400	22.1
8477/710.	710	22.1
8477/750.	750	22.1
847792.	460	22.1
847929.	146,075	22.1
847951.	254,025	22.1
848208.	40	22.1
848311.	55	22.1
850/832	88,9	4.2
855/854	88,9	4.2
857/854	92,075	4.2
8573/8520	228,6	4.2
8575/8520	234,95	4.2
8578/8520	241,3	4.2
86.	6	22.1
861/854	101,6	4.2
864/854	95,25	4.2
864909.	47	22.1
86650/86100	165,1	4.2
86669/86100	170	4.2
8717.	85	22.1
8726.	130	22.1
8760.	300	22.1
8768.	340	22.1
87737/87111	187,325	4.2
87750/87111	190,5	4.2
87762/87111	193,675	4.2
8791.	455	22.1
88900/88126	228,6	4.2
88900/88128	228,6	4.2
88925/88126	234,95	4.2
88925/88128	234,95	4.2
889752.	260	22.1
889764.	320	22.1
889852.	260	22.1
89.	9	22.1
8903.	17,5	22.1
8908.	42	22.1
89306	30	10.1
89307	35	10.1
89308	40	10.1
89309	45	10.1
89310	50	10.1
89311	55	10.1
89312	60	10.1
89313	65	10.1
89314	70	10.1
89315	75	10.1
89316	80	10.1
89317	85	10.1
89318	90	10.1
89320	100	10.1
89322	110	10.1
89324	120	10.1
89326	130	10.1
89328	140	10.1
89330	150	10.1
89412	60	10.1
89413	65	10.1
89414	70	10.1
89415	75	10.1
89416	80	10.1
89417	85	10.1
89418	90	10.1
89420	100	10.1
89422	110	10.1
89424	120	10.1
89426	130	10.1
89428	140	10.1
89430	150	10.1
89432	160	10.1
89434	170	10.1
89436	180	10.1
89438	190	10.1
89440	200	10.1
89444	220	10.1
89448	240	10.1
89452	260	10.1
89456	280	10.1
89460	300	10.1
89464	320	10.1
8948.	238	22.1
896/892	136,525	4.2
897720.	100	22.1
898/892	139,7	4.2
898A/892	139,7	4.2
900705.	25	22.1
900706.	30	22.1
900803.	17	22.1
900805.	25	22.1
900904.	22	22.1
900907.	34	22.1
9009422.	110	22.1
9009440.	200	22.1
9009580.	400	22.1
9019424.	120	22.1
9019436.	180	22.1
9019452.	260	22.1
9019464.	320	22.1
9019476.	380	22.1
903.	17,7	22.1
90334/90744	85	4.2
90381/90744	96,838	4.2
9039280.	400	22.1
9039352.	260	22.1
9039364.	320	22.1
9039388.	440	22.1
90394/500.	500	22.1
90394/710.	710	22.1
9039412.	60	22.1
9039414.	70	22.1
9039416.	80	22.1
9039417.	85	22.1
9039420.	100	22.1
9039428.	140	22.1
9039434.	170	22.1
9039436.	180	22.1
9039452.	260	22.1
9039488.	440	22.1
904700.	10,005	22.1
904900.	10	22.1
904902.	14,723	22.1
906.	32	22.1
9102.	15	22.1
9103.	17	22.1
9107.	35	22.1
9108.	40	22.1
9110.	50	22.1
9115.	75	22.1
9130.	150	22.1
9185/9121	68,262	4.2
9206.	30	22.1
9207.	35	22.1
9209.	45	22.1
9212.	60	22.1
92124.	120	22.1
92140.	200	22.1
9215.	75	22.1
92152.	260	22.1
92205.	25	22.1
92206.	30	22.1
92207.	35	22.1
92217.	85	22.1
92218.	90	22.1
92220.	100	22.1
922205.	25	22.1
92222.	110	22.1
92224.	120	22.1
92230.	150	22.1
922906.	31,793	22.1
9230.	150	22.1
92305.	25	22.1
92311.	55	22.1
92312.	60	22.1
92313.	65	22.1
92314.	70	22.1
92317.	85	22.1
9232.	160	22.1
92328.	140	22.1
9236.	180	22.1
9238.	190	22.1
9240.	200	22.1
92410.	50	22.1
92412.	60	22.1

https://nppnovoteh.com

Index	d [mm]	Tab.No
92417.	85	22.1
92426.	130	22.1
9248.	240	22.1
92512.	60	22.1
92513.	65	22.1
92514.	70	22.1
92517.	85	22.1
9260.	300	22.1
92609.	45	22.1
92610.	50	22.1
92613.	65	22.1
92614.	70	22.1
92615.	75	22.1
92616.	80	22.1
92705.	25	22.1
92708.	40	22.1
9278/9220	68,262	4.2
9285/9220	76,2	4.2
936/932	107,95	4.2
93708/93125	179,975	4.2
93750/93125	190,5	4.2
9378/9321	76,2	4.2
93787/93125	200,025	4.2
938/932	114,3	4.2
9380/9321	76,2	4.2
93800/93125	203,2	4.2
93825/93125	209,55	4.2
9385/9321	84,138	4.2
9386H/9320	84,138	4.2
94056.	6,35	22.1
940705.	25	22.1
941/932	101,6	4.2
942/8.	8	22.1
943/7.	7	22.1
94649/94113	165,1	4.2
94687/94113	174,625	4.2
94700/94113	177,8	4.2
94708.	40	22.1
948066.	6	22.1
948102.	15,3	22.1
948103.	17,3	22.1
94908.	38,1	22.1
950118.	90	22.1
950119.	95	22.1
950120.	100	22.1
950138.	190	22.1
950218.	90	22.1
953613.	65	22.1
95475/95925	120,65	4.2
95500/95905	127	4.2
95500/95925	127	4.2
95525/95925	133,35	4.2
95528/95925	133,35	4.2
958305.	25	22.1
958705.	25	22.1
9588217.	85	22.1
9588218.	90	22.1
958911.	54	22.1
96605.	25	22.1
968.	340	22.1
96900/96140	228,6	4.2
96925/96140	234,95	4.2
969961.	305	22.1
971/500.	500	22.1
971/560.	560	22.1
971/600.	600	22.1
971/710.	710	22.1
971/800.	800	22.1
97168.	340	22.1
97172.	360	22.1
97180.	400	22.1
97184.	420	22.1
97188.	440	22.1
97192.	460	22.1
97212.	60	22.1
97218.	90	22.1
97500/97900	127	4.2
97506.	30	22.1
97507.	35	22.1
97508.	40	22.1
97509.	45	22.1
97510.	50	22.1
97511.	55	22.1
97512.	60	22.1
97514.	70	22.1
97515.	75	22.1
97516.	80	22.1
97518.	90	22.1
97519.	95	22.1
97520.	100	22.1

Index	d [mm]	Tab.No
97521.	105	22.1
97524.	120	22.1
97526.	130	22.1
97530.	150	22.1
977/520.	520	22.1
977/540.	540	22.1
977/560.	560	22.1
977/720.	720	22.1
977/725.	725	22.1
97718.	90	22.1
97720.	100	22.1
97724.	120	22.1
97726.	130	22.1
97727.	135	22.1
97730.	150	22.1
97732.	160	22.1
97736.	180	22.1
97741.	205	22.1
97744.	220	22.1
97745.	225	22.1
97746.	230	22.1
97748.	240	22.1
97752.	260	22.1
97766.	330	22.1
97768.	340	22.1
97770.	350	22.1
97772.	360	22.1
97773.	365	22.1
977760.	300	22.1
97780.	400	22.1
97784.	420	22.1
97798.	490	22.1
97814.	70	22.1
97820.	101	22.1
97825.	127	22.1
97830.	150	22.1
97841.	205	22.1
97852.	260	22.1
97860.	300	22.1
97918.	90	22.1
97919.	95	22.1
97920.	100	22.1
97925.	127,025	22.1
97927.	133,375	22.1
97928.	136,545	22.1
97930.	152,4	22.1
97931.	152,425	22.1
97944.	220	22.1
980055.	5	22.1
980065.	5	22.1
980067.	7	22.1
980077.	7	22.1
980079.	9	22.1
980085.	5	22.1
980700.	10	22.1
980704.	20	22.1
980705.	25	22.1
980800.	10	22.1
980805.	25	22.1
980912.	58	22.1
9809352.	260	22.1
98206.	30,1	22.1
98316.	80	22.1
98316/98788	80	4.2
98335/98788	85	4.2
98350/98788	88,9	4.2
98400/98788	101,6	4.2
986711.	55	22.1
986714.	70	22.1
986811.	55	22.1
9889322.	110	22.1
9889468.	340	22.1
9889492.	460	22.1
994706.	30	22.1
994713.	65	22.1
99550/99100	139,7	4.2
99575/99100	146,05	4.2
99600/99100	152,4	4.2
998911.	53	22.1
998912.	57	22.1
998916.	78	22.1
998920.	101	22.1
AH208	35	18.1
AH209	40	18.1
AH210	45	18.1
AH211	50	18.1
AH212	55	18.1
AH213	60	18.1
AH214	65	18.1
AH215	70	18.1

Index	d [mm]	Tab.No
AH216	75	18.1
AH217	80	18.1
AH218	85	18.1
AH219	90	18.1
AH220	95	18.1
AH222	105	18.1
AH2236	170	18.1
AH2238	180	18.1
AH224	115	18.1
AH2240	190	18.1
AH2244	200	18.1
AH2248	220	18.1
AH2252	240	18.1
AH2256	260	18.1
AH226	125	18.1
AH2260	280	18.1
AH2264	300	18.1
AH228	135	18.1
AH230	145	18.1
AH2308	35	18.1
AH2309	40	18.1
AH2313	60	18.1
AH232	150	18.1
AH2332	150	18.1
AH2334	160	18.1
AH2336	170	18.1
AH2338	180	18.1
AH234	160	18.1
AH2340	190	18.1
AH2344	200	18.1
AH2348	220	18.1
AH2352	240	18.1
AH2356	260	18.1
AH236	170	18.1
AH238	180	18.1
AH240	190	18.1
AH240/1000	950	18.1
AH240/1060	1000	18.1
AH240/1120	1060	18.1
AH240/1180	1120	18.1
AH240/1250	1180	18.1
AH240/1320	1250	18.1
AH240/1400	1320	18.1
AH240/500	480	18.1
AH240/530	500	18.1
AH240/560	530	18.1
AH240/600	570	18.1
AH240/630	600	18.1
AH240/670	630	18.1
AH240/710	670	18.1
AH240/750	710	18.1
AH240/800	750	18.1
AH240/850	800	18.1
AH240/900	850	18.1
AH240/950	850	18.1
AH24020	95	18.1
AH24022	105	18.1
AH24024	115	18.1
AH24026	125	18.1
AH24028	135	18.1
AH24030	145	18.1
AH24032	150	18.1
AH24034	160	18.1
AH24036	170	18.1
AH24038	180	18.1
AH24040	190	18.1
AH24044	200	18.1
AH24048	220	18.1
AH24052	240	18.1
AH24056	260	18.1
AH24060	280	18.1
AH24064	300	18.1
AH24068	320	18.1
AH24072	340	18.1
AH24076	360	18.1
AH24080	380	18.1
AH24084	400	18.1
AH24088	420	18.1
AH24092	440	18.1
AH24096	460	18.1
AH241/1000	950	18.1
AH241/1060	1000	18.1
AH241/1120	1060	18.1
AH241/500	480	18.1
AH241/530	500	18.1
AH241/560	530	18.1
AH241/600	570	18.1
AH241/630	600	18.1
AH241/670	630	18.1
AH241/710	670	18.1

Index	d [mm]	Tab.No
AH241/750	710	18.1
AH241/800	750	18.1
AH241/850	800	18.1
AH241/900	850	18.1
AH241/950	850	18.1
AH24120	95	18.1
AH24122	105	18.1
AH24124	115	18.1
AH24126	125	18.1
AH24128	135	18.1
AH24130	145	18.1
AH24132	150	18.1
AH24134	160	18.1
AH24136	170	18.1
AH24138	180	18.1
AH24140	190	18.1
AH24144	200	18.1
AH24148	220	18.1
AH24152	240	18.1
AH24156	260	18.1
AH24160	280	18.1
AH24164	300	18.1
AH24168	320	18.1
AH24172	340	18.1
AH24176	360	18.1
AH24180	380	18.1
AH24184	400	18.1
AH24188	420	18.1
AH24192	440	18.1
AH24196	460	18.1
AH244	200	18.1
AH248	220	18.1
AH252	240	18.1
AH256	260	18.1
AH30/630	600	18.1
AH30/670	630	18.1
AH30/710	670	18.1
AH30/800	750	18.1
AH3032	150	18.1
AH3034	160	18.1
AH3036	170	18.1
AH3038	180	18.1
AH3040	190	18.1
AH3044	200	18.1
AH3048	220	18.1
AH3052	240	18.1
AH3056	260	18.1
AH3060	280	18.1
AH3064	300	18.1
AH3068	320	18.1
AH3072	340	18.1
AH3076	360	18.1
AH308	35	18.1
AH3080	380	18.1
AH3084	400	18.1
AH309	40	18.1
AH31/1000	950	18.1
AH31/630	600	18.1
AH31/750	710	18.1
AH31/800	750	18.1
AH313	60	18.1
AH3132	150	18.1
AH3134	160	18.1
AH3136	170	18.1
AH3138	180	18.1
AH314	65	18.1
AH3140	190	18.1
AH3144	200	18.1
AH3148	220	18.1
AH315	70	18.1
AH3152	240	18.1
AH3156	260	18.1
AH316	75	18.1
AH3160	280	18.1
AH3164	300	18.1
AH3168	320	18.1
AH3172	340	18.1
AH3176	360	18.1
AH3180	380	18.1
AH3184	400	18.1
AH32/630	600	18.1
AH32/670	630	18.1
AH32/710	670	18.1
AH32/800	750	18.1
AH3217	80	18.1
AH3232	150	18.1
AH3234	160	18.1
AH3236	170	18.1
AH3238	180	18.1
AH3240	190	18.1

Index	d [mm]	Tab.No
AH3260	280	18.1
AH3264	300	18.1
AH3268	320	18.1
AH3272	340	18.1
AH3276	360	18.1
AH3280	380	18.1
AH3284	400	18.1
AH3288	420	18.1
AH3292	440	18.1
AH3296	460	18.1
AH3308	35	18.1
AH3309	40	18.1
AH3310	45	18.1
AH3311	50	18.1
AH3312	55	18.1
AH3313	60	18.1
AH3314	65	18.1
AH3315	70	18.1
AH3316	75	18.1
AH3317	80	18.1
AH3318	85	18.1
AH3319	90	18.1
AH332	150	18.1
AH3320	95	18.1
AH3322	105	18.1
AH3324	115	18.1
AH3326	125	18.1
AH3328	135	18.1
AH3330	145	18.1
AH3332	150	18.1
AH3334	160	18.1
AH3336	170	18.1
AH3338	180	18.1
AH334	160	18.1
AH3340	190	18.1
AH38/710	680	18.1
AH38/900	860	18.1
AH3834	160	18.1
AH3836	170	18.1
AH3838	180	18.1
AH3840	190	18.1
AH39/1000	950	18.1
AH39/1060	1000	18.1
AH39/1120	1070	18.1
AH39/1180	1130	18.1
AH39/1250	1200	18.1
AH39/1320	1270	18.1
AH39/1400	1350	18.1
AH39/1500	1450	18.1
AH39/500	480	18.1
AH39/530	500	18.1
AH39/560	530	18.1
AH39/600	570	18.1
AH39/630	600	18.1
AH39/670	630	18.1
AH39/710	670	18.1
AH39/750	710	18.1
AH39/800	750	18.1
AH39/850	800	18.1
AH39/900	850	18.1
AH39/950	900	18.1
AH3936	170	18.1
AH3938	180	18.1
AH3940	190	18.1
AH3944	200	18.1
AH3948	220	18.1
AH3952	240	18.1
AH3956	260	18.1
AH3960	280	18.1
AH3964	300	18.1
AH3968	320	18.1
AH3972	340	18.1
AH3976	360	18.1
AH3980	380	18.1
AH3984	400	18.1
AH3992	440	18.1
AH3996	460	18.1
AHX2310	45	18.1
AHX2311	50	18.1
AHX2312	55	18.1
AHX2314	65	18.1
AHX2315	70	18.1
AHX2316	75	18.1
AHX2317	80	18.1
AHX2318	85	18.1
AHX2319	90	18.1
AHX2320	95	18.1
AHX2322	105	18.1
AHX2324	115	18.1
AHX2326	125	18.1

https://nppnovoteh.com

23. INDEX

Index	d [mm]	Tab.No
AHX2328	135	18.1
AHX2330	145	18.1
AHX30/500	480	18.1
AHX30/530	500	18.1
AHX30/560	530	18.1
AHX30/600	570	18.1
AHX3024	115	18.1
AHX3026	125	18.1
AHX3028	135	18.1
AHX3030	145	18.1
AHX3088	420	18.1
AHX3092	440	18.1
AHX3096	460	18.1
AHX31/500	480	18.1
AHX31/560	530	18.1
AHX31/600	570	18.1
AHX310	45	18.1
AHX311	50	18.1
AHX312	55	18.1
AHX3120	95	18.1
AHX3122	105	18.1
AHX3124	115	18.1
AHX3126	125	18.1
AHX3128	135	18.1
AHX3130	145	18.1
AHX317	80	18.1
AHX318	85	18.1
AHX3188	420	18.1
AHX319	90	18.1
AHX3192	440	18.1
AHX3196	460	18.1
AHX32/500	480	18.1
AHX32/530	500	18.1
AHX32/560	530	18.1
AHX32/600	570	18.1
AHX320	95	18.1
AHX3218	85	18.1
AHX3219	90	18.1
AHX322	105	18.1
AHX3220	95	18.1
AHX3222	105	18.1
AHX3224	115	18.1
AHX3226	125	18.1
AHX3228	135	18.1
AHX3230	145	18.1
AHX324	115	18.1
AHX326	125	18.1
AHX328	135	18.1
AHX330	145	18.1
AS0414	4	11.1
AS0515	5	11.1
AS0619	6	11.1
AS0821	8	11.1
AS100135	100	11.1
AS1024	10	11.1
AS110145	110	11.1
AS120155	120	11.1
AS1226	12	11.1
AS130170	130	11.1
AS140180	140	11.1
AS150190	150	11.1
AS1528	15	11.1
AS160200	160	11.1
AS1730	17	11.1
AS2035	20	11.1
AS2542	25	11.1
AS3047	30	11.1
AS3552	35	11.1
AS4060	40	11.1
AS4565	45	11.1
AS5070	50	11.1
AS5578	55	11.1
AS6085	60	11.1
AS6590	65	11.1
AS7095	70	11.1
AS75100	75	11.1
AS80105	80	11.1
AS85110	85	11.1
AS90120	90	11.1
AXK 0414	4	11.1
AXK 0515	5	11.1
AXK 0619	6	11.1
AXK 0821	8	11.1
AXK 100135	100	11.1
AXK 1024	10	11.1
AXK 110145	110	11.1
AXK 120155	120	11.1
AXK 1226	12	11.1
AXK 130170	130	11.1
AXK 140180	140	11.1

Index	d [mm]	Tab.No
AXK 150190	150	11.1
AXK 1528	15	11.1
AXK 160200	160	11.1
AXK 1730	17	11.1
AXK 2035	20	11.1
AXK 2542	25	11.1
AXK 3047	30	11.1
AXK 3552	35	11.1
AXK 4060	40	11.1
AXK 4565	45	11.1
AXK 5070	50	11.1
AXK 5578	55	11.1
AXK 6085	60	11.1
AXK 6590	65	11.1
AXK 7095	70	11.1
AXK 75100	75	11.1
AXK 80105	80	11.1
AXK 85110	85	11.1
AXK 90120	90	11.1
BC25520020,6.	25	21.1
BC25520037.	25	21.1
BC25520043.	25	21.1
BC25550043.	25	21.1
BC25560032.	25	21.1
BC27600050.	27	21.1
BC28610042.	28	21.1
BC30600037.	30	21.1
BC30600037.	30	21.1
BC30600337.	30	21.1
BC30600337.	30	21.1
BC30600337.	30	21.1
BC34620037.	34	21.1
BC34640037.	34	21.1
BC34640037.	34	21.1
BC34660037.	34	21.1
BC35640037.	35	21.1
BC35650035.	35	21.1
BC35660032.	35	21.1
BC35660033.	35	21.1
BC35660037.	35	21.1
BC35680037.	35	21.1
BC35680037.	35	21.1
BC35680233/30.	35	21.1
BC35720028.	35	21.1
BC35720033.	35	21.1
BC35720034.	35	21.1
BC35720433.	35	21.1
BC37720037.	37	21.1
BC37720437.	37	21.1
BC37740045.	37	21.1
BC38700038.	38	21.1
BC38710233/30.	38	21.1
BC38720040.	38	21.1
BC38720236/33.	38	21.1
BC38730040.	38	21.1
BC38740030.	38	21.1
BC38740050.	38	21.1
BC38740236/33.	38	21.1
BC39/41750037.	39/41	21.1
BC39680037.	39	21.1
BC39680037.	39	21.1
BC39720037.	39	21.1
BC39740039.	39	21.1
BC40720036/33.	40	21.1
BC40720037.	40	21.1
BC40740036/34.	40	21.1
BC40740040.	40	21.1
BC40750037.	40	21.1
BC40760041/38.	40	21.1
BC40800031.	40	21.1
BC40800036.	40	21.1
BC40800036/34.	40	21.1
BC408402538.	40	21.1
BC42750037.	42	21.1
BC4276003835.	42	21.1
BC428000342.	42	21.1
BC42800037.	42	21.1
BC42800042.	42	21.1
BC42800342.	42	21.1
BC42820036.	42	21.1
BC42820037.	42	21.1
BC42840039.	42	21.1
BC43/45820037.	43/45	21.1
BC43800038.	43	21.1
BC43820045.	43	21.1
BC45750023.	45	21.1
BC45800045.	45	21.1
BC45840039.	45	21.1
BK0408	4	6.2
BK0409	4	6.2

Index	d [mm]	Tab.No
BK0508	5	6.2
BK0509	5	6.2
BK0607	6	6.2
BK0608	6	6.2
BK0609	6	6.2
BK0610	6	6.2
BK0611	6	6.2
BK0708	7	6.2
BK0709	7	6.2
BK0710	7	6.2
BK0712	7	6.2
BK071208	7	6.2
BK0808	8	6.2
BK0809	8	6.2
BK0810	8	6.2
BK0812	8	6.2
BK081410	8	6.2
BK081412	8	6.2
BK081414	8	6.2
BK0815	8	6.2
BK081512	8	6.2
BK0908	9	6.2
BK0909	9	6.2
BK0910	9	6.2
BK0912	9	6.2
BK0914	9	6.2
BK091510	9	6.2
BK091512	9	6.2
BK091513	9	6.2
BK091514	9	6.2
BK091516	9	6.2
BK1008	10	6.2
BK1009	10	6.2
BK1010	10	6.2
BK1012	10	6.2
BK1014	10	6.2
BK1015	10	6.2
BK101610	10	6.2
BK101612	10	6.2
BK101614	10	6.2
BK101615	10	6.2
BK101616	10	6.2
BK1208	12	6.2
BK1209	12	6.2
BK1210	12	6.2
BK1212	12	6.2
BK1214	12	6.2
BK1216	12	6.2
BK121712	12	6.2
BK121718	12	6.2
BK121810	12	6.2
BK121812	12	6.2
BK121814	12	6.2
BK121816	12	6.2
BK121818	12	6.2
BK1410	14	6.2
BK1412	14	6.2
BK1414	14	6.2
BK1416	14	6.2
BK1418	14	6.2
BK1420	14	6.2
BK142212	14	6.2
BK142214	14	6.2
BK142216	14	6.2
BK142218	14	6.2
BK142220	14	6.2
BK1510	15	6.2
BK1512	15	6.2
BK1514	15	6.2
BK1516	15	6.2
BK1518	15	6.2
BK1520	15	6.2
BK152012	15	6.2
BK152016	15	6.2
BK152020	15	6.2
BK152212	15	6.2
BK152312	15	6.2
BK152314	15	6.2
BK152316	15	6.2
BK152318	15	6.2
BK152320	15	6.2
BK1610	16	6.2
BK1612	16	6.2
BK1614	16	6.2
BK1616	16	6.2
BK1618	16	6.2
BK1620	16	6.2
BK162109	16	6.2
BK162412	16	6.2
BK162414	16	6.2

Index	d [mm]	Tab.No
BK162416	16	6.2
BK162418	16	6.2
BK162420	16	6.2
BK1710	17	6.2
BK1712	17	6.2
BK1714	17	6.2
BK1716	17	6.2
BK1718	17	6.2
BK1720	17	6.2
BK1722	17	6.2
BK172512	17	6.2
BK172514	17	6.2
BK172516	17	6.2
BK172518	17	6.2
BK172520	17	6.2
BK1810	18	6.2
BK1812	18	6.2
BK1814	18	6.2
BK1816	18	6.2
BK1818	18	6.2
BK1820	18	6.2
BK182612	18	6.2
BK182614	18	6.2
BK182616	18	6.2
BK182618	18	6.2
BK182620	18	6.2
BK2010	20	6.2
BK2012	20	6.2
BK2014	20	6.2
BK2016	20	6.2
BK2018	20	6.2
BK2020	20	6.2
BK2025	20	6.2
BK202812	20	6.2
BK202814	20	6.2
BK202816	20	6.2
BK202818	20	6.2
BK202820	20	6.2
BK202918	20	6.2
BK2210	22	6.2
BK2212	22	6.2
BK2214	22	6.2
BK2216	22	6.2
BK2218	22	6.2
BK2220	22	6.2
BK223012	22	6.2
BK223014	22	6.2
BK223016	22	6.2
BK223018	22	6.2
BK223020	22	6.2
BK2508	25	6.2
BK2512	25	6.2
BK2514	25	6.2
BK2516	25	6.2
BK2518	25	6.2
BK2520	25	6.2
BK2522	25	6.2
BK2524	25	6.2
BK253315	25	6.2
BK253514	25	6.2
BK253516	25	6.2
BK253518	25	6.2
BK253520	25	6.2
BK253524	25	6.2
BK2812	28	6.2
BK2814	28	6.2
BK2816	28	6.2
BK2818	28	6.2
BK2820	28	6.2
BK2824	28	6.2
BK283814	28	6.2
BK283816	28	6.2
BK283818	28	6.2
BK283820	28	6.2
BK283824	28	6.2
BK3012	30	6.2
BK3014	30	6.2
BK3016	30	6.2
BK3018	30	6.2
BK3020	30	6.2
BK3024	30	6.2
BK3038	30	6.2
BK303824	30	6.2
BK303832	30	6.2
BK304014	30	6.2
BK304016	30	6.2
BK304018	30	6.2
BK304020	30	6.2
BK304024	30	6.2
BK3212	32	6.2

Index	d [mm]	Tab.No
BK3214	35	6.2
BK3216	35	6.2
BK3218	35	6.2
BK3220	35	6.2
BK3224	35	6.2
BK324214	35	6.2
BK324216	35	6.2
BK324218	35	6.2
BK324220	35	6.2
BK324224	35	6.2
BK3512	35	6.2
BK3514	35	6.2
BK3516	35	6.2
BK3518	35	6.2
BK3520	35	6.2
BK3524	35	6.2
BK354332	35	6.2
BK354514	35	6.2
BK354516	35	6.2
BK354518	35	6.2
BK354520	35	6.2
BK354524	35	6.2
BK3812	38	6.2
BK3814	38	6.2
BK3816	38	6.2
BK3818	38	6.2
BK3820	38	6.2
BK3824	38	6.2
BK384814	38	6.2
BK384816	38	6.2
BK384818	38	6.2
BK384820	38	6.2
BK384824	38	6.2
BK4012	40	6.2
BK4014	40	6.2
BK4016	40	6.2
BK4018	40	6.2
BK4020	40	6.2
BK4024	40	6.2
BK405014	40	6.2
BK405016	40	6.2
BK405018	40	6.2
BK405020	40	6.2
BK405024	40	6.2
BK4212	42	6.2
BK4214	42	6.2
BK4216	42	6.2
BK4218	42	6.2
BK4220	42	6.2
BK4224	42	6.2
BK425214	42	6.2
BK425216	42	6.2
BK425218	42	6.2
BK425220	42	6.2
BK425224	42	6.2
BK4512	45	6.2
BK4514	45	6.2
BK4516	45	6.2
BK4518	45	6.2
BK4520	45	6.2
BK4524	45	6.2
BK455514	45	6.2
BK455516	45	6.2
BK455518	45	6.2
BK455520	45	6.2
BK455524	45	6.2
BK455538	45	6.2
BK5016	50	6.2
BK5018	50	6.2
BK5020	50	6.2
BK5024	50	6.2
BK5025	50	6.2
BK506038	50	6.2
BK5516	55	6.2
BK5518	55	6.2
BK5520	55	6.2
BK5524	55	6.2
BK6016	60	6.2
BK6018	60	6.2
BK6020	60	6.2
BK6024	60	6.2
BK6516	65	6.2
BK6518	65	6.2
BK6520	65	6.2
BK6524	65	6.2
BK7016	70	6.2
BK7018	70	6.2
BK7020	70	6.2
BK7024	70	6.2
Bo15	15	1.5

Index	d [mm]	Tab.No
Bo17	17	1.5
E10	10	1.5
E11	11	1.5
E12	12	1.5
E13	13	1.5
E15	15	1.5
E17	17	1.5
E19	19	1.5
E20	20	1.5
E3	3	1.5
E4	4	1.5
E5	5	1.5
E6	6	1.5
E7	7	1.5
E8	8	1.5
E9	9	1.5
FD201	12	14.3
FD202	15	14.3
FD203	17	14.3
FD204	20	14.3
FD205	25	14.3
FD206	30	14.3
FD207	35	14.3
FD208	40	14.3
FD209	45	14.3
FD210	50	14.3
FD211	55	14.3
FD212	60	14.3
FL60/1,5	1,5	1.1
FL60/1,5 ZZ	1,5	1.1
FL60/2,5	2,5	1.1
FL60/2,5 ZZ	2,5	1.1
FL602	2	1.1
FL602 ZZ	2	1.1
FL603	3	1.1
FL603 ZZ	3	1.1
FL604	4	1.1
FL604 ZZ	4	1.1
FL605	5	1.1
FL605 ZZ	5	1.1
FL606	6	1.1
FL606 ZZ	6	1.1
FL608	8	1.1
FL608 ZZ	8	1.1
FL617/3	3	1.1
FL617/3 ZZ	3	1.1
FL617/4	4	1.1
FL617/4 ZZ	4	1.1
FL617/5	5	1.1
FL617/5 ZZ	5	1.1
FL617/6	6	1.1
FL617/6 ZZ	6	1.1
FL617/7	7	1.1
FL617/7 ZZ	7	1.1
FL617/8	8	1.1
FL617/8 ZZ	8	1.1
FL618/1	1	1.1
FL618/1 ZZ	1	1.1
FL618/1,5	1,5	1.1
FL618/1,5 ZZ	1,5	1.1
FL618/2	2	1.1
FL618/2 ZZ	2	1.1
FL618/2,5	2,5	1.1
FL618/2,5 ZZ	2,5	1.1
FL618/3	3	1.1
FL618/3 ZZ	3	1.1
FL618/4	4	1.1
FL618/4 ZZ	4	1.1
FL618/5	5	1.1
FL618/5 ZZ	5	1.1
FL618/6	6	1.1
FL618/6 ZZ	6	1.1
FL618/7	7	1.1
FL618/7 ZZ	7	1.1
FL618/8	8	1.1
FL618/8 ZZ	8	1.1
FL618/9	9	1.1
FL618/9 ZZ	9	1.1
FL619/1	1	1.1
FL619/1 ZZ	1	1.1
FL619/1,5	1,5	1.1
FL619/1,5 ZZ	1,5	1.1
FL619/2	2	1.1
FL619/2 ZZ	2	1.1
FL619/2,5	2,5	1.1
FL619/2,5 ZZ	2,5	1.1
FL619/3	3	1.1
FL619/3 ZZ	3	1.1
FL619/4	4	1.1
FL619/4 ZZ	4	1.1
FL619/5	5	1.1
FL619/5 ZZ	5	1.1
FL619/6	6	1.1
FL619/6 ZZ	6	1.1
FL619/7	7	1.1
FL619/7 ZZ	7	1.1
FL619/8	8	1.1
FL619/8 ZZ	8	1.1
FL619/9	9	1.1
FL619/9 ZZ	9	1.1
FL623	3	1.1
FL623 ZZ	3	1.1
FL624	4	1.1
FL624 ZZ	4	1.1
FL625	5	1.1
FL625 ZZ	5	1.1
FL626	6	1.1
FL626 ZZ	6	1.1
GE 006 ECR	6	17.1
GE 006 ES	6	17.1
GE 006 HCR	6	17.1
GE 006 HS	6	17.1
GE 008 ECR	8	17.1
GE 008 ES	8	17.1
GE 008 HCR	8	17.1
GE 008 HS	8	17.1
GE 008 XES	8	17.1
GE 010 ECR	10	17.1
GE 010 ES	10	17.1
GE 010 HCR	10	17.1
GE 010 HS	10	17.1
GE 010 XES	10	17.1
GE 012 ECR	12	17.1
GE 012 ES	12	17.1
GE 012 HCR	12	17.1
GE 012 HS	12	17.1
GE 012 XES	12	17.1
GE 015 ECR	15	17.1
GE 015 ES	15	17.1
GE 015 ES2RS	15	17.1
GE 015 HCR	15	17.1
GE 015 HS2RS	15	17.1
GE 016 ES	16	17.1
GE 016 ES2RS	16	17.1
GE 016 XES	16	17.1
GE 016 XES2RS	16	17.1
GE 017 ECR	17	17.1
GE 017 ECR2RS	17	17.1
GE 017 ES	17	17.1
GE 017 ES2RS	17	17.1
GE 017 HCR	17	17.1
GE 017 HS2RS	17	17.1
GE 017 XES	17	17.1
GE 017 XES2RS	17	17.1
GE 018/32 XES	18	17.1
GE 018/32 XES2RS	18	17.1
GE 020 ECR	20	17.1
GE 020 ECR2RS	20	17.1
GE 020 ES	20	17.1
GE 020 ES2RS	20	17.1
GE 020 HCR	20	17.1
GE 020 HS2RS	20	17.1
GE 020 XES	20	17.1
GE 020 XES2RS	20	17.1
GE 025 ECR	25	17.1
GE 025 ECR2RS	25	17.1
GE 025 ES	25	17.1
GE 025 ES2RS	25	17.1
GE 025 HCR	25	17.1
GE 025 HS2RS	25	17.1
GE 025 XES	25	17.1
GE 025 XES2RS	25	17.1
GE 030 ECR	30	17.1
GE 030 ECR2RS	30	17.1
GE 030 ES	30	17.1
GE 030 ES2RS	30	17.1
GE 030 HCR2RS	30	17.1
GE 030 HS2RS	30	17.1
GE 030 XES	30	17.1
GE 030 XES2RS	30	17.1
GE 032/50 XES	32	17.1
GE 032/50 XES2RS	32	17.1
GE 032/62 XES	32	17.1
GE 032/62 XES2RS	32	17.1
GE 035 ECR2RS	35	17.1
GE 035 ES	35	17.1
GE 035 ES2RS	35	17.1
GE 035 HCR2RS	35	17.1
GE 035 HS2RS	35	17.1
GE 035 XES	35	17.1
GE 035 XES2RS	35	17.1
GE 040 ECR2RS	40	17.1
GE 040 ES	40	17.1
GE 040 ES2RS	40	17.1
GE 040 HCR2RS	40	17.1
GE 040 HS2RS	40	17.1
GE 040 XES	40	17.1
GE 040 XES2RS	40	17.1
GE 040/65 XES	40	17.1
GE 040/65 XES2RS	40	17.1
GE 045 ECR2RS	45	17.1
GE 045 ES	45	17.1
GE 045 ES2RS	45	17.1
GE 045 HCR2RS	45	17.1
GE 045 HS2RS	45	17.1
GE 045 XES	45	17.1
GE 045 XES2RS	45	17.1
GE 050 ECR2RS	50	17.1
GE 050 ES	50	17.1
GE 050 ES2RS	50	17.1
GE 050 HCR2RS	50	17.1
GE 050 HS2RS	50	17.1
GE 050 XES	50	17.1
GE 050 XES2RS	50	17.1
GE 050/80 XES	50	17.1
GE 050/80 XES2RS	50	17.1
GE 060 ECR2RS	60	17.1
GE 060 ES	60	17.1
GE 060 ES2RS	60	17.1
GE 060 HCR2RS	60	17.1
GE 060 HS2RS	60	17.1
GE 060 XES	60	17.1
GE 060 XES2RS	60	17.1
GE 070 ECR2RS	70	17.1
GE 070 ES	70	17.1
GE 070 ES2RS	70	17.1
GE 070 HCR2RS	70	17.1
GE 070 HS2RS	70	17.1
GE 070 XES	70	17.1
GE 070 XES2RS	70	17.1
GE 080 ECR2RS	80	17.1
GE 080 ES	80	17.1
GE 080 ES2RS	80	17.1
GE 080 HCR2RS	80	17.1
GE 080 HS2RS	80	17.1
GE 080 XES	80	17.1
GE 080 XES2RS	80	17.1
GE 090 ECR2RS	90	17.1
GE 090 ES	90	17.1
GE 090 ES2RS	90	17.1
GE 090 HCR2RS	90	17.1
GE 090 HS2RS	90	17.1
GE 090 XES	90	17.1
GE 090 XES2RS	90	17.1
GE 100 ECR2RS	100	17.1
GE 100 ES	100	17.1
GE 100 ES2RS	100	17.1
GE 100 HCR2RS	100	17.1
GE 100 HS2RS	100	17.1
GE 100 XES	100	17.1
GE 100 XES2RS	100	17.1
GE 1000 ES	1000	17.1
GE 110 ECR2RS	110	17.1
GE 110 ES	110	17.1
GE 110 ES2RS	110	17.1
GE 110 HCR2RS	110	17.1
GE 110 HS2RS	110	17.1
GE 110 XES	110	17.1
GE 110 XES2RS	110	17.1
GE 120 ECR2RS	120	17.1
GE 120 ES	120	17.1
GE 120 ES2RS	120	17.1
GE 120 HCR2RS	120	17.1
GE 120 HS2RS	120	17.1
GE 120 XES	120	17.1
GE 120 XES2RS	120	17.1
GE 140 ECR2RS	140	17.1
GE 140 ES	140	17.1
GE 140 ES2RS	140	17.1
GE 140 HCR2RS	140	17.1
GE 140 HS2RS	140	17.1
GE 160 ECR2RS	160	17.1
GE 160 ES	160	17.1
GE 160 ES2RS	160	17.1
GE 160 HCR2RS	160	17.1
GE 160 HS2RS	160	17.1
GE 180 ECR2RS	180	17.1
GE 180 ES	180	17.1
GE 180 ES2RS	180	17.1
GE 180 HCR2RS	180	17.1
GE 180 HS2RS	180	17.1
GE 200 ECR2RS	200	17.1
GE 200 ES	200	17.1
GE 200 ES2RS	200	17.1
GE 200 HCR2RS	200	17.1
GE 200 HS2RS	200	17.1
GE 220 ECR2RS	220	17.1
GE 220 ES	220	17.1
GE 220 ES2RS	220	17.1
GE 220 HCR2RS	220	17.1
GE 220 HS2RS	220	17.1
GE 240 ECR2RS	240	17.1
GE 240 ES	240	17.1
GE 240 ES2RS	240	17.1
GE 240 HCR2RS	240	17.1
GE 240 HS2RS	240	17.1
GE 260 ECR2RS	260	17.1
GE 260 ES	260	17.1
GE 260 ES2RS	260	17.1
GE 260 HCR2RS	260	17.1
GE 260 HS2RS	260	17.1
GE 280 ECR2RS	280	17.1
GE 280 ES	280	17.1
GE 280 ES2RS	280	17.1
GE 280 HCR2RS	280	17.1
GE 280 HS2RS	280	17.1
GE 300 ECR2RS	300	17.1
GE 300 ES	300	17.1
GE 300 ES2RS	300	17.1
GE 320 ES	320	17.1
GE 320 QCR	320	17.1
GE 340 ES	340	17.1
GE 340 QCR	340	17.1
GE 360 ES	360	17.1
GE 360 QCR	360	17.1
GE 380 ES	380	17.1
GE 380 QCR	380	17.1
GE 400 ES	400	17.1
GE 400 QCR	400	17.1
GE 420 ES	420	17.1
GE 420 QCR	420	17.1
GE 440 ES	440	17.1
GE 440 QCR	440	17.1
GE 460 ES	460	17.1
GE 460 QCR	460	17.1
GE 480 ES	480	17.1
GE 480 QCR	480	17.1
GE 500 ES	500	17.1
GE 500 QCR	500	17.1
GE 530 ES	530	17.1
GE 530 QCR	530	17.1
GE 560 ES	560	17.1
GE 560 QCR	560	17.1
GE 600 ES	600	17.1
GE 600 QCR	600	17.1
GE 630 ES	630	17.1
GE 670 ES	670	17.1
GE 710 ES	710	17.1
GE 750 ES	750	17.1
GE 800 ES	800	17.1
GE 850 ES	850	17.1
GE 900 ES	900	17.1
GE 950 ES	950	17.1
GS81102	15	10.1
GS81103	17	10.1
GS81104	20	10.1
GS81105	25	10.1
GS81106	30	10.1
GS81107	35	10.1
GS81108	40	10.1
GS81109	45	10.1
GS81110	50	10.1
GS81111	55	10.1
GS81112	60	10.1
GS81113	65	10.1
GS81114	70	10.1
GS81115	75	10.1
GS81116	80	10.1
GS81117	85	10.1
GS81118	90	10.1
GS81120	100	10.1
GS81122	110	10.1
GS81124	120	10.1
GS81126	130	10.1
GS81128	140	10.1
GS81130	150	10.1
GS81132	160	10.1
GS81134	170	10.1
GS81136	180	10.1
GS81138	190	10.1
GS81140	200	10.1
GS81144	220	10.1
GS81148	240	10.1
GS81152	260	10.1
GS81156	280	10.1
GS81160	300	10.1
GS81164	320	10.1
GS81168	340	10.1
GS81172	360	10.1
GS81176	380	10.1
GS81180	400	10.1
GS81184	420	10.1
GS81188	440	10.1
GS81192	460	10.1
GS81196	480	10.1
GS81206	30	10.1
GS81207	35	10.1
GS81208	40	10.1
GS81209	45	10.1
GS81210	50	10.1
GS81211	55	10.1
GS81212	60	10.1
GS81213	65	10.1
GS81214	70	10.1
GS81215	75	10.1
GS81216	80	10.1
GS81217	85	10.1
GS81218	90	10.1
GS81220	100	10.1
GS81222	110	10.1
GS81224	120	10.1
GS81226	130	10.1
GS81228	140	10.1
GS81230	150	10.1
GS81232	160	10.1
GS81234	170	10.1
GS81236	180	10.1
GS81238	190	10.1
GS81240	200	10.1
GS81244	220	10.1
GS81248	240	10.1
GS81252	260	10.1
GS81256	280	10.1
GS81260	300	10.1
GS81264	320	10.1
GS81268	340	10.1
GS81272	360	10.1
GS81276	380	10.1
GS81280	400	10.1
GS81284	420	10.1
GS81288	440	10.1
GS81292	460	10.1
GS81296	480	10.1
GS89306	30	10.1
GS89307	35	10.1
GS89308	40	10.1
GS89309	45	10.1
GS89310	50	10.1
GS89311	55	10.1
GS89312	60	10.1
GS89313	65	10.1
GS89314	70	10.1
GS89315	75	10.1
GS89316	80	10.1
GS89317	85	10.1
GS89318	90	10.1
GS89320	100	10.1
GS89322	110	10.1
GS89324	120	10.1
GS89326	130	10.1
GS89328	140	10.1
GS89330	150	10.1
GS89412	60	10.1
GS89413	65	10.1
GS89414	70	10.1
GS89415	75	10.1
GS89416	80	10.1
GS89417	85	10.1
GS89418	90	10.1
GS89420	100	10.1
GS89422	110	10.1
GS89424	120	10.1
GS89426	130	10.1
GS89428	140	10.1
GS89430	150	10.1
GS89432	160	10.1
GS89434	170	10.1
GS89436	180	10.1
GS89438	190	10.1
GS89440	200	10.1
GS89444	220	10.1
GS89448	240	10.1

https://nppnovoteh.com

23. INDEX

Index	d [mm]	Tab.No
GS89452	260	10.1
GS89456	280	10.1
GS89460	300	10.1
GS89464	320	10.1
H203	14	18.2
H204	17	18.2
H205	20	18.2
H206	25	18.2
H207	30	18.2
H208	35	18.2
H209	40	18.2
H210	45	18.2
H211	50	18.2
H212	55	18.2
H212749/10	65,987	4.2
H213	60	18.2
H214	60	18.2
H215	65	18.2
H216	70	18.2
H217	75	18.2
H218	80	18.2
H219	85	18.2
H220	90	18.2
H221	95	18.2
H222	100	18.2
H2304	17	18.2
H2305	20	18.2
H2306	25	18.2
H2307	30	18.2
H2308	35	18.2
H2309	40	18.2
H2310	45	18.2
H2311	50	18.2
H2312	55	18.2
H2313	60	18.2
H2314	60	18.2
H2315	65	18.2
H2316	70	18.2
H2317	75	18.2
H2318	80	18.2
H2319	85	18.2
H2320	90	18.2
H2321	95	18.2
H2322	100	18.2
H2324	110	18.2
H2326	115	18.2
H2328	125	18.2
H2330	135	18.2
H2332	140	18.2
H2334	150	18.2
H2336	160	18.2
H2338	170	18.2
H2340	180	18.2
H2344	200	18.2
H2348	220	18.2
H2352	240	18.2
H2356	260	18.2
H238140/10	165,1	4.2
H238148/10	174,625	4.2
H239640/10	177,8	4.2
H239649/10	187,325	4.2
H239649/12	187,325	4.2
H240/500	470	18.2
H240/530	500	18.2
H240/560	530	18.2
H240/600	530	18.2
H240/630	600	18.2
H240/670	630	18.2
H24038	170	18.2
H24040	180	18.2
H24048	220	18.2
H24056	260	18.2
H24068	320	18.2
H24084	400	18.2
H241/560	530	18.2
H241/600	530	18.2
H241/630	600	18.2
H241/670	630	18.2
H242649/10	206,375	4.2
H247535/10	200,025	4.2
H247549/10	234,95	4.2
H30/500	470	18.2
H30/530	500	18.2
H30/560	530	18.2
H30/600	530	18.2
H30/630	600	18.2
H30/670	630	18.2
H30/710	670	18.2
H30/800	750	18.2
H30/900	850	18.2

Index	d [mm]	Tab.No
H3024	110	18.2
H3026	115	18.2
H3028	125	18.2
H3030	135	18.2
H3032	140	18.2
H3034	150	18.2
H3036	160	18.2
H3038	170	18.2
H304	17	18.2
H3040	180	18.2
H3044	200	18.2
H3048	220	18.2
H305	20	18.2
H3052	240	18.2
H3056	260	18.2
H306	25	18.2
H3060	280	18.2
H3064	300	18.2
H3068	320	18.2
H307	30	18.2
H3072	340	18.2
H3076	360	18.2
H308	35	18.2
H3080	380	18.2
H3084	400	18.2
H3088	410	18.2
H309	40	18.2
H3092	430	18.2
H3096	450	18.2
H31/500	470	18.2
H31/530	500	18.2
H31/560	530	18.2
H31/600	530	18.2
H31/630	600	18.2
H31/670	630	18.2
H31/710	670	18.2
H31/750	710	18.2
H310	45	18.2
H311	50	18.2
H312	55	18.2
H3120	90	18.2
H3122	100	18.2
H3124	110	18.2
H3126	115	18.2
H3128	125	18.2
H313	60	18.2
H3130	135	18.2
H3132	140	18.2
H3134	150	18.2
H3136	160	18.2
H3138	170	18.2
H314	60	18.2
H3140	180	18.2
H3144	200	18.2
H3148	220	18.2
H315	65	18.2
H3152	240	18.2
H3156	260	18.2
H316	70	18.2
H3160	280	18.2
H3164	300	18.2
H3168	320	18.2
H317	75	18.2
H3172	340	18.2
H3176	360	18.2
H318	80	18.2
H3180	380	18.2
H3184	400	18.2
H3188	410	18.2
H319	85	18.2
H3192	430	18.2
H3196	450	18.2
H32/500	470	18.2
H32/560	530	18.2
H32/630	600	18.2
H320	90	18.2
H321	95	18.2
H322	100	18.2
H3260	280	18.2
H3264	300	18.2
H3268	320	18.2
H3272	340	18.2
H3276	360	18.2
H3280	380	18.2
H3284	400	18.2
H3288	410	18.2
H3292	430	18.2
H3296	450	18.2
H3308	35	18.2
H3309	40	18.2

Index	d [mm]	Tab.No
H3310	45	18.2
H3311	50	18.2
H3312	55	18.2
H3313	60	18.2
H3314	60	18.2
H3315	65	18.2
H3316	70	18.2
H3317	75	18.2
H3318	80	18.2
H3319	85	18.2
H3320	90	18.2
H3321	95	18.2
H3322	100	18.2
H3324	110	18.2
H3326	115	18.2
H3328	125	18.2
H3330	135	18.2
H3332	140	18.2
H3334	150	18.2
H3336	160	18.2
H3338	170	18.2
H3340	180	18.2
H3834	150	18.2
H3836	160	18.2
H3838	170	18.2
H3840	180	18.2
H39/1000	950	18.2
H39/1060	1000	18.2
H39/500	470	18.2
H39/530	500	18.2
H39/560	530	18.2
H39/600	560	18.2
H39/630	600	18.2
H39/670	630	18.2
H39/710	670	18.2
H39/750	710	18.2
H39/800	750	18.2
H39/850	800	18.2
H39/900	850	18.2
H39/950	900	18.2
H3924	110	18.2
H3926	115	18.2
H3928	125	18.2
H3930	135	18.2
H3932	140	18.2
H3934	150	18.2
H3936	160	18.2
H3938	170	18.2
H3940	180	18.2
H3944	200	18.2
H3948	220	18.2
H3952	240	18.2
H3956	260	18.2
H3960	280	18.2
H3964	300	18.2
H3968	320	18.2
H3972	340	18.2
H3976	360	18.2
H3980	380	18.2
H3984	400	18.2
H3988	410	18.2
H3992	430	18.2
H3996	450	18.2
H414235/10	63,5	4.2
H414242/10	66,675	4.2
H414245/10	68,262	4.2
H414245X/10	68,262	4.2
H414249/10	71,438	4.2
H715332/11	60,325	4.2
H715334/11	61,912	4.2
H715340/11	65,088	4.2
H715341/11	66,675	4.2
H715341A/11	66,675	4.2
H715343/10	68,262	4.2
H715343/11	68,262	4.2
H715345/10	71,438	4.2
H715345/11	71,438	4.2
H715347/11	69,987	4.2
H715348/11	77,788	4.2
H816249/10	77,788	4.2
H852849/10	266,7	4.2
H859049/10	314,325	4.2
H913840/10	59,987	4.2
H913842/10	61,912	4.2
H913843/10	61,912	4.2
H913849/10	69,85	4.2
H916642/10	69,987	4.2
H917840/10	76,2	4.2
H917849/10	82,55	4.2
H924045/10	111,125	4.2

Index	d [mm]	Tab.No
H936340/10	155,575	4.2
H936340/16	155,575	4.2
H936349/10	168,275	4.2
H961649/10	317,5	4.2
H969249/10	406,4	4.2
HF0306	3	6.10
HF0406	4	6.10
HF0612	6	6.10
HF0812	8	6.10
HF1012	10	6.10
HF1216	12	6.10
HF1416	14	6.10
HF1616	16	6.10
HF1816	18	6.10
HF2016	20	6.10
HF2520	25	6.10
HF3020	30	6.10
HF3520	35	6.10
HH144642/14	200,025	4.2
HH221430/10	76,2	4.2
HH221431/10	79,375	4.2
HH221434/10	88,9	4.2
HH221440/10	95,25	4.2
HH221442/10	98,425	4.2
HH221447/10	99,982	4.2
HH221449/10	101,6	4.2
HH221449A/10	101,6	4.2
HH224334/10	99,975	4.2
HH224335/10	101,6	4.2
HH224340/10	107,95	4.2
HH224346/10	114,3	4.2
HH224349/10	114,975	4.2
HH228340/10	120,65	4.2
HH228349/10	127	4.2
HH231637/15	127	4.2
HH231649/10	139,7	4.2
HH231649/15	139,7	4.2
HH234031/10	139,7	4.2
HH234048/10	152,4	4.2
HH249949/10	247,65	4.2
HH258248/10	299,974	4.2
HH421246C/10	98,425	4.2
HH437549/10	165,1	4.2
HH506348/10	49,212	4.2
HH506349/10	49,987	4.2
HH814542/10	60,325	4.2
HH840249/10	190,5	4.2
HH914447/12	63,5	4.2
HH914449/12	66,675	4.2
HH923649/10	101,6	4.2
HH923649/11	101,6	4.2
HH926744/10	114,3	4.2
HH926744/16	114,3	4.2
HH926749/10	120,65	4.2
HH932132/10	127	4.2
HH932145/10	146,05	4.2
HH932145/15	146,05	4.2
HH949549/10	228,6	4.2
HH953749/10	254	4.2
HJ10/500	500	5.4
HJ1034	170	5.4
HJ1036	180	5.4
HJ1038	190	5.4
HJ1040	200	5.4
HJ1044	220	5.4
HJ1048	240	5.4
HJ1052	260	5.4
HJ1056	280	5.4
HJ1060	300	5.4
HJ1064	320	5.4
HJ1068	340	5.4
HJ1072	360	5.4
HJ1076	380	5.4
HJ1080	400	5.4
HJ1084	420	5.4
HJ1088	440	5.4
HJ1092	460	5.4
HJ1096	480	5.4
HJ202 E	15	5.4
HJ203 E	17	5.4
HJ204 E	20	5.4
HJ205 E	25	5.4
HJ206 E	30	5.4
HJ207 E	35	5.4
HJ208 E	40	5.4
HJ209 E	45	5.4
HJ210 E	50	5.4
HJ211 E	55	5.4
HJ212 E	60	5.4
HJ213 E	65	5.4

Index	d [mm]	Tab.No
HJ214 E	70	5.4
HJ215 E	75	5.4
HJ216 E	80	5.4
HJ217 E	85	5.4
HJ218 E	90	5.4
HJ219 E	95	5.4
HJ220 E	100	5.4
HJ2203 E	17	5.4
HJ2204 E	20	5.4
HJ2205 E	25	5.4
HJ2206 E	30	5.4
HJ2207 E	35	5.4
HJ2208 E	40	5.4
HJ2209 E	45	5.4
HJ221 E	105	5.4
HJ2210 E	50	5.4
HJ2211 E	55	5.4
HJ2212 E	60	5.4
HJ2213 E	65	5.4
HJ2214 E	70	5.4
HJ2215 E	75	5.4
HJ2216 E	80	5.4
HJ2217 E	85	5.4
HJ2218 E	90	5.4
HJ2219 E	95	5.4
HJ222 E	110	5.4
HJ2220 E	100	5.4
HJ2222 E	110	5.4
HJ2224 E	120	5.4
HJ2226 E	130	5.4
HJ2228 E	140	5.4
HJ2230 E	150	5.4
HJ2232 E	160	5.4
HJ2234 E	170	5.4
HJ2236 E	180	5.4
HJ2238 E	190	5.4
HJ224 E	120	5.4
HJ2240 E	200	5.4
HJ2244	220	5.4
HJ2248	240	5.4
HJ2252	260	5.4
HJ2256 E	280	5.4
HJ226 E	130	5.4
HJ2260	300	5.4
HJ2264	320	5.4
HJ228 E	140	5.4
HJ230 E	150	5.4
HJ2304 E	20	5.4
HJ2305 E	25	5.4
HJ2306 E	30	5.4
HJ2307 E	35	5.4
HJ2308 E	40	5.4
HJ2309 E	45	5.4
HJ2310 E	50	5.4
HJ2311 E	55	5.4
HJ2312 E	60	5.4
HJ2313 E	65	5.4
HJ2314 E	70	5.4
HJ2315 E	75	5.4
HJ2316 E	80	5.4
HJ2317 E	85	5.4
HJ2318 E	90	5.4
HJ2319 E	95	5.4
HJ232 E	160	5.4
HJ2320 E	100	5.4
HJ2322 E	110	5.4
HJ2324 E	120	5.4
HJ2326 E	130	5.4
HJ2328 E	140	5.4
HJ2330 E	150	5.4
HJ2332 E	160	5.4
HJ2334	170	5.4
HJ2336	180	5.4
HJ2338 E	190	5.4
HJ234 E	170	5.4
HJ2340 E	200	5.4
HJ2344 E	220	5.4
HJ2348	240	5.4
HJ2356	280	5.4
HJ236 E	180	5.4
HJ238 E	190	5.4
HJ240 E	200	5.4
HJ244 E	220	5.4
HJ248 E	240	5.4
HJ252 E	260	5.4
HJ256	280	5.4
HJ260	300	5.4
HJ264	320	5.4
HJ302 E	15	5.4
HJ303 E	17	5.4

Index	d [mm]	Tab.No
HJ304 E	20	5.4
HJ305 E	25	5.4
HJ306 E	30	5.4
HJ307 E	35	5.4
HJ308 E	40	5.4
HJ309 E	45	5.4
HJ310 E	50	5.4
HJ311 E	55	5.4
HJ312 E	60	5.4
HJ313 E	65	5.4
HJ314 E	70	5.4
HJ315 E	75	5.4
HJ316 E	80	5.4
HJ317 E	85	5.4
HJ318 E	90	5.4
HJ319 E	95	5.4
HJ320 E	100	5.4
HJ321 E	105	5.4
HJ322 E	110	5.4
HJ324 E	120	5.4
HJ326 E	130	5.4
HJ328 E	140	5.4
HJ330 E	150	5.4
HJ332 E	160	5.4
HJ334 E	170	5.4
HJ336 E	180	5.4
HJ338 E	190	5.4
HJ340 E	200	5.4
HJ344	220	5.4
HJ348 E	240	5.4
HJ352	260	5.4
HJ356 E	280	5.4
HJ406	30	5.4
HJ407	35	5.4
HJ408	40	5.4
HJ409	45	5.4
HJ410	50	5.4
HJ411	55	5.4
HJ412	60	5.4
HJ413	65	5.4
HJ414	70	5.4
HJ415	75	5.4
HJ416	80	5.4
HJ417	85	5.4
HJ418	90	5.4
HJ419	95	5.4
HJ420	100	5.4
HJ421	105	5.4
HJ422	110	5.4
HJ424	120	5.4
HJ426	130	5.4
HJ428	140	5.4
HJ430	150	5.4
HK0408	4	6.2
HK0409	4	6.2
HK0508	5	6.2
HK0509	5	6.2
HK0607	6	6.2
HK0608	6	6.2
HK0609	6	6.2
HK0610	6	6.2
HK0611	6	6.2
HK0708	7	6.2
HK0709	7	6.2
HK0710	7	6.2
HK0712	7	6.2
HK071208	7	6.2
HK0808	8	6.2
HK0809	8	6.2
HK0810	8	6.2
HK0812	8	6.2
HK081410	8	6.2
HK081412	8	6.2
HK081414	8	6.2
HK0815	8	6.2
HK081512	8	6.2
HK0908	9	6.2
HK0909	9	6.2
HK0910	9	6.2
HK0912	9	6.2
HK0914	9	6.2
HK091510	9	6.2
HK091512	9	6.2
HK091513	9	6.2
HK091514	9	6.2
HK091516	9	6.2
HK1008	10	6.2
HK1009	10	6.2
HK1010	10	6.2
HK1012	10	6.2
HK1014	10	6.2
HK1015	10	6.2
HK101610	10	6.2
HK101612	10	6.2
HK101614	10	6.2
HK101615	10	6.2
HK101616	10	6.2
HK1208	12	6.2
HK1209	12	6.2
HK1210	12	6.2
HK1212	12	6.2
HK1214	12	6.2
HK1216	12	6.2
HK121712	12	6.2
HK121718	12	6.2
HK121810	12	6.2
HK121812	12	6.2
HK121814	12	6.2
HK121816	12	6.2
HK121818	12	6.2
HK1410	14	6.2
HK1412	14	6.2
HK1414	14	6.2
HK1416	14	6.2
HK1418	14	6.2
HK1420	14	6.2
HK142212	14	6.2
HK142214	14	6.2
HK142216	14	6.2
HK142218	14	6.2
HK142220	14	6.2
HK1510	15	6.2
HK1512	15	6.2
HK1514	15	6.2
HK1516	15	6.2
HK1518	15	6.2
HK1520	15	6.2
HK152012	15	6.2
HK152016	15	6.2
HK152020	15	6.2
HK152212	15	6.2
HK152312	15	6.2
HK152314	15	6.2
HK152316	15	6.2
HK152318	15	6.2
HK152320	15	6.2
HK1610	16	6.2
HK1612	16	6.2
HK1614	16	6.2
HK1616	16	6.2
HK1618	16	6.2
HK1620	16	6.2
HK162109	16	6.2
HK162412	16	6.2
HK162414	16	6.2
HK162416	16	6.2
HK162418	16	6.2
HK162420	16	6.2
HK1710	17	6.2
HK1712	17	6.2
HK1714	17	6.2
HK1716	17	6.2
HK1718	17	6.2
HK1720	17	6.2
HK1722	17	6.2
HK172512	17	6.2
HK172514	17	6.2
HK172516	17	6.2
HK172518	17	6.2
HK172520	17	6.2
HK1810	18	6.2
HK1812	18	6.2
HK1814	18	6.2
HK1816	18	6.2
HK1818	18	6.2
HK1820	18	6.2
HK182612	18	6.2
HK182614	18	6.2
HK182616	18	6.2
HK182618	18	6.2
HK182620	18	6.2
HK2010	20	6.2
HK2012	20	6.2
HK2014	20	6.2
HK2016	20	6.2
HK2018	20	6.2
HK2020	20	6.2
HK2025	20	6.2
HK202812	20	6.2
HK202814	20	6.2
HK202816	20	6.2
HK202818	20	6.2
HK202820	20	6.2
HK202918	20	6.2
HK2210	22	6.2
HK2212	22	6.2
HK2214	22	6.2
HK2216	22	6.2
HK2218	22	6.2
HK2220	22	6.2
HK223012	22	6.2
HK223014	22	6.2
HK223016	22	6.2
HK223018	22	6.2
HK223020	22	6.2
HK2508	25	6.2
HK2512	25	6.2
HK2514	25	6.2
HK2516	25	6.2
HK2518	25	6.2
HK2520	25	6.2
HK2522	25	6.2
HK2524	25	6.2
HK253315	25	6.2
HK253514	25	6.2
HK253516	25	6.2
HK253518	25	6.2
HK253520	25	6.2
HK253524	25	6.2
HK2812	28	6.2
HK2814	28	6.2
HK2816	28	6.2
HK2818	28	6.2
HK2820	28	6.2
HK2824	28	6.2
HK283814	28	6.2
HK283816	28	6.2
HK283818	28	6.2
HK283820	28	6.2
HK283824	28	6.2
HK3012	30	6.2
HK3014	30	6.2
HK3016	30	6.2
HK3018	30	6.2
HK3020	30	6.2
HK3024	30	6.2
HK3038	30	6.2
HK303824	30	6.2
HK303832	30	6.2
HK304014	30	6.2
HK304016	30	6.2
HK304018	30	6.2
HK304020	30	6.2
HK304024	30	6.2
HK3212	32	6.2
HK3214	35	6.2
HK3216	35	6.2
HK3218	35	6.2
HK3220	35	6.2
HK3224	35	6.2
HK324214	35	6.2
HK324216	35	6.2
HK324218	35	6.2
HK324220	35	6.2
HK324224	35	6.2
HK3512	35	6.2
HK3514	35	6.2
HK3516	35	6.2
HK3518	35	6.2
HK3520	35	6.2
HK3524	35	6.2
HK354332	35	6.2
HK354514	35	6.2
HK354516	35	6.2
HK354518	35	6.2
HK354520	35	6.2
HK354524	35	6.2
HK3812	38	6.2
HK3814	38	6.2
HK3816	38	6.2
HK3818	38	6.2
HK3820	38	6.2
HK3824	38	6.2
HK384814	38	6.2
HK384816	38	6.2
HK384818	38	6.2
HK384820	38	6.2
HK384824	38	6.2
HK4012	40	6.2
HK4014	40	6.2
HK4016	40	6.2
HK4018	40	6.2
HK4020	40	6.2
HK4024	40	6.2
HK405014	40	6.2
HK405016	40	6.2
HK405018	40	6.2
HK405020	40	6.2
HK405024	40	6.2
HK4212	42	6.2
HK4214	42	6.2
HK4216	42	6.2
HK4218	42	6.2
HK4220	42	6.2
HK4224	42	6.2
HK425214	42	6.2
HK425216	42	6.2
HK425218	42	6.2
HK425220	42	6.2
HK425224	42	6.2
HK4512	45	6.2
HK4514	45	6.2
HK4516	45	6.2
HK4518	45	6.2
HK4520	45	6.2
HK4524	45	6.2
HK455514	45	6.2
HK455516	45	6.2
HK455518	45	6.2
HK455520	45	6.2
HK455524	45	6.2
HK455538	45	6.2
HK5016	50	6.2
HK5018	50	6.2
HK5020	50	6.2
HK5024	50	6.2
HK5025	50	6.2
HK506038	50	6.2
HK5516	55	6.2
HK5518	55	6.2
HK5520	55	6.2
HK5524	55	6.2
HK6016	60	6.2
HK6018	60	6.2
HK6020	60	6.2
HK6024	60	6.2
HK6516	65	6.2
HK6518	65	6.2
HK6520	65	6.2
HK6524	65	6.2
HK7016	70	6.2
HK7018	70	6.2
HK7020	70	6.2
HK7024	70	6.2
HM125948/10	123,825	4.2
HM204049/10	45,987	4.2
HM212044/11	60,325	4.2
HM212046/11	63,5	4.2
HM212047/11	63,5	4.2
HM212049/10	66,675	4.2
HM212049/11	66,675	4.2
HM212049X/11	66,675	4.2
HM215249/10	75,987	4.2
HM218238/10	79,974	4.2
HM218248/10	89,974	4.2
HM220149/10	99,974	4.2
HM227545/19	129,967	4.2
HM231140/10	146,05	4.2
HM231148/10	149,225	4.2
HM231149/10	149,225	4.2
HM237532/10	160,325	4.2
HM237535/10	165,1	4.2
HM237542/10	174,625	4.2
HM237545/10	177,8	4.2
HM237545/13	177,8	4.2
HM252343/10	254	4.2
HM252344/10	254	4.2
HM252348/10	260,35	4.2
HM252349/10	260,35	4.2
HM256849/10	300,038	4.2
HM259048/10	317,5	4.2
HM259049/10	317,5	4.2
HM261049/10	333,375	4.2
HM262748/10	346,075	4.2
HM262749/10	346,075	4.2
HM265049/10	368,249	4.2
HM266446/10	381	4.2
HM266447/10	381	4.2
HM266448/10	384,175	4.2
HM266449/10	384,175	4.2
HM30/1000	1000	18.4
HM30/1060	1060	18.4
HM30/1120	1120	18.4
HM30/1180	1180	18.4
HM30/1250	1250	18.4
HM30/1320	1320	18.4
HM30/1400	1400	18.4
HM30/1500	1500	18.4
HM30/500	500	18.4
HM30/530	530	18.4
HM30/560	560	18.4
HM30/600	600	18.4
HM30/630	630	18.4
HM30/670	670	18.4
HM30/710	710	18.4
HM30/750	750	18.4
HM30/800	800	18.4
HM30/850	850	18.4
HM30/900	900	18.4
HM30/950	950	18.4
HM3044	220	18.4
HM3048	240	18.4
HM3052	260	18.4
HM3056	280	18.4
HM3060	300	18.4
HM3064	320	18.4
HM3068	340	18.4
HM3072	360	18.4
HM3076	380	18.4
HM3080	400	18.4
HM3084	420	18.4
HM3088	440	18.4
HM3092	460	18.4
HM3096	480	18.4
HM31/1000	1000	18.4
HM31/1060	1060	18.4
HM31/1120	1120	18.4
HM31/1180	1180	18.4
HM31/1250	1250	18.4
HM31/1320	1320	18.4
HM31/1400	1400	18.4
HM31/1500	1500	18.4
HM31/500	500	18.4
HM31/530	530	18.4
HM31/560	560	18.4
HM31/600	600	18.4
HM31/630	630	18.4
HM31/670	670	18.4
HM31/710	710	18.4
HM31/750	750	18.4
HM31/800	800	18.4
HM31/850	850	18.4
HM31/900	900	18.4
HM31/950	950	18.4
HM3160	300	18.4
HM3164	320	18.4
HM3168	340	18.4
HM3172	360	18.4
HM3176	380	18.4
HM3180	400	18.4
HM3184	420	18.4
HM3188	440	18.4
HM3192	460	18.4
HM3196	480	18.4
HM321245/10	99,212	4.2
HM44	220	18.4
HM48	240	18.4
HM516442/10	76,2	4.2
HM516448/10	82,55	4.2
HM516449/10	82,55	4.2
HM52	260	18.4
HM535349/10	171,45	4.2
HM542948/11	203,2	4.2
HM56	280	18.4
HM617049/10	85,725	4.2
HM624749/10	120,65	4.2
HM746645/10	228,6	4.2
HM746646/10	228,6	4.2
HM801346/10	38,1	4.2
HM801346X/10	38,1	4.2
HM801349/10	40,483	4.2
HM803145/10	41,275	4.2
HM803146/10	41,275	4.2
HM803146/11	41,275	4.2
HM803149/10	44,45	4.2
HM804840/10	41,275	4.2
HM804842/10	44,45	4.2
HM804843/10	44,45	4.2
HM804846/10	47,625	4.2
HM804848/10	48,412	4.2

https://nppnovoteh.com

23. INDEX

Index	d [mm]	Tab.No
HM804848/11	48,412	4.2
HM804848A/10	48,412	4.2
HM804849/10	48,412	4.2
HM807035/10	41,275	4.2
HM807035/11	41,275	4.2
HM807040/10	44,45	4.2
HM807044/10	49,212	4.2
HM807046/10	50,8	4.2
HM807048/10	54,488	4.2
HM807049/10	53,975	4.2
HM807049A/10	53,975	4.2
HM813839/10	59,987	4.2
HM813840/10	55,562	4.2
HM813841/10	60,325	4.2
HM813841A/10	60,325	4.2
HM813842/10	63,5	4.2
HM813842A/10	63,5	4.2
HM813844/10	66,675	4.2
HM813844/11	66,675	4.2
HM813849/10	71,438	4.2
HM81649/10	15,875	4.2
HM88542/10	31,75	4.2
HM88542/11	31,75	4.2
HM88542/12	31,75	4.2
HM88547/10	33,338	4.2
HM88630/10	25,4	4.2
HM88648/10	35,717	4.2
HM88648/11AS	35,717	4.2
HM88649/10	34,925	4.2
HM88649A/13	34,925	4.2
HM89249/10	36,512	4.2
HM89440/10	31,75	4.2
HM89443/10	33,338	4.2
HM89444/10	33,338	4.2
HM89446/10	34,925	4.2
HM89448/10	36,512	4.2
HM89449/10	36,512	4.2
HM89449/11	36,512	4.2
HM903244/10	41,275	4.2
HM903245/10	41,275	4.2
HM903247/10	44,45	4.2
HM903248/10	44,988	4.2
HM903249/10	44,45	4.2
HM903249A/10	44,45	4.2
HM905843/10	44,988	4.2
HM907643/14	50,8	4.2
HM911242/10	53,975	4.2
HM911244/11	59,987	4.2
HM911245/10	60,325	4.2
HM911245/16	60,325	4.2
HM911249/10	61,912	4.2
HM914545/10	69,85	4.2
HM926740/10	114,3	4.2
HM926747/10	127	4.2
HM926749/10	127,792	4.2
IR1000X1053X100	1000	6.11
IR1000X1053X128	1000	6.11
IR1000X1082X185	1000	6.11
IR100X110X20	100	6.11
IR100x110x30	100	6.11
IR100x110x40	100	6.11
IR100X113X24	100	6.11
IR100x115x40	100	6.11
IR100X119X34	100	6.11
IR100X119X46	100	6.11
IR100X120X60,3	100	6.11
IR100X121X60,32	100	6.11
IR100X127,5X47	100	6.11
IR100X127,5X73	100	6.11
IR100X129,5X82,6	100	6.11
IR100X139X58	100	6.11
IR105X115X20	105	6.11
IR105X119,5X26	105	6.11
IR105X125,5X36	105	6.11
IR105X126,5X65,1	105	6.11
IR105X126,8X65,1	105	6.11
IR105X133X49	105	6.11
IR105X135X87,3	105	6.11
IR105X144,5X60	105	6.11
IR1060X1146X195	1060	6.11
IR1060X1146X250	1060	6.11
IR10x13x12,5	10	6.11
IR10x14x12	10	6.11
IR10x14x13	10	6.11
IR10x14x14	10	6.11
IR10x14x16	10	6.11
IR10x14x20	10	6.11
IR110x120x30	110	6.11
IR110X125X28	110	6.11
IR110x125x40	110	6.11
IR110x125x54	110	6.11
IR110X132,5X38	110	6.11
IR110X132,5X53	110	6.11
IR110X132,5X69,8	110	6.11
IR110X132,9X69,85	110	6.11
IR110X143X50	110	6.11
IR110X143X80	110	6.11
IR110X143X92,1	110	6.11
IR110X155X65	110	6.11
IR1120X1182X106	1120	6.11
IR1120X1231X345	1120	6.11
IR1180X1242X106	1180	6.11
IR1180X1258X206	1180	6.11
IR120x130x30	120	6.11
IR120X131,5X27	120	6.11
IR120X135X28	120	6.11
IR120x135x45	120	6.11
IR120x135x60	120	6.11
IR120X143,5X40	120	6.11
IR120X143,5X58	120	6.11
IR120X143,5X76	120	6.11
IR120X145,1X76,2	120	6.11
IR120X154X106	120	6.11
IR120X154X55	120	6.11
IR120X154X86	120	6.11
IR120X170X72	120	6.11
IR12x15x12	12	6.11
IR12x15x12,5	12	6.11
IR12x15x16	12	6.11
IR12x15x16,5	12	6.11
IR12x15x22,5	12	6.11
IR12x16x12	12	6.11
IR12x16x13	12	6.11
IR12x16x14	12	6.11
IR12x16x16	12	6.11
IR12x16x20	12	6.11
IR12x16x22	12	6.11
IR130X142X24	130	6.11
IR130X142X30	130	6.11
IR130x145x35	130	6.11
IR130X147X42	130	6.11
IR130X148X33	130	6.11
IR130x150x50	130	6.11
IR130x150x67	130	6.11
IR130X153,5X40	130	6.11
IR130X153,5X64	130	6.11
IR130X155X79,38	130	6.11
IR130X156X80	130	6.11
IR130X167X112	130	6.11
IR130X167X58	130	6.11
IR130X167X93	130	6.11
IR130X185X78	130	6.11
IR1320X1395X122	1320	6.11
IR1320X1420X230	1320	6.11
IR140X152X24	140	6.11
IR140X152X30	140	6.11
IR140x155x35	140	6.11
IR140X158X33	140	6.11
IR140x160x50	140	6.11
IR140x160x67	140	6.11
IR140X168,4X82,55	140	6.11
IR140X169X42	140	6.11
IR140X169X68	140	6.11
IR140X169X88	140	6.11
IR140X180X102	140	6.11
IR140X180X118	140	6.11
IR140X180X62	140	6.11
IR140X198X82	140	6.11
IR14x17x17	14	6.11
IR150x165x40	150	6.11
IR150X169,5X35	150	6.11
IR150x170x60	150	6.11
IR150X171X56	150	6.11
IR150X181,5X88,9	150	6.11
IR150X182X45	150	6.11
IR150X182X73	150	6.11
IR150X182X96	150	6.11
IR150X193X108	150	6.11
IR150X193X128	150	6.11
IR150X193X65	150	6.11
IR150X213X85	150	6.11
IR15x18x12,5	15	6.11
IR15x18x16	15	6.11
IR15x18x16,5	15	6.11
IR15X19,3X11	15	6.11
IR15x19x16	15	6.11
IR15x19x20	15	6.11
IR15x20x12	15	6.11
IR15x20x13	15	6.11
IR15x20x14	15	6.11
IR15x20x18	15	6.11
IR15x20x23	15	6.11
IR15X21X13	15	6.11
IR15x22x20	15	6.11
IR1600X1694X155	1600	6.11
IR160X175X28	160	6.11
IR160X175X36	160	6.11
IR160x175x40	160	6.11
IR160X179X48	160	6.11
IR160X180X38	160	6.11
IR160x180x60	160	6.11
IR160X187X86	160	6.11
IR160X193,6X98,42	160	6.11
IR160X193X80	160	6.11
IR160X195X104	160	6.11
IR160X195X48	160	6.11
IR160X204X114	160	6.11
IR160X204X68	160	6.11
IR160X208X136	160	6.11
IR1700X1784X160	1700	6.11
IR170x185x45	170	6.11
IR170x190x60	170	6.11
IR170X191X54	170	6.11
IR170X193X42	170	6.11
IR170X196X67	170	6.11
IR170X205,4X104,77	170	6.11
IR170X205X86	170	6.11
IR170X207X52	170	6.11
IR170X208X110	170	6.11
IR170X216X120	170	6.11
IR170X218X73	170	6.11
IR170X220X140	170	6.11
IR17x20x16	17	6.11
IR17x20x16,5	17	6.11
IR17x20x20	17	6.11
IR17x20x20,5	17	6.11
IR17x20x30,5	17	6.11
IR17x21x16	17	6.11
IR17x21x20	17	6.11
IR17X22,1X12	17	6.11
IR17X22,1X16	17	6.11
IR17x22x13	17	6.11
IR17x22x14	17	6.11
IR17x22x16	17	6.11
IR17x22x18	17	6.11
IR17x22x23	17	6.11
IR17X24,2X14	17	6.11
IR17x24x20	17	6.11
IR180x195x45	180	6.11
IR180X205X46	180	6.11
IR180x205x69	180	6.11
IR180X207X74	180	6.11
IR180X215X86	180	6.11
IR180X217X52	180	6.11
IR180X218X112	180	6.11
IR180X227X126	180	6.11
IR180X231X75	180	6.11
IR180X232X150	180	6.11
IR180X247X95	180	6.11
IR190X207,5X33	190	6.11
IR190x210x50	190	6.11
IR190X215X46	190	6.11
IR190x215x69	190	6.11
IR190X217X75	190	6.11
IR190X223X104	190	6.11
IR190X228X92	190	6.11
IR190X230X55	190	6.11
IR190X231X120	190	6.11
IR190X245X132	190	6.11
IR190X245X155	190	6.11
IR190X245X78	190	6.11
IR200X211,5X30	200	6.11
IR200X218X38	200	6.11
IR200x220x50	200	6.11
IR200x225x80	200	6.11
IR200X229X51	200	6.11
IR200X232X82	200	6.11
IR200X241X98	200	6.11
IR200X243X58	200	6.11
IR200X244X128	200	6.11
IR200X253X138	200	6.11
IR200X258X80	200	6.11
IR200X260X165	200	6.11
IR20x24x16	20	6.11
IR20x24x20	20	6.11
IR20x25x12,5	20	6.11
IR20x25x16	20	6.11
IR20x25x16,5	20	6.11
IR20x25x17	20	6.11
IR20x25x18	20	6.11
IR20x25x20	20	6.11
IR20x25x20,5	20	6.11
IR20x25x23	20	6.11
IR20x25x26,5	20	6.11
IR20x25x30	20	6.11
IR20x25x38,5	20	6.11
IR20X26,5X14	20	6.11
IR20X26,5X18	20	6.11
IR20X27,5X15	20	6.11
IR20X27,5X21	20	6.11
IR20x28x20	20	6.11
IR20x28x22	20	6.11
IR220X240X38	220	6.11
IR220x240x50	220	6.11
IR220X241,5X48	220	6.11
IR220x245x80	220	6.11
IR220X250X56	220	6.11
IR220X259X108	220	6.11
IR220X261X120	220	6.11
IR220X268X65	220	6.11
IR220X270X144	220	6.11
IR220X277X145	220	6.11
IR220X282X88	220	6.11
IR220X284X180	220	6.11
IR22x26x16	22	6.11
IR22x26x20	22	6.11
IR22x28x17	22	6.11
IR22x28x20	22	6.11
IR22x28x20,5	22	6.11
IR22x28x23	22	6.11
IR22x28x30	22	6.11
IR240x265x60	240	6.11
IR240x265x80	240	6.11
IR240X270X56	240	6.11
IR240X276X92	240	6.11
IR240X287X120	240	6.11
IR240X293X72	240	6.11
IR240X295X160	240	6.11
IR240X303X155	240	6.11
IR240X306X95	240	6.11
IR240X310X195	240	6.11
IR25x29x20	25	6.11
IR25x29x30	25	6.11
IR25X30,5X12	25	6.11
IR25x30x12,5	25	6.11
IR25x30x16	25	6.11
IR25x30x16,5	25	6.11
IR25x30x17	25	6.11
IR25x30x18	25	6.11
IR25x30x20	25	6.11
IR25x30x20,5	25	6.11
IR25x30x23	25	6.11
IR25x30x26,5	25	6.11
IR25x30x30	25	6.11
IR25x30x32	25	6.11
IR25x30x38,5	25	6.11
IR25X31,5X15	25	6.11
IR25X31,5X18	25	6.11
IR25x32x22	25	6.11
IR25X34X17	25	6.11
IR25x34x22	25	6.11
IR25X34X24	25	6.11
IR260X285X46	260	6.11
IR260x285x60	260	6.11
IR260X290,5X104	260	6.11
IR260x290x100	260	6.11
IR260X296X65	260	6.11
IR260X308X144	260	6.11
IR260X313X130	260	6.11
IR260X317X80	260	6.11
IR260X320X174	260	6.11
IR260X324X165	260	6.11
IR260X336X206	260	6.11
IR260X337X102	260	6.11
IR280X298X52	280	6.11
IR280X305X46	280	6.11
IR280x305x69	280	6.11
IR280x310x100	280	6.11
IR280X314X82	280	6.11
IR280X316X65	280	6.11
IR280X328X146	280	6.11
IR280X333X130	280	6.11
IR280X337X80	280	6.11
IR280X351X175	280	6.11
IR280X362X108	280	6.11
IR28x32x17	28	6.11
IR28x32x20	28	6.11
IR28x32x23	28	6.11
IR28x32x30	28	6.11
IR300X321X48	300	6.11
IR300X322X60	300	6.11
IR300x330x80	300	6.11
IR300X332X56	300	6.11
IR300x340x118	300	6.11
IR300X340X74	300	6.11
IR300X341X95	300	6.11
IR300X346X118	300	6.11
IR300X352X160	300	6.11
IR300X364X140	300	6.11
IR300X364X85	300	6.11
IR300X371X185	300	6.11
IR30x35x12,5	30	6.11
IR30x35x13	30	6.11
IR30x35x16	30	6.11
IR30x35x16,5	30	6.11
IR30x35x17	30	6.11
IR30x35x18	30	6.11
IR30x35x20	30	6.11
IR30x35x20,5	30	6.11
IR30x35x23	30	6.11
IR30x35x26	30	6.11
IR30x35x30	30	6.11
IR30X36,5X13	30	6.11
IR30X37,5X16	30	6.11
IR30X37,5X20	30	6.11
IR30x37x18	30	6.11
IR30x37x22	30	6.11
IR30X38,5X23,8	30	6.11
IR30x38x20	30	6.11
IR30X40,5X19	30	6.11
IR30X40,5X27	30	6.11
IR30x40x25	30	6.11
IR30X42X30,2	30	6.11
IR30X45X23	30	6.11
IR320X341X38	320	6.11
IR320X341X48	320	6.11
IR320X350X56	320	6.11
IR320x350x80	320	6.11
IR320x360x118	320	6.11
IR320X360X74	320	6.11
IR320X360X95	320	6.11
IR320X366X121	320	6.11
IR320X368X176	320	6.11
IR320X390X150	320	6.11
IR320X390X92	320	6.11
IR320X425X112	320	6.11
IR32x37x20	32	6.11
IR32x37x30	32	6.11
IR32x40x20	32	6.11
IR32x40x27	32	6.11
IR32x40x36	32	6.11
IR33x37x13	33	6.11
IR340X361X48	340	6.11
IR340X362X60	340	6.11
IR340X370X56	340	6.11
IR340x370x80	340	6.11
IR340X372X72	340	6.11
IR340x380x118	340	6.11
IR340X385X82	340	6.11
IR340X393X133	340	6.11
IR340X399X190	340	6.11
IR340X416X165	340	6.11
IR35x40x12,5	35	6.11
IR35x40x16,5	35	6.11
IR35x40x17	35	6.11
IR35x40x20	35	6.11
IR35x40x20,5	35	6.11
IR35x40x30	35	6.11
IR35X42X14	35	6.11
IR35x42x20	35	6.11
IR35x42x21	35	6.11
IR35x42x23	35	6.11
IR35x42x27	35	6.11
IR35x42x36	35	6.11
IR35X43,8X27	35	6.11
IR35x43x22	35	6.11
IR35X44X17	35	6.11
IR35X44X23	35	6.11
IR35X46,2X21	35	6.11
IR35X46,2X31	35	6.11
IR35X46,2X34,9	35	6.11
IR35x46x27	35	6.11
IR35X53X25	35	6.11
IR360X380X38	360	6.11
IR360x390x80	360	6.11
IR360X392X56	360	6.11
IR360X393X72	360	6.11
IR360x400x118	360	6.11
IR360X405X106	360	6.11
IR360X405X192	360	6.11

https://nppnovoteh.com

Index	d [mm]	Tab.No
IR360X405X82	360	6.11
IR360X413X134	360	6.11
IR360X437X170	360	6.11
IR360X465X224	360	6.11
IR380X405X75	380	6.11
IR380X406X46	380	6.11
IR380x415x100	380	6.11
IR380X425X106	380	6.11
IR380X425X82	380	6.11
IR380x430x140	380	6.11
IR380X433X135	380	6.11
IR380X462X175	380	6.11
IR38x43x20	38	6.11
IR38x43x30	38	6.11
IR400X426X46	400	6.11
IR400X426X75	400	6.11
IR400X435X65	400	6.11
IR400X449X118	400	6.11
IR400x450x140	400	6.11
IR400X450X148	400	6.11
IR400X450X90	400	6.11
IR40x45x16,5	40	6.11
IR40x45x17	40	6.11
IR40x45x20	40	6.11
IR40x45x20,5	40	6.11
IR40x45x30	40	6.11
IR40X47X15	40	6.11
IR40x48x22	40	6.11
IR40x48x23	40	6.11
IR40x48x30	40	6.11
IR40x48x40	40	6.11
IR40X49,3X30,16	40	6.11
IR40X49,5X18	40	6.11
IR40X49,5X23	40	6.11
IR40x50x20	40	6.11
IR40x50x22	40	6.11
IR40X50X30,2	40	6.11
IR40X52X23	40	6.11
IR40x52x28	40	6.11
IR40X52X33	40	6.11
IR40X53,5X36,5	40	6.11
IR40X58X27	40	6.11
IR420X447X46	420	6.11
IR420X448X75	420	6.11
IR420X456X65	420	6.11
IR420X458X82	420	6.11
IR420X469X118	420	6.11
IR420x470x140	420	6.11
IR420X470X150	420	6.11
IR420X470X90	420	6.11
IR420X485X224	420	6.11
IR42x47x20	42	6.11
IR42x47x30	42	6.11
IR440X464X60	440	6.11
IR440X482X118	440	6.11
IR440X482X74	440	6.11
IR440X482X95	440	6.11
IR440X487X122	440	6.11
IR440x490x160	440	6.11
IR440X493X94	440	6.11
IR440X509X226	440	6.11
IR45x50x20,5	45	6.11
IR45x50x25	45	6.11
IR45x50x25,5	45	6.11
IR45x50x35	45	6.11
IR45X52,5X16	45	6.11
IR45X52,5X19	45	6.11
IR45x52x22	45	6.11
IR45x52x23	45	6.11
IR45x52x30	45	6.11
IR45x52x40	45	6.11
IR45X54,5X19	45	6.11
IR45X54,5X23	45	6.11
IR45X55,5X30,16	45	6.11
IR45x55x20	45	6.11
IR45x55x22	45	6.11
IR45X55X30,2	45	6.11
IR45X58,5X25	45	6.11
IR45X58,5X36	45	6.11
IR45X58,5X39,7	45	6.11
IR45X64,5X29	45	6.11
IR460X489X72	460	6.11
IR460X495X95	460	6.11
IR460X500X74	460	6.11
IR460X513X128	460	6.11
IR460X516X100	460	6.11
IR460X519X163	460	6.11
IR460X529,5X240	460	6.11
IR460X554X165	460	6.11
IR460X554X212	460	6.11

Index	d [mm]	Tab.No
IR480X511X56	480	6.11
IR480X511X72	480	6.11
IR480X525X100	480	6.11
IR480X525X78	480	6.11
IR480X533X128	480	6.11
IR480X536X100	480	6.11
IR480X539X165	480	6.11
IR480X547X248	480	6.11
IR500X530X72	500	6.11
IR500X534X56	500	6.11
IR500X534X90	500	6.11
IR500X544X128	500	6.11
IR500X546X100	500	6.11
IR500X546X78	500	6.11
IR500X553X128	500	6.11
IR500X553X167	500	6.11
IR500X556X100	500	6.11
IR500X576X264	500	6.11
IR500X603X185	500	6.11
IR50x55x20	50	6.11
IR50x55x20,5	50	6.11
IR50x55x25	50	6.11
IR50x55x35	50	6.11
IR50X57,5X16	50	6.11
IR50x58x22	50	6.11
IR50x58x23	50	6.11
IR50x58x30	50	6.11
IR50x58x40	50	6.11
IR50X59,5X20	50	6.11
IR50X59,5X23	50	6.11
IR50X60,4X30,16	50	6.11
IR50X60,4X30,2	50	6.11
IR50x60x20	50	6.11
IR50x60x25	50	6.11
IR50x60x28	50	6.11
IR50x62x30	50	6.11
IR50X65X27	50	6.11
IR50X65X40	50	6.11
IR50X65X44,4	50	6.11
IR50X70,8X31	50	6.11
IR530X560,5X72	530	6.11
IR530X575X82	530	6.11
IR530X577X106	530	6.11
IR530X589X112	530	6.11
IR530X589X185	530	6.11
IR530X591X145	530	6.11
IR530X612X272	530	6.11
IR55x60x25	55	6.11
IR55x60x35	55	6.11
IR55x63x25	55	6.11
IR55x63x34	55	6.11
IR55x63x45	55	6.11
IR55X64,5X18	55	6.11
IR55x65x28	55	6.11
IR55X66,5X33,3	55	6.11
IR55X66,9X33,34	55	6.11
IR55X66X21	55	6.11
IR55X66X25	55	6.11
IR55X70,5X29	55	6.11
IR55X70,5X43	55	6.11
IR55X70,5X49,2	55	6.11
IR55X77,2X33	55	6.11
IR560X591X56	560	6.11
IR560X613X112	560	6.11
IR560X613X85	560	6.11
IR560X626X150	560	6.11
IR560X630X115	560	6.11
IR560X648X280	560	6.11
IR560X668X206	560	6.11
IR5x7x10	5	6.11
IR5x8x12	5	6.11
IR5x8x16	5	6.11
IR600X632X60	600	6.11
IR600X632X78	600	6.11
IR600X649X118	600	6.11
IR600X652X90	600	6.11
IR600X661X118	600	6.11
IR600X661X155	600	6.11
IR600X661X200	600	6.11
IR600X749X155	600	6.11
IR60x68x25	60	6.11
IR60x68x34	60	6.11
IR60x68x35	60	6.11
IR60x68x45	60	6.11
IR60X69,5X18	60	6.11
IR60x70x25	60	6.11
IR60x70x28	60	6.11
IR60X72,3X36,5	60	6.11
IR60X72X22	60	6.11
IR60X72X28	60	6.11

Index	d [mm]	Tab.No
IR60X73,5X36,5	60	6.11
IR60X77X31	60	6.11
IR60X77X46	60	6.11
IR60X77X54	60	6.11
IR60X83X35	60	6.11
IR630X667X69	630	6.11
IR630X671X88	630	6.11
IR630X689X100	630	6.11
IR630X689X128	630	6.11
IR630X699X128	630	6.11
IR630X699X170	630	6.11
IR630X699X212	630	6.11
IR630X751X230	630	6.11
IR65x72x25	65	6.11
IR65x72x34	65	6.11
IR65x72x45	65	6.11
IR65x73x25	65	6.11
IR65x73x35	65	6.11
IR65X74,5X18	65	6.11
IR65X74,5X26	65	6.11
IR65x75x28	65	6.11
IR65X78,5X23	65	6.11
IR65X78,5X31	65	6.11
IR65X79,6X38,1	65	6.11
IR65X80,4X38,1	65	6.11
IR65X82,5X33	65	6.11
IR65X82,5X48	65	6.11
IR65X83,5X58,7	65	6.11
IR65X89,3X37	65	6.11
IR670X708X69	670	6.11
IR670X728X103	670	6.11
IR670X747X136	670	6.11
IR670X747X180	670	6.11
IR670X747X230	670	6.11
IR6x10x10	6	6.11
IR6x10x12	6	6.11
IR6x8x10	6	6.11
IR6x9x12	6	6.11
IR6x9x16	6	6.11
IR70X100X42	70	6.11
IR70X80X20	70	6.11
IR70x80x25	70	6.11
IR70x80x30	70	6.11
IR70x80x35	70	6.11
IR70x80x40	70	6.11
IR70x80x54	70	6.11
IR70X83,5X24	70	6.11
IR70X83,5X31	70	6.11
IR70X84,5X39,7	70	6.11
IR70X84,8X39,69	70	6.11
IR70X89X35	70	6.11
IR70X89X51	70	6.11
IR70X90X63,5	70	6.11
IR710X751X74	710	6.11
IR710X774X106	710	6.11
IR710X774X140	710	6.11
IR710X778X140	710	6.11
IR710X778X185	710	6.11
IR750X794X78	750	6.11
IR750X830X150	750	6.11
IR750X830X195	750	6.11
IR75X104,5X45	75	6.11
IR75X85X20	75	6.11
IR75x85x25	75	6.11
IR75x85x30	75	6.11
IR75x85x35	75	6.11
IR75x85x40	75	6.11
IR75x85x54	75	6.11
IR75X88,5X25	75	6.11
IR75X88,5X31	75	6.11
IR75X88,5X41,3	75	6.11
IR75X89X41,28	75	6.11
IR75X95,5X68,3	75	6.11
IR75X95X37	75	6.11
IR75X95X55	75	6.11
IR7x10x10,5	7	6.11
IR7x10x12	7	6.11
IR7x10x16	7	6.11
IR7x9x10	7	6.11
IR800X846X82	800	6.11
IR800X882X200	800	6.11
IR800X890X155	800	6.11
IR80X101X39	80	6.11
IR80X101X58	80	6.11
IR80X103X68,3	80	6.11
IR80X110X48	80	6.11
IR80x90x25	80	6.11
IR80x90x30	80	6.11
IR80x90x35	80	6.11
IR80x90x40	80	6.11

Index	d [mm]	Tab.No
IR80x90x54	80	6.11
IR80X91,5X22	80	6.11
IR80X95,2X44,45	80	6.11
IR80X95,3X26	80	6.11
IR80X95,3X33	80	6.11
IR80X95,3X44,4	80	6.11
IR850X900X106	850	6.11
IR850X917X118	850	6.11
IR85X100,5X28	85	6.11
IR85X100,5X36	85	6.11
IR85x100x35	85	6.11
IR85x100x46	85	6.11
IR85x100x63	85	6.11
IR85X101,8X49,2	85	6.11
IR85X102X49,21	85	6.11
IR85X108X41	85	6.11
IR85X108X60	85	6.11
IR85X108X73	85	6.11
IR85X113X52	85	6.11
IR85x95x26	85	6.11
IR85x95x36	85	6.11
IR85X96,5X22	85	6.11
IR8x10x11	8	6.11
IR8x12x10	8	6.11
IR8x12x10,5	8	6.11
IR8x12x12	8	6.11
IR8x12x12,5	8	6.11
IR900X949X112	900	6.11
IR900X949X85	900	6.11
IR900X969X122	900	6.11
IR900X969X165	900	6.11
IR90x100x26	90	6.11
IR90x100x30	90	6.11
IR90x100x36	90	6.11
IR90X103X24	90	6.11
IR90x105x35	90	6.11
IR90x105x46	90	6.11
IR90x105x63	90	6.11
IR90X107,2X52,4	90	6.11
IR90X107X30	90	6.11
IR90X107X40	90	6.11
IR90X107X52,4	90	6.11
IR90X113,5X43	90	6.11
IR90X113,5X64	90	6.11
IR90X115X73	90	6.11
IR90X123,5X54	90	6.11
IR950X1002X150	950	6.11
IR950X1024X175	950	6.11
IR95x105x26	95	6.11
IR95x105x36	95	6.11
IR95X108X24	95	6.11
IR95x10x63	95	6.11
IR95x110x35	95	6.11
IR95x110x46	95	6.11
IR95x110x63	95	6.11
IR95X112,5X32	95	6.11
IR95X112,5X43	95	6.11
IR95X113,5X55,56	95	6.11
IR95X113,5X55,6	95	6.11
IR95X121,5X45	95	6.11
IR95X121,5X67	95	6.11
IR95X121,5X77,8	95	6.11
IR95X133,5X55	95	6.11
IR9x12x11	9	6.11
IR9x12x12	9	6.11
IR9x12x16	9	6.11
J15585/20	28	4.2
J16154/85	39	4.2
J6392/27	65	4.2
J90354/48	90	4.2
JD6549/10	65	4.2
JF4049/10	40	4.2
JF6049/10	60	4.2
JF7049/10	70	4.2
JF7049A/10	70	4.2
JF9549/10	95	4.2
JH211749/10	65	4.2
JH211749A/10	65	4.2
JH217249/10	85	4.2
JH307749/10	55	4.2
JH415647/10	75	4.2
JH429149/10	130	4.2
JH913848/11	70	4.2
JHH221436/13	90	4.2
JHH224333/15	100	4.2
JHM133449/17	160	4.2
JHM318448/10	90	4.2
JHM33449/10	24	4.2
JHM516849/10	85	4.2
JHM522649/10	110	4.2

Index	d [mm]	Tab.No
JHM534149/10	170	4.2
JHM720249/10	100	4.2
JHM807045/12	50	4.2
JHM840449/10	200	4.2
JHM88540/13	30	4.2
JL69345/10	38	4.2
JL69349/10	38	4.2
JL69349A/10	38	4.2
JL724348/14	120	4.2
JL725346/16	125	4.2
JL730646/12	150	4.2
JL819349/10	95	4.2
JLM104948/10	50	4.2
JLM506849/10	55	4.2
JLM508748/10	60	4.2
JLM704649/10	50	4.2
JLM710949/10	65	4.2
JLM710949C/10	65	4.2
JLM714149/10	75	4.2
JLM722948/12	115	4.2
JLM813049/10	70	4.2
JLM820048/12	100	4.2
JM205149/10	50	4.2
JM205149A/10	50	4.2
JM207049/10	55	4.2
JM207049A/10	55	4.2
JM511946/10	65	4.2
JM515649/10	80	4.2
JM612949/10	70	4.2
JM624649/10	120	4.2
JM714249/10	75	4.2
JM714249A/10	75	4.2
JM716648/10	85	4.2
JM716649/10	85	4.2
JM718149/10	90	4.2
JM718149A/10	90	4.2
JM719149/13	95	4.2
JM720249/10	100	4.2
JM734445/10	160	4.2
JM734449/10	170	4.2
JM736149/10	180	4.2
JM738249/10	190	4.2
JM738249A/10	190	4.2
JM822049/10	110	4.2
JP10044/10	95	4.2
JP10049/10	100	4.2
JP10049A/10	100	4.2
JP12049/10	120	4.2
JP12049A/10	120	4.2
JP13049/10	130	4.2
JP13049A/10	130	4.2
JP14049/10	140	4.2
JP16049/10	160	4.2
JP17049/10	170	4.2
JP18049/10	180	4.2
JP6049/10	60	4.2
JP7049/10	70	4.2
JP8049/10	80	4.2
JS3549A/10	35	4.2
JW4549/10	45	4.2
JW5049/10	50	4.2
JW5549/10	55	4.2
JW6049/10	60	4.2
JW6549/10	65	4.2
JW7049/10	70	4.2
JW7549/10	75	4.2
JW8049/10	80	4.2
K03x05x09	3	6.3
K03x06x07	3	6.3
K04x07x07	4	6.3
K04x07x10	4	6.3
K05x08x08	5	6.3
K05x08x10	5	6.3
K05X09X10	5	6.3
K05x09x13	5	6.3
K06x09x08	6	6.3
K06x09x10	6	6.3
K06x10x13	6	6.3
K07x10x08	7	6.3
K07x10x10	7	6.3
K08x11x08	8	6.3
K08x11x10	8	6.3
K08x11x13	8	6.3
K08x12x10	8	6.3
K09x12x10	9	6.3
K09x12x13	9	6.3
K100X107X20	100	6.3
K100x107x21	100	6.3
K100X107X30	100	6.3
K100x108x27	100	6.3

https://nppnovoteh.com

23. INDEX

Index	d [mm]	Tab.No
K100x108x30	100	6.3
K100X109X30	100	6.3
K105X112X20	105	6.3
K105x112x21	105	6.3
K105x113x30	105	6.3
K105X115X30	105	6.3
K10X13X08	10	6.3
K10x13x10	10	6.3
K10x13x13	10	6.3
K10x13x16	10	6.3
K10x14x10	10	6.3
K10x14x13	10	6.3
K10X14X17	10	6.3
K10x16x12	10	6.3
K110x117x24	110	6.3
K110X117X25	110	6.3
K110X117X35	110	6.3
K110x118x30	110	6.3
K110X120X30	110	6.3
K115X122X25	115	6.3
K115X122X35	115	6.3
K115x123x27	115	6.3
K115X125X35	115	6.3
K11x14x10	11	6.3
K120x127x24	120	6.3
K120X127X25	120	6.3
K120X127X35	120	6.3
K125x133x35	125	6.3
K125X135X35	125	6.3
K12X15X08	12	6.3
K12x15x09	12	6.3
K12x15x10	12	6.3
K12x15x13	12	6.3
K12X15X17	12	6.3
K12x15x20	12	6.3
K12x16x10	12	6.3
K12x16x13	12	6.3
K12X16X17	12	6.3
K12x17x13	12	6.3
K12x17x14	12	6.3
K12x18x12	12	6.3
K130x137x24	130	6.3
K130X137X25	130	6.3
K130X137X35	130	6.3
K135x143x35	135	6.3
K13x18x15	13	6.3
K145x153x26	145	6.3
K145X153X30	145	6.3
K145x153x36	145	6.3
K14x17x17	14	6.3
K14x18x10	14	6.3
K14X18X13	14	6.3
K14x18x13	14	6.3
K14x18x14	14	6.3
K14x18x15	14	6.3
K14x18x17	14	6.3
K14X19X10	14	6.3
K14X19X13	14	6.3
K14X19X17	14	6.3
K14x20x12	14	6.3
K14X20X17	14	6.3
K150x160x46	150	6.3
K155x163x26	155	6.3
K155X163X30	155	6.3
K155x163x36	155	6.3
K15x18x14	15	6.3
K15x18x16	15	6.3
K15x18x17	15	6.3
K15x18x22	15	6.3
K15x19x10	15	6.3
K15x19x13	15	6.3
K15x19x17	15	6.3
K15x19x24	15	6.3
K15X20X10	15	6.3
K15x20x13	15	6.3
K15X20X17	15	6.3
K15x21x15	15	6.3
K15X21X17	15	6.3
K15x21x21	15	6.3
K160x170x46	160	6.3
K165x173x26	165	6.3
K165X173X35	165	6.3
K16x20x10	16	6.3
K16x20x13	16	6.3
K16x20x17	16	6.3
K16x20x20	16	6.3
K16x22x12	16	6.3
K16x22x13	16	6.3
K16x22x16	16	6.3
K16X22X17	16	6.3
K16x22x20	16	6.3
K16x24x20	16	6.3
K170x180x46	170	6.3
K175x183x32	175	6.3
K175X183X35	175	6.3
K17x21x10	17	6.3
K17x21x13	17	6.3
K17x21x15	17	6.3
K17x21x17	17	6.3
K17x22x20	17	6.3
K17x23x15	17	6.3
K17X23X17	17	6.3
K17X23X20	17	6.3
K185x195x37	185	6.3
K185X195X40	185	6.3
K18x22x10	18	6.3
K18x22x13	18	6.3
K18x22x14	18	6.3
K18x22x17	18	6.3
K18x23x20	18	6.3
K18x24x12	18	6.3
K18x24x13	18	6.3
K18X24X17	18	6.3
K18x24x20	18	6.3
K18X24X30	18	6.3
K18x25x14	18	6.3
K18x25x22	18	6.3
K18x26x20	18	6.3
K18x28x16	18	6.3
K195X202X40	195	6.3
K195x205x37	195	6.3
K19x23x13	19	6.3
K19x23x17	19	6.3
K20x24x10	20	6.3
K20x24x12	20	6.3
K20x24x13	20	6.3
K20x24x17	20	6.3
K20x26x12	20	6.3
K20x26x13	20	6.3
K20x26x17	20	6.3
K20x26x20	20	6.3
K20x28x16	20	6.3
K20x28x20	20	6.3
K20x28x25	20	6.3
K20x30x30	20	6.3
K210x220x42	210	6.3
K21x25x13	21	6.3
K21x25x17	21	6.3
K220x230x42	220	6.3
K22x26x10	22	6.3
K22x26x13	22	6.3
K22x26x17	22	6.3
K22x27x17	22	6.3
K22x28x13	22	6.3
K22x28x17	22	6.3
K22X28X20	22	6.3
K22x29x16	22	6.3
K22x30x15	22	6.3
K22x32x24	22	6.3
K22x32x30	22	6.3
K23x28x24	23	6.3
K23x35x16	23	6.3
K240x250x42	240	6.3
K24x28x10	24	6.3
K24x28x13	24	6.3
K24x28x16	24	6.3
K24x28x17	24	6.3
K24x29x13	24	6.3
K24x30x17	24	6.3
K24x30x22	24	6.3
K25x29x10	25	6.3
K25x29x13	25	6.3
K25x29x17	25	6.3
K25x30x10	25	6.3
K25x30x13	25	6.3
K25x30x17	25	6.3
K25x30x20	25	6.3
K25x31x14	25	6.3
K25x31x17	25	6.3
K25X31X20	25	6.3
K25x31x21	25	6.3
K25x31x24	25	6.3
K25x32x15	25	6.3
K25x32x16	25	6.3
K25x33x20	25	6.3
K25x33x24	25	6.3
K25x33x25	25	6.3
K25x35x30	25	6.3
K265x280x50	265	6.3
K26x30x10	26	6.3
K26x30x13	26	6.3
K26x30x17	26	6.3
K26x31x13	26	6.3
K28x32x21	28	6.3
K28x33x13	28	6.3
K28x33x17	28	6.3
K28x33x27	28	6.3
K28x34x17	28	6.3
K28x34x20	28	6.3
K28x35x16	28	6.3
K28x35x18	28	6.3
K28x35x27	28	6.3
K28x36x20	28	6.3
K29x34x27	29	6.3
K30x34x13	30	6.3
K30x35x13	30	6.3
K30x35x17	30	6.3
K30x35x20	30	6.3
K30x35x23	30	6.3
K30x35x27	30	6.3
K30x37x16	30	6.3
K30x37x18	30	6.3
K30X37X20	30	6.3
K30X38X20	30	6.3
K30x40x18	30	6.3
K30x40x30	30	6.3
K30x42x30	30	6.3
K32x36x15	32	6.3
K32x37x13	32	6.3
K32x37x17	32	6.3
K32x37x27	32	6.3
K32x37x28	32	6.3
K32x38x16	32	6.3
K32x38x20	32	6.3
K32x38x26	32	6.3
K32x39x14	32	6.3
K32x39x16	32	6.3
K32x39x18	32	6.3
K32X39X20	32	6.3
K32X39X30	32	6.3
K32x40x25	32	6.3
K32x40x36	32	6.3
K32x42x42	32	6.3
K32x46x32	32	6.3
K34x44x26	34	6.3
K35x40x13	35	6.3
K35x40x17	35	6.3
K35x40x19	35	6.3
K35x40x25	35	6.3
K35x40x27	35	6.3
K35x42x16	35	6.3
K35x42x18	35	6.3
K35x42x20	35	6.3
K35x42x30	35	6.3
K35x43x18	35	6.3
K35x45x20	35	6.3
K35x45x30	35	6.3
K35x45x41	35	6.3
K35x45x49	35	6.3
K36x42x16	36	6.3
K37x42x17	37	6.3
K37x42x27	37	6.3
K37x44x19	37	6.3
K37x45x26	37	6.3
K38X43X13	38	6.3
K38x43x17	38	6.3
K38x43x27	38	6.3
K38x46x20	38	6.3
K38x46x32	38	6.3
K38x50x33	38	6.3
K39x44x24	39	6.3
K40x44x13	40	6.3
K40x45x13	40	6.3
K40x45x17	40	6.3
K40x45x21	40	6.3
K40x45x27	40	6.3
K40x46x17	40	6.3
K40x47x17	40	6.3
K40x47x20	40	6.3
K40x48x20	40	6.3
K42x47x13	42	6.3
K42x47x17	42	6.3
K42x47x25	42	6.3
K42x47x27	42	6.3
K42x50x18	42	6.3
K42x50x20	42	6.3
K43x48x17	43	6.3
K43x48x27	43	6.3
K43x50x18	43	6.3
K45x49x19	45	6.3
K45x50x13	45	6.3
K45x50x17	45	6.3
K45x50x27	45	6.3
K45x50x32	45	6.3
K45x52x18	45	6.3
K45x52x21	45	6.3
K45x53x20	45	6.3
K45x53x21	45	6.3
K45x53x22	45	6.3
K45x53x28	45	6.3
K47x52x17	47	6.3
K47x52x27	47	6.3
K47x53x25	47	6.3
K47x55x26	47	6.3
K47x55x28	47	6.3
K48x53x17	48	6.3
K48x54x19	48	6.3
K49x65x38	46	6.3
K50x55x13,5	50	6.3
K50x55x17	50	6.3
K50x55x20	50	6.3
K50x55x30	50	6.3
K50x57x18	50	6.3
K50x58x20	50	6.3
K50x58x25	50	6.3
K50x58x35	50	6.3
K52x57x12	52	6.3
K52X57X17	52	6.3
K52X57X20	52	6.3
K52X60X20	52	6.3
K52x60x24	52	6.3
K52X60X30	52	6.3
K55x60x13	55	6.3
K55x60x17	55	6.3
K55x60x20	55	6.3
K55x60x27	55	6.3
K55x60x30	55	6.3
K55X61X20	55	6.3
K55X61X30	55	6.3
K55x62x18	55	6.3
K55X62X40	55	6.3
K55x63x15	55	6.3
K55x63x20	55	6.3
K55x63x25	55	6.3
K55X63X30	55	6.3
K55x63x32	55	6.3
K56x61x20	56	6.3
K58x63x17	58	6.3
K58x64x19	58	6.3
K58x65x18	58	6.3
K58X66X20	58	6.3
K58X66X30	58	6.3
K60x65x20	60	6.3
K60x65x30	60	6.3
K60X66X20	60	6.3
K60X66X30	60	6.3
K60x68x20	60	6.3
K60x68x23	60	6.3
K60x68x25	60	6.3
K60X68X25	60	6.3
K60x68x27	60	6.3
K60x75x42	60	6.3
K6200 2RS	10	14.1
K6201 2RS	12	14.1
K6202 2RS	15	14.1
K6203 2RS	17	14.1
K6204 2RS	20	14.1
K6205 2RS	25	14.1
K6206 2RS	30	14.1
K6207 2RS	35	14.1
K6208 2RS	40	14.1
K6209 2RS	45	14.1
K6210 2RS	50	14.1
K63x70x21	63	6.3
K63x71x20	63	6.3
K63X71X25	63	6.3
K63X71X30	63	6.3
K64x70x16	64	6.3
K65x70x20	65	6.3
K65x70x30	65	6.3
K65X73X20	65	6.3
K65x73x23	65	6.3
K65X73X25	65	6.3
K65x73x30	65	6.3
K68x74x20	68	6.3
K68x74x30	68	6.3
K68X76X20	68	6.3
K68X76X25	68	6.3
K68X76X30	68	6.3
K70x76x20	70	6.3
K70x76x30	70	6.3
K70X78X20	70	6.3
K70x78x25	70	6.3
K70x78x30	70	6.3
K70x80x30	70	6.3
K72X78X20	72	6.3
K72X78X30	72	6.3
K72x80x20	72	6.3
K72X80X25	72	6.3
K72X80X30	72	6.3
K73x79x20	73	6.3
K75x81x20	75	6.3
K75x81x30	75	6.3
K75X83X20	75	6.3
K75x83x23	75	6.3
K75X83X25	75	6.3
K75x83x30	75	6.3
K80x86x20	80	6.3
K80x86x30	80	6.3
K80X88X25	80	6.3
K80x88x30	80	6.3
K80X88X35	80	6.3
K81102	15	10.1
K81103	17	10.1
K81104	20	10.1
K81105	25	10.1
K81106	30	10.1
K81107	35	10.1
K81108	40	10.1
K81109	45	10.1
K81110	50	10.1
K81111	55	10.1
K81112	60	10.1
K81113	65	10.1
K81114	70	10.1
K81115	75	10.1
K81116	80	10.1
K81117	85	10.1
K81118	90	10.1
K81120	100	10.1
K81122	110	10.1
K81124	120	10.1
K81126	130	10.1
K81128	140	10.1
K81130	150	10.1
K81132	160	10.1
K81134	170	10.1
K81136	180	10.1
K81138	190	10.1
K81140	200	10.1
K81144	220	10.1
K81148	240	10.1
K81152	260	10.1
K81156	280	10.1
K81160	300	10.1
K81164	320	10.1
K81168	340	10.1
K81172	360	10.1
K81176	380	10.1
K81180	400	10.1
K81184	420	10.1
K81188	440	10.1
K81192	460	10.1
K81196	480	10.1
K81206	30	10.1
K81207	35	10.1
K81208	40	10.1
K81209	45	10.1
K81210	50	10.1
K81211	55	10.1
K81212	60	10.1
K81213	65	10.1
K81214	70	10.1
K81215	75	10.1
K81216	80	10.1
K81217	85	10.1
K81218	90	10.1
K81220	100	10.1
K81222	110	10.1
K81224	120	10.1
K81226	130	10.1
K81228	140	10.1
K81230	150	10.1
K81232	160	10.1
K81234	170	10.1
K81236	180	10.1
K81238	190	10.1
K81240	200	10.1
K81244	220	10.1
K81248	240	10.1

https://nppnovoteh.com

Index	d [mm]	Tab.No
K81252	260	10.1
K81256	280	10.1
K81260	300	10.1
K81264	320	10.1
K81268	340	10.1
K81272	360	10.1
K81276	380	10.1
K81280	400	10.1
K81284	420	10.1
K81288	440	10.1
K81292	460	10.1
K81296	480	10.1
K85x92x20	85	6.3
K85X92X30	85	6.3
K85X93X20	85	6.3
K85x93x25	85	6.3
K85x93x30	85	6.3
K85X95X45	85	6.3
K89306	30	10.1
K89307	35	10.1
K89308	40	10.1
K89309	45	10.1
K89310	50	10.1
K89311	55	10.1
K89312	60	10.1
K89313	65	10.1
K89314	70	10.1
K89315	75	10.1
K89316	80	10.1
K89317	85	10.1
K89318	90	10.1
K89320	100	10.1
K89322	110	10.1
K89324	120	10.1
K89326	130	10.1
K89328	140	10.1
K89330	150	10.1
K89412	60	10.1
K89413	65	10.1
K89414	70	10.1
K89415	75	10.1
K89416	80	10.1
K89417	85	10.1
K89418	90	10.1
K89420	100	10.1
K89422	110	10.1
K89424	120	10.1
K89426	130	10.1
K89428	140	10.1
K89430	150	10.1
K89432	160	10.1
K89434	170	10.1
K89436	180	10.1
K89438	190	10.1
K89440	200	10.1
K89444	220	10.1
K89448	240	10.1
K89452	260	10.1
K89456	280	10.1
K89460	300	10.1
K89464	320	10.1
K90x97x20	90	6.3
K90X97X30	90	6.3
K90x98x25	90	6.3
K90x98x27	90	6.3
K90x98x30	90	6.3
K95X102X20	95	6.3
K95X102X30	95	6.3
K95x103x30	95	6.3
KB0825 AJ	8	16.1
KB0825 UU	8	16.1
KB1232 AJ	12	16.1
KB1232 OP	12	16.1
KB1232 UU	12	16.1
KB1636 AJ	16	16.1
KB1636 OP	16	16.1
KB1636 UU	16	16.1
KB2045 AJ	20	16.1
KB2045 OP	20	16.1
KB2045 UU	20	16.1
KB2558 AJ	25	16.1
KB2558 OP	25	16.1
KB2558 UU	25	16.1
KB3068 AJ	30	16.1
KB3068 OP	30	16.1
KB3068 UU	30	16.1
KB4080 AJ	40	16.1
KB4080 OP	40	16.1
KB4080 UU	40	16.1
KB50100 AJ	50	16.1

Index	d [mm]	Tab.No
KB50100 OP	50	16.1
KB50100 UU	50	16.1
KBK10X13X14,5	10	6.4
KBK10X14X13	10	6.4
KBK12X15X13	12	6.4
KBK12X15X15	12	6.4
KBK12X15X17,5	12	6.4
KBK12X16X13	12	6.4
KBK12X16X16	12	6.4
KBK13X17X14,5	13	6.4
KBK13X17X17,5	13	6.4
KBK14X18X13	14	6.4
KBK14X18X14,5	14	6.4
KBK14X18X17	14	6.4
KBK14X18X21	14	6.4
KBK15X19X20	15	6.4
KBK16X20X20	16	6.4
KBK18X22X22	18	6.4
KBK18X22X24	18	6.4
KBK18X22X25	18	6.4
KBK20X24X30	20	6.4
KBK20X25X32	20	6.4
KBK9X13X12,5	9	6.4
KH0622 PP	6	16.1
KH0824 PP	8	16.1
KH1026 PP	10	16.1
KH1228 PP	12	16.1
KH1428 PP	14	16.1
KH1630 PP	16	16.1
KH2030 PP	20	16.1
KH2540 PP	25	16.1
KH3050 PP	30	16.1
KH4060 PP	40	16.1
KH5070 PP	50	16.1
KK12x15x20	12	6.3
KK15x18x22	15	6.3
KK15x19x24	15	6.3
KK22x27x40	22	6.3
KK24x30x31	24	6.3
KK25x30x26	25	6.3
KK26x30x22	26	6.3
KK30x35x26	30	6.3
KK32x40x42	32	6.3
KK35x40x26	35	6.3
KK35x40x30	35	6.3
KK35x40x32	35	6.3
KK37x42x28	37	6.3
KK39x44x26	39	6.3
KK40x45x30	40	6.3
KK42x47x30	42	6.3
KK45x51x36	45	6.3
KK55x60x40	55	6.3
KK55x63x32	55	6.3
KK58x65x36	58	6.3
KK60x66x33	60	6.3
KK60x66x40	60	6.3
KK60x68x30	60	6.3
KK60x68x34	60	6.3
KK62x70x40	62	6.3
KK68x74x35	68	6.3
KK68x75x32	68	6.3
KK70x78x46	70	6.3
KK75x83x35	75	6.3
KK75x83x46	75	6.3
KK80x88x40	80	6.3
KK80x88x46	80	6.3
KM00	10	18.3
KM01	12	18.3
KM02	15	18.3
KM03	17	18.3
KM04	20	18.3
KM05	25	18.3
KM06	30	18.3
KM07	35	18.3
KM08	40	18.3
KM09	45	18.3
KM10	50	18.3
KM11	55	18.3
KM12	60	18.3
KM13	65	18.3
KM14	70	18.3
KM15	75	18.3
KM16	80	18.3
KM17	85	18.3
KM18	90	18.3
KM19	95	18.3
KM20	100	18.3
KM21	105	18.3
KM22	110	18.3
KM23	115	18.3

Index	d [mm]	Tab.No
KM24	120	18.3
KM25	125	18.3
KM26	130	18.3
KM27	135	18.3
KM28	140	18.3
KM29	145	18.3
KM30	150	18.3
KM31	155	18.3
KM32	160	18.3
KM33	165	18.3
KM34	170	18.3
KM36	180	18.3
KM38	190	18.3
KM40	200	18.3
KML24	120	18.3
KML26	130	18.3
KML28	140	18.3
KML30	150	18.3
KML32	160	18.3
KML34	170	18.3
KML36	180	18.3
KML38	190	18.3
KML40	200	18.3
KMT 0	10	18.5
KMT 1	12	18.5
KMT 10	50	18.5
KMT 11	55	18.5
KMT 12	60	18.5
KMT 13	65	18.5
KMT 14	70	18.5
KMT 15	75	18.5
KMT 16	80	18.5
KMT 17	85	18.5
KMT 18	90	18.5
KMT 19	95	18.5
KMT 2	15	18.5
KMT 20	100	18.5
KMT 22	110	18.5
KMT 24	120	18.5
KMT 26	130	18.5
KMT 28	140	18.5
KMT 3	17	18.5
KMT 30	150	18.5
KMT 32	160	18.5
KMT 34	170	18.5
KMT 36	180	18.5
KMT 38	190	18.5
KMT 4	20	18.5
KMT 40	200	18.5
KMT 5	25	18.5
KMT 6	30	18.5
KMT 7	35	18.5
KMT 8	40	18.5
KMT 9	45	18.5
KMTA 10	50	18.6
KMTA 11	55	18.6
KMTA 12	60	18.6
KMTA 13	65	18.6
KMTA 14	70	18.6
KMTA 15	75	18.6
KMTA 16	80	18.6
KMTA 17	85	18.6
KMTA 18	90	18.6
KMTA 19	95	18.6
KMTA 20	100	18.6
KMTA 22	110	18.6
KMTA 24	120	18.6
KMTA 26	130	18.6
KMTA 28	140	18.6
KMTA 30	150	18.6
KMTA 32	160	18.6
KMTA 34	170	18.6
KMTA 36	180	18.6
KMTA 38	190	18.6
KMTA 40	200	18.6
KMTA 5	25	18.6
KMTA 6	30	18.6
KMTA 7	35	18.6
KMTA 8	40	18.6
KMTA 9	45	18.6
KR16	16	13.4
KR19	19	13.4
KR22	22	13.4
KR26	26	13.4
KR30	30	13.4
KR32	32	13.4
KR35	35	13.4
KR40	40	13.4
KR47	47	13.4
KR52	52	13.4

Index	d [mm]	Tab.No
KR62	62	13.4
KR72	72	13.4
KR80	80	13.4
KR90	90	13.4
KRV16	16	13.4
KRV19	19	13.4
KRV22	22	13.4
KRV26	26	13.4
KRV30	30	13.4
KRV32	32	13.4
KRV35	35	13.4
KRV40	40	13.4
KRV47	47	13.4
KRV52	52	13.4
KRV62	62	13.4
KRV72	72	13.4
KRV80	80	13.4
KRV90	90	13.4
KZK12X16X10	12	6.4
KZK12X17X10	12	6.4
KZK14X18X10	14	6.4
KZK16X21X10	16	6.4
KZK16X22X12	16	6.4
KZK18X24X12	18	6.4
KZK18X24X13	18	6.4
KZK18X24X15	18	6.4
KZK20X26X12	20	6.4
KZK20X26X17	20	6.4
KZK22X28X13	22	6.4
KZK22X28X16	22	6.4
KZK22X29X15	22	6.4
KZK22X29X16	22	6.4
KZK25X32X16	25	6.4
KZK28X35X16	28	6.4
KZK30X37X16	30	6.4
KZK35X42X20	35	6.4
KZK40X48X20	40	6.4
L102849/10	44,45	4.2
L116149/10	82,55	4.2
L163149/10	355,6	4.2
L17	17	1.5
L183448/10	759,925	4.2
L183449/10	762	4.2
L20	20	1.5
L21549/11	15,875	4.2
L217849/10	88,9	4.2
L225842/10	120,65	4.2
L225849/10	127	4.2
L225849/18	127	4.2
L25	25	1.5
L281148/10	660,4	4.2
L30	30	1.5
L305649/10	50,8	4.2
L319249/10	95,25	4.2
L327249/10	133,35	4.2
L357049/10	304,8	4.2
L420449/10	101,6	4.2
L432349/10	158,75	4.2
L433749/10	165,1	4.2
L435049/10	171,45	4.2
L44640/10	23,812	4.2
L44642/10	25,4	4.2
L44643/10	25,4	4.2
L44649/10	26,988	4.2
L45449/10	29	4.2
L467549/10	406,4	4.2
L476549/10	549,275	4.2
L507949/10	57,15	4.2
L521945/10	101,6	4.2
L521949/10	107,95	4.2
L521949/14	107,95	4.2
L540049/10	196,85	4.2
L55249/10	292,1	4.2
L555233/10	279,4	4.2
L570649/10	457,2	4.2
L580049/10	609,6	4.2
L610549/10	63,5	4.2
L623149/10	114,3	4.2
L624549/10	120,65	4.2
L630349/10	152,4	4.2
L68149/11	34,988	4.2
L713049/10	69,85	4.2
L730649/10	152,4	4.2
L812147/11	66,675	4.2
L812148/11	66,675	4.2
L814749/10	76,2	4.2
L826949/14	133,35	4.2
L853049/10	276,225	4.2
L860048/10	330,2	4.2
L860049/10	330,2	4.2

Index	d [mm]	Tab.No
L865547/12	381	4.2
L879946/10	609,396	4.2
L879947/10	609,6	4.2
L910349/10	63,487	4.2
LL103049/10	44,45	4.2
LL205449/10	50,8	4.2
LL217849/10	88,9	4.2
LL225749/10	127	4.2
LL244549/10	231,775	4.2
LL264648/10	374,65	4.2
LL319349/10	95,25	4.2
LL327049/10	133,35	4.2
LL352149/10	279,4	4.2
LL365348/10	384,175	4.2
LL382149/10	698,5	4.2
LL420549/10	101,6	4.2
LL428349/10	139,7	4.2
LL481448/11	673,1	4.2
LL483449/18	759,925	4.2
LL483449/18	762	4.2
LL510749/10	63,5	4.2
LL52549/10	22,225	4.2
LL529749/10	146,05	4.2
LL537649/10	184,15	4.2
LL562749/10	361,95	4.2
LL566848/10	403,225	4.2
LL575343/10	533,4	4.2
LL575349/10	539,75	4.2
LL584449/10	801,688	4.2
LL639249/10	196,85	4.2
LL641149/10	203,2	4.2
LL648449/15	254	4.2
LL687949/10	977,9	4.2
LL713149/10	69,85	4.2
LL714649/10	76,2	4.2
LL735449/10	177,8	4.2
LL758744/15	323,85	4.2
LL762649/10	361,95	4.2
LL771948/11	476,25	4.2
LL777148/10	571,5	4.2
LL778149/10	584,2	4.2
LL788345/10	1063,625	4.2
LL788349/10	1066,8	4.2
LL789749/10	1689,1	4.2
LL889049/10	1270	4.2
LL957049/10	312,738	4.2
LM 06 AJ	6	16.1
LM 06 OP	6	16.1
LM 06 UU	6	16.1
LM 08 AJ	8	16.1
LM 08 OP	8	16.1
LM 08 UU	8	16.1
LM 10 AJ	10	16.1
LM 10 OP	10	16.1
LM 10 UU	10	16.1
LM 12 AJ	12	16.1
LM 12 OP	12	16.1
LM 12 UU	12	16.1
LM 13 AJ	13	16.1
LM 13 OP	13	16.1
LM 13 UU	13	16.1
LM 16 AJ	16	16.1
LM 16 OP	16	16.1
LM 16 UU	16	16.1
LM 20 AJ	20	16.1
LM 20 OP	20	16.1
LM 20 UU	20	16.1
LM 25 AJ	25	16.1
LM 25 OP	25	16.1
LM 25 UU	25	16.1
LM 30 AJ	30	16.1
LM 30 OP	30	16.1
LM 30 UU	30	16.1
LM 35 AJ	35	16.1
LM 35 OP	35	16.1
LM 35 UU	35	16.1
LM 40 AJ	40	16.1
LM 40 OP	40	16.1
LM 40 UU	40	16.1
LM 50 AJ	50	16.1
LM 50 OP	50	16.1
LM 50 UU	50	16.1
LM 60 AJ	60	16.1
LM 60 OP	60	16.1
LM 60 UU	60	16.1
LM 80 AJ	80	16.1
LM 80 OP	80	16.1
LM 80 UU	80	16.1
LM102949/10	45,242	4.2
LM104947A/11	49,987	4.2

https://nppnovoteh.com

23. INDEX

Index	d [mm]	Tab.No
LM104949/11	50,8	4.2
LM104949/12	50,8	4.2
LM11749/10	17,462	4.2
LM11949/10	19,05	4.2
LM12749/10	21,986	4.2
LM12749/11	21,986	4.2
LM229139/10	136,525	4.2
LM229146/10	142,875	4.2
LM236749/10A	184,15	4.2
LM241149/10	203,2	4.2
LM245848/10	231,775	4.2
LM272235/10	457,2	4.2
LM272249/10	482,6	4.2
LM283649/10	749,3	4.2
LM29748/10	38,1	4.2
LM29749/10	38,1	4.2
LM29749/11	38,1	4.2
LM300849/11	40,988	4.2
LM328448/10	139,7	4.2
LM330448/10	152,4	4.2
LM361649/10	342,9	4.2
LM377449/10	558,8	4.2
LM446349/10	234,95	4.2
LM451345/10	263,525	4.2
LM451349/10	266,7	4.2
LM451349A/10	266,7	4.2
LM451349AX/10	266,7	4.2
LM48545/10	35,128	4.2
LM48548/10	34,925	4.2
LM48548A/10	34,925	4.2
LM501349/10	41,275	4.2
LM501349/14	41,275	4.2
LM503349/10	45,987	4.2
LM503349A/10	45,987	4.2
LM522546/10	107,95	4.2
LM522548/10	109,987	4.2
LM522549/10	109,987	4.2
LM545849/10	234,95	4.2
LM565943/10	374,65	4.2
LM565949/10	381	4.2
LM565949/12	381	4.2
LM567949/10	406,4	4.2
LM603049/11	45,242	4.2
LM603049/12	45,242	4.2
LM603049/14	45,242	4.2
LM613449/10	69,85	4.2
LM654642/10	279,982	4.2
LM654649/10	285,75	4.2
LM665949/10	385,762	4.2
LM67048/10	31,75	4.2
LM718947/10	91,973	4.2
LM720648/10	101,6	4.2
LM72849/10	22,606	4.2
LM739749/10	196,85	4.2
LM739749/19	196,85	4.2
LM742745/10	212,725	4.2
LM742747/10	216,408	4.2
LM742749/10	215,9	4.2
LM757049/10	304,8	4.2
LM770949/10	457,2	4.2
LM772748/10	488,95	4.2
LM78349/10A	34,988	4.2
LM78349/10C	34,988	4.2
LM78349A/10A	34,988	4.2
LM78349A/10C	34,988	4.2
LM805549/10	53,975	4.2
LM814849/10	77,788	4.2
LM844049/10	223,838	4.2
LM869448/10	431,8	4.2
LM921845/10	101,6	4.2
LM961548/11	342,9	4.2
LS0619	6	11.1
LS0821	8	11.1
LS100135	100	11.1
LS1024	10	11.1
LS110145	110	11.1
LS120155	120	11.1
LS1226	12	11.1
LS130170	130	11.1
LS140180	140	11.1
LS150190	150	11.1
LS1528	15	11.1
LS160200	160	11.1
LS1730	17	11.1
LS2035	20	11.1
LS2542	25	11.1
LS3047	30	11.1
LS3552	35	11.1
LS4060	40	11.1
LS4565	45	11.1

Index	d [mm]	Tab.No
LS5070	50	11.1
LS5578	55	11.1
LS6085	60	11.1
LS6590	65	11.1
LS7095	70	11.1
LS75100	75	11.1
LS80105	80	11.1
LS85110	85	11.1
LS90120	90	11.1
M12648/10	22,225	4.2
M12649/10	21,43	4.2
M20	20	1.5
M224749/10	120,65	4.2
M224749/11	120,65	4.2
M231648/10	152,4	4.2
M231649/10	152,4	4.2
M235145/13	165,1	4.2
M236845/10	174,625	4.2
M236848/10	177,8	4.2
M236849/10	177,8	4.2
M238840/10	177,8	4.2
M238849/10	187,325	4.2
M241543/10	200,025	4.2
M241547/10	203,2	4.2
M241549/10	204,788	4.2
M244249/10	220,663	4.2
M246942/10	231,775	4.2
M246949/10	237,33	4.2
M249732/10	228,6	4.2
M249734/10	231,775	4.2
M249736/10	237,33	4.2
M249749/10	254	4.2
M252330/10	234,95	4.2
M252337/10	247,65	4.2
M252349/10	269,875	4.2
M255449/10	288,925	4.2
M268730/10	381	4.2
M268749/10	415,925	4.2
M270749/10	447,675	4.2
M272749/10	479,425	4.2
M274149/10	501,65	4.2
M276449/10	536,575	4.2
M278749/10	571,5	4.2
M348449/10	247,65	4.2
M349549/10	257,175	4.2
M349549A/10	257,175	4.2
M38549/10	34,925	4.2
M533349S/10	165,1	4.2
M667935/11	387,248	4.2
M667948/11	409,575	4.2
M802048/11	41,275	4.2
M804048/10	47,625	4.2
M804049/10	47,625	4.2
M84249/10	25,4	4.2
M84548/10	25,4	4.2
M86643/10	25,4	4.2
M86647/10	28,575	4.2
M86648A/10	30,955	4.2
M86649/10	30,162	4.2
M88036/11	25,4	4.2
M88043/10	30,162	4.2
M88046/10	31,75	4.2
M88048/10	33,338	4.2
M903345/10	41,275	4.2
M959442/10	304,8	4.2
MB00	10	18.7
MB01	12	18.7
MB02	15	18.7
MB03	17	18.7
MB04	20	18.7
MB05	25	18.7
MB06	30	18.7
MB07	35	18.7
MB08	40	18.7
MB09	45	18.7
MB10	50	18.7
MB11	55	18.7
MB12	60	18.7
MB13	65	18.7
MB14	70	18.7
MB15	75	18.7
MB16	80	18.7
MB17	85	18.7
MB18	90	18.7
MB19	95	18.7
MB20	100	18.7
MB21	105	18.7
MB22	110	18.7
MB23	115	18.7
MB24	120	18.7

Index	d [mm]	Tab.No
MB25	125	18.7
MB26	130	18.7
MB27	135	18.7
MB28	140	18.7
MB29	145	18.7
MB30	150	18.7
MB31	155	18.7
MB32	160	18.7
MB33	165	18.7
MB34	170	18.7
MB36	180	18.7
MB38	190	18.7
MB40	200	18.7
MB44	220	18.7
MB48	240	18.7
MB52	260	18.7
MB56	280	18.7
MS30/1500	1500	18.8
MS30/530	530	18.8
MS30/560	560	18.8
MS30/630	630	18.8
MS30/670	670	18.8
MS30/710	710	18.8
MS30/750	750	18.8
MS30/750	750	18.8
MS3044	220	18.8
MS3048	240	18.8
MS3052	260	18.8
MS3056	280	18.8
MS3060	300	18.8
MS3064	320	18.8
MS3068	340	18.8
MS3072	360	18.8
MS3076	380	18.8
MS3080	400	18.8
MS3084	420	18.8
MS3088	440	18.8
MS3092	460	18.8
MS3096	480	18.8
MS31/1000	1000	18.8
MS31/1000	1000	18.8
MS31/500	500	18.8
MS31/530	530	18.8
MS31/560	560	18.8
MS31/630	630	18.8
MS31/670	670	18.8
MS31/710	710	18.8
MS31/850	850	18.8
MS31/850	850	18.8
MS31/900	900	18.8
MS31/950	950	18.8
MS31/950	950	18.8
MS3144	220	18.8
MS3148	240	18.8
MS3152	260	18.8
MS3156	280	18.8
MS3160	300	18.8
MS3164	320	18.8
MS3168	340	18.8
MS3172	360	18.8
MS3176	380	18.8
MS3180	400	18.8
MS3184	420	18.8
MS3188	440	18.8
MS3192	460	18.8
MS3196	480	18.8
N10/500	500	5.6
N10/560	560	5.6
N10/800	800	5.6
N18/1600	1600	5.6
N18/500	500	5.6
N18/670	670	5.6
N18/710	710	5.6
N1872	360	5.6
N1880	400	5.6
N1892	460	5.6
N19/500	500	5.6
N19/530	530	5.6
N19/560	560	5.6
N19/600	600	5.6
N19/630	630	5.6
N19/710	710	5.6
N19/750	750	5.6
N19/850	850	5.6
N1920	100	5.6
N1921	105	5.6
N1926	130	5.6
N1928	140	5.6
N1932	160	5.6
N1952	260	5.6

Index	d [mm]	Tab.No
N1956	280	5.6
N1960	300	5.6
N1968	340	5.6
N1972	360	5.6
N1984	420	5.6
N1992	460	5.6
N1996	480	5.6
N20/1250	1250	5.6
N202 E	15	5.6
N203 E	17	5.6
N204 E	20	5.6
N205 E	25	5.6
N206 E	30	5.6
N207 E	35	5.6
N208 E	40	5.6
N209 E	45	5.6
N210 E	50	5.6
N211 E	55	5.6
N212 E	60	5.6
N213 E	65	5.6
N214 E	70	5.6
N215 E	75	5.6
N216 E	80	5.6
N217 E	85	5.6
N218 E	90	5.6
N219 E	95	5.6
N220 E	100	5.6
N221 E	105	5.6
N222 E	110	5.6
N2220 E	100	5.6
N2222 E	110	5.6
N2224 E	120	5.6
N2226 E	130	5.6
N2228 E	140	5.6
N2230 E	150	5.6
N2232 E	160	5.6
N2234 E	170	5.6
N2236 E	180	5.6
N2238	190	5.6
N224 E	120	5.6
N2240	200	5.6
N2244	220	5.6
N2248	240	5.6
N2252	260	5.6
N226 E	130	5.6
N228 E	140	5.6
N230 E	150	5.6
N232 E	160	5.6
N2320 E	100	5.6
N2321	105	5.6
N2322 E	120	5.6
N2324 E	120	5.6
N2326 E	130	5.6
N2328 E	140	5.6
N2330 E	150	5.6
N2332 E	160	5.6
N2334	170	5.6
N2336	180	5.6
N2338	190	5.6
N234 E	170	5.6
N2340	200	5.6
N2344	220	5.6
N2348	240	5.6
N2352	260	5.6
N236 E	180	5.6
N238 E	190	5.6
N240 E	200	5.6
N244 E	220	5.6
N248 E	240	5.6
N252 E	260	5.6
N256 E	280	5.6
N260 E	300	5.6
N264 E	320	5.6
N28/1000	1000	5.6
N28/1060	1060	5.6
N28/1400	1400	5.6
N28/630	630	5.6
N28/710	710	5.6
N28/850	850	5.6
N28/900	900	5.6
N29/500	500	5.6
N29/530	530	5.6
N29/560	560	5.6
N29/630	630	5.6
N29/710	710	5.6
N29/850	850	5.6
N2924	120	5.6
N2926	130	5.6
N2928	140	5.6
N2932	160	5.6

Index	d [mm]	Tab.No
N2944	220	5.6
N2952	260	5.6
N2968	340	5.6
N2972	360	5.6
N2996	480	5.6
N30/1060	1060	5.6
N30/1320	1320	5.6
N30/530 E	530	5.6
N3030	150	5.6
N3034	170	5.6
N3036	180	5.6
N3038	190	5.6
N304 E	20	5.6
N3040	200	5.6
N3048	240	5.6
N305 E	25	5.6
N306 E	30	5.6
N3060	300	5.6
N3064	320	5.6
N3068	340	5.6
N307 E	35	5.6
N3072	360	5.6
N3076	380	5.6
N308 E	40	5.6
N3080	400	5.6
N3084	420	5.6
N309 E	45	5.6
N3092	460	5.6
N3096	480	5.6
N31/560	560	5.6
N310 E	50	5.6
N311 E	55	5.6
N312 E	60	5.6
N313 E	65	5.6
N3132	160	5.6
N3138	190	5.6
N314 E	70	5.6
N3144	220	5.6
N315 E	75	5.6
N3152	260	5.6
N3156	280	5.6
N316 E	80	5.6
N3160	300	5.6
N317 E	85	5.6
N318 E	90	5.6
N319 E	95	5.6
N320 E	100	5.6
N321 E	105	5.6
N322 E	110	5.6
N3220	100	5.6
N3221	105	5.6
N3222	110	5.6
N3224	120	5.6
N3226	130	5.6
N3228	140	5.6
N3236	180	5.6
N3238	190	5.6
N324 E	120	5.6
N3240	200	5.6
N3244	220	5.6
N3248	240	5.6
N3252	260	5.6
N326 E	130	5.6
N328 E	140	5.6
N330 E	150	5.6
N332 E	160	5.6
N3320	100	5.6
N3326	130	5.6
N3330	150	5.6
N3332	160	5.6
N3336	180	5.6
N3338	190	5.6
N334 E	170	5.6
N3340	220	5.6
N3344	220	5.6
N3352	260	5.6
N336 E	180	5.6
N338 E	190	5.6
N340 E	200	5.6
N344 E	220	5.6
N348 E	240	5.6
N38/500	500	5.6
N38/630	630	5.6
N38/950	950	5.6
N3856	280	5.6
N3860	300	5.6
N3868	340	5.6
N3876	380	5.6
N3880	400	5.6
N3884	420	5.6

https://nppnovoteh.com

Index	d [mm]	Tab.No
N39/1180	1180	5.6
N39/1320	1320	5.6
N39/500	500	5.6
N406	30	5.6
N407	35	5.6
N408	40	5.6
N409	45	5.6
N410	50	5.6
N411	55	5.6
N412	60	5.6
N413	65	5.6
N414	70	5.6
N415	75	5.6
N416	80	5.6
N417	85	5.6
N418	90	5.6
N419	95	5.6
N420	100	5.6
N421	105	5.6
N422	110	5.6
N424	120	5.6
N426	130	5.6
N428	140	5.6
N430	150	5.6
NA22/6 2RS	6	6.1
NA22/6 2RS	6	13.3
NA22/8 2RS	8	6.1
NA22/8 2RS	8	13.3
NA2200 2RS	10	6.1
NA2200 2RS	10	13.3
NA2201 2RS	12	6.1
NA2201 2RS	12	13.3
NA2202 2RS	15	6.1
NA2202 2RS	15	13.3
NA2203 2RS	17	6.1
NA2203 2RS	17	13.3
NA2204 2RS	20	6.1
NA2204 2RS	20	13.3
NA2205 2RS	25	6.1
NA2205 2RS	25	13.3
NA2206 2RS	30	6.1
NA2206 2RS	30	13.3
NA2207 2RS	35	6.1
NA2207 2RS	35	13.3
NA2208 2RS	40	6.1
NA2208 2RS	40	13.3
NA2209 2RS	45	6.1
NA2209 2RS	45	13.3
NA2210 2RS	50	6.1
NA2210 2RS	50	13.3
NA4004 V	20	6.1
NA4004 V	20	13.3
NA4005 V	25	6.1
NA4005 V	25	13.3
NA4006 V	30	6.1
NA4006 V	30	13.3
NA4007 V	35	6.1
NA4007 V	35	13.3
NA4008 V	40	6.1
NA4008 V	40	13.3
NA4010 V	50	6.1
NA4010 V	50	13.3
NA4822	110	6.1
NA4824	120	6.1
NA4826	130	6.1
NA4828	140	6.1
NA4830	150	6.1
NA4832	160	6.1
NA4834	170	6.1
NA4836	180	6.1
NA4838	190	6.1
NA4840	200	6.1
NA4844	220	6.1
NA4848	240	6.1
NA4852	260	6.1
NA4856	280	6.1
NA4860	300	6.1
NA4864	320	6.1
NA4868	340	6.1
NA4872	360	6.1
NA4876	380	6.1
NA49/22	22	6.1
NA49/28	28	6.1
NA49/32	32	6.1
NA4900	10	6.1
NA4900 2RS	10	6.1
NA4901	12	6.1
NA4901 2RS	12	6.1
NA4902	15	6.1
NA4902 2RS	15	6.1

Index	d [mm]	Tab.No
NA4903	17	6.1
NA4903 2RS	17	6.1
NA4904	20	6.1
NA4904 2RS	20	6.1
NA4905	25	6.1
NA4905 2RS	25	6.1
NA4906	30	6.1
NA4906 2RS	30	6.1
NA4907	35	6.1
NA4907 2RS	35	6.1
NA4908	40	6.1
NA4908 2RS	40	6.1
NA4909	45	6.1
NA4909 2RS	45	6.1
NA4910	50	6.1
NA4910 2RS	50	6.1
NA4911	55	6.1
NA4912	60	6.1
NA4913	65	6.1
NA4914	70	6.1
NA4915	75	6.1
NA4916	80	6.1
NA4917	85	6.1
NA4918	90	6.1
NA4919	95	6.1
NA4920	100	6.1
NA4922	110	6.1
NA4924	120	6.1
NA4926	130	6.1
NA4928	140	6.1
NA4930	150	6.1
NA4932	160	6.1
NA4934	170	6.1
NA4936	180	6.1
NA4938	190	6.1
NA4940	200	6.1
NA4944	220	6.1
NA4948	240	6.1
NA495	5	6.1
NA4952	260	6.1
NA4956	280	6.1
NA496	6	6.1
NA4960	300	6.1
NA4964	320	6.1
NA4968	340	6.1
NA497	7	6.1
NA4972	360	6.1
NA4976	380	6.1
NA498	8	6.1
NA4980	400	6.1
NA4984	420	6.1
NA4988	440	6.1
NA499	9	6.1
NA59/22	22	6.1
NA59/28	28	6.1
NA59/32	32	6.1
NA5902	15	6.1
NA5903	17	6.1
NA5904	20	6.1
NA5905	25	6.1
NA5906	30	6.1
NA5907	35	6.1
NA5908	40	6.1
NA5909	45	6.1
NA5910	50	6.1
NA5911	55	6.1
NA5912	60	6.1
NA5913	65	6.1
NA5914	70	6.1
NA5915	75	6.1
NA5916	80	6.1
NA5917	85	6.1
NA5918	90	6.1
NA5919	95	6.1
NA5920	100	6.1
NA5922	110	6.1
NA5924	120	6.1
NA5926	130	6.1
NA5928	140	6.1
NA69/22	22	6.1
NA69/28	28	6.1
NA69/32	32	6.1
NA6901	12	6.1
NA6902	15	6.1
NA6903	17	6.1
NA6904	20	6.1
NA6905	25	6.1
NA6906	30	6.1
NA6907	35	6.1
NA6908	40	6.1

Index	d [mm]	Tab.No
NA6909	45	6.1
NA6910	50	6.1
NA6911	55	6.1
NA6912	60	6.1
NA6913	65	6.1
NA6914	70	6.1
NA6915	75	6.1
NA6916	80	6.1
NA6917	85	6.1
NA6918	90	6.1
NA6919	95	6.1
NAO12x24x13	12	6.1
NAO12x28x12	12	6.1
NAO15x28x13	15	6.1
NAO15x32x12	15	6.1
NAO17x30x13	17	6.1
NAO17x35x16	17	6.1
NAO20x35x17	20	6.1
NAO20x37x16	20	6.1
NAO25x40x17	25	6.1
NAO25x42x16	25	6.1
NAO25x42x32	25	6.1
NAO30x45x17	30	6.1
NAO30x45x26	30	6.1
NAO30x47x16	30	6.1
NAO30x47x18	30	6.1
NAO35x50x17	35	6.1
NAO35x55x20	35	6.1
NAO40x55x17	40	6.1
NAO50x68x20	50	6.1
NAO6x17x10	6	6.1
NAO70x100x30	70	6.1
NAO80x110x30	80	6.1
NAO90x120x30	90	6.1
NAO9x22x12	9	6.1
NATR 05	5	13.3
NATR 06	6	13.3
NATR 08	8	13.3
NATR 10	10	13.3
NATR 12	12	13.3
NATR 15	15	13.3
NATR 17	17	13.3
NATR 20	20	13.3
NATR 25	25	13.3
NATR 30	30	13.3
NATR 35	35	13.3
NATR 40	40	13.3
NATV 05	5	13.3
NATV 06	6	13.3
NATV 08	8	13.3
NATV 10	10	13.3
NATV 12	12	13.3
NATV 15	15	13.3
NATV 17	17	13.3
NATV 20	20	13.3
NATV 25	25	13.3
NATV 30	30	13.3
NATV 35	35	13.3
NATV 40	40	13.3
NATV 50	50	13.3
NCF18/500 V	500	5.9
NCF1840 V	200	5.9
NCF1844 V	220	5.9
NCF1848 V	240	5.9
NCF1852 V	260	5.9
NCF1856 V	280	5.9
NCF1860 V	300	5.9
NCF1864 V	320	5.9
NCF1868 V	340	5.9
NCF1872 V	360	5.9
NCF1876 V	380	5.9
NCF1880 V	400	5.9
NCF1884 V	420	5.9
NCF1888 V	440	5.9
NCF1892 V	460	5.9
NCF1896 V	480	5.9
NCF2204 V	20	5.9
NCF2205 V	25	5.9
NCF2206 V	30	5.9
NCF2207 V	35	5.9
NCF2208 V	40	5.9
NCF2209 V	45	5.9
NCF2210 V	50	5.9
NCF2211 V	55	5.9
NCF2212 V	60	5.9
NCF2213 V	65	5.9
NCF2214 V	70	5.9
NCF2215 V	75	5.9
NCF2216 V	80	5.9
NCF2217 V	85	5.9

Index	d [mm]	Tab.No
NCF2218 V	90	5.9
NCF2219 V	95	5.9
NCF2220 V	100	5.9
NCF2222 V	110	5.9
NCF2224 V	120	5.9
NCF2226 V	130	5.9
NCF2228 V	140	5.9
NCF2230 V	150	5.9
NCF2232 V	160	5.9
NCF2234 V	170	5.9
NCF2236 V	180	5.9
NCF2238 V	190	5.9
NCF2240 V	200	5.9
NCF29/500 V	500	5.9
NCF2912 V	60	5.9
NCF2913 V	65	5.9
NCF2914 V	70	5.9
NCF2915 V	75	5.9
NCF2916 V	80	5.9
NCF2917 V	85	5.9
NCF2918 V	90	5.9
NCF2919 V	95	5.9
NCF2920 V	100	5.9
NCF2922 V	110	5.9
NCF2924 V	120	5.9
NCF2926 V	130	5.9
NCF2928 V	140	5.9
NCF2930 V	150	5.9
NCF2932 V	160	5.9
NCF2934 V	170	5.9
NCF2936 V	180	5.9
NCF2938 V	190	5.9
NCF2940 V	200	5.9
NCF2944 V	220	5.9
NCF2948 V	240	5.9
NCF2952 V	260	5.9
NCF2956 V	280	5.9
NCF2960 V	300	5.9
NCF2964 V	320	5.9
NCF2968 V	340	5.9
NCF2972 V	360	5.9
NCF2976 V	380	5.9
NCF2980 V	400	5.9
NCF2984 V	420	5.9
NCF2988 V	440	5.9
NCF2992 V	460	5.9
NCF2996 V	480	5.9
NCF3004 V	20	5.9
NCF3005 V	25	5.9
NCF3006 V	30	5.9
NCF3007 V	35	5.9
NCF3008 V	40	5.9
NCF3009 V	45	5.9
NCF3010 V	50	5.9
NCF3011 V	55	5.9
NCF3012 V	60	5.9
NCF3013 V	65	5.9
NCF3014 V	70	5.9
NCF3015 V	75	5.9
NCF3016 V	80	5.9
NCF3017 V	85	5.9
NCF3018 V	90	5.9
NCF3020 V	100	5.9
NCF3022 V	110	5.9
NCF3024 V	120	5.9
NCF3026 V	130	5.9
NCF3028 V	140	5.9
NCF3030 V	150	5.9
NCF3032 V	160	5.9
NCF3034 V	170	5.9
NCF3036 V	180	5.9
NCF3038 V	190	5.9
NCF3040 V	200	5.9
NCF3044 V	220	5.9
NCF3048 V	240	5.9
NCF3052 V	260	5.9
NCF3056 V	280	5.9
NCF3060 V	300	5.9
NCF3064 V	320	5.9
NCF3068 V	340	5.9
NCF3072 V	360	5.9
NCF3076 V	380	5.9
NCF3080 V	400	5.9
NF10/500	500	5.6
NF10/560	560	5.6
NF10/800	800	5.6
NF18/1600	1600	5.6
NF18/500	500	5.6
NF18/670	670	5.6
NF18/710	710	5.6

Index	d [mm]	Tab.No
NF1872	360	5.6
NF1880	400	5.6
NF1892	460	5.6
NF19/500	500	5.6
NF19/530	530	5.6
NF19/560	560	5.6
NF19/600	600	5.6
NF19/630	630	5.6
NF19/710	710	5.6
NF19/750	750	5.6
NF19/850	850	5.6
NF1920	100	5.6
NF1921	105	5.6
NF1926	130	5.6
NF1928	140	5.6
NF1932	160	5.6
NF1952	260	5.6
NF1956	280	5.6
NF1960	300	5.6
NF1968	340	5.6
NF1972	360	5.6
NF1984	420	5.6
NF1992	460	5.6
NF1996	480	5.6
NF20/1250	1250	5.6
NF202 E	15	5.6
NF203 E	17	5.6
NF204 E	20	5.6
NF205 E	25	5.6
NF206 E	30	5.6
NF207 E	35	5.6
NF208 E	40	5.6
NF209 E	45	5.6
NF210 E	50	5.6
NF211 E	55	5.6
NF212 E	60	5.6
NF213 E	65	5.6
NF214 E	70	5.6
NF215 E	75	5.6
NF216 E	80	5.6
NF217 E	85	5.6
NF218 E	90	5.6
NF219 E	95	5.6
NF220 E	100	5.6
NF221 E	105	5.6
NF222 E	110	5.6
NF2220 E	100	5.6
NF2222 E	110	5.6
NF2224 E	120	5.6
NF2226 E	130	5.6
NF2228 E	140	5.6
NF2230 E	150	5.6
NF2232 E	160	5.6
NF2234 E	170	5.6
NF2236 E	180	5.6
NF2238	190	5.6
NF224 E	120	5.6
NF2240	200	5.6
NF2244	220	5.6
NF2248	240	5.6
NF2252	260	5.6
NF226 E	130	5.6
NF228 E	140	5.6
NF230 E	150	5.6
NF232 E	160	5.6
NF2320 E	100	5.6
NF2321	105	5.6
NF2322 E	120	5.6
NF2324 E	120	5.6
NF2326 E	130	5.6
NF2328 E	140	5.6
NF2330 E	150	5.6
NF2332 E	160	5.6
NF2334	170	5.6
NF2336	180	5.6
NF2338	190	5.6
NF234 E	170	5.6
NF2340	200	5.6
NF2344	220	5.6
NF2348	240	5.6
NF2352	260	5.6
NF236 E	180	5.6
NF238 E	190	5.6
NF240 E	200	5.6
NF244 E	220	5.6
NF248 E	240	5.6
NF252 E	260	5.6
NF256 E	280	5.6
NF260 E	300	5.6
NF264 E	320	5.6

https://nppnovoteh.com

23. INDEX

Index	d [mm]	Tab.No
NF28/1000	1000	5.6
NF28/1060	1060	5.6
NF28/1400	1400	5.6
NF28/630	630	5.6
NF28/710	710	5.6
NF28/850	850	5.6
NF28/900	900	5.6
NF29/500	500	5.6
NF29/530	530	5.6
NF29/560	560	5.6
NF29/630	630	5.6
NF29/710	710	5.6
NF29/850	850	5.6
NF2924	120	5.6
NF2926	130	5.6
NF2928	140	5.6
NF2932	160	5.6
NF2944	220	5.6
NF2952	260	5.6
NF2968	340	5.6
NF2972	360	5.6
NF2996	480	5.6
NF30/1060	1060	5.6
NF30/1320	1320	5.6
NF30/530 E	530	5.6
NF3030	150	5.6
NF3034	170	5.6
NF3036	180	5.6
NF3038	190	5.6
NF304 E	20	5.6
NF3040	200	5.6
NF3048	240	5.6
NF305 E	25	5.6
NF306 E	30	5.6
NF3060	300	5.6
NF3064	320	5.6
NF3068	340	5.6
NF307 E	35	5.6
NF3072	360	5.6
NF3076	380	5.6
NF308 E	40	5.6
NF3080	400	5.6
NF3084	420	5.6
NF309 E	45	5.6
NF3092	460	5.6
NF3096	480	5.6
NF31/560	560	5.6
NF310 E	50	5.6
NF311 E	55	5.6
NF312 E	60	5.6
NF313 E	65	5.6
NF3132	160	5.6
NF3138	190	5.6
NF314 E	70	5.6
NF3144	220	5.6
NF315 E	75	5.6
NF3152	260	5.6
NF3156	280	5.6
NF316 E	80	5.6
NF3160	300	5.6
NF317 E	85	5.6
NF318 E	90	5.6
NF319 E	95	5.6
NF320 E	100	5.6
NF321 E	105	5.6
NF322 E	110	5.6
NF3220	100	5.6
NF3221	105	5.6
NF3222	110	5.6
NF3224	120	5.6
NF3226	130	5.6
NF3228	140	5.6
NF3236	180	5.6
NF3238	190	5.6
NF324 E	120	5.6
NF3240	200	5.6
NF3244	220	5.6
NF3248	240	5.6
NF3252	260	5.6
NF326 E	130	5.6
NF328 E	140	5.6
NF330 E	150	5.6
NF332 E	160	5.6
NF3320	100	5.6
NF3326	130	5.6
NF3330	150	5.6
NF3332	160	5.6
NF3336	180	5.6
NF3338	190	5.6
NF334 E	170	5.6

Index	d [mm]	Tab.No
NF3340	220	5.6
NF3344	220	5.6
NF3352	260	5.6
NF336 E	180	5.6
NF338 E	190	5.6
NF340 E	200	5.6
NF344 E	220	5.6
NF348 E	240	5.6
NF38/500	500	5.6
NF38/630	630	5.6
NF38/950	950	5.6
NF3856	280	5.6
NF3860	300	5.6
NF3868	340	5.6
NF3876	380	5.6
NF3880	400	5.6
NF3884	420	5.6
NF39/1180	1180	5.6
NF39/1320	1320	5.6
NF39/500	500	5.6
NF406	30	5.6
NF407	35	5.6
NF408	40	5.6
NF409	45	5.6
NF410	50	5.6
NF411	55	5.6
NF412	60	5.6
NF413	65	5.6
NF414	70	5.6
NF415	75	5.6
NF416	80	5.6
NF417	85	5.6
NF418	90	5.6
NF419	95	5.6
NF420	100	5.6
NF421	105	5.6
NF422	110	5.6
NF424	120	5.6
NF426	130	5.6
NF428	140	5.6
NF430	150	5.6
NH10/500	500	5.3
NH1034	170	5.3
NH1036	180	5.3
NH1038	190	5.3
NH1040	200	5.3
NH1044	220	5.3
NH1048	240	5.3
NH1052	260	5.3
NH1056	280	5.3
NH1060	300	5.3
NH1064	320	5.3
NH1068	340	5.3
NH1072	360	5.3
NH1076	380	5.3
NH1080	400	5.3
NH1084	420	5.3
NH1088	440	5.3
NH1092	460	5.3
NH1096	480	5.3
NH202 E	15	5.3
NH203 E	17	5.3
NH204 E	20	5.3
NH205 E	25	5.3
NH206 E	30	5.3
NH207 E	35	5.3
NH208 E	40	5.3
NH209 E	45	5.3
NH210 E	50	5.3
NH211 E	55	5.3
NH212 E	60	5.3
NH213 E	65	5.3
NH214 E	70	5.3
NH215 E	75	5.3
NH216 E	80	5.3
NH217 E	85	5.3
NH218 E	90	5.3
NH219 E	95	5.3
NH220 E	100	5.3
NH2203 E	17	5.3
NH2204 E	20	5.3
NH2205 E	25	5.3
NH2206 E	30	5.3
NH2207 E	35	5.3
NH2208 E	40	5.3
NH2209 E	45	5.3
NH221 E	105	5.3
NH2210 E	50	5.3
NH2211 E	55	5.3
NH2212 E	60	5.3

Index	d [mm]	Tab.No
NH2213 E	65	5.3
NH2214 E	70	5.3
NH2215 E	75	5.3
NH2216 E	80	5.3
NH2217 E	85	5.3
NH2218 E	90	5.3
NH2219 E	95	5.3
NH222 E	110	5.3
NH2220 E	100	5.3
NH2222 E	110	5.3
NH2224 E	120	5.3
NH2226 E	130	5.3
NH2228 E	140	5.3
NH2230 E	150	5.3
NH2232 E	160	5.3
NH2234 E	170	5.3
NH2236 E	180	5.3
NH2238 E	190	5.3
NH224 E	120	5.3
NH2240 E	200	5.3
NH2244 E	220	5.3
NH2248	240	5.3
NH2252	260	5.3
NH2256 E	280	5.3
NH226 E	130	5.3
NH2260	300	5.3
NH2264	320	5.3
NH228 E	140	5.3
NH230 E	150	5.3
NH2304 E	20	5.3
NH2305 E	25	5.3
NH2306 E	30	5.3
NH2307 E	35	5.3
NH2308 E	40	5.3
NH2309 E	45	5.3
NH2310 E	50	5.3
NH2311 E	55	5.3
NH2312 E	60	5.3
NH2313 E	65	5.3
NH2314 E	70	5.3
NH2315 E	75	5.3
NH2316 E	80	5.3
NH2317 E	85	5.3
NH2318 E	90	5.3
NH2319 E	95	5.3
NH232 E	160	5.3
NH2320 E	100	5.3
NH2322 E	110	5.3
NH2324 E	120	5.3
NH2326 E	130	5.3
NH2328 E	140	5.3
NH2330 E	150	5.3
NH2332 E	160	5.3
NH2334	170	5.3
NH2336	180	5.3
NH2338 E	190	5.3
NH234 E	170	5.3
NH2340 E	200	5.3
NH2344 E	220	5.3
NH2348	240	5.3
NH2356	280	5.3
NH236 E	180	5.3
NH238 E	190	5.3
NH240 E	200	5.3
NH244 E	220	5.3
NH248 E	240	5.3
NH252 E	260	5.3
NH256	280	5.3
NH260	300	5.3
NH264	320	5.3
NH302 E	15	5.3
NH303 E	17	5.3
NH304 E	20	5.3
NH305 E	25	5.3
NH306 E	30	5.3
NH307 E	35	5.3
NH308 E	40	5.3
NH309 E	45	5.3
NH310 E	50	5.3
NH311 E	55	5.3
NH312 E	60	5.3
NH313 E	65	5.3
NH314 E	70	5.3
NH315 E	75	5.3
NH316 E	80	5.3
NH317 E	85	5.3
NH318 E	90	5.3
NH319 E	95	5.3
NH320 E	100	5.3
NH321 E	105	5.3

Index	d [mm]	Tab.No
NH322 E	110	5.3
NH324 E	120	5.3
NH326 E	130	5.3
NH328 E	140	5.3
NH330 E	150	5.3
NH332 E	160	5.3
NH334 E	170	5.3
NH336 E	180	5.3
NH338 E	190	5.3
NH340 E	200	5.3
NH344	220	5.3
NH348 E	240	5.3
NH352	260	5.3
NH356 E	280	5.3
NH406	30	5.3
NH407	35	5.3
NH408	40	5.3
NH409	45	5.3
NH410	50	5.3
NH411	55	5.3
NH412	60	5.3
NH413	65	5.3
NH414	70	5.3
NH415	75	5.3
NH416	80	5.3
NH417	85	5.3
NH418	90	5.3
NH419	95	5.3
NH420	100	5.3
NH421	105	5.3
NH422	110	5.3
NH424	120	5.3
NH426	130	5.3
NH428	140	5.3
NH430	150	5.3
NJ10/500	500	5.2
NJ10/530	530	5.2
NJ10/560	560	5.2
NJ10/600	600	5.2
NJ10/630	630	5.2
NJ10/670	670	5.2
NJ10/710	710	5.2
NJ10/750	750	5.2
NJ10/800	800	5.2
NJ1005	25	5.2
NJ1006	30	5.2
NJ1007	35	5.2
NJ1008	40	5.2
NJ1009	45	5.2
NJ100X180X60,3	100	5.2
NJ1010	50	5.2
NJ1011	55	5.2
NJ1012	60	5.2
NJ1013	65	5.2
NJ1014	70	5.2
NJ1015	75	5.2
NJ1016	80	5.2
NJ1017	85	5.2
NJ1018	90	5.2
NJ1019	95	5.2
NJ1020	100	5.2
NJ1021	105	5.2
NJ1022	110	5.2
NJ1024	120	5.2
NJ1026	130	5.2
NJ1028	140	5.2
NJ1030	150	5.2
NJ1032	160	5.2
NJ1034	170	5.2
NJ1036	180	5.2
NJ1038	190	5.2
NJ1040	200	5.2
NJ1044	220	5.2
NJ1048	240	5.2
NJ1052	260	5.2
NJ1056	280	5.2
NJ1060	300	5.2
NJ1064	320	5.2
NJ1068	340	5.2
NJ1072	360	5.2
NJ1076	380	5.2
NJ1080	400	5.2
NJ1084	420	5.2
NJ1088	440	5.2
NJ1092	460	5.2
NJ1096	480	5.2
NJ110X215X73	110	5.2
NJ118X240X80	118	5.2
NJ12/500	500	5.2
NJ12/560	560	5.2

Index	d [mm]	Tab.No
NJ12/630	630	5.2
NJ120X240X80	120	5.2
NJ1292	460	5.2
NJ130X240X80	130	5.2
NJ130X250X80	130	5.2
NJ159X300X84	159	5.2
NJ160X300X84	160	5.2
NJ18/1000	1000	5.2
NJ18/1120	1120	5.2
NJ18/1180	1180	5.2
NJ18/1320	1320	5.2
NJ18/1600	1600	5.2
NJ18/1700	1700	5.2
NJ18/500	500	5.2
NJ18/560	560	5.2
NJ18/600	600	5.2
NJ18/630	630	5.2
NJ18/670	670	5.2
NJ18/710	710	5.2
NJ18/750	750	5.2
NJ18/800	800	5.2
NJ18/900	900	5.2
NJ1864	320	5.2
NJ1872	360	5.2
NJ1876	380	5.2
NJ1880	400	5.2
NJ1884	420	5.2
NJ1896	480	5.2
NJ19/500	500	5.2
NJ19/530	530	5.2
NJ19/560	560	5.2
NJ19/600	600	5.2
NJ19/630	630	5.2
NJ19/670	670	5.2
NJ19/710	710	5.2
NJ19/850	850	5.2
NJ19/900	900	5.2
NJ1920	100	5.2
NJ1921	105	5.2
NJ1926	130	5.2
NJ1928	140	5.2
NJ1932	160	5.2
NJ1938	190	5.2
NJ1940	200	5.2
NJ1944	220	5.2
NJ1952	260	5.2
NJ1956	280	5.2
NJ1960	300	5.2
NJ1964	320	5.2
NJ1968	340	5.2
NJ1972	360	5.2
NJ1980	400	5.2
NJ1984	420	5.2
NJ1988	440	5.2
NJ1992	460	5.2
NJ1996	480	5.2
NJ2/600	600	5.2
NJ20/500	500	5.2
NJ20/530	530	5.2
NJ20/560	560	5.2
NJ20/600	600	5.2
NJ20/630	630	5.2
NJ20/670	670	5.2
NJ20/710	710	5.2
NJ20/750	750	5.2
NJ20/800	800	5.2
NJ2009	45	5.2
NJ202 E	15	5.2
NJ2026	130	5.2
NJ203 E	17	5.2
NJ2032	160	5.2
NJ2034	170	5.2
NJ204 E	20	5.2
NJ205 E	25	5.2
NJ2056	280	5.2
NJ206 E	30	5.2
NJ2060	300	5.2
NJ2064	320	5.2
NJ207 E	35	5.2
NJ2072	360	5.2
NJ2076	380	5.2
NJ208 E	40	5.2
NJ2080	400	5.2
NJ2084	420	5.2
NJ2088	440	5.2
NJ209 E	45	5.2
NJ2092	460	5.2
NJ2096	480	5.2
NJ210 E	50	5.2
NJ211 E	55	5.2

https://nppnovoteh.com

Index	d [mm]	Tab.No
NJ212 E	60	5.2
NJ213 E	65	5.2
NJ214 E	70	5.2
NJ215 E	75	5.2
NJ216 E	80	5.2
NJ217 E	85	5.2
NJ218 E	90	5.2
NJ219 E	95	5.2
NJ220 E	100	5.2
NJ2203 E	17	5.2
NJ2204 E	20	5.2
NJ2205 E	25	5.2
NJ2206 E	30	5.2
NJ2207 E	35	5.2
NJ2208 E	40	5.2
NJ2209 E	45	5.2
NJ221 E	105	5.2
NJ2210 E	50	5.2
NJ2211 E	55	5.2
NJ2212 E	60	5.2
NJ2213 E	65	5.2
NJ2214 E	70	5.2
NJ2215 E	75	5.2
NJ2216 E	80	5.2
NJ2217 E	85	5.2
NJ2218 E	90	5.2
NJ2219 E	95	5.2
NJ222 E	110	5.2
NJ2220 E	100	5.2
NJ2222 E	110	5.2
NJ2224 E	120	5.2
NJ2226 E	130	5.2
NJ2228 E	140	5.2
NJ2230 E	150	5.2
NJ2232 E	160	5.2
NJ2234 E	170	5.2
NJ2236 E	180	5.2
NJ2238 E	190	5.2
NJ224 E	120	5.2
NJ2240 E	200	5.2
NJ2244 E	220	5.2
NJ2248 E	240	5.2
NJ2252 E	260	5.2
NJ2256 E	280	5.2
NJ226 E	130	5.2
NJ2260	300	5.2
NJ2264	320	5.2
NJ2268	340	5.2
NJ2272	360	5.2
NJ2276	380	5.2
NJ228 E	140	5.2
NJ2292	460	5.2
NJ230 E	150	5.2
NJ2304 E	20	5.2
NJ2305 E	25	5.2
NJ2306 E	30	5.2
NJ2307 E	35	5.2
NJ2308 E	40	5.2
NJ2309 E	45	5.2
NJ2310 E	50	5.2
NJ2311 E	55	5.2
NJ2312 E	60	5.2
NJ2313 E	65	5.2
NJ2314 E	70	5.2
NJ2315 E	75	5.2
NJ2316 E	80	5.2
NJ2317 E	85	5.2
NJ2318 E	90	5.2
NJ2319 E	95	5.2
NJ232 E	160	5.2
NJ2320 E	100	5.2
NJ2322 E	110	5.2
NJ2324 E	120	5.2
NJ2326 E	130	5.2
NJ2328 E	140	5.2
NJ2330 E	150	5.2
NJ2332 E	160	5.2
NJ2334 E	170	5.2
NJ2336 E	180	5.2
NJ2338 E	190	5.2
NJ234 E	170	5.2
NJ2340 E	200	5.2
NJ2344 E	220	5.2
NJ2348 E	240	5.2
NJ2352 E	260	5.2
NJ2356 E	280	5.2
NJ236 E	180	5.2
NJ2360	300	5.2
NJ2372	360	5.2
NJ238 E	190	5.2

Index	d [mm]	Tab.No
NJ240 E	200	5.2
NJ244 E	220	5.2
NJ248 E	240	5.2
NJ252 E	260	5.2
NJ256 E	280	5.2
NJ260 E	300	5.2
NJ264 E	320	5.2
NJ28/1000	1000	5.2
NJ28/500	500	5.2
NJ28/530	530	5.2
NJ28/600	600	5.2
NJ28/630	630	5.2
NJ28/850	850	5.2
NJ28/900	900	5.2
NJ2840	200	5.2
NJ2860	300	5.2
NJ2864	320	5.2
NJ2868	340	5.2
NJ2888	440	5.2
NJ2892	460	5.2
NJ2896	480	5.2
NJ29/1000	1000	5.2
NJ29/1060	1060	5.2
NJ29/1180	1180	5.2
NJ29/1320	1320	5.2
NJ29/500	500	5.2
NJ29/530	530	5.2
NJ29/560	560	5.2
NJ29/600	600	5.2
NJ29/630	630	5.2
NJ29/710	710	5.2
NJ29/900	900	5.2
NJ29/950	950	5.2
NJ2924	120	5.2
NJ2926	130	5.2
NJ2928	140	5.2
NJ2932	160	5.2
NJ2944	220	5.2
NJ2952	260	5.2
NJ2968	340	5.2
NJ2972	360	5.2
NJ2984	420	5.2
NJ2988	440	5.2
NJ2992	460	5.2
NJ2996	480	5.2
NJ30/1120	1120	5.2
NJ30/500	500	5.2
NJ30/530 E	530	5.2
NJ30/600	600	5.2
NJ30/630	630	5.2
NJ30/670	670	5.2
NJ3013	65	5.2
NJ302 E	15	5.2
NJ303 E	17	5.2
NJ3030	150	5.2
NJ3034	170	5.2
NJ3036	180	5.2
NJ3038	190	5.2
NJ304 E	20	5.2
NJ3040	200	5.2
NJ3048	240	5.2
NJ305 E	25	5.2
NJ3052	260	5.2
NJ306 E	30	5.2
NJ3060	300	5.2
NJ3064	320	5.2
NJ3068	340	5.2
NJ307 E	35	5.2
NJ3072	360	5.2
NJ3076	380	5.2
NJ308 E	40	5.2
NJ3080	400	5.2
NJ3084	420	5.2
NJ309 E	45	5.2
NJ3092	460	5.2
NJ3096	480	5.2
NJ31/500	500	5.2
NJ31/530	530	5.2
NJ31/560	560	5.2
NJ310 E	50	5.2
NJ311 E	55	5.2
NJ312 E	60	5.2
NJ313 E	65	5.2
NJ3132	160	5.2
NJ3138	190	5.2
NJ314 E	70	5.2
NJ3144	220	5.2
NJ315 E	75	5.2
NJ3152	260	5.2
NJ3156	280	5.2

Index	d [mm]	Tab.No
NJ316 E	80	5.2
NJ3160	300	5.2
NJ3164	320	5.2
NJ3168	340	5.2
NJ317 E	85	5.2
NJ3172	360	5.2
NJ318 E	90	5.2
NJ3184	420	5.2
NJ3188	440	5.2
NJ319 E	95	5.2
NJ3192	460	5.2
NJ3196	480	5.2
NJ320 E	100	5.2
NJ3206	30	5.2
NJ3207	35	5.2
NJ3208	40	5.2
NJ3209	45	5.2
NJ321 E	105	5.2
NJ3210	50	5.2
NJ3211	55	5.2
NJ3212	60	5.2
NJ3213	65	5.2
NJ3214	70	5.2
NJ3215	75	5.2
NJ3216	80	5.2
NJ3217	85	5.2
NJ3218	90	5.2
NJ3219	95	5.2
NJ322 E	110	5.2
NJ3220	100	5.2
NJ3221	105	5.2
NJ3222	110	5.2
NJ3224	120	5.2
NJ3226	130	5.2
NJ3228	140	5.2
NJ3230	150	5.2
NJ3232	160	5.2
NJ3234	170	5.2
NJ3236	180	5.2
NJ3238	190	5.2
NJ324 E	120	5.2
NJ3240	200	5.2
NJ3244	220	5.2
NJ3248	240	5.2
NJ3252	260	5.2
NJ326 E	130	5.2
NJ328 E	140	5.2
NJ330 E	150	5.2
NJ3306	30	5.2
NJ3307	35	5.2
NJ3308	40	5.2
NJ3309	45	5.2
NJ3310	50	5.2
NJ3311	55	5.2
NJ3312	60	5.2
NJ3313	65	5.2
NJ3314	70	5.2
NJ3315	75	5.2
NJ3316	80	5.2
NJ3317	85	5.2
NJ3318	90	5.2
NJ3319	95	5.2
NJ332 E	160	5.2
NJ3320	100	5.2
NJ3321	105	5.2
NJ3322	110	5.2
NJ3324	120	5.2
NJ3326	130	5.2
NJ3328	140	5.2
NJ3330	150	5.2
NJ3332	160	5.2
NJ3334	170	5.2
NJ3336	180	5.2
NJ3338	190	5.2
NJ334 E	170	5.2
NJ3340	200	5.2
NJ3344	220	5.2
NJ3348	240	5.2
NJ3352	260	5.2
NJ336 E	180	5.2
NJ338 E	190	5.2
NJ340 E	200	5.2
NJ344 E	220	5.2
NJ348 E	240	5.2
NJ352 E	260	5.2
NJ356 E	280	5.2
NJ364	320	5.2
NJ38/500	500	5.2
NJ38/950	950	5.2
NJ3856	280	5.2

Index	d [mm]	Tab.No
NJ3860	300	5.2
NJ3868	340	5.2
NJ3876	380	5.2
NJ3880	400	5.2
NJ3884	420	5.2
NJ39/1060	1060	5.2
NJ39/500	500	5.2
NJ3988	440	5.2
NJ406	30	5.2
NJ407	35	5.2
NJ408	40	5.2
NJ409	45	5.2
NJ410	50	5.2
NJ411	55	5.2
NJ412	60	5.2
NJ413	65	5.2
NJ414	70	5.2
NJ415	75	5.2
NJ416	80	5.2
NJ417	85	5.2
NJ418	90	5.2
NJ419	95	5.2
NJ420	100	5.2
NJ421	105	5.2
NJ422	110	5.2
NJ424	120	5.2
NJ426	130	5.2
NJ428	140	5.2
NJ430	150	5.2
NJ436	180	5.2
NJ5208	40	5.2
NJ5209	45	5.2
NJ5210	50	5.2
NJ5211	55	5.2
NJ5212	60	5.2
NJ5213	65	5.2
NJ5214	70	5.2
NJ5215	75	5.2
NJ5216	80	5.2
NJ5217	85	5.2
NJ5218	90	5.2
NJ5219	95	5.2
NJ5220	100	5.2
NJ5221	105	5.2
NJ5222	110	5.2
NJ5224	120	5.2
NJ5226	130	5.2
NJ5228	140	5.2
NJ5230	150	5.2
NJ5232	160	5.2
NJ5234	170	5.2
NJF2305 V	25	5.9
NJF2306 V	30	5.9
NJF2307 V	35	5.9
NJF2308 V	40	5.9
NJF2309 V	45	5.9
NJF2310 V	50	5.9
NJF2311 V	55	5.9
NJF2312 V	60	5.9
NJF2313 V	65	5.9
NJF2314 V	70	5.9
NJF2315 V	75	5.9
NJF2316 V	80	5.9
NJF2317 V	85	5.9
NJF2318 V	90	5.9
NJF2319 V	95	5.9
NJF2320 V	100	5.9
NJF2322 V	110	5.9
NJF2324 V	120	5.9
NJP10/500	500	5.2
NJP10/530	530	5.2
NJP10/560	560	5.2
NJP10/600	600	5.2
NJP10/630	630	5.2
NJP10/670	670	5.2
NJP10/710	710	5.2
NJP10/750	750	5.2
NJP10/800	800	5.2
NJP1005	25	5.2
NJP1006	30	5.2
NJP1007	35	5.2
NJP1008	40	5.2
NJP1009	45	5.2
NJP100X180X60,3	100	5.2
NJP1010	50	5.2
NJP1011	55	5.2
NJP1012	60	5.2
NJP1013	65	5.2
NJP1014	70	5.2
NJP1015	75	5.2

Index	d [mm]	Tab.No
NJP1016	80	5.2
NJP1017	85	5.2
NJP1018	90	5.2
NJP1019	95	5.2
NJP1020	100	5.2
NJP1021	105	5.2
NJP1022	110	5.2
NJP1024	120	5.2
NJP1026	130	5.2
NJP1028	140	5.2
NJP1030	150	5.2
NJP1032	160	5.2
NJP1034	170	5.2
NJP1036	180	5.2
NJP1038	190	5.2
NJP1040	200	5.2
NJP1044	220	5.2
NJP1048	240	5.2
NJP1052	260	5.2
NJP1056	280	5.2
NJP1060	300	5.2
NJP1064	320	5.2
NJP1068	340	5.2
NJP1072	360	5.2
NJP1076	380	5.2
NJP1080	400	5.2
NJP1084	420	5.2
NJP1088	440	5.2
NJP1092	460	5.2
NJP1096	480	5.2
NJP110X215X73	110	5.2
NJP118X240X80	118	5.2
NJP12/500	500	5.2
NJP12/560	560	5.2
NJP12/630	630	5.2
NJP120X240X80	120	5.2
NJP1292	460	5.2
NJP130X240X80	130	5.2
NJP130X250X80	130	5.2
NJP159X300X84	159	5.2
NJP160X300X84	160	5.2
NJP18/1000	1000	5.2
NJP18/1120	1120	5.2
NJP18/1180	1180	5.2
NJP18/1320	1320	5.2
NJP18/1600	1600	5.2
NJP18/1700	1700	5.2
NJP18/500	500	5.2
NJP18/560	560	5.2
NJP18/600	600	5.2
NJP18/630	630	5.2
NJP18/670	670	5.2
NJP18/710	710	5.2
NJP18/750	750	5.2
NJP18/800	800	5.2
NJP18/900	900	5.2
NJP1864	320	5.2
NJP1872	360	5.2
NJP1876	380	5.2
NJP1880	400	5.2
NJP1884	420	5.2
NJP1896	480	5.2
NJP19/500	500	5.2
NJP19/530	530	5.2
NJP19/560	560	5.2
NJP19/600	600	5.2
NJP19/630	630	5.2
NJP19/670	670	5.2
NJP19/710	710	5.2
NJP19/850	850	5.2
NJP19/900	900	5.2
NJP1920	100	5.2
NJP1921	105	5.2
NJP1926	130	5.2
NJP1928	140	5.2
NJP1932	160	5.2
NJP1938	190	5.2
NJP1940	200	5.2
NJP1944	220	5.2
NJP1952	260	5.2
NJP1956	280	5.2
NJP1960	300	5.2
NJP1964	320	5.2
NJP1968	340	5.2
NJP1972	360	5.2
NJP1980	400	5.2
NJP1984	420	5.2
NJP1988	440	5.2
NJP1992	460	5.2
NJP1996	480	5.2

https://nppnovoteh.com

23. INDEX

Index	d [mm]	Tab.No
NJP2/600	600	5.2
NJP20/500	500	5.2
NJP20/530	530	5.2
NJP20/560	560	5.2
NJP20/600	600	5.2
NJP20/630	630	5.2
NJP20/670	670	5.2
NJP20/710	710	5.2
NJP20/750	750	5.2
NJP20/800	800	5.2
NJP2009	45	5.2
NJP202 E	15	5.2
NJP2026	130	5.2
NJP203 E	17	5.2
NJP2032	160	5.2
NJP2034	170	5.2
NJP204 E	20	5.2
NJP205 E	25	5.2
NJP2056	280	5.2
NJP206 E	30	5.2
NJP2060	300	5.2
NJP2064	320	5.2
NJP207 E	35	5.2
NJP2072	360	5.2
NJP2076	380	5.2
NJP208 E	40	5.2
NJP2080	400	5.2
NJP2084	420	5.2
NJP2088	440	5.2
NJP209 E	45	5.2
NJP2092	460	5.2
NJP2096	480	5.2
NJP210 E	50	5.2
NJP211 E	55	5.2
NJP212 E	60	5.2
NJP213 E	65	5.2
NJP214 E	70	5.2
NJP215 E	75	5.2
NJP216 E	80	5.2
NJP217 E	85	5.2
NJP218 E	90	5.2
NJP219 E	95	5.2
NJP220 E	100	5.2
NJP2203 E	17	5.2
NJP2204 E	20	5.2
NJP2205 E	25	5.2
NJP2206 E	30	5.2
NJP2207 E	35	5.2
NJP2208 E	40	5.2
NJP2209 E	45	5.2
NJP221 E	105	5.2
NJP2210 E	50	5.2
NJP2211 E	55	5.2
NJP2212 E	60	5.2
NJP2213 E	65	5.2
NJP2214 E	70	5.2
NJP2215 E	75	5.2
NJP2216 E	80	5.2
NJP2217 E	85	5.2
NJP2218 E	90	5.2
NJP2219 E	95	5.2
NJP222 E	110	5.2
NJP2220 E	100	5.2
NJP2222 E	110	5.2
NJP2224 E	120	5.2
NJP2226 E	130	5.2
NJP2228 E	140	5.2
NJP2230 E	150	5.2
NJP2232 E	160	5.2
NJP2234 E	170	5.2
NJP2236 E	180	5.2
NJP2238 E	190	5.2
NJP224 E	120	5.2
NJP2240 E	200	5.2
NJP2244 E	220	5.2
NJP2248 E	240	5.2
NJP2252 E	260	5.2
NJP2256 E	280	5.2
NJP226 E	130	5.2
NJP2260	300	5.2
NJP2264	320	5.2
NJP2268	340	5.2
NJP2272	360	5.2
NJP2276	380	5.2
NJP228 E	140	5.2
NJP2292	460	5.2
NJP230 E	150	5.2
NJP2304 E	20	5.2
NJP2305 E	25	5.2
NJP2306 E	30	5.2

Index	d [mm]	Tab.No
NJP2307 E	35	5.2
NJP2308 E	40	5.2
NJP2309 E	45	5.2
NJP2310 E	50	5.2
NJP2311 E	55	5.2
NJP2312 E	60	5.2
NJP2313 E	65	5.2
NJP2314 E	70	5.2
NJP2315 E	75	5.2
NJP2316 E	80	5.2
NJP2317 E	85	5.2
NJP2318 E	90	5.2
NJP2319 E	95	5.2
NJP232 E	160	5.2
NJP2320 E	100	5.2
NJP2322 E	110	5.2
NJP2324 E	120	5.2
NJP2326 E	130	5.2
NJP2328 E	140	5.2
NJP2330 E	150	5.2
NJP2332 E	160	5.2
NJP2334 E	170	5.2
NJP2336 E	180	5.2
NJP2338 E	190	5.2
NJP234 E	170	5.2
NJP2340 E	200	5.2
NJP2344 E	220	5.2
NJP2348 E	240	5.2
NJP2352 E	260	5.2
NJP2356 E	280	5.2
NJP236 E	180	5.2
NJP2360	300	5.2
NJP2372	360	5.2
NJP238 E	190	5.2
NJP240 E	200	5.2
NJP244 E	220	5.2
NJP248 E	240	5.2
NJP252 E	260	5.2
NJP256 E	280	5.2
NJP260 E	300	5.2
NJP264 E	320	5.2
NJP28/1000	1000	5.2
NJP28/500	500	5.2
NJP28/530	530	5.2
NJP28/600	600	5.2
NJP28/630	630	5.2
NJP28/850	850	5.2
NJP28/900	900	5.2
NJP2840	200	5.2
NJP2860	300	5.2
NJP2864	320	5.2
NJP2868	340	5.2
NJP2888	440	5.2
NJP2892	460	5.2
NJP2896	480	5.2
NJP29/1000	1000	5.2
NJP29/1060	1060	5.2
NJP29/1180	1180	5.2
NJP29/1320	1320	5.2
NJP29/500	500	5.2
NJP29/530	530	5.2
NJP29/560	560	5.2
NJP29/600	600	5.2
NJP29/630	630	5.2
NJP29/710	710	5.2
NJP29/900	900	5.2
NJP29/950	950	5.2
NJP2924	120	5.2
NJP2926	130	5.2
NJP2928	140	5.2
NJP2932	160	5.2
NJP2944	220	5.2
NJP2952	260	5.2
NJP2968	340	5.2
NJP2972	360	5.2
NJP2984	420	5.2
NJP2988	440	5.2
NJP2992	460	5.2
NJP2996	480	5.2
NJP30/1120	1120	5.2
NJP30/500	500	5.2
NJP30/530 E	530	5.2
NJP30/600	600	5.2
NJP30/630	630	5.2
NJP30/670	670	5.2
NJP3013	65	5.2
NJP302 E	15	5.2
NJP303 E	17	5.2
NJP3030	150	5.2
NJP3034	170	5.2

Index	d [mm]	Tab.No
NJP3036	180	5.2
NJP3038	190	5.2
NJP304 E	20	5.2
NJP3040	200	5.2
NJP3048	240	5.2
NJP305 E	25	5.2
NJP3052	260	5.2
NJP306 E	30	5.2
NJP3060	300	5.2
NJP3064	320	5.2
NJP3068	340	5.2
NJP307 E	35	5.2
NJP3072	360	5.2
NJP3076	380	5.2
NJP308 E	40	5.2
NJP3080	400	5.2
NJP3084	420	5.2
NJP309 E	45	5.2
NJP3092	460	5.2
NJP3096	480	5.2
NJP31/500	500	5.2
NJP31/530	530	5.2
NJP31/560	560	5.2
NJP310 E	50	5.2
NJP311 E	55	5.2
NJP312 E	60	5.2
NJP313 E	65	5.2
NJP3132	160	5.2
NJP3138	190	5.2
NJP314 E	70	5.2
NJP3144	220	5.2
NJP315 E	75	5.2
NJP3152	260	5.2
NJP3156	280	5.2
NJP316 E	80	5.2
NJP3160	300	5.2
NJP3164	320	5.2
NJP3168	340	5.2
NJP317 E	85	5.2
NJP3172	360	5.2
NJP318 E	90	5.2
NJP3184	420	5.2
NJP3188	440	5.2
NJP319 E	95	5.2
NJP3192	460	5.2
NJP3196	480	5.2
NJP320 E	100	5.2
NJP3206	30	5.2
NJP3207	35	5.2
NJP3208	40	5.2
NJP3209	45	5.2
NJP321 E	105	5.2
NJP3210	50	5.2
NJP3211	55	5.2
NJP3212	60	5.2
NJP3213	65	5.2
NJP3214	70	5.2
NJP3215	75	5.2
NJP3216	80	5.2
NJP3217	85	5.2
NJP3218	90	5.2
NJP3219	95	5.2
NJP322 E	110	5.2
NJP3220	100	5.2
NJP3221	105	5.2
NJP3222	110	5.2
NJP3224	120	5.2
NJP3226	130	5.2
NJP3228	140	5.2
NJP3230	150	5.2
NJP3232	160	5.2
NJP3234	170	5.2
NJP3236	180	5.2
NJP3238	190	5.2
NJP324 E	120	5.2
NJP3240	200	5.2
NJP3244	220	5.2
NJP3248	240	5.2
NJP3252	260	5.2
NJP326 E	130	5.2
NJP328 E	140	5.2
NJP330 E	150	5.2
NJP3306	30	5.2
NJP3307	35	5.2
NJP3308	40	5.2
NJP3309	45	5.2
NJP3310	50	5.2
NJP3311	55	5.2
NJP3312	60	5.2
NJP3313	65	5.2

Index	d [mm]	Tab.No
NJP3314	70	5.2
NJP3315	75	5.2
NJP3316	80	5.2
NJP3317	85	5.2
NJP3318	90	5.2
NJP3319	95	5.2
NJP332 E	160	5.2
NJP3320	100	5.2
NJP3321	105	5.2
NJP3322	110	5.2
NJP3324	120	5.2
NJP3326	130	5.2
NJP3328	140	5.2
NJP3330	150	5.2
NJP3332	160	5.2
NJP3334	170	5.2
NJP3336	180	5.2
NJP3338	190	5.2
NJP334 E	170	5.2
NJP3340	200	5.2
NJP3344	220	5.2
NJP3348	240	5.2
NJP3352	260	5.2
NJP336 E	180	5.2
NJP338 E	190	5.2
NJP340 E	200	5.2
NJP344 E	220	5.2
NJP348 E	240	5.2
NJP352 E	260	5.2
NJP356 E	280	5.2
NJP364	320	5.2
NJP38/500	500	5.2
NJP38/950	950	5.2
NJP3856	280	5.2
NJP3860	300	5.2
NJP3868	340	5.2
NJP3876	380	5.2
NJP3880	400	5.2
NJP3884	420	5.2
NJP39/1060	1060	5.2
NJP39/500	500	5.2
NJP3988	440	5.2
NJP406	30	5.2
NJP407	35	5.2
NJP408	40	5.2
NJP409	45	5.2
NJP410	50	5.2
NJP411	55	5.2
NJP412	60	5.2
NJP413	65	5.2
NJP414	70	5.2
NJP415	75	5.2
NJP416	80	5.2
NJP417	85	5.2
NJP418	90	5.2
NJP419	95	5.2
NJP420	100	5.2
NJP421	105	5.2
NJP422	110	5.2
NJP424	120	5.2
NJP426	130	5.2
NJP428	140	5.2
NJP430	150	5.2
NJP436	180	5.2
NJP5208	40	5.2
NJP5209	45	5.2
NJP5210	50	5.2
NJP5211	55	5.2
NJP5212	60	5.2
NJP5213	65	5.2
NJP5214	70	5.2
NJP5215	75	5.2
NJP5216	80	5.2
NJP5217	85	5.2
NJP5218	90	5.2
NJP5219	95	5.2
NJP5220	100	5.2
NJP5221	105	5.2
NJP5222	110	5.2
NJP5224	120	5.2
NJP5226	130	5.2
NJP5228	140	5.2
NJP5230	150	5.2
NJP5232	160	5.2
NJP5234	170	5.2
NK10/12	10	6.1
NK10/16	10	6.1
NK100/26	100	6.1
NK100/36	100	6.1
NK105/26	105	6.1

Index	d [mm]	Tab.No
NK105/36	105	6.1
NK110/30	110	6.1
NK110/40	110	6.1
NK12/12	12	6.1
NK12/16	12	6.1
NK14/16	14	6.1
NK14/20	14	6.1
NK15/16	15	6.1
NK15/20	15	6.1
NK16/16	16	6.1
NK16/20	16	6.1
NK17/16	17	6.1
NK17/20	17	6.1
NK18/16	18	6.1
NK18/20	18	6.1
NK19/16	19	6.1
NK19/20	19	6.1
NK20/16	20	6.1
NK20/20	20	6.1
NK21/16	21	6.1
NK21/20	21	6.1
NK22/16	22	6.1
NK22/20	22	6.1
NK24/16	24	6.1
NK24/20	24	6.1
NK25/16	25	6.1
NK25/20	25	6.1
NK26/16	26	6.1
NK26/20	26	6.1
NK28/20	28	6.1
NK28/30	28	6.1
NK29/20	29	6.1
NK29/30	29	6.1
NK30/20	30	6.1
NK30/30	30	6.1
NK32/20	32	6.1
NK32/30	32	6.1
NK35/20	35	6.1
NK35/30	35	6.1
NK37/20	37	6.1
NK37/30	37	6.1
NK38/20	38	6.1
NK38/30	38	6.1
NK40/20	40	6.1
NK40/30	40	6.1
NK42/20	42	6.1
NK42/30	42	6.1
NK43/20	43	6.1
NK43/30	43	6.1
NK45/20	45	6.1
NK45/30	45	6.1
NK47/20	47	6.1
NK47/30	47	6.1
NK5/10	5	6.1
NK5/12	5	6.1
NK50/25	50	6.1
NK50/35	50	6.1
NK55/25	55	6.1
NK55/35	55	6.1
NK6/10	6	6.1
NK6/12	6	6.1
NK60/25	60	6.1
NK60/35	60	6.1
NK65/25	65	6.1
NK65/35	65	6.1
NK68/25	68	6.1
NK68/35	68	6.1
NK7/10	7	6.1
NK7/12	7	6.1
NK70/25	70	6.1
NK70/35	70	6.1
NK73/25	73	6.1
NK73/35	73	6.1
NK75/25	75	6.1
NK75/35	75	6.1
NK8/12	8	6.1
NK8/16	8	6.1
NK80/25	80	6.1
NK80/35	80	6.1
NK85/25	85	6.1
NK85/35	85	6.1
NK9/12	9	6.1
NK9/16	9	6.1
NK90/25	90	6.1
NK90/35	90	6.1
NK95/26	95	6.1
NK95/36	95	6.1
NKI10/16	10	6.1
NKI10/20	10	6.1
NKI100/30	100	6.1

Index	d [mm]	Tab.No
NKI100/40	100	6.1
NKI12/16	12	6.1
NKI12/20	12	6.1
NKI15/16	15	6.1
NKI15/20	15	6.1
NKI17/16	17	6.1
NKI17/20	17	6.1
NKI20/16	20	6.1
NKI20/20	20	6.1
NKI22/16	22	6.1
NKI22/20	22	6.1
NKI25/20	25	6.1
NKI25/30	25	6.1
NKI28/20	28	6.1
NKI28/30	28	6.1
NKI30/20	30	6.1
NKI30/30	30	6.1
NKI32/20	32	6.1
NKI32/30	32	6.1
NKI35/20	35	6.1
NKI35/30	35	6.1
NKI38/20	38	6.1
NKI38/30	38	6.1
NKI40/20	40	6.1
NKI40/30	40	6.1
NKI42/20	42	6.1
NKI42/30	42	6.1
NKI45/25	45	6.1
NKI45/35	45	6.1
NKI5/12	5	6.1
NKI5/16	5	6.1
NKI50/25	50	6.1
NKI50/35	50	6.1
NKI55/25	55	6.1
NKI55/35	55	6.1
NKI6/12	6	6.1
NKI6/16	6	6.1
NKI60/25	60	6.1
NKI60/35	60	6.1
NKI65/25	65	6.1
NKI65/35	65	6.1
NKI7/12	7	6.1
NKI7/16	7	6.1
NKI70/25	70	6.1
NKI70/35	70	6.1
NKI75/25	75	6.1
NKI75/35	75	6.1
NKI80/25	80	6.1
NKI80/35	80	6.1
NKI85/26	85	6.1
NKI85/36	85	6.1
NKI9/12	9	6.1
NKI9/16	9	6.1
NKI90/26	90	6.1
NKI90/36	90	6.1
NKI95/26	95	6.1
NKI95/36	95	6.1
NKIA 59/22	22	6.7
NKIA 5901	12	6.7
NKIA 5902	15	6.7
NKIA 5903	17	6.7
NKIA 5904	20	6.7
NKIA 5905	25	6.7
NKIA 5906	30	6.7
NKIA 5907	35	6.7
NKIA 5908	40	6.7
NKIA 5909	45	6.7
NKIA 5910	50	6.7
NKIA 5911	55	6.7
NKIA 5912	60	6.7
NKIA 5913	65	6.7
NKIA 5914	70	6.7
NKIB 59/22	22	6.7
NKIB 5901	12	6.7
NKIB 5902	15	6.7
NKIB 5903	17	6.7
NKIB 5904	20	6.7
NKIB 5905	25	6.7
NKIB 5906	30	6.7
NKIB 5907	35	6.7
NKIB 5908	40	6.7
NKIB 5909	45	6.7
NKIB 5910	50	6.7
NKIB 5911	55	6.7
NKIB 5912	60	6.7
NKIB 5913	65	6.7
NKIB 5914	70	6.7
NKIS15	15	6.1
NKIS17	17	6.1
NKIS20	20	6.1
NKIS25	25	6.1
NKIS30	30	6.1
NKIS35	35	6.1
NKIS40	40	6.1
NKIS45	45	6.1
NKIS50	50	6.1
NKIS55	55	6.1
NKIS60	60	6.1
NKIS65	65	6.1
NKS20	20	6.1
NKS22	22	6.1
NKS24	24	6.1
NKS25	25	6.1
NKS28	28	6.1
NKS30	30	6.1
NKS32	32	6.1
NKS35	35	6.1
NKS37	37	6.1
NKS40	40	6.1
NKS43	43	6.1
NKS45	45	6.1
NKS50	50	6.1
NKS55	55	6.1
NKS60	60	6.1
NKS65	65	6.1
NKS70	70	6.1
NKS75	75	6.1
NKX 10	10	6.8
NKX 10 Z	10	6.8
NKX 12	12	6.8
NKX 12 Z	12	6.8
NKX 15	15	6.8
NKX 15 Z	15	6.8
NKX 17	17	6.8
NKX 17 Z	17	6.8
NKX 20	20	6.8
NKX 20 Z	20	6.8
NKX 25	25	6.8
NKX 25 Z	25	6.8
NKX 30	30	6.8
NKX 30 Z	30	6.8
NKX 35	35	6.8
NKX 35 Z	35	6.8
NKX 40	40	6.8
NKX 40 Z	40	6.8
NKX 45	45	6.8
NKX 45 Z	45	6.8
NKX 50	50	6.8
NKX 50 Z	50	6.8
NKX 60	60	6.8
NKX 60 Z	60	6.8
NKX 70	70	6.8
NKX 70 Z	70	6.8
NKXR 15	15	6.9
NKXR 15 Z	15	6.9
NKXR 17	17	6.9
NKXR 17 Z	17	6.9
NKXR 20	20	6.9
NKXR 20 Z	20	6.9
NKXR 25	25	6.9
NKXR 25 Z	25	6.9
NKXR 30	30	6.9
NKXR 30 Z	30	6.9
NKXR 35	35	6.9
NKXR 35 Z	35	6.9
NKXR 40	40	6.9
NKXR 40 Z	40	6.9
NKXR 45	45	6.9
NKXR 45 Z	45	6.9
NKXR 50	50	6.9
NKXR 50 Z	50	6.9
NN30/500	500	5.7
NN30/500 K	500	5.7
NN30/600	600	5.7
NN30/600 K	600	5.7
NN3005	25	5.7
NN3005 K	25	5.7
NN3006	30	5.7
NN3006 K	30	5.7
NN3007	35	5.7
NN3007 K	35	5.7
NN3008	40	5.7
NN3008 K	40	5.7
NN3009	45	5.7
NN3009 K	45	5.7
NN3010	50	5.7
NN3010 K	50	5.7
NN3011	55	5.7
NN3011 K	55	5.7
NN3012	60	5.7
NN3012 K	60	5.7
NN3013	65	5.7
NN3013 K	65	5.7
NN3014	70	5.7
NN3014 K	70	5.7
NN3015	75	5.7
NN3015 K	75	5.7
NN3016	80	5.7
NN3016 K	80	5.7
NN3017	85	5.7
NN3017 K	85	5.7
NN3018	90	5.7
NN3018 K	90	5.7
NN3019	95	5.7
NN3019 K	95	5.7
NN3020	100	5.7
NN3020 K	100	5.7
NN3021	105	5.7
NN3021 K	105	5.7
NN3022	110	5.7
NN3022 K	110	5.7
NN3024	120	5.7
NN3024 K	120	5.7
NN3026	130	5.7
NN3026 K	130	5.7
NN3028	140	5.7
NN3028 K	140	5.7
NN3030	150	5.7
NN3030 K	150	5.7
NN3032	160	5.7
NN3032 K	160	5.7
NN3034	170	5.7
NN3034 K	170	5.7
NN3036	180	5.7
NN3036 K	180	5.7
NN3038	190	5.7
NN3038 K	190	5.7
NN3040	200	5.7
NN3040 K	200	5.7
NN3044	220	5.7
NN3044 K	220	5.7
NN3048	240	5.7
NN3048 K	240	5.7
NN3052	260	5.7
NN3052 K	260	5.7
NN3056	280	5.7
NN3056 K	280	5.7
NN3060	300	5.7
NN3060 K	300	5.7
NN3064	320	5.7
NN3064 K	320	5.7
NN3068	340	5.7
NN3068 K	340	5.7
NN3072	360	5.7
NN3072 K	360	5.7
NN3076	380	5.7
NN3076 K	380	5.7
NN3080	400	5.7
NN3080 K	400	5.7
NN3084	420	5.7
NN3084 K	420	5.7
NN3088	440	5.7
NN3088 K	440	5.7
NN3092	460	5.7
NN3092 K	460	5.7
NN3096	480	5.7
NN3096 K	480	5.7
NN3120	100	5.7
NN3120 K	100	5.7
NN3122	110	5.7
NN3122 K	110	5.7
NN3124	120	5.7
NN3124 K	120	5.7
NN3126	130	5.7
NN3126 K	130	5.7
NN3128	140	5.7
NN3128 K	140	5.7
NN3132	160	5.7
NN3132 K	160	5.7
NN3134	170	5.7
NN3134 K	170	5.7
NN3136	180	5.7
NN3136 K	180	5.7
NN3138	190	5.7
NN3138 K	190	5.7
NN3140	200	5.7
NN3140 K	200	5.7
NN3144	220	5.7
NN3144 K	220	5.7
NN3148	240	5.7
NN3148 K	240	5.7
NN3156	280	5.7
NN3156 K	280	5.7
NN3160	300	5.7
NN3160 K	300	5.7
NN3164	320	5.7
NN3164 K	320	5.7
NN3172	360	5.7
NN3172 K	360	5.7
NN3176	380	5.7
NN3176 K	380	5.7
NN3184	420	5.7
NN3184 K	420	5.7
NN3196	480	5.7
NN3196 K	480	5.7
NN3972	360	5.7
NN3972 K	360	5.7
NN3980	400	5.7
NN3980 K	400	5.7
NN3984	420	5.7
NN3984 K	420	5.7
NN4022	110	5.7
NN4022 K	110	5.7
NN4024	120	5.7
NN4024 K	120	5.7
NN4052	260	5.7
NN4052 K	260	5.7
NN4836	180	5.7
NN4836 K	180	5.7
NN4872	360	5.7
NN4872 K	360	5.7
NN49/560	560	5.7
NN49/560 K	560	5.7
NN4920	100	5.7
NN4920 K	100	5.7
NN4921	105	5.7
NN4921 K	105	5.7
NN4922	110	5.7
NN4922 K	110	5.7
NN4924	120	5.7
NN4924 K	120	5.7
NN4926	130	5.7
NN4926 K	130	5.7
NN4928	140	5.7
NN4928 K	140	5.7
NN4930	150	5.7
NN4930 K	150	5.7
NN4932	160	5.7
NN4932 K	160	5.7
NN4934	170	5.7
NN4934 K	170	5.7
NN4936	180	5.7
NN4936 K	180	5.7
NN4938	190	5.7
NN4938 K	190	5.7
NN4940	200	5.7
NN4940 K	200	5.7
NN4944	220	5.7
NN4944 K	220	5.7
NN4948	240	5.7
NN4948 K	240	5.7
NN4952	260	5.7
NN4952 K	260	5.7
NN4956	280	5.7
NN4956 K	280	5.7
NN4960	300	5.7
NN4960 K	300	5.7
NN4964	320	5.7
NN4964 K	320	5.7
NN4992	460	5.7
NN4992 K	460	5.7
NNC4830 V	150	5.9
NNC4832 V	160	5.9
NNC4834 V	170	5.9
NNC4836 V	180	5.9
NNC4838 V	190	5.9
NNC4840 V	200	5.9
NNC4844 V	220	5.9
NNC4848 V	240	5.9
NNC4852 V	260	5.9
NNC4856 V	280	5.9
NNC4860 V	300	5.9
NNC4864 V	320	5.9
NNC4868 V	340	5.9
NNC4872 V	360	5.9
NNC4876 V	380	5.9
NNC4880 V	400	5.9
NNC4912 V	60	5.9
NNC4914 V	70	5.9
NNC4916 V	80	5.9
NNC4918 V	90	5.9
NNC4920 V	100	5.9
NNC4922 V	110	5.9
NNC4924 V	120	5.9
NNC4926 V	130	5.9
NNC4928 V	140	5.9
NNC4930 V	150	5.9
NNC4932 V	160	5.9
NNC4934 V	170	5.9
NNC4936 V	180	5.9
NNC4938 V	190	5.9
NNC4940 V	200	5.9
NNC4944 V	220	5.9
NNC4948 V	240	5.9
NNC4952 V	260	5.9
NNC4956 V	280	5.9
NNC4960 V	300	5.9
NNC4964 V	320	5.9
NNC4968 V	340	5.9
NNC4972 V	360	5.9
NNC4976 V	380	5.9
NNC4980 V	400	5.9
NNCF5004 V	20	5.9
NNCF5005 V	25	5.9
NNCF5006 V	30	5.9
NNCF5007 V	35	5.9
NNCF5008 V	40	5.9
NNCF5009 V	45	5.9
NNCF5010 V	50	5.9
NNCF5011 V	55	5.9
NNCF5012 V	60	5.9
NNCF5013 V	65	5.9
NNCF5014 V	70	5.9
NNCF5015 V	75	5.9
NNCF5016 V	80	5.9
NNCF5017 V	85	5.9
NNCF5018 V	90	5.9
NNCF5020 V	100	5.9
NNCF5022 V	110	5.9
NNCF5024 V	120	5.9
NNCF5026 V	130	5.9
NNCF5028 V	140	5.9
NNCF5030 V	150	5.9
NNCL4830 V	150	5.9
NNCL4832 V	160	5.9
NNCL4834 V	170	5.9
NNCL4836 V	180	5.9
NNCL4838 V	190	5.9
NNCL4840 V	200	5.9
NNCL4844 V	220	5.9
NNCL4848 V	240	5.9
NNCL4852 V	260	5.9
NNCL4856 V	280	5.9
NNCL4860 V	300	5.9
NNCL4864 V	320	5.9
NNCL4868 V	340	5.9
NNCL4872 V	360	5.9
NNCL4876 V	380	5.9
NNCL4880 V	400	5.9
NNCL4912 V	60	5.9
NNCL4914 V	70	5.9
NNCL4916 V	80	5.9
NNCL4918 V	90	5.9
NNCL4920 V	100	5.9
NNCL4922 V	110	5.9
NNCL4924 V	120	5.9
NNCL4926 V	130	5.9
NNCL4928 V	140	5.9
NNCL4930 V	150	5.9
NNCL4932 V	160	5.9
NNCL4934 V	170	5.9
NNCL4936 V	180	5.9
NNCL4938 V	190	5.9
NNCL4940 V	200	5.9
NNCL4944 V	220	5.9
NNCL4948 V	240	5.9
NNCL4952 V	260	5.9
NNCL4956 V	280	5.9
NNCL4960 V	300	5.9
NNCL4964 V	320	5.9
NNCL4968 V	340	5.9
NNCL4972 V	360	5.9
NNCL4976 V	380	5.9
NNCL4980 V	400	5.9
NNF5004 V	20	5.9
NNF5005 V	25	5.9
NNF5006 V	30	5.9
NNF5007 V	35	5.9
NNF5008 V	40	5.9
NNF5009 V	45	5.9

https://nppnovoteh.com

23. INDEX

Index	d [mm]	Tab.No
NNF5010 V	50	5.9
NNF5011 V	55	5.9
NNF5012 V	60	5.9
NNF5013 V	65	5.9
NNF5014 V	70	5.9
NNF5015 V	75	5.9
NNF5016 V	80	5.9
NNF5017 V	85	5.9
NNF5018 V	90	5.9
NNF5019 V	95	5.9
NNF5020 V	100	5.9
NNF5022 V	110	5.9
NNF5024 V	120	5.9
NNF5026 V	130	5.9
NNF5026 V	130	5.9
NNF5028 V	140	5.9
NNF5028 V	140	5.9
NNF5030 V	150	5.9
NNF5030 V	150	5.9
NNF5032 V	160	5.9
NNF5032 V	160	5.9
NNF5034 V	170	5.9
NNF5034 V	170	5.9
NNF5036 V	180	5.9
NNF5036 V	180	5.9
NNF5038 V	190	5.9
NNF5038 V	190	5.9
NNF5040 V	200	5.9
NNF5040 V	200	5.9
NNF5044 V	220	5.9
NNF5044 V	220	5.9
NNF5048 V	240	5.9
NNF5048 V	240	5.9
NNF5052 V	260	5.9
NNF5052 V	260	5.9
NNF5056 V	280	5.9
NNF5060 V	300	5.9
NNF5060 V	300	5.9
NNU4184	420	5.8
NNU49/500	500	5.8
NNU49/500 K	500	5.8
NNU49/500 KV	500	5.8
NNU49/500 V	500	5.8
NNU4920	100	5.8
NNU4920 K	100	5.8
NNU4920 KV	100	5.8
NNU4920 V	100	5.8
NNU4921	105	5.8
NNU4921 K	105	5.8
NNU4921 KV	105	5.8
NNU4921 V	105	5.8
NNU4922	110	5.8
NNU4922 K	110	5.8
NNU4922 KV	110	5.8
NNU4922 V	110	5.8
NNU4924	120	5.8
NNU4924 K	120	5.8
NNU4924 KV	120	5.8
NNU4924 V	120	5.8
NNU4926	130	5.8
NNU4926 K	130	5.8
NNU4926 KV	130	5.8
NNU4926 V	130	5.8
NNU4928	140	5.8
NNU4928 K	140	5.8
NNU4928 KV	140	5.8
NNU4928 V	140	5.8
NNU4930	150	5.8
NNU4930 K	150	5.8
NNU4930 KV	150	5.8
NNU4930 V	150	5.8
NNU4932	160	5.8
NNU4932 K	160	5.8
NNU4932 KV	160	5.8
NNU4932 V	160	5.8
NNU4934	170	5.8
NNU4934 K	170	5.8
NNU4934 KV	170	5.8
NNU4934 V	170	5.8
NNU4936	180	5.8
NNU4936 K	180	5.8
NNU4936 KV	180	5.8
NNU4936 V	180	5.8
NNU4938	190	5.8
NNU4938 K	190	5.8
NNU4938 KV	190	5.8
NNU4938 V	190	5.8
NNU4940	200	5.8
NNU4940 K	200	5.8
NNU4940 KV	200	5.8
NNU4940 V	200	5.8
NNU4944	220	5.8
NNU4944 K	220	5.8
NNU4944 KV	220	5.8
NNU4944 V	220	5.8
NNU4948	240	5.8
NNU4948 K	240	5.8
NNU4948 KV	240	5.8
NNU4948 V	240	5.8
NNU4952	260	5.8
NNU4952 K	260	5.8
NNU4952 KV	260	5.8
NNU4952 V	260	5.8
NNU4956	280	5.8
NNU4956 K	280	5.8
NNU4956 KV	280	5.8
NNU4956 V	280	5.8
NNU4960	300	5.8
NNU4960 K	300	5.8
NNU4960 KV	300	5.8
NNU4960 V	300	5.8
NNU4964	320	5.8
NNU4964 K	320	5.8
NNU4964 KV	320	5.8
NNU4964 V	320	5.8
NNU4968	340	5.8
NNU4968 K	340	5.8
NNU4968 KV	340	5.8
NNU4968 V	340	5.8
NNU4972	360	5.8
NNU4972 K	360	5.8
NNU4972 KV	360	5.8
NNU4972 V	360	5.8
NNU4976	380	5.8
NNU4976 K	380	5.8
NNU4976 KV	380	5.8
NNU4976 V	380	5.8
NNU4980	400	5.8
NNU4980 K	400	5.8
NNU4980 KV	400	5.8
NNU4980 V	400	5.8
NNU4984	420	5.8
NNU4984 K	420	5.8
NNU4984 KV	420	5.8
NNU4984 V	420	5.8
NNU4988	440	5.8
NNU4988 K	440	5.8
NNU4988 KV	440	5.8
NNU4988 V	440	5.8
NNU4992	460	5.8
NNU4992 K	460	5.8
NNU4992 KV	460	5.8
NNU4992 V	460	5.8
NNU4996	480	5.8
NNU4996 K	480	5.8
NNU4996 KV	480	5.8
NNU4996 V	480	5.8
NNU6012	60	5.8
NNU6012 V	60	5.8
NNU6013	65	5.8
NNU6013 V	65	5.8
NNU6014	70	5.8
NNU6014 V	70	5.8
NNU6015	75	5.8
NNU6015 V	75	5.8
NNU6016	80	5.8
NNU6016 V	80	5.8
NNU6017	85	5.8
NNU6017 V	85	5.8
NNU6018	90	5.8
NNU6018 V	90	5.8
NNU6019	95	5.8
NNU6019 V	95	5.8
NNU6020	100	5.8
NNU6020 V	100	5.8
NNU6021	105	5.8
NNU6021 V	105	5.8
NNU6022	110	5.8
NNU6022 V	110	5.8
NNU6024	120	5.8
NNU6024 V	120	5.8
NNU6026	130	5.8
NNU6026 V	130	5.8
NNU6028	140	5.8
NNU6028 V	140	5.8
NNU6030	150	5.8
NNU6030 V	150	5.8
NNU6032	160	5.8
NNU6032 V	160	5.8
NNU6034	170	5.8
NNU6034 V	170	5.8
NNU6036	180	5.8
NNU6036 V	180	5.8
NNU6038	190	5.8
NNU6038 V	190	5.8
NNU6040	200	5.8
NNU6040 V	200	5.8
NNU6044	220	5.8
NNU6044 V	220	5.8
NNU6048	240	5.8
NNU6048 V	240	5.8
NNU6052	260	5.8
NNU6052 V	260	5.8
NNU6056	280	5.8
NNU6056 V	280	5.8
NNU6060	300	5.8
NNU6060 V	300	5.8
NNU6064	320	5.8
NNU6064 V	320	5.8
NP10/500	500	5.6
NP10/560	560	5.6
NP10/800	800	5.6
NP18/1600	1600	5.6
NP18/500	500	5.6
NP18/670	670	5.6
NP18/710	710	5.6
NP1872	360	5.6
NP1880	400	5.6
NP1892	460	5.6
NP19/500	500	5.6
NP19/530	530	5.6
NP19/560	560	5.6
NP19/600	600	5.6
NP19/630	630	5.6
NP19/710	710	5.6
NP19/750	750	5.6
NP19/850	850	5.6
NP1920	100	5.6
NP1921	105	5.6
NP1926	130	5.6
NP1928	140	5.6
NP1932	160	5.6
NP1952	260	5.6
NP1956	280	5.6
NP1960	300	5.6
NP1968	340	5.6
NP1972	360	5.6
NP1984	420	5.6
NP1992	460	5.6
NP1996	480	5.6
NP20/1250	1250	5.6
NP202 E	15	5.6
NP203 E	17	5.6
NP204 E	20	5.6
NP205 E	25	5.6
NP206 E	30	5.6
NP207 E	35	5.6
NP208 E	40	5.6
NP209 E	45	5.6
NP210 E	50	5.6
NP211 E	55	5.6
NP212 E	60	5.6
NP213 E	65	5.6
NP214 E	70	5.6
NP215 E	75	5.6
NP216 E	80	5.6
NP217 E	85	5.6
NP218 E	90	5.6
NP219 E	95	5.6
NP220 E	100	5.6
NP221 E	105	5.6
NP222 E	110	5.6
NP2220 E	100	5.6
NP2222 E	110	5.6
NP2224 E	120	5.6
NP2226 E	130	5.6
NP2228 E	140	5.6
NP2230 E	150	5.6
NP2232 E	160	5.6
NP2234 E	170	5.6
NP2236 E	180	5.6
NP2238	190	5.6
NP224 E	120	5.6
NP2240	200	5.6
NP2244	220	5.6
NP2248	240	5.6
NP2252	260	5.6
NP226 E	130	5.6
NP228 E	140	5.6
NP230 E	150	5.6
NP232 E	160	5.6
NP2320 E	100	5.6
NP2321	105	5.6
NP2322 E	120	5.6
NP2324 E	120	5.6
NP2326 E	130	5.6
NP2328 E	140	5.6
NP2330 E	150	5.6
NP2332 E	160	5.6
NP2334	170	5.6
NP2336	180	5.6
NP2338	190	5.6
NP234 E	170	5.6
NP2340	200	5.6
NP2344	220	5.6
NP2348	240	5.6
NP2352	260	5.6
NP236 E	180	5.6
NP238 E	190	5.6
NP240 E	200	5.6
NP244 E	220	5.6
NP248 E	240	5.6
NP252 E	260	5.6
NP256 E	280	5.6
NP260 E	300	5.6
NP264 E	320	5.6
NP28/1000	1000	5.6
NP28/1060	1060	5.6
NP28/1400	1400	5.6
NP28/630	630	5.6
NP28/710	710	5.6
NP28/850	850	5.6
NP28/900	900	5.6
NP29/500	500	5.6
NP29/530	530	5.6
NP29/560	560	5.6
NP29/630	630	5.6
NP29/710	710	5.6
NP29/850	850	5.6
NP2924	120	5.6
NP2926	130	5.6
NP2928	140	5.6
NP2932	160	5.6
NP2944	220	5.6
NP2952	260	5.6
NP2968	340	5.6
NP2972	360	5.6
NP2996	480	5.6
NP30/1060	1060	5.6
NP30/1320	1320	5.6
NP30/530 E	530	5.6
NP3030	150	5.6
NP3034	170	5.6
NP3036	180	5.6
NP3038	190	5.6
NP304 E	20	5.6
NP3040	200	5.6
NP3048	240	5.6
NP305 E	25	5.6
NP306 E	30	5.6
NP3060	300	5.6
NP3064	320	5.6
NP3068	340	5.6
NP307 E	35	5.6
NP3072	360	5.6
NP3076	380	5.6
NP308 E	40	5.6
NP3080	400	5.6
NP3084	420	5.6
NP309 E	45	5.6
NP3092	460	5.6
NP3096	480	5.6
NP31/560	560	5.6
NP310 E	50	5.6
NP311 E	55	5.6
NP312 E	60	5.6
NP313 E	65	5.6
NP3132	160	5.6
NP3138	190	5.6
NP314 E	70	5.6
NP3144	220	5.6
NP315 E	75	5.6
NP3152	260	5.6
NP3156	280	5.6
NP316 E	80	5.6
NP3160	300	5.6
NP317 E	85	5.6
NP318 E	90	5.6
NP319 E	95	5.6
NP320 E	100	5.6
NP321 E	105	5.6
NP322 E	110	5.6
NP3220	100	5.6
NP3221	105	5.6
NP3222	110	5.6
NP3224	120	5.6
NP3226	130	5.6
NP3228	140	5.6
NP3236	180	5.6
NP3238	190	5.6
NP324 E	120	5.6
NP3240	200	5.6
NP3244	220	5.6
NP3248	240	5.6
NP3252	260	5.6
NP326 E	130	5.6
NP328 E	140	5.6
NP330 E	150	5.6
NP332 E	160	5.6
NP3320	100	5.6
NP3326	130	5.6
NP3330	150	5.6
NP3332	160	5.6
NP3336	180	5.6
NP3338	190	5.6
NP334 E	170	5.6
NP3340	220	5.6
NP3344	220	5.6
NP3352	260	5.6
NP336 E	180	5.6
NP338 E	190	5.6
NP340 E	200	5.6
NP344 E	220	5.6
NP348 E	240	5.6
NP38/500	500	5.6
NP38/630	630	5.6
NP38/950	950	5.6
NP3856	280	5.6
NP3860	300	5.6
NP3868	340	5.6
NP3876	380	5.6
NP3880	400	5.6
NP3884	420	5.6
NP39/1180	1180	5.6
NP39/1320	1320	5.6
NP39/500	500	5.6
NP406	30	5.6
NP407	35	5.6
NP408	40	5.6
NP409	45	5.6
NP410	50	5.6
NP411	55	5.6
NP412	60	5.6
NP413	65	5.6
NP414	70	5.6
NP415	75	5.6
NP416	80	5.6
NP417	85	5.6
NP418	90	5.6
NP419	95	5.6
NP420	100	5.6
NP421	105	5.6
NP422	110	5.6
NP424	120	5.6
NP426	130	5.6
NP428	140	5.6
NP430	150	5.6
NU10/500	500	5.1
NU10/530	530	5.1
NU10/560	560	5.1
NU10/600	600	5.1
NU10/630	630	5.1
NU10/670	670	5.1
NU10/710	710	5.1
NU10/750	750	5.1
NU10/800	800	5.1
NU1005	25	5.1
NU1006	30	5.1
NU1007	35	5.1
NU1008	40	5.1
NU1009	45	5.1
NU1010	50	5.1
NU1011	55	5.1
NU1012	60	5.1
NU1013	65	5.1
NU1014	70	5.1
NU1015	75	5.1
NU1016	80	5.1
NU1017	85	5.1
NU1018	90	5.1

Index	d [mm]	Tab.No
NU1019	95	5.1
NU1020	100	5.1
NU1021	105	5.1
NU1022	110	5.1
NU1024	120	5.1
NU1026	130	5.1
NU1028	140	5.1
NU1030	150	5.1
NU1032	160	5.1
NU1034	170	5.1
NU1036	180	5.1
NU1038	190	5.1
NU1040	200	5.1
NU1044	220	5.1
NU1048	240	5.1
NU1052	260	5.1
NU1056	280	5.1
NU1060	300	5.1
NU1064	320	5.1
NU1068	340	5.1
NU1072	360	5.1
NU1076	380	5.1
NU1080	400	5.1
NU1084	420	5.1
NU1088	440	5.1
NU1092	460	5.1
NU1096	480	5.1
NU12/500	500	5.1
NU12/560	560	5.1
NU12/630	630	5.1
NU1292	460	5.1
NU18/1000	1000	5.1
NU18/1120	1120	5.1
NU18/1180	1180	5.1
NU18/1320	1320	5.1
NU18/1600	1600	5.1
NU18/1700	1700	5.1
NU18/500	500	5.1
NU18/560	560	5.1
NU18/600	600	5.1
NU18/630	630	5.1
NU18/670	670	5.1
NU18/710	710	5.1
NU18/750	750	5.1
NU18/800	800	5.1
NU18/900	900	5.1
NU1864	320	5.1
NU1872	360	5.1
NU1876	380	5.1
NU1880	400	5.1
NU1884	420	5.1
NU1896	480	5.1
NU19/500	500	5.1
NU19/530	530	5.1
NU19/560	560	5.1
NU19/600	600	5.1
NU19/630	630	5.1
NU19/670	670	5.1
NU19/710	710	5.1
NU19/850	850	5.1
NU19/900	900	5.1
NU1920	100	5.1
NU1921	105	5.1
NU1926	130	5.1
NU1928	140	5.1
NU1932	160	5.1
NU1938	190	5.1
NU1940	200	5.1
NU1944	220	5.1
NU1952	260	5.1
NU1956	280	5.1
NU1960	300	5.1
NU1964	320	5.1
NU1968	340	5.1
NU1972	360	5.1
NU1980	400	5.1
NU1984	420	5.1
NU1988	440	5.1
NU1992	460	5.1
NU1996	480	5.1
NU2/600	600	5.1
NU20/500	500	5.1
NU20/530	530	5.1
NU20/560	560	5.1
NU20/600	600	5.1
NU20/630	630	5.1
NU20/670	670	5.1
NU20/710	710	5.1
NU20/750	750	5.1
NU20/800	800	5.1

Index	d [mm]	Tab.No
NU2009	45	5.1
NU202 E	15	5.1
NU2026	130	5.1
NU203 E	17	5.1
NU2032	160	5.1
NU2034	170	5.1
NU204 E	20	5.1
NU205 E	25	5.1
NU2056	280	5.1
NU206 E	30	5.1
NU2060	300	5.1
NU2064	320	5.1
NU207 E	35	5.1
NU2072	360	5.1
NU2076	380	5.1
NU208 E	40	5.1
NU2080	400	5.1
NU2084	420	5.1
NU2088	440	5.1
NU209 E	45	5.1
NU2092	460	5.1
NU2096	480	5.1
NU210 E	50	5.1
NU211 E	55	5.1
NU212 E	60	5.1
NU213 E	65	5.1
NU214 E	70	5.1
NU215 E	75	5.1
NU216 E	80	5.1
NU217 E	85	5.1
NU218 E	90	5.1
NU219 E	95	5.1
NU220 E	100	5.1
NU2203 E	17	5.1
NU2204 E	20	5.1
NU2205 E	25	5.1
NU2206 E	30	5.1
NU2207 E	35	5.1
NU2208 E	40	5.1
NU2209 E	45	5.1
NU221 E	105	5.1
NU2210 E	50	5.1
NU2211 E	55	5.1
NU2212 E	60	5.1
NU2213 E	65	5.1
NU2214 E	70	5.1
NU2215 E	75	5.1
NU2216 E	80	5.1
NU2217 E	85	5.1
NU2218 E	90	5.1
NU2219 E	95	5.1
NU222 E	110	5.1
NU2220 E	100	5.1
NU2222 E	110	5.1
NU2224 E	120	5.1
NU2226 E	130	5.1
NU2228 E	140	5.1
NU2230 E	150	5.1
NU2232 E	160	5.1
NU2234 E	170	5.1
NU2236 E	180	5.1
NU2238 E	190	5.1
NU224 E	120	5.1
NU2240 E	200	5.1
NU2244 E	220	5.1
NU2248 E	240	5.1
NU2252 E	260	5.1
NU2256 E	280	5.1
NU226 E	130	5.1
NU2260	300	5.1
NU2264	320	5.1
NU2268	340	5.1
NU2272	360	5.1
NU2276	380	5.1
NU228 E	140	5.1
NU2292	460	5.1
NU230 E	150	5.1
NU2304 E	20	5.1
NU2305 E	25	5.1
NU2306 E	30	5.1
NU2307 E	35	5.1
NU2308 E	40	5.1
NU2309 E	45	5.1
NU2310 E	50	5.1
NU2311 E	55	5.1
NU2312 E	60	5.1
NU2313 E	65	5.1
NU2314 E	70	5.1
NU2315 E	75	5.1
NU2316 E	80	5.1

Index	d [mm]	Tab.No
NU2317 E	85	5.1
NU2318 E	90	5.1
NU2319 E	95	5.1
NU232 E	160	5.1
NU2320 E	100	5.1
NU2322 E	110	5.1
NU2324 E	120	5.1
NU2326 E	130	5.1
NU2328 E	140	5.1
NU2330 E	150	5.1
NU2332 E	160	5.1
NU2334 E	170	5.1
NU2336 E	180	5.1
NU2338 E	190	5.1
NU234 E	170	5.1
NU2340 E	200	5.1
NU2344 E	220	5.1
NU2348 E	240	5.1
NU2352 E	260	5.1
NU2356 E	280	5.1
NU236 E	180	5.1
NU2360	300	5.1
NU2372	360	5.1
NU238 E	190	5.1
NU240 E	200	5.1
NU244 E	220	5.1
NU248 E	240	5.1
NU252 E	260	5.1
NU256 E	280	5.1
NU260 E	300	5.1
NU264 E	320	5.1
NU28/1000	1000	5.1
NU28/500	500	5.1
NU28/530	530	5.1
NU28/600	600	5.1
NU28/630	630	5.1
NU28/850	850	5.1
NU28/900	900	5.1
NU2840	200	5.1
NU2860	300	5.1
NU2864	320	5.1
NU2868	340	5.1
NU2888	440	5.1
NU2892	460	5.1
NU2896	480	5.1
NU29/1000	1000	5.1
NU29/1060	1060	5.1
NU29/1180	1180	5.1
NU29/1320	1320	5.1
NU29/500	500	5.1
NU29/530	530	5.1
NU29/560	560	5.1
NU29/600	600	5.1
NU29/630	630	5.1
NU29/710	710	5.1
NU29/900	900	5.1
NU29/950	950	5.1
NU2924	120	5.1
NU2926	130	5.1
NU2928	140	5.1
NU2932	160	5.1
NU2944	220	5.1
NU2952	260	5.1
NU2968	340	5.1
NU2972	360	5.1
NU2984	420	5.1
NU2988	440	5.1
NU2992	460	5.1
NU2996	480	5.1
NU30/1120	1120	5.1
NU30/500	500	5.1
NU30/530 E	530	5.1
NU30/600	600	5.1
NU30/630	630	5.1
NU30/670	670	5.1
NU3013	65	5.1
NU302 E	15	5.1
NU303 E	17	5.1
NU3030	150	5.1
NU3034	170	5.1
NU3036	180	5.1
NU3038	190	5.1
NU304 E	20	5.1
NU3040	200	5.1
NU3048	240	5.1
NU305 E	25	5.1
NU3052	260	5.1
NU306 E	30	5.1
NU3060	300	5.1
NU3064	320	5.1

Index	d [mm]	Tab.No
NU3068	340	5.1
NU307 E	35	5.1
NU3072	360	5.1
NU3076	380	5.1
NU308 E	40	5.1
NU3080	400	5.1
NU3084	420	5.1
NU309 E	45	5.1
NU3092	460	5.1
NU3096	480	5.1
NU31/500	500	5.1
NU31/530	530	5.1
NU31/560	560	5.1
NU310 E	50	5.1
NU311 E	55	5.1
NU312 E	60	5.1
NU313 E	65	5.1
NU3132	160	5.1
NU3138	190	5.1
NU314 E	70	5.1
NU3144	220	5.1
NU315 E	75	5.1
NU3152	260	5.1
NU3156	280	5.1
NU316 E	80	5.1
NU3160	300	5.1
NU3164	320	5.1
NU3168	340	5.1
NU317 E	85	5.1
NU3172	360	5.1
NU318 E	90	5.1
NU3184	420	5.1
NU3188	440	5.1
NU319 E	95	5.1
NU3192	460	5.1
NU3196	480	5.1
NU320 E	100	5.1
NU3206	30	5.1
NU3207	35	5.1
NU3208	40	5.1
NU3209	45	5.1
NU321 E	105	5.1
NU3210	50	5.1
NU3211	55	5.1
NU3212	60	5.1
NU3213	65	5.1
NU3214	70	5.1
NU3215	75	5.1
NU3216	80	5.1
NU3217	85	5.1
NU3218	90	5.1
NU3219	95	5.1
NU322 E	110	5.1
NU3220	100	5.1
NU3221	105	5.1
NU3222	110	5.1
NU3224	120	5.1
NU3226	130	5.1
NU3228	140	5.1
NU3230	150	5.1
NU3232	160	5.1
NU3234	170	5.1
NU3236	180	5.1
NU3238	190	5.1
NU324 E	120	5.1
NU3240	200	5.1
NU3244	220	5.1
NU3248	240	5.1
NU3252	260	5.1
NU326 E	130	5.1
NU328 E	140	5.1
NU330 E	150	5.1
NU3306	30	5.1
NU3307	35	5.1
NU3308	40	5.1
NU3309	45	5.1
NU3310	50	5.1
NU3311	55	5.1
NU3312	60	5.1
NU3313	65	5.1
NU3314	70	5.1
NU3315	75	5.1
NU3316	80	5.1
NU3317	85	5.1
NU3318	90	5.1
NU3319	95	5.1
NU332 E	160	5.1
NU3320	100	5.1
NU3321	105	5.1
NU3322	110	5.1

Index	d [mm]	Tab.No
NU3324	120	5.1
NU3326	130	5.1
NU3328	140	5.1
NU3330	150	5.1
NU3332	160	5.1
NU3334	170	5.1
NU3336	180	5.1
NU3338	190	5.1
NU334 E	170	5.1
NU3340	200	5.1
NU3344	220	5.1
NU3348	240	5.1
NU3352	260	5.1
NU336 E	180	5.1
NU338 E	190	5.1
NU340 E	200	5.1
NU344 E	220	5.1
NU348 E	240	5.1
NU352 E	260	5.1
NU356 E	280	5.1
NU364	320	5.1
NU38/500	500	5.1
NU38/950	950	5.1
NU3856	280	5.1
NU3860	300	5.1
NU3868	340	5.1
NU3876	380	5.1
NU3880	400	5.1
NU3884	420	5.1
NU39/1060	1060	5.1
NU39/500	500	5.1
NU3988	440	5.1
NU406	30	5.1
NU407	35	5.1
NU408	40	5.1
NU409	45	5.1
NU410	50	5.1
NU411	55	5.1
NU412	60	5.1
NU413	65	5.1
NU414	70	5.1
NU415	75	5.1
NU416	80	5.1
NU417	85	5.1
NU418	90	5.1
NU419	95	5.1
NU420	100	5.1
NU421	105	5.1
NU422	110	5.1
NU424	120	5.1
NU426	130	5.1
NU428	140	5.1
NU430	150	5.1
NU436	180	5.1
NU5208	40	5.1
NU5209	45	5.1
NU5210	50	5.1
NU5211	55	5.1
NU5212	60	5.1
NU5213	65	5.1
NU5214	70	5.1
NU5215	75	5.1
NU5216	80	5.1
NU5217	85	5.1
NU5218	90	5.1
NU5219	95	5.1
NU5220	100	5.1
NU5221	105	5.1
NU5222	110	5.1
NU5224	120	5.1
NU5226	130	5.1
NU5228	140	5.1
NU5230	150	5.1
NU5232	160	5.1
NU5234	170	5.1
NUB10/500	500	5.1
NUB10/530	530	5.1
NUB10/560	560	5.1
NUB10/600	600	5.1
NUB10/630	630	5.1
NUB10/670	670	5.1
NUB10/710	710	5.1
NUB10/750	750	5.1
NUB10/800	800	5.1
NUB1005	25	5.1
NUB1006	30	5.1
NUB1007	35	5.1
NUB1008	40	5.1
NUB1009	45	5.1
NUB1010	50	5.1

https://nppnovoteh.com

23. INDEX

Index	d [mm]	Tab.No
NUB1011	55	5.1
NUB1012	60	5.1
NUB1013	65	5.1
NUB1014	70	5.1
NUB1015	75	5.1
NUB1016	80	5.1
NUB1017	85	5.1
NUB1018	90	5.1
NUB1019	95	5.1
NUB1020	100	5.1
NUB1021	105	5.1
NUB1022	110	5.1
NUB1024	120	5.1
NUB1026	130	5.1
NUB1028	140	5.1
NUB1030	150	5.1
NUB1032	160	5.1
NUB1034	170	5.1
NUB1036	180	5.1
NUB1038	190	5.1
NUB1040	200	5.1
NUB1044	220	5.1
NUB1048	240	5.1
NUB1052	260	5.1
NUB1056	280	5.1
NUB1060	300	5.1
NUB1064	320	5.1
NUB1068	340	5.1
NUB1072	360	5.1
NUB1076	380	5.1
NUB1080	400	5.1
NUB1084	420	5.1
NUB1088	440	5.1
NUB1092	460	5.1
NUB1096	480	5.1
NUB12/500	500	5.1
NUB12/560	560	5.1
NUB12/630	630	5.1
NUB1292	460	5.1
NUB18/1000	1000	5.1
NUB18/1120	1120	5.1
NUB18/1180	1180	5.1
NUB18/1320	1320	5.1
NUB18/1600	1600	5.1
NUB18/1700	1700	5.1
NUB18/500	500	5.1
NUB18/560	560	5.1
NUB18/600	600	5.1
NUB18/630	630	5.1
NUB18/670	670	5.1
NUB18/710	710	5.1
NUB18/750	750	5.1
NUB18/800	800	5.1
NUB18/900	900	5.1
NUB1864	320	5.1
NUB1872	360	5.1
NUB1876	380	5.1
NUB1880	400	5.1
NUB1884	420	5.1
NUB1896	480	5.1
NUB19/500	500	5.1
NUB19/530	530	5.1
NUB19/560	560	5.1
NUB19/600	600	5.1
NUB19/630	630	5.1
NUB19/670	670	5.1
NUB19/710	710	5.1
NUB19/850	850	5.1
NUB19/900	900	5.1
NUB1920	100	5.1
NUB1921	105	5.1
NUB1926	130	5.1
NUB1928	140	5.1
NUB1932	160	5.1
NUB1938	190	5.1
NUB1940	200	5.1
NUB1944	220	5.1
NUB1952	260	5.1
NUB1956	280	5.1
NUB1960	300	5.1
NUB1964	320	5.1
NUB1968	340	5.1
NUB1972	360	5.1
NUB1980	400	5.1
NUB1984	420	5.1
NUB1988	440	5.1
NUB1992	460	5.1
NUB1996	480	5.1
NUB2/600	600	5.1
NUB20/500	500	5.1
NUB20/530	530	5.1
NUB20/560	560	5.1
NUB20/600	600	5.1
NUB20/630	630	5.1
NUB20/670	670	5.1
NUB20/710	710	5.1
NUB20/750	750	5.1
NUB20/800	800	5.1
NUB2009	45	5.1
NUB202 E	15	5.1
NUB2026	130	5.1
NUB203 E	17	5.1
NUB2032	160	5.1
NUB2034	170	5.1
NUB204 E	20	5.1
NUB205 E	25	5.1
NUB2056	280	5.1
NUB206 E	30	5.1
NUB2060	300	5.1
NUB2064	320	5.1
NUB207 E	35	5.1
NUB2072	360	5.1
NUB2076	380	5.1
NUB208 E	40	5.1
NUB2080	400	5.1
NUB2084	420	5.1
NUB2088	440	5.1
NUB209 E	45	5.1
NUB2092	460	5.1
NUB2096	480	5.1
NUB210 E	50	5.1
NUB211 E	55	5.1
NUB212 E	60	5.1
NUB213 E	65	5.1
NUB214 E	70	5.1
NUB215 E	75	5.1
NUB216 E	80	5.1
NUB217 E	85	5.1
NUB218 E	90	5.1
NUB219 E	95	5.1
NUB220 E	100	5.1
NUB2203 E	17	5.1
NUB2204 E	20	5.1
NUB2205 E	25	5.1
NUB2206 E	30	5.1
NUB2207 E	35	5.1
NUB2208 E	40	5.1
NUB2209 E	45	5.1
NUB221 E	105	5.1
NUB2210 E	50	5.1
NUB2211 E	55	5.1
NUB2212 E	60	5.1
NUB2213 E	65	5.1
NUB2214 E	70	5.1
NUB2215 E	75	5.1
NUB2216 E	80	5.1
NUB2217 E	85	5.1
NUB2218 E	90	5.1
NUB2219 E	95	5.1
NUB222 E	110	5.1
NUB2220 E	100	5.1
NUB2222 E	110	5.1
NUB2224 E	120	5.1
NUB2226 E	130	5.1
NUB2228 E	140	5.1
NUB2230 E	150	5.1
NUB2232 E	160	5.1
NUB2234 E	170	5.1
NUB2236 E	180	5.1
NUB2238 E	190	5.1
NUB224 E	120	5.1
NUB2240 E	200	5.1
NUB2244 E	220	5.1
NUB2248 E	240	5.1
NUB2252 E	260	5.1
NUB2256 E	280	5.1
NUB226 E	130	5.1
NUB2260	300	5.1
NUB2264	320	5.1
NUB2268	340	5.1
NUB2272	360	5.1
NUB2276	380	5.1
NUB228 E	140	5.1
NUB2292	460	5.1
NUB230 E	150	5.1
NUB2304 E	20	5.1
NUB2305 E	25	5.1
NUB2306 E	30	5.1
NUB2307 E	35	5.1
NUB2308 E	40	5.1
NUB2309 E	45	5.1
NUB2310 E	50	5.1
NUB2311 E	55	5.1
NUB2312 E	60	5.1
NUB2313 E	65	5.1
NUB2314 E	70	5.1
NUB2315 E	75	5.1
NUB2316 E	80	5.1
NUB2317 E	85	5.1
NUB2318 E	90	5.1
NUB2319 E	95	5.1
NUB232 E	160	5.1
NUB2320 E	100	5.1
NUB2322 E	110	5.1
NUB2324 E	120	5.1
NUB2326 E	130	5.1
NUB2328 E	140	5.1
NUB2330 E	150	5.1
NUB2332 E	160	5.1
NUB2334 E	170	5.1
NUB2336 E	180	5.1
NUB2338 E	190	5.1
NUB234 E	170	5.1
NUB2340 E	200	5.1
NUB2344 E	220	5.1
NUB2348 E	240	5.1
NUB2352 E	260	5.1
NUB2356 E	280	5.1
NUB236 E	180	5.1
NUB2360	300	5.1
NUB2372	360	5.1
NUB238 E	190	5.1
NUB240 E	200	5.1
NUB244 E	220	5.1
NUB248 E	240	5.1
NUB252 E	260	5.1
NUB256 E	280	5.1
NUB260 E	300	5.1
NUB264 E	320	5.1
NUB28/1000	1000	5.1
NUB28/500	500	5.1
NUB28/530	530	5.1
NUB28/600	600	5.1
NUB28/630	630	5.1
NUB28/850	850	5.1
NUB28/900	900	5.1
NUB2840	200	5.1
NUB2860	300	5.1
NUB2864	320	5.1
NUB2868	340	5.1
NUB2888	440	5.1
NUB2892	460	5.1
NUB2896	480	5.1
NUB29/1000	1000	5.1
NUB29/1060	1060	5.1
NUB29/1180	1180	5.1
NUB29/1320	1320	5.1
NUB29/500	500	5.1
NUB29/530	530	5.1
NUB29/560	560	5.1
NUB29/600	600	5.1
NUB29/630	630	5.1
NUB29/710	710	5.1
NUB29/900	900	5.1
NUB29/950	950	5.1
NUB2924	120	5.1
NUB2926	130	5.1
NUB2928	140	5.1
NUB2932	160	5.1
NUB2944	220	5.1
NUB2952	260	5.1
NUB2968	340	5.1
NUB2972	360	5.1
NUB2984	420	5.1
NUB2988	440	5.1
NUB2992	460	5.1
NUB2996	480	5.1
NUB30/1120	1120	5.1
NUB30/500	500	5.1
NUB30/530 E	530	5.1
NUB30/600	600	5.1
NUB30/630	630	5.1
NUB30/670	670	5.1
NUB3013	65	5.1
NUB302 E	15	5.1
NUB303 E	17	5.1
NUB3030	150	5.1
NUB3034	170	5.1
NUB3036	180	5.1
NUB3038	190	5.1
NUB304 E	20	5.1
NUB3040	200	5.1
NUB3048	240	5.1
NUB305 E	25	5.1
NUB3052	260	5.1
NUB306 E	30	5.1
NUB3060	300	5.1
NUB3064	320	5.1
NUB3068	340	5.1
NUB307 E	35	5.1
NUB3072	360	5.1
NUB3076	380	5.1
NUB308 E	40	5.1
NUB3080	400	5.1
NUB3084	420	5.1
NUB309 E	45	5.1
NUB3092	460	5.1
NUB3096	480	5.1
NUB31/500	500	5.1
NUB31/530	530	5.1
NUB31/560	560	5.1
NUB310 E	50	5.1
NUB311 E	55	5.1
NUB312 E	60	5.1
NUB313 E	65	5.1
NUB3132	160	5.1
NUB3138	190	5.1
NUB314 E	70	5.1
NUB3144	220	5.1
NUB315 E	75	5.1
NUB3152	260	5.1
NUB3156	280	5.1
NUB316 E	80	5.1
NUB3160	300	5.1
NUB3164	320	5.1
NUB3168	340	5.1
NUB317 E	85	5.1
NUB3172	360	5.1
NUB318 E	90	5.1
NUB3184	420	5.1
NUB3188	440	5.1
NUB319 E	95	5.1
NUB3192	460	5.1
NUB3196	480	5.1
NUB320 E	100	5.1
NUB3206	30	5.1
NUB3207	35	5.1
NUB3208	40	5.1
NUB3209	45	5.1
NUB321 E	105	5.1
NUB3210	50	5.1
NUB3211	55	5.1
NUB3212	60	5.1
NUB3213	65	5.1
NUB3214	70	5.1
NUB3215	75	5.1
NUB3216	80	5.1
NUB3217	85	5.1
NUB3218	90	5.1
NUB3219	95	5.1
NUB322 E	110	5.1
NUB3220	100	5.1
NUB3221	105	5.1
NUB3222	110	5.1
NUB3224	120	5.1
NUB3226	130	5.1
NUB3228	140	5.1
NUB3230	150	5.1
NUB3232	160	5.1
NUB3234	170	5.1
NUB3236	180	5.1
NUB3238	190	5.1
NUB324 E	120	5.1
NUB3240	200	5.1
NUB3244	220	5.1
NUB3248	240	5.1
NUB3252	260	5.1
NUB326 E	130	5.1
NUB328 E	140	5.1
NUB330 E	150	5.1
NUB3306	30	5.1
NUB3307	35	5.1
NUB3308	40	5.1
NUB3309	45	5.1
NUB3310	50	5.1
NUB3311	55	5.1
NUB3312	60	5.1
NUB3313	65	5.1
NUB3314	70	5.1
NUB3315	75	5.1
NUB3316	80	5.1
NUB3317	85	5.1
NUB3318	90	5.1
NUB3319	95	5.1
NUB332 E	160	5.1
NUB3320	100	5.1
NUB3321	105	5.1
NUB3322	110	5.1
NUB3324	120	5.1
NUB3326	130	5.1
NUB3328	140	5.1
NUB3330	150	5.1
NUB3332	160	5.1
NUB3334	170	5.1
NUB3336	180	5.1
NUB3338	190	5.1
NUB334 E	170	5.1
NUB3340	200	5.1
NUB3344	220	5.1
NUB3348	240	5.1
NUB3352	260	5.1
NUB336 E	180	5.1
NUB338 E	190	5.1
NUB340 E	200	5.1
NUB344 E	220	5.1
NUB348 E	240	5.1
NUB352 E	260	5.1
NUB356 E	280	5.1
NUB364	320	5.1
NUB38/500	500	5.1
NUB38/950	950	5.1
NUB3856	280	5.1
NUB3860	300	5.1
NUB3868	340	5.1
NUB3876	380	5.1
NUB3880	400	5.1
NUB3884	420	5.1
NUB39/1060	1060	5.1
NUB39/500	500	5.1
NUB3988	440	5.1
NUB406	30	5.1
NUB407	35	5.1
NUB408	40	5.1
NUB409	45	5.1
NUB410	50	5.1
NUB411	55	5.1
NUB412	60	5.1
NUB413	65	5.1
NUB414	70	5.1
NUB415	75	5.1
NUB416	80	5.1
NUB417	85	5.1
NUB418	90	5.1
NUB419	95	5.1
NUB420	100	5.1
NUB421	105	5.1
NUB422	110	5.1
NUB424	120	5.1
NUB426	130	5.1
NUB428	140	5.1
NUB430	150	5.1
NUB436	180	5.1
NUB5208	40	5.1
NUB5209	45	5.1
NUB5210	50	5.1
NUB5211	55	5.1
NUB5212	60	5.1
NUB5213	65	5.1
NUB5214	70	5.1
NUB5215	75	5.1
NUB5216	80	5.1
NUB5217	85	5.1
NUB5218	90	5.1
NUB5219	95	5.1
NUB5220	100	5.1
NUB5221	105	5.1
NUB5222	110	5.1
NUB5224	120	5.1
NUB5226	130	5.1
NUB5228	140	5.1
NUB5230	150	5.1
NUB5232	160	5.1
NUB5234	170	5.1
NUC10/500	500	5.1
NUC10/530	530	5.1
NUC10/560	560	5.1
NUC10/600	600	5.1
NUC10/630	630	5.1
NUC10/670	670	5.1
NUC10/710	710	5.1

https://nppnovoteh.com

Index	d [mm]	Tab.No
NUC10/750	750	5.1
NUC10/800	800	5.1
NUC1005	25	5.1
NUC1006	30	5.1
NUC1007	35	5.1
NUC1008	40	5.1
NUC1009	45	5.1
NUC1010	50	5.1
NUC1011	55	5.1
NUC1012	60	5.1
NUC1013	65	5.1
NUC1014	70	5.1
NUC1015	75	5.1
NUC1016	80	5.1
NUC1017	85	5.1
NUC1018	90	5.1
NUC1019	95	5.1
NUC1020	100	5.1
NUC1021	105	5.1
NUC1022	110	5.1
NUC1024	120	5.1
NUC1026	130	5.1
NUC1028	140	5.1
NUC1030	150	5.1
NUC1032	160	5.1
NUC1034	170	5.1
NUC1036	180	5.1
NUC1038	190	5.1
NUC1040	200	5.1
NUC1044	220	5.1
NUC1048	240	5.1
NUC1052	260	5.1
NUC1056	280	5.1
NUC1060	300	5.1
NUC1064	320	5.1
NUC1068	340	5.1
NUC1072	360	5.1
NUC1076	380	5.1
NUC1080	400	5.1
NUC1084	420	5.1
NUC1088	440	5.1
NUC1092	460	5.1
NUC1096	480	5.1
NUC12/500	500	5.1
NUC12/560	560	5.1
NUC12/630	630	5.1
NUC1292	460	5.1
NUC18/1000	1000	5.1
NUC18/1120	1120	5.1
NUC18/1180	1180	5.1
NUC18/1320	1320	5.1
NUC18/1600	1600	5.1
NUC18/1700	1700	5.1
NUC18/500	500	5.1
NUC18/560	560	5.1
NUC18/600	600	5.1
NUC18/630	630	5.1
NUC18/670	670	5.1
NUC18/710	710	5.1
NUC18/750	750	5.1
NUC18/800	800	5.1
NUC18/900	900	5.1
NUC1864	320	5.1
NUC1872	360	5.1
NUC1876	380	5.1
NUC1880	400	5.1
NUC1884	420	5.1
NUC1896	480	5.1
NUC19/500	500	5.1
NUC19/530	530	5.1
NUC19/560	560	5.1
NUC19/600	600	5.1
NUC19/630	630	5.1
NUC19/670	670	5.1
NUC19/710	710	5.1
NUC19/850	850	5.1
NUC19/900	900	5.1
NUC1920	100	5.1
NUC1921	105	5.1
NUC1926	130	5.1
NUC1928	140	5.1
NUC1932	160	5.1
NUC1938	190	5.1
NUC1940	200	5.1
NUC1944	220	5.1
NUC1952	260	5.1
NUC1956	280	5.1
NUC1960	300	5.1
NUC1964	320	5.1
NUC1968	340	5.1

Index	d [mm]	Tab.No
NUC1972	360	5.1
NUC1980	400	5.1
NUC1984	420	5.1
NUC1988	440	5.1
NUC1992	460	5.1
NUC1996	480	5.1
NUC2/600	600	5.1
NUC20/500	500	5.1
NUC20/530	530	5.1
NUC20/560	560	5.1
NUC20/600	600	5.1
NUC20/630	630	5.1
NUC20/670	670	5.1
NUC20/710	710	5.1
NUC20/750	750	5.1
NUC20/800	800	5.1
NUC2009	45	5.1
NUC202 E	15	5.1
NUC2026	130	5.1
NUC203 E	17	5.1
NUC2032	160	5.1
NUC2034	170	5.1
NUC204 E	20	5.1
NUC205 E	25	5.1
NUC2056	280	5.1
NUC206 E	30	5.1
NUC2060	300	5.1
NUC2064	320	5.1
NUC207 E	35	5.1
NUC2072	360	5.1
NUC2076	380	5.1
NUC208 E	40	5.1
NUC2080	400	5.1
NUC2084	420	5.1
NUC2088	440	5.1
NUC209 E	45	5.1
NUC2092	460	5.1
NUC2096	480	5.1
NUC210 E	50	5.1
NUC211 E	55	5.1
NUC212 E	60	5.1
NUC213 E	65	5.1
NUC214 E	70	5.1
NUC215 E	75	5.1
NUC216 E	80	5.1
NUC217 E	85	5.1
NUC218 E	90	5.1
NUC219 E	95	5.1
NUC220 E	100	5.1
NUC2203 E	17	5.1
NUC2204 E	20	5.1
NUC2205 E	25	5.1
NUC2206 E	30	5.1
NUC2207 E	35	5.1
NUC2208 E	40	5.1
NUC2209 E	45	5.1
NUC221 E	105	5.1
NUC2210 E	50	5.1
NUC2211 E	55	5.1
NUC2212 E	60	5.1
NUC2213 E	65	5.1
NUC2214 E	70	5.1
NUC2215 E	75	5.1
NUC2216 E	80	5.1
NUC2217 E	85	5.1
NUC2218 E	90	5.1
NUC2219 E	95	5.1
NUC222 E	110	5.1
NUC2220 E	100	5.1
NUC2222 E	110	5.1
NUC2224 E	120	5.1
NUC2226 E	130	5.1
NUC2228 E	140	5.1
NUC2230 E	150	5.1
NUC2232 E	160	5.1
NUC2234 E	170	5.1
NUC2236 E	180	5.1
NUC2238 E	190	5.1
NUC224 E	120	5.1
NUC2240 E	200	5.1
NUC2244 E	220	5.1
NUC2248 E	240	5.1
NUC2252 E	260	5.1
NUC2256 E	280	5.1
NUC226 E	130	5.1
NUC2260	300	5.1
NUC2264	320	5.1
NUC2268	340	5.1
NUC2272	360	5.1
NUC2276	380	5.1

Index	d [mm]	Tab.No
NUC228 E	140	5.1
NUC2292	460	5.1
NUC230 E	150	5.1
NUC2304 E	20	5.1
NUC2305 E	25	5.1
NUC2306 E	30	5.1
NUC2307 E	35	5.1
NUC2308 E	40	5.1
NUC2309 E	45	5.1
NUC2310 E	50	5.1
NUC2311 E	55	5.1
NUC2312 E	60	5.1
NUC2313 E	65	5.1
NUC2314 E	70	5.1
NUC2315 E	75	5.1
NUC2316 E	80	5.1
NUC2317 E	85	5.1
NUC2318 E	90	5.1
NUC2319 E	95	5.1
NUC232 E	160	5.1
NUC2320 E	100	5.1
NUC2322 E	110	5.1
NUC2324 E	120	5.1
NUC2326 E	130	5.1
NUC2328 E	140	5.1
NUC2330 E	150	5.1
NUC2332 E	160	5.1
NUC2334 E	170	5.1
NUC2336 E	180	5.1
NUC2338 E	190	5.1
NUC234 E	170	5.1
NUC2340 E	200	5.1
NUC2344 E	220	5.1
NUC2348 E	240	5.1
NUC2352 E	260	5.1
NUC2356 E	280	5.1
NUC236 E	180	5.1
NUC2360	300	5.1
NUC2372	360	5.1
NUC238 E	190	5.1
NUC240 E	200	5.1
NUC244 E	220	5.1
NUC248 E	240	5.1
NUC252 E	260	5.1
NUC256 E	280	5.1
NUC260 E	300	5.1
NUC264 E	320	5.1
NUC28/1000	1000	5.1
NUC28/500	500	5.1
NUC28/530	530	5.1
NUC28/600	600	5.1
NUC28/630	630	5.1
NUC28/850	850	5.1
NUC28/900	900	5.1
NUC2840	200	5.1
NUC2860	300	5.1
NUC2864	320	5.1
NUC2868	340	5.1
NUC2888	440	5.1
NUC2892	460	5.1
NUC2896	480	5.1
NUC29/1000	1000	5.1
NUC29/1060	1060	5.1
NUC29/1180	1180	5.1
NUC29/1320	1320	5.1
NUC29/500	500	5.1
NUC29/530	530	5.1
NUC29/560	560	5.1
NUC29/600	600	5.1
NUC29/630	630	5.1
NUC29/710	710	5.1
NUC29/900	900	5.1
NUC29/950	950	5.1
NUC2924	120	5.1
NUC2926	130	5.1
NUC2928	140	5.1
NUC2932	160	5.1
NUC2944	220	5.1
NUC2952	260	5.1
NUC2968	340	5.1
NUC2972	360	5.1
NUC2984	420	5.1
NUC2988	440	5.1
NUC2992	460	5.1
NUC2996	480	5.1
NUC30/1120	1120	5.1
NUC30/500	500	5.1
NUC30/530 E	530	5.1
NUC30/600	600	5.1
NUC30/630	630	5.1

Index	d [mm]	Tab.No
NUC30/670	670	5.1
NUC3013	65	5.1
NUC302 E	15	5.1
NUC303 E	17	5.1
NUC3030	150	5.1
NUC3034	170	5.1
NUC3036	180	5.1
NUC3038	190	5.1
NUC304 E	20	5.1
NUC3040	200	5.1
NUC3048	240	5.1
NUC305 E	25	5.1
NUC3052	260	5.1
NUC306 E	30	5.1
NUC3060	300	5.1
NUC3064	320	5.1
NUC3068	340	5.1
NUC307 E	35	5.1
NUC3072	360	5.1
NUC3076	380	5.1
NUC308 E	40	5.1
NUC3080	400	5.1
NUC3084	420	5.1
NUC309 E	45	5.1
NUC3092	460	5.1
NUC3096	480	5.1
NUC31/500	500	5.1
NUC31/530	530	5.1
NUC31/560	560	5.1
NUC310 E	50	5.1
NUC311 E	55	5.1
NUC312 E	60	5.1
NUC313 E	65	5.1
NUC3132	160	5.1
NUC3138	190	5.1
NUC314 E	70	5.1
NUC3144	220	5.1
NUC315 E	75	5.1
NUC3152	260	5.1
NUC3156	280	5.1
NUC316 E	80	5.1
NUC3160	300	5.1
NUC3164	320	5.1
NUC3168	340	5.1
NUC317 E	85	5.1
NUC3172	360	5.1
NUC318 E	90	5.1
NUC3184	420	5.1
NUC3188	440	5.1
NUC319 E	95	5.1
NUC3192	460	5.1
NUC3196	480	5.1
NUC320 E	100	5.1
NUC3206	30	5.1
NUC3207	35	5.1
NUC3208	40	5.1
NUC3209	45	5.1
NUC321 E	105	5.1
NUC3210	50	5.1
NUC3211	55	5.1
NUC3212	60	5.1
NUC3213	65	5.1
NUC3214	70	5.1
NUC3215	75	5.1
NUC3216	80	5.1
NUC3217	85	5.1
NUC3218	90	5.1
NUC3219	95	5.1
NUC322 E	110	5.1
NUC3220	100	5.1
NUC3221	105	5.1
NUC3222	110	5.1
NUC3224	120	5.1
NUC3226	130	5.1
NUC3228	140	5.1
NUC3230	150	5.1
NUC3232	160	5.1
NUC3234	170	5.1
NUC3236	180	5.1
NUC3238	190	5.1
NUC324 E	120	5.1
NUC3240	200	5.1
NUC3244	220	5.1
NUC3248	240	5.1
NUC3252	260	5.1
NUC326 E	130	5.1
NUC328 E	140	5.1
NUC330 E	150	5.1
NUC3306	30	5.1
NUC3307	35	5.1

Index	d [mm]	Tab.No
NUC3308	40	5.1
NUC3309	45	5.1
NUC3310	50	5.1
NUC3311	55	5.1
NUC3312	60	5.1
NUC3313	65	5.1
NUC3314	70	5.1
NUC3315	75	5.1
NUC3316	80	5.1
NUC3317	85	5.1
NUC3318	90	5.1
NUC3319	95	5.1
NUC332 E	160	5.1
NUC3320	100	5.1
NUC3321	105	5.1
NUC3322	110	5.1
NUC3324	120	5.1
NUC3326	130	5.1
NUC3328	140	5.1
NUC3330	150	5.1
NUC3332	160	5.1
NUC3334	170	5.1
NUC3336	180	5.1
NUC3338	190	5.1
NUC334 E	170	5.1
NUC3340	200	5.1
NUC3344	220	5.1
NUC3348	240	5.1
NUC3352	260	5.1
NUC336 E	180	5.1
NUC338 E	190	5.1
NUC340 E	200	5.1
NUC344 E	220	5.1
NUC348 E	240	5.1
NUC352 E	260	5.1
NUC356 E	280	5.1
NUC364	320	5.1
NUC38/500	500	5.1
NUC38/950	950	5.1
NUC3856	280	5.1
NUC3860	300	5.1
NUC3868	340	5.1
NUC3876	380	5.1
NUC3880	400	5.1
NUC3884	420	5.1
NUC39/1060	1060	5.1
NUC39/500	500	5.1
NUC3988	440	5.1
NUC406	30	5.1
NUC407	35	5.1
NUC408	40	5.1
NUC409	45	5.1
NUC410	50	5.1
NUC411	55	5.1
NUC412	60	5.1
NUC413	65	5.1
NUC414	70	5.1
NUC415	75	5.1
NUC416	80	5.1
NUC417	85	5.1
NUC418	90	5.1
NUC419	95	5.1
NUC420	100	5.1
NUC421	105	5.1
NUC422	110	5.1
NUC424	120	5.1
NUC426	130	5.1
NUC428	140	5.1
NUC430	150	5.1
NUC436	180	5.1
NUC5208	40	5.1
NUC5209	45	5.1
NUC5210	50	5.1
NUC5211	55	5.1
NUC5212	60	5.1
NUC5213	65	5.1
NUC5214	70	5.1
NUC5215	75	5.1
NUC5216	80	5.1
NUC5217	85	5.1
NUC5218	90	5.1
NUC5219	95	5.1
NUC5220	100	5.1
NUC5221	105	5.1
NUC5222	110	5.1
NUC5224	120	5.1
NUC5226	130	5.1
NUC5228	140	5.1
NUC5230	150	5.1
NUC5232	160	5.1

https://nppnovoteh.com

23. INDEX

Index	d [mm]	Tab.No
NUC5234	170	5.1
NUJ10/500	500	5.3
NUJ1034	170	5.3
NUJ1036	180	5.3
NUJ1038	190	5.3
NUJ1040	200	5.3
NUJ1044	220	5.3
NUJ1048	240	5.3
NUJ1052	260	5.3
NUJ1056	280	5.3
NUJ1060	300	5.3
NUJ1064	320	5.3
NUJ1068	340	5.3
NUJ1072	360	5.3
NUJ1076	380	5.3
NUJ1080	400	5.3
NUJ1084	420	5.3
NUJ1088	440	5.3
NUJ1092	460	5.3
NUJ1096	480	5.3
NUJ202 E	15	5.3
NUJ203 E	17	5.3
NUJ204 E	20	5.3
NUJ205 E	25	5.3
NUJ206 E	30	5.3
NUJ207 E	35	5.3
NUJ208 E	40	5.3
NUJ209 E	45	5.3
NUJ210 E	50	5.3
NUJ211 E	55	5.3
NUJ212 E	60	5.3
NUJ213 E	65	5.3
NUJ214 E	70	5.3
NUJ215 E	75	5.3
NUJ216 E	80	5.3
NUJ217 E	85	5.3
NUJ218 E	90	5.3
NUJ219 E	95	5.3
NUJ220 E	100	5.3
NUJ2203 E	17	5.3
NUJ2204 E	20	5.3
NUJ2205 E	25	5.3
NUJ2206 E	30	5.3
NUJ2207 E	35	5.3
NUJ2208 E	40	5.3
NUJ2209 E	45	5.3
NUJ221 E	105	5.3
NUJ2210 E	50	5.3
NUJ2211 E	55	5.3
NUJ2212 E	60	5.3
NUJ2213 E	65	5.3
NUJ2214 E	70	5.3
NUJ2215 E	75	5.3
NUJ2216 E	80	5.3
NUJ2217 E	85	5.3
NUJ2218 E	90	5.3
NUJ2219 E	95	5.3
NUJ222 E	110	5.3
NUJ2220 E	100	5.3
NUJ2222 E	110	5.3
NUJ2224 E	120	5.3
NUJ2226 E	130	5.3
NUJ2228 E	140	5.3
NUJ2230 E	150	5.3
NUJ2232 E	160	5.3
NUJ2234 E	170	5.3
NUJ2236 E	180	5.3
NUJ2238 E	190	5.3
NUJ224 E	120	5.3
NUJ2240 E	200	5.3
NUJ2244 E	220	5.3
NUJ2248	240	5.3
NUJ2252	260	5.3
NUJ2256 E	280	5.3
NUJ226 E	130	5.3
NUJ2260	300	5.3
NUJ2264	320	5.3
NUJ228 E	140	5.3
NUJ230 E	150	5.3
NUJ2304 E	20	5.3
NUJ2305 E	25	5.3
NUJ2306 E	30	5.3
NUJ2307 E	35	5.3
NUJ2308 E	40	5.3
NUJ2309 E	45	5.3
NUJ2310 E	50	5.3
NUJ2311 E	55	5.3
NUJ2312 E	60	5.3
NUJ2313 E	65	5.3
NUJ2314 E	70	5.3

Index	d [mm]	Tab.No
NUJ2315 E	75	5.3
NUJ2316 E	80	5.3
NUJ2317 E	85	5.3
NUJ2318 E	90	5.3
NUJ2319 E	95	5.3
NUJ232 E	160	5.3
NUJ2320 E	100	5.3
NUJ2322 E	110	5.3
NUJ2324 E	120	5.3
NUJ2326 E	130	5.3
NUJ2328 E	140	5.3
NUJ2330 E	150	5.3
NUJ2332 E	160	5.3
NUJ2334	170	5.3
NUJ2336	180	5.3
NUJ2338 E	190	5.3
NUJ234 E	170	5.3
NUJ2340 E	200	5.3
NUJ2344 E	220	5.3
NUJ2348	240	5.3
NUJ2356	280	5.3
NUJ236 E	180	5.3
NUJ238 E	190	5.3
NUJ240 E	200	5.3
NUJ244 E	220	5.3
NUJ248 E	240	5.3
NUJ252 E	260	5.3
NUJ256	280	5.3
NUJ260	300	5.3
NUJ264	320	5.3
NUJ302 E	15	5.3
NUJ303 E	17	5.3
NUJ304 E	20	5.3
NUJ305 E	25	5.3
NUJ306 E	30	5.3
NUJ307 E	35	5.3
NUJ308 E	40	5.3
NUJ309 E	45	5.3
NUJ310 E	50	5.3
NUJ311 E	55	5.3
NUJ312 E	60	5.3
NUJ313 E	65	5.3
NUJ314 E	70	5.3
NUJ315 E	75	5.3
NUJ316 E	80	5.3
NUJ317 E	85	5.3
NUJ318 E	90	5.3
NUJ319 E	95	5.3
NUJ320 E	100	5.3
NUJ321 E	105	5.3
NUJ322 E	110	5.3
NUJ324 E	120	5.3
NUJ326 E	130	5.3
NUJ328 E	140	5.3
NUJ330 E	150	5.3
NUJ332 E	160	5.3
NUJ334 E	170	5.3
NUJ336 E	180	5.3
NUJ338 E	190	5.3
NUJ340 E	200	5.3
NUJ344	220	5.3
NUJ348 E	240	5.3
NUJ352	260	5.3
NUJ356 E	280	5.3
NUJ406	30	5.3
NUJ407	35	5.3
NUJ408	40	5.3
NUJ409	45	5.3
NUJ410	50	5.3
NUJ411	55	5.3
NUJ412	60	5.3
NUJ413	65	5.3
NUJ414	70	5.3
NUJ415	75	5.3
NUJ416	80	5.3
NUJ417	85	5.3
NUJ418	90	5.3
NUJ419	95	5.3
NUJ420	100	5.3
NUJ421	105	5.3
NUJ422	110	5.3
NUJ424	120	5.3
NUJ426	130	5.3
NUJ428	140	5.3
NUJ430	150	5.3
NUKR35	35	13.4
NUKR40	40	13.4
NUKR47	47	13.4
NUKR52	52	13.4
NUKR62	62	13.4

Index	d [mm]	Tab.No
NUKR72	72	13.4
NUKR80	80	13.4
NUKR90	90	13.4
NUP10/500	500	5.5
NUP10/530	530	5.5
NUP10/560	560	5.5
NUP10/600	600	5.5
NUP10/630	630	5.5
NUP10/670	670	5.5
NUP10/710	710	5.5
NUP10/750	750	5.5
NUP10/800	800	5.5
NUP1005	25	5.5
NUP1006	30	5.5
NUP1007	35	5.5
NUP1008	40	5.5
NUP1009	45	5.5
NUP1010	50	5.5
NUP1011	55	5.5
NUP1012	60	5.5
NUP1013	65	5.5
NUP1014	70	5.5
NUP1015	75	5.5
NUP1016	80	5.5
NUP1017	85	5.5
NUP1018	90	5.5
NUP1019	95	5.5
NUP1020	100	5.5
NUP1021	105	5.5
NUP1022	110	5.5
NUP1024	120	5.5
NUP1026	130	5.5
NUP1028	140	5.5
NUP1030	150	5.5
NUP1032	160	5.5
NUP1034	170	5.5
NUP1036	180	5.5
NUP1038	190	5.5
NUP1040	200	5.5
NUP1044	220	5.5
NUP1048	240	5.5
NUP1052	260	5.5
NUP1056	280	5.5
NUP1060	300	5.5
NUP1064	320	5.5
NUP1068	340	5.5
NUP1072	360	5.5
NUP1076	380	5.5
NUP1080	400	5.5
NUP1084	420	5.5
NUP1088	440	5.5
NUP1092	460	5.5
NUP1096	480	5.5
NUP12/500	500	5.5
NUP12/560	560	5.5
NUP12/630	630	5.5
NUP1292	460	5.5
NUP18/1000	1000	5.5
NUP18/1120	1120	5.5
NUP18/1180	1180	5.5
NUP18/1320	1320	5.5
NUP18/1600	1600	5.5
NUP18/1700	1700	5.5
NUP18/500	500	5.5
NUP18/560	560	5.5
NUP18/600	600	5.5
NUP18/630	630	5.5
NUP18/670	670	5.5
NUP18/710	710	5.5
NUP18/750	750	5.5
NUP18/800	800	5.5
NUP18/900	900	5.5
NUP1864	320	5.5
NUP1872	360	5.5
NUP1876	380	5.5
NUP1880	400	5.5
NUP1884	420	5.5
NUP1896	480	5.5
NUP19/500	500	5.5
NUP19/530	530	5.5
NUP19/560	560	5.5
NUP19/600	600	5.5
NUP19/630	630	5.5
NUP19/670	670	5.5
NUP19/710	710	5.5
NUP19/850	850	5.5
NUP19/900	900	5.5
NUP1920	100	5.5
NUP1921	105	5.5
NUP1926	130	5.5

Index	d [mm]	Tab.No
NUP1928	140	5.5
NUP1932	160	5.5
NUP1938	190	5.5
NUP1940	200	5.5
NUP1944	220	5.5
NUP1952	260	5.5
NUP1956	280	5.5
NUP1960	300	5.5
NUP1964	320	5.5
NUP1968	340	5.5
NUP1972	360	5.5
NUP1980	400	5.5
NUP1984	420	5.5
NUP1988	440	5.5
NUP1992	460	5.5
NUP1996	480	5.5
NUP2/600	600	5.5
NUP20/500	500	5.5
NUP20/530	530	5.5
NUP20/560	560	5.5
NUP20/600	600	5.5
NUP20/630	630	5.5
NUP20/670	670	5.5
NUP20/710	710	5.5
NUP20/750	750	5.5
NUP20/800	800	5.5
NUP2009	45	5.5
NUP202 E	15	5.5
NUP2026	130	5.5
NUP203 E	17	5.5
NUP2032	160	5.5
NUP2034	170	5.5
NUP204 E	20	5.5
NUP205 E	25	5.5
NUP2056	280	5.5
NUP206 E	30	5.5
NUP2060	300	5.5
NUP2064	320	5.5
NUP207 E	35	5.5
NUP2072	360	5.5
NUP2076	380	5.5
NUP208 E	40	5.5
NUP2080	400	5.5
NUP2084	420	5.5
NUP2088	440	5.5
NUP209 E	45	5.5
NUP2092	460	5.5
NUP2096	480	5.5
NUP210 E	50	5.5
NUP211 E	55	5.5
NUP212 E	60	5.5
NUP213 E	65	5.5
NUP214 E	70	5.5
NUP215 E	75	5.5
NUP216 E	80	5.5
NUP217 E	85	5.5
NUP218 E	90	5.5
NUP219 E	95	5.5
NUP220 E	100	5.5
NUP2203 E	17	5.5
NUP2204 E	20	5.5
NUP2205 E	25	5.5
NUP2206 E	30	5.5
NUP2207 E	35	5.5
NUP2208 E	40	5.5
NUP2209 E	45	5.5
NUP221 E	105	5.5
NUP2210 E	50	5.5
NUP2211 E	55	5.5
NUP2212 E	60	5.5
NUP2213 E	65	5.5
NUP2214 E	70	5.5
NUP2215 E	75	5.5
NUP2216 E	80	5.5
NUP2217 E	85	5.5
NUP2218 E	90	5.5
NUP2219 E	95	5.5
NUP222 E	110	5.5
NUP2220 E	100	5.5
NUP2222 E	110	5.5
NUP2224 E	120	5.5
NUP2226 E	130	5.5
NUP2228 E	140	5.5
NUP2230 E	150	5.5
NUP2232 E	160	5.5
NUP2234 E	170	5.5
NUP2236 E	180	5.5
NUP2238 E	190	5.5
NUP224 E	120	5.5
NUP2240 E	200	5.5

Index	d [mm]	Tab.No
NUP2244 E	220	5.5
NUP2248 E	240	5.5
NUP2252 E	260	5.5
NUP2256 E	280	5.5
NUP226 E	130	5.5
NUP2260	300	5.5
NUP2264	320	5.5
NUP2268	340	5.5
NUP2272	360	5.5
NUP2276	380	5.5
NUP228 E	140	5.5
NUP2292	460	5.5
NUP230 E	150	5.5
NUP2304 E	20	5.5
NUP2305 E	25	5.5
NUP2306 E	30	5.5
NUP2307 E	35	5.5
NUP2308 E	40	5.5
NUP2309 E	45	5.5
NUP2310 E	50	5.5
NUP2311 E	55	5.5
NUP2312 E	60	5.5
NUP2313 E	65	5.5
NUP2314 E	70	5.5
NUP2315 E	75	5.5
NUP2316 E	80	5.5
NUP2317 E	85	5.5
NUP2318 E	90	5.5
NUP2319 E	95	5.5
NUP232 E	160	5.5
NUP2320 E	100	5.5
NUP2322 E	110	5.5
NUP2324 E	120	5.5
NUP2326 E	130	5.5
NUP2328 E	140	5.5
NUP2330 E	150	5.5
NUP2332 E	160	5.5
NUP2334 E	170	5.5
NUP2336 E	180	5.5
NUP2338 E	190	5.5
NUP234 E	170	5.5
NUP2340 E	200	5.5
NUP2344 E	220	5.5
NUP2348 E	240	5.5
NUP2352 E	260	5.5
NUP2356 E	280	5.5
NUP236 E	180	5.5
NUP2360	300	5.5
NUP2372	360	5.5
NUP238 E	190	5.5
NUP240 E	200	5.5
NUP244 E	220	5.5
NUP248 E	240	5.5
NUP252 E	260	5.5
NUP256 E	280	5.5
NUP260 E	300	5.5
NUP264 E	320	5.5
NUP28/1000	1000	5.5
NUP28/500	500	5.5
NUP28/530	530	5.5
NUP28/600	600	5.5
NUP28/630	630	5.5
NUP28/850	850	5.5
NUP28/900	900	5.5
NUP2840	200	5.5
NUP2860	300	5.5
NUP2864	320	5.5
NUP2868	340	5.5
NUP2888	440	5.5
NUP2892	460	5.5
NUP2896	480	5.5
NUP29/1000	1000	5.5
NUP29/1060	1060	5.5
NUP29/1180	1180	5.5
NUP29/1320	1320	5.5
NUP29/500	500	5.5
NUP29/530	530	5.5
NUP29/560	560	5.5
NUP29/600	600	5.5
NUP29/630	630	5.5
NUP29/710	710	5.5
NUP29/900	900	5.5
NUP29/950	950	5.5
NUP2924	120	5.5
NUP2926	130	5.5
NUP2928	140	5.5
NUP2932	160	5.5
NUP2944	220	5.5
NUP2952	260	5.5
NUP2968	340	5.5

https://nppnovoteh.com

Index	d [mm]	Tab.No
NUP2972	360	5.5
NUP2984	420	5.5
NUP2988	440	5.5
NUP2992	460	5.5
NUP2996	480	5.5
NUP30/1120	1120	5.5
NUP30/500	500	5.5
NUP30/530 E	530	5.5
NUP30/600	600	5.5
NUP30/630	630	5.5
NUP30/670	670	5.5
NUP3013	65	5.5
NUP302 E	15	5.5
NUP303 E	17	5.5
NUP3030	150	5.5
NUP3034	170	5.5
NUP3036	180	5.5
NUP3038	190	5.5
NUP304 E	20	5.5
NUP3040	200	5.5
NUP3048	240	5.5
NUP305 E	25	5.5
NUP3052	260	5.5
NUP306 E	30	5.5
NUP3060	300	5.5
NUP3064	320	5.5
NUP3068	340	5.5
NUP307 E	35	5.5
NUP3072	360	5.5
NUP3076	380	5.5
NUP308 E	40	5.5
NUP3080	400	5.5
NUP3084	420	5.5
NUP309 E	45	5.5
NUP3092	460	5.5
NUP3096	480	5.5
NUP31/500	500	5.5
NUP31/530	530	5.5
NUP31/560	560	5.5
NUP310 E	50	5.5
NUP311 E	55	5.5
NUP312 E	60	5.5
NUP313 E	65	5.5
NUP3132	160	5.5
NUP3138	190	5.5
NUP314 E	70	5.5
NUP3144	220	5.5
NUP315 E	75	5.5
NUP3152	260	5.5
NUP3156	280	5.5
NUP316 E	80	5.5
NUP3160	300	5.5
NUP3164	320	5.5
NUP3168	340	5.5
NUP317 E	85	5.5
NUP3172	360	5.5
NUP318 E	90	5.5
NUP3184	420	5.5
NUP3188	440	5.5
NUP319 E	95	5.5
NUP3192	460	5.5
NUP3196	480	5.5
NUP320 E	100	5.5
NUP3206	30	5.5
NUP3207	35	5.5
NUP3208	40	5.5
NUP3209	45	5.5
NUP321 E	105	5.5
NUP3210	50	5.5
NUP3211	55	5.5
NUP3212	60	5.5
NUP3213	65	5.5
NUP3214	70	5.5
NUP3215	75	5.5
NUP3216	80	5.5
NUP3217	85	5.5
NUP3218	90	5.5
NUP3219	95	5.5
NUP322 E	110	5.5
NUP3220	100	5.5
NUP3221	105	5.5
NUP3222	110	5.5
NUP3224	120	5.5
NUP3226	130	5.5
NUP3228	140	5.5
NUP3230	150	5.5
NUP3232	160	5.5
NUP3234	170	5.5
NUP3236	180	5.5
NUP3238	190	5.5

Index	d [mm]	Tab.No
NUP324 E	120	5.5
NUP3240	200	5.5
NUP3244	220	5.5
NUP3248	240	5.5
NUP3252	260	5.5
NUP326 E	130	5.5
NUP328 E	140	5.5
NUP330 E	150	5.5
NUP3306	30	5.5
NUP3307	35	5.5
NUP3308	40	5.5
NUP3309	45	5.5
NUP3310	50	5.5
NUP3311	55	5.5
NUP3312	60	5.5
NUP3313	65	5.5
NUP3314	70	5.5
NUP3315	75	5.5
NUP3316	80	5.5
NUP3317	85	5.5
NUP3318	90	5.5
NUP3319	95	5.5
NUP332 E	160	5.5
NUP3320	100	5.5
NUP3321	105	5.5
NUP3322	110	5.5
NUP3324	120	5.5
NUP3326	130	5.5
NUP3328	140	5.5
NUP3330	150	5.5
NUP3332	160	5.5
NUP3334	170	5.5
NUP3336	180	5.5
NUP3338	190	5.5
NUP334 E	170	5.5
NUP3340	200	5.5
NUP3344	220	5.5
NUP3348	240	5.5
NUP3352	260	5.5
NUP336 E	180	5.5
NUP338 E	190	5.5
NUP340 E	200	5.5
NUP344 E	220	5.5
NUP348 E	240	5.5
NUP352 E	260	5.5
NUP356 E	280	5.5
NUP364	320	5.5
NUP38/500	500	5.5
NUP38/950	950	5.5
NUP3856	280	5.5
NUP3860	300	5.5
NUP3868	340	5.5
NUP3876	380	5.5
NUP3880	400	5.5
NUP3884	420	5.5
NUP39/1060	1060	5.5
NUP39/500	500	5.5
NUP3988	440	5.5
NUP406	30	5.5
NUP407	35	5.5
NUP408	40	5.5
NUP409	45	5.5
NUP410	50	5.5
NUP411	55	5.5
NUP412	60	5.5
NUP413	65	5.5
NUP414	70	5.5
NUP415	75	5.5
NUP416	80	5.5
NUP417	85	5.5
NUP418	90	5.5
NUP419	95	5.5
NUP420	100	5.5
NUP421	105	5.5
NUP422	110	5.5
NUP424	120	5.5
NUP426	130	5.5
NUP428	140	5.5
NUP430	150	5.5
NUP436	180	5.5
NUP5208	40	5.5
NUP5209	45	5.5
NUP5210	50	5.5
NUP5211	55	5.5
NUP5212	60	5.5
NUP5213	65	5.5
NUP5214	70	5.5
NUP5215	75	5.5
NUP5216	80	5.5
NUP5217	85	5.5

Index	d [mm]	Tab.No
NUP5218	90	5.5
NUP5219	95	5.5
NUP5220	100	5.5
NUP5221	105	5.5
NUP5222	110	5.5
NUP5224	120	5.5
NUP5226	130	5.5
NUP5228	140	5.5
NUP5230	150	5.5
NUP5232	160	5.5
NUP5234	170	5.5
NUTR 15	15	13.3
NUTR 15/42	15	13.3
NUTR 17	17	13.3
NUTR 17/47	17	13.3
NUTR 20	20	13.3
NUTR 20/52	20	13.3
NUTR 25	25	13.3
NUTR 25/62	25	13.3
NUTR 30	30	13.3
NUTR 30/72	30	13.3
NUTR 35	35	13.3
NUTR 35/80	35	13.3
NUTR 40	40	13.3
NUTR 40/90	40	13.3
NUTR 45	45	13.3
NUTR 45/100	45	13.3
NUTR 50	50	13.3
NUTR 50/110	50	13.3
NX 10	10	6.6
NX 10 Z	10	6.6
NX 12	12	6.6
NX 12 Z	12	6.6
NX 15	15	6.6
NX 15 Z	15	6.6
NX 17	17	6.6
NX 17 Z	17	6.6
NX 20	20	6.6
NX 20 Z	20	6.6
NX 25	25	6.6
NX 25 Z	25	6.6
NX 30	30	6.6
NX 30 Z	30	6.6
NX 35	35	6.6
NX 35 Z	35	6.6
NX 7	7	6.6
NX 7 Z	7	6.6
PNA 12/28	12	6.5
PNA 15/32	15	6.5
PNA 17/35	17	6.5
PNA 20/42	20	6.5
PNA 22/44	22	6.5
PNA 25/47	25	6.5
PNA 30/52	30	6.5
PNA 35/55	35	6.5
PNA 40/62	40	6.5
Q1005	25	2.5
Q1006	30	2.5
Q1007	35	2.5
Q1008	40	2.5
Q1009	45	2.5
Q1010	50	2.5
Q1011	55	2.5
Q1012	60	2.5
Q1013	65	2.5
Q1014	70	2.5
Q1015	75	2.5
Q1016	80	2.5
Q1017	85	2.5
Q1018	90	2.5
Q1019	95	2.5
Q1020	100	2.5
Q1021	105	2.5
Q1022	110	2.5
Q1024	120	2.5
Q1026	130	2.5
Q1028	140	2.5
Q1030	150	2.5
Q1032	160	2.5
Q1034	170	2.5
Q1036	180	2.5
Q1038	190	2.5
Q1040	200	2.5
Q1044	220	2.5
Q1048	240	2.5
Q1052	260	2.5
Q1056	280	2.5
Q1060	300	2.5
Q1064	320	2.5
Q1068	340	2.5

Index	d [mm]	Tab.No
Q1072	360	2.5
Q1076	380	2.5
Q1080	400	2.5
Q1084	420	2.5
Q1088	440	2.5
Q1092	460	2.5
Q1096	480	2.5
Q202	15	2.5
Q203	17	2.5
Q204	20	2.5
Q205	25	2.5
Q206	30	2.5
Q207	35	2.5
Q208	40	2.5
Q209	45	2.5
Q210	50	2.5
Q211	55	2.5
Q212	60	2.5
Q213	65	2.5
Q214	70	2.5
Q215	75	2.5
Q216	80	2.5
Q217	85	2.5
Q218	90	2.5
Q219	95	2.5
Q220	100	2.5
Q222	110	2.5
Q224	120	2.5
Q226	130	2.5
Q228	140	2.5
Q230	150	2.5
Q232	160	2.5
Q234	170	2.5
Q236	180	2.5
Q240	200	2.5
Q244	220	2.5
Q248	240	2.5
Q303	17	2.5
Q304	20	2.5
Q305	25	2.5
Q306	30	2.5
Q307	35	2.5
Q308	40	2.5
Q309	45	2.5
Q310	50	2.5
Q311	55	2.5
Q312	60	2.5
Q313	65	2.5
Q314	70	2.5
Q315	75	2.5
Q316	80	2.5
Q317	85	2.5
Q318	90	2.5
Q319	95	2.5
Q320	100	2.5
Q321	105	2.5
Q322	110	2.5
Q324	120	2.5
Q326	130	2.5
Q328	140	2.5
Q330	150	2.5
Q332	160	2.5
Q334	170	2.5
Q336	180	2.5
Q338	190	2.5
Q340	200	2.5
QJ1005	25	2.5
QJ1006	30	2.5
QJ1007	35	2.5
QJ1008	40	2.5
QJ1009	45	2.5
QJ1010	50	2.5
QJ1011	55	2.5
QJ1012	60	2.5
QJ1013	65	2.5
QJ1014	70	2.5
QJ1015	75	2.5
QJ1016	80	2.5
QJ1017	85	2.5
QJ1018	90	2.5
QJ1019	95	2.5
QJ1020	100	2.5
QJ1021	105	2.5
QJ1022	110	2.5
QJ1024	120	2.5
QJ1026	130	2.5
QJ1028	140	2.5
QJ1030	150	2.5
QJ1032	160	2.5
QJ1034	170	2.5

Index	d [mm]	Tab.No
QJ1036	180	2.5
QJ1038	190	2.5
QJ1040	200	2.5
QJ1044	220	2.5
QJ1048	240	2.5
QJ1052	260	2.5
QJ1056	280	2.5
QJ1060	300	2.5
QJ1064	320	2.5
QJ1068	340	2.5
QJ1072	360	2.5
QJ1076	380	2.5
QJ1080	400	2.5
QJ1084	420	2.5
QJ1088	440	2.5
QJ1092	460	2.5
QJ1096	480	2.5
QJ1240	200	2.5
QJ1244	220	2.5
QJ1248	240	2.5
QJ1252	260	2.5
QJ1256	280	2.5
QJ1260	300	2.5
QJ1264	320	2.5
QJ1268	340	2.5
QJ1272	360	2.5
QJ1276	380	2.5
QJ1280	400	2.5
QJ1284	420	2.5
QJ1288	440	2.5
QJ1292	460	2.5
QJ1296	480	2.5
QJ1984	420	2.5
QJ1988	440	2.5
QJ200	10	2.5
QJ201	12	2.5
QJ202	15	2.5
QJ203	17	2.5
QJ204	20	2.5
QJ205	25	2.5
QJ206	30	2.5
QJ207	35	2.5
QJ208	40	2.5
QJ209	45	2.5
QJ210	50	2.5
QJ211	55	2.5
QJ212	60	2.5
QJ213	65	2.5
QJ214	70	2.5
QJ215	75	2.5
QJ216	80	2.5
QJ217	85	2.5
QJ218	90	2.5
QJ219	95	2.5
QJ220	100	2.5
QJ221	105	2.5
QJ222	110	2.5
QJ224	120	2.5
QJ226	130	2.5
QJ228	140	2.5
QJ230	150	2.5
QJ232	160	2.5
QJ234	170	2.5
QJ236	180	2.5
QJ240	200	2.5
QJ244	220	2.5
QJ248	240	2.5
QJ252	260	2.5
QJ302	15	2.5
QJ303	17	2.5
QJ304	20	2.5
QJ305	25	2.5
QJ306	30	2.5
QJ307	35	2.5
QJ308	40	2.5
QJ309	45	2.5
QJ310	50	2.5
QJ311	55	2.5
QJ312	60	2.5
QJ313	65	2.5
QJ314	70	2.5
QJ315	75	2.5
QJ316	80	2.5
QJ317	85	2.5
QJ318	90	2.5
QJ319	95	2.5
QJ320	100	2.5
QJ321	105	2.5
QJ322	110	2.5
QJ324	120	2.5

https://nppnovoteh.com

23. INDEX

Index	d [mm]	Tab.No
QJ326	130	2.5
QJ328	140	2.5
QJ330	150	2.5
QJ332	160	2.5
QJ334	170	2.5
QJ336	180	2.5
QJ338	190	2.5
QJ340	200	2.5
QJ344	220	2.5
RBL 200 FZZ	10	13.1
RBL 200 ZZ	10	13.1
RBL 201 FRZZ	12	13.1
RBL 201 FZZ	12	13.1
RBL 201 ZZ	12	13.1
RBL 202 FRZZ	15	13.1
RBL 202 FZZ	15	13.1
RBL 202 ZZ	15	13.1
RBL 203 FZZ	17	13.1
RBL 203 ZZ	17	13.1
RBL 204 FZZ	20	13.1
RBL 204 ZZ	20	13.1
RBL 205 FZZ	25	13.1
RBL 205 ZZ	25	13.1
RBL 206 FZZ	30	13.1
RBL 206 ZZ	30	13.1
RBL 207 FZZ	35	13.1
RBL 207 ZZ	35	13.1
RBL 208 FZZ	40	13.1
RBL 208 ZZ	40	13.1
RBL 209 FZZ	45	13.1
RBL 209 ZZ	45	13.1
RBL 50/5 F2RS	5	13.1
RBL 50/6 F2RS	6	13.1
RBL 50/7 F2RS	7	13.1
RBL 50/8 F2RS	8	13.1
RBL 5000 F2RS	10	13.1
RBL 5001 F2RS	12	13.1
RBL 5002 F2RS	15	13.1
RBL 5003 F2RS	17	13.1
RBL 5004 F2RS	20	13.1
RBL 5005 F2RS	25	13.1
RBL 5006 F2RS	30	13.1
RBL 5007 F2RS	35	13.1
RBL 5008 F2RS	40	13.1
RBL 5200 F2RS	10	13.1
RBL 5200 FZZ	10	13.1
RBL 5200 ZZ	10	13.1
RBL 5201 F2RS	12	13.1
RBL 5201 FZZ	12	13.1
RBL 5201 ZZ	12	13.1
RBL 5202 F2RS	15	13.1
RBL 5202 FZZ	15	13.1
RBL 5202 ZZ	15	13.1
RBL 5203 F2RS	17	13.1
RBL 5203 FZZ	17	13.1
RBL 5203 ZZ	17	13.1
RBL 5204 F2RS	20	13.1
RBL 5204 FZZ	20	13.1
RBL 5204 ZZ	20	13.1
RBL 5205 F2RS	25	13.1
RBL 5205 FZZ	25	13.1
RBL 5205 ZZ	25	13.1
RBL 5206 F2RS	30	13.1
RBL 5206 FZZ	30	13.1
RBL 5206 ZZ	30	13.1
RBL 5207 F2RS	35	13.1
RBL 5207 FZZ	35	13.1
RBL 5207 ZZ	35	13.1
RBL 5208 F2RS	40	13.1
RBL 5208 FZZ	40	13.1
RBL 5208 ZZ	40	13.1
RBL 5301 F2RS	12	13.1
RBL 5302 F2RS	15	13.1
RBL 5303 F2RS	17	13.1
RBL 5304 F2RS	20	13.1
RBL 5304 FZZ	20	13.1
RBL 5304 ZZ	20	13.1
RBL 5305 F2RS	25	13.1
RBL 5305 FZZ	25	13.1
RBL 5305 ZZ	25	13.1
RBL 5306 F2RS	30	13.1
RBL 5306 FZZ	30	13.1
RBL 5306 ZZ	30	13.1
RBL 5307 F2RS	35	13.1
RBL 5307 FZZ	35	13.1
RBL 5307 ZZ	35	13.1
RBL 5308 F2RS	40	13.1
RBL 5308 FZZ	40	13.1
RBL 5308 ZZ	40	13.1
RBL 6000 FZZ	10	13.1
RBL 6001 FZZ	12	13.1
RBL 6002 FZZ	15	13.1
RBL 6003 FZZ	17	13.1
RBL 6004 FZZ	20	13.1
RBL 604 FZZ	4	13.1
RBL 605 FZZ	5	13.1
RBL 606 FZZ	6	13.1
RBL 607 FZZ	7	13.1
RBL 608 FZZ	8	13.1
RBT5201 F2RS	35	13.2
RBT5202 F2RS	40	13.2
RBT5203 F2RS	47	13.2
RBT5204 F2RS	52	13.2
RBT5205 F2RS	62	13.2
RBT5206 F2RS	72	13.2
RBT5207 F2RS	80	13.2
RN10/500	500	5.6
RN10/560	560	5.6
RN10/800	800	5.6
RN18/1600	1600	5.6
RN18/500	500	5.6
RN18/670	670	5.6
RN18/710	710	5.6
RN1872	360	5.6
RN1880	400	5.6
RN1892	460	5.6
RN19/500	500	5.6
RN19/530	530	5.6
RN19/560	560	5.6
RN19/600	600	5.6
RN19/630	630	5.6
RN19/710	710	5.6
RN19/750	750	5.6
RN19/850	850	5.6
RN1920	100	5.6
RN1921	105	5.6
RN1926	130	5.6
RN1928	140	5.6
RN1932	160	5.6
RN1952	260	5.6
RN1956	280	5.6
RN1960	300	5.6
RN1968	340	5.6
RN1972	360	5.6
RN1984	420	5.6
RN1992	460	5.6
RN1996	480	5.6
RN20/1250	1250	5.6
RN202 E	15	5.6
RN203 E	17	5.6
RN204 E	20	5.6
RN205 E	25	5.6
RN206 E	30	5.6
RN207 E	35	5.6
RN208 E	40	5.6
RN209 E	45	5.6
RN210 E	50	5.6
RN211 E	55	5.6
RN212 E	60	5.6
RN213 E	65	5.6
RN214 E	70	5.6
RN215 E	75	5.6
RN216 E	80	5.6
RN217 E	85	5.6
RN218 E	90	5.6
RN219 E	95	5.6
RN220 E	100	5.6
RN221 E	105	5.6
RN222 E	110	5.6
RN2220 E	100	5.6
RN2222 E	110	5.6
RN2224 E	120	5.6
RN2226 E	130	5.6
RN2228 E	140	5.6
RN2230 E	150	5.6
RN2232 E	160	5.6
RN2234 E	170	5.6
RN2236 E	180	5.6
RN2238	190	5.6
RN224 E	120	5.6
RN2240	200	5.6
RN2244	220	5.6
RN2248	240	5.6
RN2252	260	5.6
RN226 E	130	5.6
RN228 E	140	5.6
RN230 E	150	5.6
RN232 E	160	5.6
RN2320 E	100	5.6
RN2321	105	5.6
RN2322 E	120	5.6
RN2324 E	120	5.6
RN2326 E	130	5.6
RN2328 E	140	5.6
RN2330 E	150	5.6
RN2332 E	160	5.6
RN2334	170	5.6
RN2336	180	5.6
RN2338	190	5.6
RN234 E	170	5.6
RN2340	200	5.6
RN2344	220	5.6
RN2348	240	5.6
RN2352	260	5.6
RN236 E	180	5.6
RN238 E	190	5.6
RN240 E	200	5.6
RN244 E	220	5.6
RN248 E	240	5.6
RN252 E	260	5.6
RN256 E	280	5.6
RN260 E	300	5.6
RN264 E	320	5.6
RN28/1000	1000	5.6
RN28/1060	1060	5.6
RN28/1400	1400	5.6
RN28/630	630	5.6
RN28/710	710	5.6
RN28/850	850	5.6
RN28/900	900	5.6
RN29/500	500	5.6
RN29/530	530	5.6
RN29/560	560	5.6
RN29/630	630	5.6
RN29/710	710	5.6
RN29/850	850	5.6
RN2924	120	5.6
RN2926	130	5.6
RN2928	140	5.6
RN2932	160	5.6
RN2944	220	5.6
RN2952	260	5.6
RN2968	340	5.6
RN2972	360	5.6
RN2996	480	5.6
RN30/1060	1060	5.6
RN30/1320	1320	5.6
RN30/530 E	530	5.6
RN3030	150	5.6
RN3034	170	5.6
RN3036	180	5.6
RN3038	190	5.6
RN304 E	20	5.6
RN3040	200	5.6
RN3048	240	5.6
RN305 E	25	5.6
RN306 E	30	5.6
RN3060	300	5.6
RN3064	320	5.6
RN3068	340	5.6
RN307 E	35	5.6
RN3072	360	5.6
RN3076	380	5.6
RN308 E	40	5.6
RN3080	400	5.6
RN3084	420	5.6
RN309 E	45	5.6
RN3092	460	5.6
RN3096	480	5.6
RN31/560	560	5.6
RN310 E	50	5.6
RN311 E	55	5.6
RN312 E	60	5.6
RN313 E	65	5.6
RN3132	160	5.6
RN3138	190	5.6
RN314 E	70	5.6
RN3144	220	5.6
RN315 E	75	5.6
RN3152	260	5.6
RN3156	280	5.6
RN316 E	80	5.6
RN3160	300	5.6
RN317 E	85	5.6
RN318 E	90	5.6
RN319 E	95	5.6
RN320 E	100	5.6
RN321 E	105	5.6
RN322 E	110	5.6
RN3220	100	5.6
RN3221	105	5.6
RN3222	110	5.6
RN3224	120	5.6
RN3226	130	5.6
RN3228	140	5.6
RN3236	180	5.6
RN3238	190	5.6
RN324 E	120	5.6
RN3240	200	5.6
RN3244	220	5.6
RN3248	240	5.6
RN3252	260	5.6
RN326 E	130	5.6
RN328 E	140	5.6
RN330 E	150	5.6
RN332 E	160	5.6
RN3320	100	5.6
RN3326	130	5.6
RN3330	150	5.6
RN3332	160	5.6
RN3336	180	5.6
RN3338	190	5.6
RN334 E	170	5.6
RN3340	220	5.6
RN3344	220	5.6
RN3352	260	5.6
RN336 E	180	5.6
RN338 E	190	5.6
RN340 E	200	5.6
RN344 E	220	5.6
RN348 E	240	5.6
RN38/500	500	5.6
RN38/630	630	5.6
RN38/950	950	5.6
RN3856	280	5.6
RN3860	300	5.6
RN3868	340	5.6
RN3876	380	5.6
RN3880	400	5.6
RN3884	420	5.6
RN39/1180	1180	5.6
RN39/1320	1320	5.6
RN39/500	500	5.6
RN406	30	5.6
RN407	35	5.6
RN408	40	5.6
RN409	45	5.6
RN410	50	5.6
RN411	55	5.6
RN412	60	5.6
RN413	65	5.6
RN414	70	5.6
RN415	75	5.6
RN416	80	5.6
RN417	85	5.6
RN418	90	5.6
RN419	95	5.6
RN420	100	5.6
RN421	105	5.6
RN422	110	5.6
RN424	120	5.6
RN426	130	5.6
RN428	140	5.6
RN430	150	5.6
RNA22/6 2RS	10	6.1
RNA22/6 2RS	10	13.3
RNA22/8 2RS	12	6.1
RNA22/8 2RS	12	13.3
RNA2200 2RS	14	6.1
RNA2200 2RS	14	13.3
RNA2201 2RS	16	6.1
RNA2201 2RS	16	13.3
RNA2202 2RS	20	6.1
RNA2202 2RS	20	13.3
RNA2203 2RS	22	6.1
RNA2203 2RS	22	13.3
RNA2204 2RS	25	6.1
RNA2204 2RS	25	13.3
RNA2205 2RS	30	6.1
RNA2205 2RS	30	13.3
RNA2206 2RS	35	6.1
RNA2206 2RS	35	13.3
RNA2207 2RS	42	6.1
RNA2207 2RS	42	13.3
RNA2208 2RS	48	6.1
RNA2208 2RS	48	13.3
RNA2209 2RS	52	6.1
RNA2209 2RS	52	13.3
RNA2210 2RS	58	6.1
RNA2210 2RS	58	13.3
RNA4004 V	28	6.1
RNA4004 V	28	13.3
RNA4005 V	34	6.1
RNA4005 V	34	13.3
RNA4006 V	40	6.1
RNA4006 V	40	13.3
RNA4007 V	46	6.1
RNA4007 V	46	13.3
RNA4008 V	52	6.1
RNA4008 V	52	13.3
RNA4010 V	62	6.1
RNA4010 V	62	13.3
RNA4822	120	6.1
RNA4824	130	6.1
RNA4826	145	6.1
RNA4828	155	6.1
RNA4830	165	6.1
RNA4832	175	6.1
RNA4834	185	6.1
RNA4836	195	6.1
RNA4838	210	6.1
RNA4840	220	6.1
RNA4844	240	6.1
RNA4848	265	6.1
RNA4852	285	6.1
RNA4856	305	6.1
RNA4860	330	6.1
RNA4864	350	6.1
RNA4868	370	6.1
RNA4872	390	6.1
RNA4876	415	6.1
RNA49/22	28	6.1
RNA49/28	32	6.1
RNA49/32	40	6.1
RNA4900	14	6.1
RNA4900 2RS	14	6.1
RNA4901	16	6.1
RNA4901 2RS	16	6.1
RNA4902	20	6.1
RNA4902 2RS	20	6.1
RNA4903	22	6.1
RNA4903 2RS	22	6.1
RNA4904	25	6.1
RNA4904 2RS	25	6.1
RNA4905	30	6.1
RNA4905 2RS	30	6.1
RNA4906	35	6.1
RNA4906 2RS	35	6.1
RNA4907	42	6.1
RNA4907 2RS	42	6.1
RNA4908	48	6.1
RNA4908 2RS	48	6.1
RNA4909	52	6.1
RNA4909 2RS	52	6.1
RNA4910	58	6.1
RNA4910 2RS	58	6.1
RNA4911	63	6.1
RNA4912	68	6.1
RNA4913	72	6.1
RNA4914	80	6.1
RNA4915	85	6.1
RNA4916	90	6.1
RNA4917	100	6.1
RNA4918	105	6.1
RNA4919	110	6.1
RNA4920	115	6.1
RNA4922	125	6.1
RNA4924	135	6.1
RNA4926	150	6.1
RNA4928	160	6.1
RNA4930	170	6.1
RNA4932	180	6.1
RNA4934	190	6.1
RNA4936	205	6.1
RNA4938	215	6.1
RNA4940	225	6.1
RNA4944	245	6.1
RNA4948	265	6.1
RNA495	7	6.1
RNA4952	290	6.1
RNA4956	310	6.1
RNA496	8	6.1
RNA4960	340	6.1
RNA4964	360	6.1
RNA4968	380	6.1
RNA497	9	6.1
RNA4972	400	6.1
RNA4976	430	6.1
RNA498	10	6.1
RNA4980	450	6.1

Index	d [mm]	Tab.No
RNA4984	470	6.1
RNA4988	490	6.1
RNA499	12	6.1
RNA59/22	28	6.1
RNA59/28	32	6.1
RNA59/32	40	6.1
RNA5902	20	6.1
RNA5903	22	6.1
RNA5904	25	6.1
RNA5905	30	6.1
RNA5906	35	6.1
RNA5907	42	6.1
RNA5908	48	6.1
RNA5909	52	6.1
RNA5910	58	6.1
RNA5911	63	6.1
RNA5912	68	6.1
RNA5913	72	6.1
RNA5914	80	6.1
RNA5915	85	6.1
RNA5916	90	6.1
RNA5917	100	6.1
RNA5918	105	6.1
RNA5919	110	6.1
RNA5920	115	6.1
RNA5922	125	6.1
RNA5924	135	6.1
RNA5926	150	6.1
RNA5928	160	6.1
RNA69/22	28	6.1
RNA69/28	32	6.1
RNA69/32	40	6.1
RNA6901	16	6.1
RNA6902	20	6.1
RNA6903	22	6.1
RNA6904	25	6.1
RNA6905	30	6.1
RNA6906	35	6.1
RNA6907	42	6.1
RNA6908	48	6.1
RNA6909	52	6.1
RNA6910	58	6.1
RNA6911	63	6.1
RNA6912	68	6.1
RNA6913	72	6.1
RNA6914	80	6.1
RNA6915	85	6.1
RNA6916	90	6.1
RNA6917	100	6.1
RNA6918	105	6.1
RNA6919	110	6.1
RNAO100x120x30	100	6.1
RNAO10x17x10	10	6.1
RNAO12x22x12	12	6.1
RNAO15x23x13	15	6.1
RNAO16x24x13	16	6.1
RNAO16x28x12	16	6.1
RNAO17x25x13	17	6.1
RNAO18x30x24	18	6.1
RNAO20x28x13	20	6.1
RNAO20x28x26	20	6.1
RNAO20x32x12	20	6.1
RNAO22x30x13	22	6.1
RNAO22x35x16	22	6.1
RNAO25x35x17	25	6.1
RNAO25x35x26	25	6.1
RNAO25x37x16	25	6.1
RNAO30x40x17	30	6.1
RNAO30x42x16	30	6.1
RNAO30x42x32	30	6.1
RNAO35x45x13	35	6.1
RNAO35x45x17	35	6.1
RNAO35x45x26	35	6.1
RNAO35x47x16	35	6.1
RNAO35x47x18	35	6.1
RNAO35x47x32	35	6.1
RNAO40x50x17	40	6.1
RNAO40x50x34	40	6.1
RNAO40x55x20	40	6.1
RNAO40x55x40	40	6.1
RNAO45x55x17	45	6.1
RNAO45x62x40	45	6.1
RNAO50x62x20	50	6.1
RNAO50x65x20	50	6.1
RNAO50x65x40	50	6.1
RNAO55x68x20	55	6.1
RNAO5x10x8	5	6.1
RNAO60x78x20	60	6.1
RNAO60x78x40	60	6.1
RNAO65x85x30	65	6.1

Index	d [mm]	Tab.No
RNAO6x13x8	6	6.1
RNAO70x90x30	70	6.1
RNAO7x14x8	7	6.1
RNAO80x100x30	80	6.1
RNAO8x15x10	8	6.1
RNAO90x105x26	90	6.1
RNAO90x110x30	90	6.1
RNN30/500	500	5.7
RNN30/500 K	500	5.7
RNN30/600	600	5.7
RNN30/600 K	600	5.7
RNN3005	25	5.7
RNN3005 K	25	5.7
RNN3006	30	5.7
RNN3006 K	30	5.7
RNN3007	35	5.7
RNN3007 K	35	5.7
RNN3008	40	5.7
RNN3008 K	40	5.7
RNN3009	45	5.7
RNN3009 K	45	5.7
RNN3010	50	5.7
RNN3010 K	50	5.7
RNN3011	55	5.7
RNN3011 K	55	5.7
RNN3012	60	5.7
RNN3012 K	60	5.7
RNN3013	65	5.7
RNN3013 K	65	5.7
RNN3014	70	5.7
RNN3014 K	70	5.7
RNN3015	75	5.7
RNN3015 K	75	5.7
RNN3016	80	5.7
RNN3016 K	80	5.7
RNN3017	85	5.7
RNN3017 K	85	5.7
RNN3018	90	5.7
RNN3018 K	90	5.7
RNN3019	95	5.7
RNN3019 K	95	5.7
RNN3020	100	5.7
RNN3020 K	100	5.7
RNN3021	105	5.7
RNN3021 K	105	5.7
RNN3022	110	5.7
RNN3022 K	110	5.7
RNN3024	120	5.7
RNN3024 K	120	5.7
RNN3026	130	5.7
RNN3026 K	130	5.7
RNN3028	140	5.7
RNN3028 K	140	5.7
RNN3030	150	5.7
RNN3030 K	150	5.7
RNN3032	160	5.7
RNN3032 K	160	5.7
RNN3034	170	5.7
RNN3034 K	170	5.7
RNN3036	180	5.7
RNN3036 K	180	5.7
RNN3038	190	5.7
RNN3038 K	190	5.7
RNN3040	200	5.7
RNN3040 K	200	5.7
RNN3044	220	5.7
RNN3044 K	220	5.7
RNN3048	240	5.7
RNN3048 K	240	5.7
RNN3052	260	5.7
RNN3052 K	260	5.7
RNN3056	280	5.7
RNN3056 K	280	5.7
RNN3060	300	5.7
RNN3060 K	300	5.7
RNN3064	320	5.7
RNN3064 K	320	5.7
RNN3068	340	5.7
RNN3068 K	340	5.7
RNN3072	360	5.7
RNN3072 K	360	5.7
RNN3076	380	5.7
RNN3076 K	380	5.7
RNN3080	400	5.7
RNN3080 K	400	5.7
RNN3084	420	5.7
RNN3084 K	420	5.7
RNN3088	440	5.7
RNN3088 K	440	5.7
RNN3092	460	5.7

Index	d [mm]	Tab.No
RNN3092 K	460	5.7
RNN3096	480	5.7
RNN3096 K	480	5.7
RNN3120	100	5.7
RNN3120 K	100	5.7
RNN3122	110	5.7
RNN3122 K	110	5.7
RNN3124	120	5.7
RNN3124 K	120	5.7
RNN3126	130	5.7
RNN3126 K	130	5.7
RNN3128	140	5.7
RNN3128 K	140	5.7
RNN3132	160	5.7
RNN3132 K	160	5.7
RNN3134	170	5.7
RNN3134 K	170	5.7
RNN3136	180	5.7
RNN3136 K	180	5.7
RNN3138	190	5.7
RNN3138 K	190	5.7
RNN3140	200	5.7
RNN3140 K	200	5.7
RNN3144	220	5.7
RNN3144 K	220	5.7
RNN3148	240	5.7
RNN3148 K	240	5.7
RNN3156	280	5.7
RNN3156 K	280	5.7
RNN3160	300	5.7
RNN3160 K	300	5.7
RNN3164	320	5.7
RNN3164 K	320	5.7
RNN3172	360	5.7
RNN3172 K	360	5.7
RNN3176	380	5.7
RNN3176 K	380	5.7
RNN3184	420	5.7
RNN3184 K	420	5.7
RNN3196	480	5.7
RNN3196 K	480	5.7
RNN3972	360	5.7
RNN3972 K	360	5.7
RNN3980	400	5.7
RNN3980 K	400	5.7
RNN3984	420	5.7
RNN3984 K	420	5.7
RNN4022	110	5.7
RNN4022 K	110	5.7
RNN4024	120	5.7
RNN4024 K	120	5.7
RNN4052	260	5.7
RNN4052 K	260	5.7
RNN4836	180	5.7
RNN4836 K	180	5.7
RNN4872	360	5.7
RNN4872 K	360	5.7
RNN49/560	560	5.7
RNN49/560 K	560	5.7
RNN4920	100	5.7
RNN4920 K	100	5.7
RNN4921	105	5.7
RNN4921 K	105	5.7
RNN4922	110	5.7
RNN4922 K	110	5.7
RNN4924	120	5.7
RNN4924 K	120	5.7
RNN4926	130	5.7
RNN4926 K	130	5.7
RNN4928	140	5.7
RNN4928 K	140	5.7
RNN4930	150	5.7
RNN4930 K	150	5.7
RNN4932	160	5.7
RNN4932 K	160	5.7
RNN4934	170	5.7
RNN4934 K	170	5.7
RNN4936	180	5.7
RNN4936 K	180	5.7
RNN4938	190	5.7
RNN4938 K	190	5.7
RNN4940	200	5.7
RNN4940 K	200	5.7
RNN4944	220	5.7
RNN4944 K	220	5.7
RNN4948	240	5.7
RNN4948 K	240	5.7
RNN4952	260	5.7
RNN4952 K	260	5.7
RNN4956	280	5.7

Index	d [mm]	Tab.No
RNN4956 K	280	5.7
RNN4960	300	5.7
RNN4960 K	300	5.7
RNN4964	320	5.7
RNN4964 K	320	5.7
RNN4992	460	5.7
RNN4992 K	460	5.7
RNNU4184	420	5.8
RNNU49/500	500	5.8
RNNU49/500 K	500	5.8
RNNU4920	100	5.8
RNNU4920 K	100	5.8
RNNU4921	105	5.8
RNNU4921 K	105	5.8
RNNU4922	110	5.8
RNNU4922 K	110	5.8
RNNU4924	120	5.8
RNNU4924 K	120	5.8
RNNU4926	130	5.8
RNNU4926 K	130	5.8
RNNU4928	140	5.8
RNNU4928 K	140	5.8
RNNU4930	150	5.8
RNNU4930 K	150	5.8
RNNU4932	160	5.8
RNNU4932 K	160	5.8
RNNU4934	170	5.8
RNNU4934 K	170	5.8
RNNU4936	180	5.8
RNNU4936 K	180	5.8
RNNU4938	190	5.8
RNNU4938 K	190	5.8
RNNU4940	200	5.8
RNNU4940 K	200	5.8
RNNU4944	220	5.8
RNNU4944 K	220	5.8
RNNU4948	240	5.8
RNNU4948 K	240	5.8
RNNU4952	260	5.8
RNNU4952 K	260	5.8
RNNU4956	280	5.8
RNNU4956 K	280	5.8
RNNU4960	300	5.8
RNNU4960 K	300	5.8
RNNU4964	320	5.8
RNNU4964 K	320	5.8
RNNU4968	340	5.8
RNNU4968 K	340	5.8
RNNU4972	360	5.8
RNNU4972 K	360	5.8
RNNU4976	380	5.8
RNNU4976 K	380	5.8
RNNU4980	400	5.8
RNNU4980 K	400	5.8
RNNU4984	420	5.8
RNNU4984 K	420	5.8
RNNU4988	440	5.8
RNNU4988 K	440	5.8
RNNU4992	460	5.8
RNNU4992 K	460	5.8
RNNU4996	480	5.8
RNNU4996 K	480	5.8
RNNU6012	60	5.8
RNNU6013	65	5.8
RNNU6014	70	5.8
RNNU6015	75	5.8
RNNU6016	80	5.8
RNNU6017	85	5.8
RNNU6018	90	5.8
RNNU6019	95	5.8
RNNU6020	100	5.8
RNNU6021	105	5.8
RNNU6022	110	5.8
RNNU6024	120	5.8
RNNU6026	130	5.8
RNNU6028	140	5.8
RNNU6030	150	5.8
RNNU6032	160	5.8
RNNU6034	170	5.8
RNNU6036	180	5.8
RNNU6038	190	5.8
RNNU6040	200	5.8
RNNU6044	220	5.8
RNNU6048	240	5.8
RNNU6052	260	5.8
RNNU6056	280	5.8
RNNU6060	300	5.8
RNNU6064	320	5.8
RNU10/500	500	5.1
RNU10/530	530	5.1

Index	d [mm]	Tab.No
RNU10/560	560	5.1
RNU10/600	600	5.1
RNU10/630	630	5.1
RNU10/670	670	5.1
RNU10/710	710	5.1
RNU10/750	750	5.1
RNU10/800	800	5.1
RNU1005	25	5.1
RNU1006	30	5.1
RNU1007	35	5.1
RNU1008	40	5.1
RNU1009	45	5.1
RNU1010	50	5.1
RNU1011	55	5.1
RNU1012	60	5.1
RNU1013	65	5.1
RNU1014	70	5.1
RNU1015	75	5.1
RNU1016	80	5.1
RNU1017	85	5.1
RNU1018	90	5.1
RNU1019	95	5.1
RNU1020	100	5.1
RNU1021	105	5.1
RNU1022	110	5.1
RNU1024	120	5.1
RNU1026	130	5.1
RNU1028	140	5.1
RNU1030	150	5.1
RNU1032	160	5.1
RNU1034	170	5.1
RNU1036	180	5.1
RNU1038	190	5.1
RNU1040	200	5.1
RNU1044	220	5.1
RNU1048	240	5.1
RNU1052	260	5.1
RNU1056	280	5.1
RNU1060	300	5.1
RNU1064	320	5.1
RNU1068	340	5.1
RNU1072	360	5.1
RNU1076	380	5.1
RNU1080	400	5.1
RNU1084	420	5.1
RNU1088	440	5.1
RNU1092	460	5.1
RNU1096	480	5.1
RNU12/500	500	5.1
RNU12/560	560	5.1
RNU12/630	630	5.1
RNU1292	460	5.1
RNU18/1000	1000	5.1
RNU18/1120	1120	5.1
RNU18/1180	1180	5.1
RNU18/1320	1320	5.1
RNU18/1600	1600	5.1
RNU18/1700	1700	5.1
RNU18/500	500	5.1
RNU18/560	560	5.1
RNU18/600	600	5.1
RNU18/630	630	5.1
RNU18/670	670	5.1
RNU18/710	710	5.1
RNU18/750	750	5.1
RNU18/800	800	5.1
RNU18/900	900	5.1
RNU1864	320	5.1
RNU1872	360	5.1
RNU1876	380	5.1
RNU1880	400	5.1
RNU1884	420	5.1
RNU1896	480	5.1
RNU19/500	500	5.1
RNU19/530	530	5.1
RNU19/560	560	5.1
RNU19/600	600	5.1
RNU19/630	630	5.1
RNU19/670	670	5.1
RNU19/710	710	5.1
RNU19/850	850	5.1
RNU19/900	900	5.1
RNU1920	100	5.1
RNU1921	105	5.1
RNU1926	130	5.1
RNU1928	140	5.1
RNU1932	160	5.1
RNU1938	190	5.1
RNU1940	200	5.1
RNU1944	220	5.1

https://nppnovoteh.com

23. INDEX

Index	d [mm]	Tab.No
RNU1952	260	5.1
RNU1956	280	5.1
RNU1960	300	5.1
RNU1964	320	5.1
RNU1968	340	5.1
RNU1972	360	5.1
RNU1980	400	5.1
RNU1984	420	5.1
RNU1988	440	5.1
RNU1992	460	5.1
RNU1996	480	5.1
RNU2/600	600	5.1
RNU20/500	500	5.1
RNU20/530	530	5.1
RNU20/560	560	5.1
RNU20/600	600	5.1
RNU20/630	630	5.1
RNU20/670	670	5.1
RNU20/710	710	5.1
RNU20/750	750	5.1
RNU20/800	800	5.1
RNU2009	45	5.1
RNU202 E	15	5.1
RNU2026	130	5.1
RNU203 E	17	5.1
RNU2032	160	5.1
RNU2034	170	5.1
RNU204 E	20	5.1
RNU205 E	25	5.1
RNU2056	280	5.1
RNU206 E	30	5.1
RNU2060	300	5.1
RNU2064	320	5.1
RNU207 E	35	5.1
RNU2072	360	5.1
RNU2076	380	5.1
RNU208 E	40	5.1
RNU2080	400	5.1
RNU2084	420	5.1
RNU2088	440	5.1
RNU209 E	45	5.1
RNU2092	460	5.1
RNU2096	480	5.1
RNU210 E	50	5.1
RNU211 E	55	5.1
RNU212 E	60	5.1
RNU213 E	65	5.1
RNU214 E	70	5.1
RNU215 E	75	5.1
RNU216 E	80	5.1
RNU217 E	85	5.1
RNU218 E	90	5.1
RNU219 E	95	5.1
RNU220 E	100	5.1
RNU2203 E	17	5.1
RNU2204 E	20	5.1
RNU2205 E	25	5.1
RNU2206 E	30	5.1
RNU2207 E	35	5.1
RNU2208 E	40	5.1
RNU2209 E	45	5.1
RNU221 E	105	5.1
RNU2210 E	50	5.1
RNU2211 E	55	5.1
RNU2212 E	60	5.1
RNU2213 E	65	5.1
RNU2214 E	70	5.1
RNU2215 E	75	5.1
RNU2216 E	80	5.1
RNU2217 E	85	5.1
RNU2218 E	90	5.1
RNU2219 E	95	5.1
RNU222 E	110	5.1
RNU2220 E	100	5.1
RNU2222 E	110	5.1
RNU2224 E	120	5.1
RNU2226 E	130	5.1
RNU2228 E	140	5.1
RNU2230 E	150	5.1
RNU2232 E	160	5.1
RNU2234 E	170	5.1
RNU2236 E	180	5.1
RNU2238 E	190	5.1
RNU224 E	120	5.1
RNU2240 E	200	5.1
RNU2244 E	220	5.1
RNU2248 E	240	5.1
RNU2252 E	260	5.1
RNU2256 E	280	5.1
RNU226 E	130	5.1

Index	d [mm]	Tab.No
RNU2260	300	5.1
RNU2264	320	5.1
RNU2268	340	5.1
RNU2272	360	5.1
RNU2276	380	5.1
RNU228 E	140	5.1
RNU2292	460	5.1
RNU230 E	150	5.1
RNU2304 E	20	5.1
RNU2305 E	25	5.1
RNU2306 E	30	5.1
RNU2307 E	35	5.1
RNU2308 E	40	5.1
RNU2309 E	45	5.1
RNU2310 E	50	5.1
RNU2311 E	55	5.1
RNU2312 E	60	5.1
RNU2313 E	65	5.1
RNU2314 E	70	5.1
RNU2315 E	75	5.1
RNU2316 E	80	5.1
RNU2317 E	85	5.1
RNU2318 E	90	5.1
RNU2319 E	95	5.1
RNU232 E	160	5.1
RNU2320 E	100	5.1
RNU2322 E	110	5.1
RNU2324 E	120	5.1
RNU2326 E	130	5.1
RNU2328 E	140	5.1
RNU2330 E	150	5.1
RNU2332 E	160	5.1
RNU2334 E	170	5.1
RNU2336 E	180	5.1
RNU2338 E	190	5.1
RNU234 E	170	5.1
RNU2340 E	200	5.1
RNU2344 E	220	5.1
RNU2348 E	240	5.1
RNU2352 E	260	5.1
RNU2356 E	280	5.1
RNU236 E	180	5.1
RNU2360	300	5.1
RNU2372	360	5.1
RNU238 E	190	5.1
RNU240 E	200	5.1
RNU244 E	220	5.1
RNU248 E	240	5.1
RNU252 E	260	5.1
RNU256 E	280	5.1
RNU260 E	300	5.1
RNU264 E	320	5.1
RNU28/1000	1000	5.1
RNU28/500	500	5.1
RNU28/530	530	5.1
RNU28/600	600	5.1
RNU28/630	630	5.1
RNU28/850	850	5.1
RNU28/900	900	5.1
RNU2840	200	5.1
RNU2860	300	5.1
RNU2864	320	5.1
RNU2868	340	5.1
RNU2888	440	5.1
RNU2892	460	5.1
RNU2896	480	5.1
RNU29/1000	1000	5.1
RNU29/1060	1060	5.1
RNU29/1180	1180	5.1
RNU29/1320	1320	5.1
RNU29/500	500	5.1
RNU29/530	530	5.1
RNU29/560	560	5.1
RNU29/600	600	5.1
RNU29/630	630	5.1
RNU29/710	710	5.1
RNU29/900	900	5.1
RNU29/950	950	5.1
RNU2924	120	5.1
RNU2926	130	5.1
RNU2928	140	5.1
RNU2932	160	5.1
RNU2944	220	5.1
RNU2952	260	5.1
RNU2968	340	5.1
RNU2972	360	5.1
RNU2984	420	5.1
RNU2988	440	5.1
RNU2992	460	5.1
RNU2996	480	5.1

Index	d [mm]	Tab.No
RNU30/1120	1120	5.1
RNU30/500	500	5.1
RNU30/530 E	530	5.1
RNU30/600	600	5.1
RNU30/630	630	5.1
RNU30/670	670	5.1
RNU3013	65	5.1
RNU302 E	15	5.1
RNU303 E	17	5.1
RNU3030	150	5.1
RNU3034	170	5.1
RNU3036	180	5.1
RNU3038	190	5.1
RNU304 E	20	5.1
RNU3040	200	5.1
RNU3048	240	5.1
RNU305 E	25	5.1
RNU3052	260	5.1
RNU306 E	30	5.1
RNU3060	300	5.1
RNU3064	320	5.1
RNU3068	340	5.1
RNU307 E	35	5.1
RNU3072	360	5.1
RNU3076	380	5.1
RNU308 E	40	5.1
RNU3080	400	5.1
RNU3084	420	5.1
RNU309 E	45	5.1
RNU3092	460	5.1
RNU3096	480	5.1
RNU31/500	500	5.1
RNU31/530	530	5.1
RNU31/560	560	5.1
RNU310 E	50	5.1
RNU311 E	55	5.1
RNU312 E	60	5.1
RNU313 E	65	5.1
RNU3132	160	5.1
RNU3138	190	5.1
RNU314 E	70	5.1
RNU3144	220	5.1
RNU315 E	75	5.1
RNU3152	260	5.1
RNU3156	280	5.1
RNU316 E	80	5.1
RNU3160	300	5.1
RNU3164	320	5.1
RNU3168	340	5.1
RNU317 E	85	5.1
RNU3172	360	5.1
RNU318 E	90	5.1
RNU3184	420	5.1
RNU3188	440	5.1
RNU319 E	95	5.1
RNU3192	460	5.1
RNU3196	480	5.1
RNU320 E	100	5.1
RNU3206	30	5.1
RNU3207	35	5.1
RNU3208	40	5.1
RNU3209	45	5.1
RNU321 E	105	5.1
RNU3210	50	5.1
RNU3211	55	5.1
RNU3212	60	5.1
RNU3213	65	5.1
RNU3214	70	5.1
RNU3215	75	5.1
RNU3216	80	5.1
RNU3217	85	5.1
RNU3218	90	5.1
RNU3219	95	5.1
RNU322 E	110	5.1
RNU3220	100	5.1
RNU3221	105	5.1
RNU3222	110	5.1
RNU3224	120	5.1
RNU3226	130	5.1
RNU3228	140	5.1
RNU3230	150	5.1
RNU3232	160	5.1
RNU3234	170	5.1
RNU3236	180	5.1
RNU3238	190	5.1
RNU324 E	120	5.1
RNU3240	200	5.1
RNU3244	220	5.1
RNU3248	240	5.1
RNU3252	260	5.1

Index	d [mm]	Tab.No
RNU326 E	130	5.1
RNU328 E	140	5.1
RNU330 E	150	5.1
RNU3306	30	5.1
RNU3307	35	5.1
RNU3308	40	5.1
RNU3309	45	5.1
RNU3310	50	5.1
RNU3311	55	5.1
RNU3312	60	5.1
RNU3313	65	5.1
RNU3314	70	5.1
RNU3315	75	5.1
RNU3316	80	5.1
RNU3317	85	5.1
RNU3318	90	5.1
RNU3319	95	5.1
RNU332 E	160	5.1
RNU3320	100	5.1
RNU3321	105	5.1
RNU3322	110	5.1
RNU3324	120	5.1
RNU3326	130	5.1
RNU3328	140	5.1
RNU3330	150	5.1
RNU3332	160	5.1
RNU3334	170	5.1
RNU3336	180	5.1
RNU3338	190	5.1
RNU334 E	170	5.1
RNU3340	200	5.1
RNU3344	220	5.1
RNU3348	240	5.1
RNU3352	260	5.1
RNU336 E	180	5.1
RNU338 E	190	5.1
RNU340 E	200	5.1
RNU344 E	220	5.1
RNU348 E	240	5.1
RNU352 E	260	5.1
RNU356 E	280	5.1
RNU364	320	5.1
RNU38/500	500	5.1
RNU38/950	950	5.1
RNU3856	280	5.1
RNU3860	300	5.1
RNU3868	340	5.1
RNU3876	380	5.1
RNU3880	400	5.1
RNU3884	420	5.1
RNU39/1060	1060	5.1
RNU39/500	500	5.1
RNU3988	440	5.1
RNU406	30	5.1
RNU407	35	5.1
RNU408	40	5.1
RNU409	45	5.1
RNU410	50	5.1
RNU411	55	5.1
RNU412	60	5.1
RNU413	65	5.1
RNU414	70	5.1
RNU415	75	5.1
RNU416	80	5.1
RNU417	85	5.1
RNU418	90	5.1
RNU419	95	5.1
RNU420	100	5.1
RNU421	105	5.1
RNU422	110	5.1
RNU424	120	5.1
RNU426	130	5.1
RNU428	140	5.1
RNU430	150	5.1
RNU436	180	5.1
RNU5208	40	5.1
RNU5209	45	5.1
RNU5210	50	5.1
RNU5211	55	5.1
RNU5212	60	5.1
RNU5213	65	5.1
RNU5214	70	5.1
RNU5215	75	5.1
RNU5216	80	5.1
RNU5217	85	5.1
RNU5218	90	5.1
RNU5219	95	5.1
RNU5220	100	5.1
RNU5221	105	5.1
RNU5222	110	5.1

Index	d [mm]	Tab.No
RNU5224	120	5.1
RNU5226	130	5.1
RNU5228	140	5.1
RNU5230	150	5.1
RNU5232	160	5.1
RNU5234	170	5.1
RPNA 15/28	15	6.5
RPNA 18/32	18	6.5
RPNA 20/35	20	6.5
RPNA 25/42	25	6.5
RPNA 28/44	28	6.5
RPNA 30/47	30	6.5
RPNA 35/52	35	6.5
RPNA 40/55	40	6.5
RPNA 45/62	45	6.5
RSTO 05	7	13.3
RSTO 06	10	13.3
RSTO 08	12	13.3
RSTO 10	14	13.3
RSTO 12	16	13.3
RSTO 15	20	13.3
RSTO 17	22	13.3
RSTO 20	25	13.3
RSTO 25	30	13.3
RSTO 30	38	13.3
RSTO 35	42	13.3
RSTO 40	50	13.3
RSTO 45	55	13.3
RSTO 50	60	13.3
SA 05	5	17.3
SA 06	6	17.3
SA 08	8	17.3
SA 10	10	17.3
SA 12	12	17.3
SA 14	14	17.3
SA 16	16	17.3
SA 18	18	17.3
SA 20	20	17.3
SA 22	22	17.3
SA 25	25	17.3
SA 30	30	17.3
SA 35	35	17.3
SA201	12	14.2
SA202	15	14.2
SA203	17	14.2
SA204	20	14.2
SA205	25	14.2
SA206	30	14.2
SA207	35	14.2
SA208	40	14.2
SA209	45	14.2
SA210	50	14.2
SA211	55	14.2
SA212	60	14.2
SAL 05	5	17.3
SAL 06	6	17.3
SAL 08	8	17.3
SAL 10	10	17.3
SAL 12	12	17.3
SAL 14	14	17.3
SAL 16	16	17.3
SAL 18	18	17.3
SAL 20	20	17.3
SAL 22	22	17.3
SAL 25	25	17.3
SAL 30	30	17.3
SAL 35	35	17.3
SB.AC100143.	100	21.1
SB.AC101,6114.	101,6	21.1
SB.AC101,6127.	101,6	21.1
SB.AC101140.	101	21.1
SB.AC109160.	109	21.1
SB.AC110175.1	110	21.1
SB.AC110175.2	110	21.1
SB.AC115145.	115	21.1
SB.AC130205.	130	21.1
SB.AC140215.	140	21.1
SB.AC1638,1.	16	21.1
SB.AC165,1190.	165,1	21.1
SB.AC188221.	188	21.1
SB.AC188232.	188	21.1
SB.AC195225.	195	21.1
SB.AC200228.	200	21.1
SB.AC200240.	200	21.1
SB.AC200270.	200	21.1
SB.AC203,2222.	203,2	21.1
SB.AC2050.1	20	21.1
SB.AC2050.2	20	21.1
SB.AC205270.	205	21.1
SB.AC21,834,5.	21,8	21.1

https://nppnovoteh.com

Index	d [mm]	Tab.No
SB.AC21,848.	21,8	21.1
SB.AC228,6254.	228,6	21.1
SB.AC2552.	25	21.1
SB.AC2568.	25	21.1
SB.AC279,4368.	279,4	21.1
SB.AC3062.	30	21.1
SB.AC3075.	30	21.1
SB.AC31,861,9.	31,75	21.1
SB.AC31,869,9.	31,75	21.1
SB.AC3292.1	32	21.1
SB.AC3292.2	32	21.1
SB.AC3464.	34	21.1
SB.AC355,6393.	355,6	21.1
SB.AC3568.	35	21.1
SB.AC3572.1	35	21.1
SB.AC3572.2	35	21.1
SB.AC3672.	36	21.1
SB.AC40110.	40	21.1
SB.AC4076.	40	21.1
SB.AC4080.1	40	21.1
SB.AC4080.2	40	21.1
SB.AC4080.3	40	21.1
SB.AC4080.4	40	21.1
SB.AC50116.	50	21.1
SB.AC57,2120,7.	57,15	21.1
SB.AC69,9120,7.	69,85	21.1
SB.AC720907.	720	21.1
SB.AC76,288,9.	76,2	21.1
SB.BA0315.	3	21.1
SB.BA0519.	5	21.1
SB.BA0523.	5	21.1
SB.BA0525.	5	21.1
SB.BA0619.1	6	21.1
SB.BA0619.2	6	21.1
SB.BA0722.	7,01	21.1
SB.BA0724.	7	21.1
SB.BA08,121.1	8,1	21.1
SB.BA08,121.10	8,1	21.1
SB.BA08,121.11	8,1	21.1
SB.BA08,121.12	8,1	21.1
SB.BA08,121.13	8,1	21.1
SB.BA08,121.14	8,1	21.1
SB.BA08,121.2	8,1	21.1
SB.BA08,121.3	8,1	21.1
SB.BA08,121.4	8,1	21.1
SB.BA08,121.5	8,1	21.1
SB.BA08,121.6	8,1	21.1
SB.BA08,121.7	8,1	21.1
SB.BA08,121.8	8,1	21.1
SB.BA08,121.9	8,1	21.1
SB.BA08,140.	8,1	21.1
SB.BA0812/12.	8	21.1
SB.BA0822.	8	21.1
SB.BA0822.1	8	21.1
SB.BA0822.2	8	21.1
SB.BA0822.3	8	21.1
SB.BA0822.4	8	21.1
SB.BA0822.5	8	21.1
SB.BA0822/12.	8	21.1
SB.BA0824.	8	21.1
SB.BA0826.	8	21.1
SB.BA0828.	8	21.1
SB.BA0932.	9	21.1
SB.BA100130.	100	21.1
SB.BA1022.1	10	21.1
SB.BA1022.10	10	21.1
SB.BA1022.2	10	21.1
SB.BA1022.3	10	21.1
SB.BA1022.4	10	21.1
SB.BA1022.5	10	21.1
SB.BA1022.6	10	21.1
SB.BA1022.7	10	21.1
SB.BA1022.8	10	21.1
SB.BA1022.9	10	21.1
SB.BA1026.	10	21.1
SB.BA1030.1	10	21.1
SB.BA1030.2	10	21.1
SB.BA1030.3	10	21.1
SB.BA1030.4	10	21.1
SB.BA1032.	10	21.1
SB.BA115145.	115	21.1
SB.BA12,138.	12,05	21.1
SB.BA12,234.	12,2	21.1
SB.BA12,728,6.	12,7	21.1
SB.BA1225.1	12	21.1
SB.BA1225.2	12	21.1
SB.BA1225.3	12	21.1
SB.BA1228.	12	21.1
SB.BA1232.1	12	21.1
SB.BA1232.2	12	21.1

Index	d [mm]	Tab.No
SB.BA123201.	12	21.1
SB.BA123202.	12	21.1
SB.BA1235.	12	21.1
SB.BA1237.	12	21.1
SB.BA123702.	12	21.1
SB.BA1238.	12	21.1
SB.BA1241.	12	21.1
SB.BA1245.	12	21.1
SB.BA1329.	13	21.1
SB.BA1431.	14	21.1
SB.BA15,928.1	15,9	21.1
SB.BA15,928.2	15,9	21.1
SB.BA15,928.3	15,9	21.1
SB.BA15,930.1	15,9	21.1
SB.BA15,930.10	15,918	21.1
SB.BA15,930.11	15,918	21.1
SB.BA15,930.2	15,918	21.1
SB.BA15,930.3	15,918	21.1
SB.BA15,930.4	15,918	21.1
SB.BA15,930.5	15,918	21.1
SB.BA15,930.6	15,918	21.1
SB.BA15,930.7	15,918	21.1
SB.BA15,930.8	15,918	21.1
SB.BA15,930.9	15,918	21.1
SB.BA15,935.	15,875	21.1
SB.BA150215.	150	21.1
SB.BA1530.	15,008	21.1
SB.BA1535.2	15	21.1
SB.BA1535.3	15	21.1
SB.BA153503.	15	21.1
SB.BA1540.1	15	21.1
SB.BA1540.2	15	21.1
SB.BA155250.	155	21.1
SB.BA1630.	16	21.1
SB.BA1630.1	16	21.1
SB.BA1630.10	16	21.1
SB.BA1630.11	16	21.1
SB.BA1630.12	16	21.1
SB.BA1630.13	16	21.1
SB.BA1630.2	16	21.1
SB.BA1630.3	16	21.1
SB.BA1630.4	16	21.1
SB.BA1630.5	16	21.1
SB.BA1630.6	16	21.1
SB.BA1630.7	16	21.1
SB.BA1630.8	16	21.1
SB.BA1630.9	16	21.1
SB.BA1635.	16	21.1
SB.BA1638.	16	21.1
SB.BA165250,5.	165	21.1
SB.BA1726.	17	21.1
SB.BA1735.1	17	21.1
SB.BA1735.2	17	21.1
SB.BA1735.3	17	21.1
SB.BA1740.	17	21.1
SB.BA1747.	17	21.1
SB.BA1750.	17	21.1
SB.BA1847.	18	21.1
SB.BA19,130,2.	19,05	21.1
SB.BA20,236,3.1	20,2	21.1
SB.BA20,236,3.2	20,2	21.1
SB.BA2030,2.1	20	21.1
SB.BA2030,2.2	20	21.1
SB.BA2047.1	20	21.1
SB.BA2047.2	20	21.1
SB.BA2047.3	20	21.1
SB.BA2047.4	20	21.1
SB.BA2047.5	20	21.1
SB.BA2052.1	20	21.1
SB.BA2052.2	20	21.1
SB.BA22,236,9.1	22,2	21.1
SB.BA22,236,9.2	22,2	21.1
SB.BA22,335,8.	22,25	21.1
SB.BA22,556.	22,5	21.1
SB.BA2252.1	22	21.1
SB.BA2252.2	22	21.1
SB.BA25,450,8.	25,4	21.1
SB.BA25,846,2.	25,8	21.1
SB.BA2547.	25	21.1
SB.BA2552.1	25	21.1
SB.BA2552.1	25	21.1
SB.BA2552.2	25	21.1
SB.BA2552.2	25	21.1
SB.BA2554,4.1	25	21.1
SB.BA2554,4.2	25	21.1
SB.BA2555.1	25	21.1
SB.BA2555.2	25	21.1
SB.BA2555.3	25	21.1
SB.BA2562.1	25	21.1
SB.BA2562.2	25	21.1

Index	d [mm]	Tab.No
SB.BA2562.3	25	21.1
SB.BA2562.4	25	21.1
SB.BA2565,5.	25	21.1
SB.BA2575.	25	21.1
SB.BA26,440,6.	26,4	21.1
SB.BA2741.	27	21.1
SB.BA28,671,4.1	28,575	21.1
SB.BA28,671,4.2	28,58	21.1
SB.BA28,671,4.3	28,58	21.1
SB.BA280335.	280	21.1
SB.BA2847.1	28	21.1
SB.BA2867.2	28	21.1
SB.BA2868.	28	21.1
SB.BA29,553.	29,5	21.1
SB.BA29,662.	29,578	21.1
SB.BA30,753.	30,7	21.1
SB.BA30,955.	30,9	21.1
SB.BA3049,3.1	30	21.1
SB.BA3049,3.2	30	21.1
SB.BA3055.1	30	21.1
SB.BA3055.2	30	21.1
SB.BA3055.3	30	21.1
SB.BA3062.1	30	21.1
SB.BA3062.1	30	21.1
SB.BA3062.2	30	21.1
SB.BA3062.2	30	21.1
SB.BA3065.1	30	21.1
SB.BA3065.2	30	21.1
SB.BA3072.	30	21.1
SB.BA3074,2.	30	21.1
SB.BA3075.	30	21.1
SB.BA31,879,4.	31,755	21.1
SB.BA32,957,2.	32,89	21.1
SB.BA3249.	32	21.1
SB.BA3264.	32	21.1
SB.BA3267.	32	21.1
SB.BA330390.	330	21.1
SB.BA35,962.	35,9	21.1
SB.BA35101,5.	35	21.1
SB.BA3553,6.	35	21.1
SB.BA3568.	35	21.1
SB.BA3572.1	35	21.1
SB.BA3572.2	35	21.1
SB.BA3572.3	35	21.1
SB.BA3572.4	35	21.1
SB.BA3580.1	35	21.1
SB.BA3580.2	35	21.1
SB.BA3585.	35	21.1
SB.BA3590.2	35	21.1
SB.BA3593,5.	35	21.1
SB.BA3596,3.	35	21.1
SB.BA3597.	35	21.1
SB.BA36,473,1.	36,373	21.1
SB.BA360440.	360	21.1
SB.BA3762.1	37	21.1
SB.BA3762.2	37	21.1
SB.BA38,980.1	38,89	21.1
SB.BA38,980.2	38,89	21.1
SB.BA380440.	380	21.1
SB.BA40,561.	40,5	21.1
SB.BA4080.	40	21.1
SB.BA4090.1	40	21.1
SB.BA4090.2	40	21.1
SB.BA4090.3	40	21.1
SB.BA4376.	43	21.1
SB.BA450520.	450	21.1
SB.BA45100.	45	21.1
SB.BA50,690.	50,6	21.1
SB.BA5081,5.	50	21.1
SB.BA5081,6.	50	21.1
SB.BA5082,5.	50	21.1
SB.BA52,485.	52,388	21.1
SB.BA52,491,6.	52,4	21.1
SB.BA55100.	55	21.1
SB.BA63,5100.	63,505	21.1
SB.BA65100.	65	21.1
SB.BA75117.	75	21.1
SB.BA80125.	80	21.1
SB.CA1640.	(-)	21.1
SB.CA1847.	(-)	21.1
SB.CA1952.	(-)	21.1
SB.CA2044.	(-)	21.1
SB.CA2250,2.	(-)	21.1
SB.CA2254,8.	(-)	21.1
SB.CA2254.	(-)	21.1
SB.CA2255.	(-)	21.1
SB.CA2257.	(-)	21.1
SB.CA2259.	(-)	21.1
SB.CA2263,9.	(-)	21.1
SB.CA2267,1.	(-)	21.1

Index	d [mm]	Tab.No
SB.CA2439,3/59.	(-)	21.1
SB.CA2461,3.	(-)	21.1
SB.CA2461.	(-)	21.1
SB.CA2462,5.	(-)	21.1
SB.CA2462.	(-)	21.1
SB.CA2475.	(-)	21.1
SB.CA25,443,7/65.	(-)	21.1
SB.CA2669,8.	(-)	21.1
SB.CA2672.	(-)	21.1
SB.CA2774,6.	(-)	21.1
SB.CA2775.	(-)	21.1
SB.CA2781,7.	(-)	21.1
SB.CA2782.	(-)	21.1
SB.CA2871.	(-)	21.1
SB.CA2875,5.	(-)	21.1
SB.CA30,2106,3	(-)	21.1
SB.CA30,282.	(-)	21.1
SB.CA30,292.	(-)	21.1
SB.CA30108.	(-)	21.1
SB.CA3042/75.	(-)	21.1
SB.CA3055/88	(-)	21.1
SB.CA3075.	(-)	21.1
SB.CA3082.	(-)	21.1
SB.CA3088.	(-)	21.1
SB.CA3090.	(-)	21.1
SB.CA3091,5.	(-)	21.1
SB.CA3092.	(-)	21.1
SB.CA3148/75,5	(-)	21.1
SB.CA3187.	(-)	21.1
SB.CA3276.	(-)	21.1
SB.CA3290,5.	(-)	21.1
SB.CA34,9106,4.	(-)	21.1
SB.CA3590.	(-)	21.1
SB.CA3596,8.	(-)	21.1
SB.CA3597,5.	(-)	21.1
SB.CA3598.	(-)	21.1
SB.CA3689.	(-)	21.1
SB.CA38103.	(-)	21.1
SB.CA38105,8.	(-)	21.1
SB.CA38106,6.	(-)	21.1
SB.CA38107.	(-)	21.1
SB.CA38111,6.	(-)	21.1
SB.CA3862/100.	(-)	21.1
SB.CA39,7115,9.	(-)	21.1
SB.CA39116,4.	(-)	21.1
SB.CA40110.	(-)	21.1
SB.CA40115.	(-)	21.1
SB.CA42104,5.	(-)	21.1
SB.CA42106.	(-)	21.1
SB.CA42119,4.	(-)	21.1
SB.CA44121,6.	(-)	21.1
SB.CA44124,8.	(-)	21.1
SB.CA44149.	(-)	21.1
SB.CA45126,2.	(-)	21.1
SB.CA47,6135.	(-)	21.1
SB.CA47132.	(-)	21.1
SB.CA47156.	(-)	21.1
SB.CA48116,5.	(-)	21.1
SB.CA48126.	(-)	21.1
SB.CA49,2154,7.	(-)	21.1
SB.CA49135.	(-)	21.1
SB.CA49155.	(-)	21.1
SB.CA50131.	(-)	21.1
SB.CA50138.	(-)	21.1
SB.CA50144.	(-)	21.1
SB.CA50149.	(-)	21.1
SB.CA50152,6.	(-)	21.1
SB.CA50152.	(-)	21.1
SB.CA52133.	(-)	21.1
SB.CA52147,2.	(-)	21.1
SB.CA52154.	(-)	21.1
SB.CA53135.	(-)	21.1
SB.CA55164.	(-)	21.1
SB.CA57152,6.	(-)	21.1
SB.CA57152.	(-)	21.1
SB.CA57164.	(-)	21.1
SB.CA57172.	(-)	21.1
SB.NE100180.	100	21.1
SB.NE1016.	10	21.1
SB.NE11,639,6.	11,6	21.1
SB.NE14,723,8.	14,733	21.1
SB.NE16,330.	16,3	21.1
SB.NE1730.	17	21.1
SB.NE19,325,3.	19,3	21.1
SB.NE2332.	23	21.1
SB.NE2552.	25	21.1
SB.NE27,540.	27,5	21.1
SB.NE2740.	27,004	21.1
SB.NE28,644.	28,608	21.1
SB.NE5078.	50	21.1

Index	d [mm]	Tab.No
SB.NE6585.	65	21.1
SB.RO100180.	100	21.1
SB.RO101,6152.	101,613	21.1
SB.RO101,6165.	101,6	21.1
SB.RO101165.1	101	21.1
SB.RO101165.2	101	21.1
SB.RO105165.1	105	21.1
SB.RO105165.2	105	21.1
SB.RO105165.3	105	21.1
SB.RO110290.	110	21.1
SB.RO112170.	112	21.1
SB.RO11601600.	1160	21.1
SB.RO11771600.	1177	21.1
SB.RO118240.	118	21.1
SB.RO120240.	120	21.1
SB.RO120260.	120	21.1
SB.RO12311600.	1231	21.1
SB.RO126,9196.	126,911	21.1
SB.RO12701620.1	1270	21.1
SB.RO12701620.2	1270	21.1
SB.RO127184,2.1	127	21.1
SB.RO127184,2.2	127	21.1
SB.RO130230.	130	21.1
SB.RO130240.1	130	21.1
SB.RO130240.2	130	21.1
SB.RO130240.3	130	21.1
SB.RO130250.	130	21.1
SB.RO140220.	140	21.1
SB.RO141,2206.	141,23	21.1
SB.RO14301800.	1430	21.1
SB.RO14301808.	1430	21.1
SB.RO14951792.	1495	21.1
SB.RO1497.	14	21.1
SB.RO15,950,8.	15,875	21.1
SB.RO150230.	150	21.1
SB.RO160300.	160	21.1
SB.RO16102025.	1610	21.1
SB.RO16102030.	1610	21.1
SB.RO170250.	170	21.1
SB.RO170280.	170	21.1
SB.RO17762195.	1776	21.1
SB.RO180520.	180	21.1
SB.RO190320.	190	21.1
SB.RO200260.	200	21.1
SB.RO200360.	200	21.1
SB.RO2052.	20	21.1
SB.RO205280.	205	21.1
SB.RO2056.	20	21.1
SB.RO20952420.	2095	21.1
SB.RO21002290.	2100	21.1
SB.RO220300.	220	21.1
SB.RO220350.	220	21.1
SB.RO2247.1	22	21.1
SB.RO2247.2	22	21.1
SB.RO23752801.	2375	21.1
SB.RO250365.	250	21.1
SB.RO2537.	25	21.1
SB.RO2552.	25	21.1
SB.RO2555.	25	21.1
SB.RO260540.	260	21.1
SB.RO27,552.	27,5	21.1
SB.RO280400.	280	21.1
SB.RO29303440.	2930	21.1
SB.RO300475.	300	21.1
SB.RO300480.	300	21.1
SB.RO303150.	303	21.1
SB.RO3060.	30	21.1
SB.RO3061,9.1	30	21.1
SB.RO3061,9.2	30	21.1
SB.RO3080.	30	21.1
SB.RO320400.	320	21.1
SB.RO320480.	320	21.1
SB.RO340460.1	340	21.1
SB.RO340460.2	340	21.1
SB.RO340530.	340	21.1
SB.RO340550.	340	21.1
SB.RO350868,5.	350	21.1
SB.RO3560.	35	21.1
SB.RO3568.	35	21.1
SB.RO3590.1	35	21.1
SB.RO365435.	365	21.1
SB.RO390505.	390	21.1
SB.RO400560.	400	21.1
SB.RO4060.1	40	21.1
SB.RO4060.2	40	21.1
SB.RO4065.	40	21.1
SB.RO4095.	40	21.1
SB.RO4165.	41	21.1
SB.RO440600.	440	21.1
SB.RO455555.	455	21.1

https://nppnovoteh.com

23. INDEX

Index	d [mm]	Tab.No
SB.RO457,2685.	457,2	21.1
SB.RO460540.	460	21.1
SB.RO4766.	47	21.1
SB.RO4767.	47	21.1
SB.RO49,980.	49,93	21.1
SB.RO500620.	500	21.1
SB.RO527635.	527	21.1
SB.RO530710.	530	21.1
SB.RO55110.	55	21.1
SB.RO57,2114,3.	57,15	21.1
SB.RO6401082,5.	640	21.1
SB.RO640868.	640	21.1
SB.RO65105.	65	21.1
SB.RO670780.	670	21.1
SB.RO710950.	710	21.1
SB.RO715935.	715	21.1
SB.RO715979.1	715	21.1
SB.RO715979.2	715	21.1
SB.RO715979.3	715	21.1
SB.RO72190.	72	21.1
SB.RO7801340,5.	780	21.1
SB.RO85180.	85	21.1
SB.RO8681144.1	868	21.1
SB.RO8681144.2	868	21.1
SB.RO8681144.3	868	21.1
SB.RO88,9133,4.	88,913	21.1
SB.RO8801220.	880	21.1
SB.RO9051025.	905	21.1
SB.RO95170.	95	21.1
SB.RO9631365.	963	21.1
SB.RO9701344.	970	21.1
SB.RO9741365.	974	21.1
SB.RT105005.	10	21.1
SB.RT12,271,4.1	12,2	21.1
SB.RT12,271,4.2	12,2	21.1
SB.RT12,271,4.3	12,2	21.1
SB.RT1256.	12	21.1
SB.RT1275.1	12	21.1
SB.RT1275.2	12	21.1
SB.RT13,120.	13,1	21.1
SB.RT14,163.1	14,05	21.1
SB.RT14,163.2	14,05	21.1
SB.RT1449,9.1	14	21.1
SB.RT1449,9.2	14	21.1
SB.RT15,525.	15,54	21.1
SB.RT16,176.1	16,05	21.1
SB.RT16,176.2	16,05	21.1
SB.RT1652.	16	21.1
SB.RT1659.1	16	21.1
SB.RT1659.2	16	21.1
SB.RT1935.	19	21.1
SB.RT2079,9.1	20	21.1
SB.RT2079,9.2	20	21.1
SB.RT2080.1	20	21.1
SB.RT2080.2	20	21.1
SB.RT2080.3	20	21.1
SB.RT2080.4	20	21.1
SB.RT2380.	23	21.1
SB.RT2381,9.1	23	21.1
SB.RT2381,9.2	23	21.1
SB.RT2383.	23	21.1
SB.RT25,4125,4.	25,4	21.1
SB.RT25,482,5.1	25,4	21.1
SB.RT25,482,5.2	25,4	21.1
SB.RT28134.1	28	21.1
SB.RT28134.2	28	21.1
SB.RT3084.	30	21.1
SB.RT35101,7.	35	21.1
SB.SR190380.	190	21.1
SB.SR75186,3.	75	21.1
SB.TA100160.	100	21.1
SB.TA108158,8.	107,95	21.1
SB.TA110180.	110	21.1
SB.TA127206,4.	127	21.1
SB.TA127235.	127	21.1
SB.TA140240.	140	21.1
SB.TA1494.	14	21.1
SB.TA1497.	14	21.1
SB.TA1535.	15	21.1
SB.TA1535.1	15	21.1
SB.TA1542.	15	21.1
SB.TA165260.	165	21.1
SB.TA19,142,2.3	19,05	21.1
SB.TA1939.	19	21.1
SB.TA200312.	200	21.1
SB.TA203,2360.	203,2	21.1
SB.TA2042.	20	21.1
SB.TA2043.	20	21.1
SB.TA2162.	21	21.1
SB.TA220342.	220	21.1
SB.TA220400.	220	21.1
SB.TA2241.	22	21.1
SB.TA225385.	225	21.1
SB.TA228,6355.	228,6	21.1
SB.TA23,857,2.	23,813	21.1
SB.TA2352.	23	21.1
SB.TA240320.	240	21.1
SB.TA244,5381.	244,475	21.1
SB.TA25,450,3.	25,4	21.1
SB.TA25,459,5.	25,4	21.1
SB.TA254431,8.	254	21.1
SB.TA2565,5.	25	21.1
SB.TA2652.	26	21.1
SB.TA2657,2.	26	21.1
SB.TA2657.	26	21.1
SB.TA2750,3.	26,988	21.1
SB.TA2750,3.1	27	21.1
SB.TA2750,3.2	27	21.1
SB.TA279420.	279	21.1
SB.TA29,147,5.	29,116	21.1
SB.TA29,147.	29,116	21.1
SB.TA30,264,3.	30,162	21.1
SB.TA304,9412.	304,902	21.1
SB.TA3055.	30	21.1
SB.TA3060.	30	21.1
SB.TA3062.	30	21.1
SB.TA31,859,1.1	31,75	21.1
SB.TA31,859,1.2	31,75	21.1
SB.TA31,859,1.3	31,75	21.1
SB.TA31,873.	31,75	21.1
SB.TA320480.	320	21.1
SB.TA33,349,2.	33,297	21.1
SB.TA33,357.	33,297	21.1
SB.TA33,376,2.	33,338	21.1
SB.TA3349,2.	33,02	21.1
SB.TA3358.	33,02	21.1
SB.TA34,960.	34,925	21.1
SB.TA34,965,1.	34,925	21.1
SB.TA34,973.1	34,925	21.1
SB.TA34,973.2	34,925	21.1
SB.TA34,976,2.	34,925	21.1
SB.TA346,1489.	346,075	21.1
SB.TA3559,1.	34,988	21.1
SB.TA3560.	35	21.1
SB.TA3580.	35	21.1
SB.TA3668.	36	21.1
SB.TA3690.	36	21.1
SB.TA38,165,1.1	38,1	21.1
SB.TA38,165,1.2	38,113	21.1
SB.TA381,1479.	381,05	21.1
SB.TA3863.	38	21.1
SB.TA3964.	39	21.1
SB.TA3973.	39	21.1
SB.TA400540.	400	21.1
SB.TA4070.	40	21.1
SB.TA4073.	40	21.1
SB.TA4090.1	40	21.1
SB.TA4090.2	40	21.1
SB.TA41,373,4.1	41,275	21.1
SB.TA41,373,4.2	41,275	21.1
SB.TA41,382,6.	41,275	21.1
SB.TA431,8571.1	431,8	21.1
SB.TA431,8571.2	431,8	21.1
SB.TA44,582,9.	44,45	21.1
SB.TA44,587,3.	44,45	21.1
SB.TA44,595,3.1	44,45	21.1
SB.TA44,595,3.2	44,45	21.1
SB.TA45,682,9.	45,618	21.1
SB.TA4580.	45	21.1
SB.TA4675.	46	21.1
SB.TA47,696,8.	47,625	21.1
SB.TA50,8100.	50,8	21.1
SB.TA50,8101,6.	50,8	21.1
SB.TA50,8104,8.	50,8	21.1
SB.TA50,895,3.	50,8	21.1
SB.TA5090.	50	21.1
SB.TA530780.	530	21.1
SB.TA57,2104,8.	57,15	21.1
SB.TA5785.	57	21.1
SB.TA60127.	60	21.1
SB.TA60135.	60	21.1
SB.TA609,8762.	609,8	21.1
SB.TA620800.	620	21.1
SB.TA63,595.	63,5	21.1
SB.TA65120.	65	21.1
SB.TA6595.	65	21.1
SB.TA66,7110.	66,675	21.1
SB.TA66,7112,7.	66,675	21.1
SB.TA70110.	70	21.1
SB.TA70136,5.	70	21.1
SB.TA73112,7.	73,025	21.1
SB.TA76,2136,5.	76,2	21.1
SB.TA79,4150,1.	79,375	21.1
SB.TA80160.	80	21.1
SB.TA82,6125,4.	82,55	21.1
SB.TA88,9152,4.	88,9	21.1
SB.TA95,3157,2.	95,25	21.1
SB.TA95,3171,5.	95,25	21.1
SB.TA96,8148,4.	96,838	21.1
SB.TB09,526,7.1	9,52	21.1
SB.TB09,526,7.2	9,52	21.1
SB.TB110230.	110	21.1
SB.TB110260.	110	21.1
SB.TB12,732,3.1	12,7	21.1
SB.TB12,732,3.2	12,7	21.1
SB.TB1242.	12	21.1
SB.TB14,236,6.	14,15	21.1
SB.TB16,226,5.	16,2	21.1
SB.TB19,142,2.1	19,05	21.1
SB.TB19,142,2.2	19,05	21.1
SB.TB19,241,5.	19,228	21.1
SB.TB25,149,5.	25,1	21.1
SB.TB2546.	25	21.1
SB.TB26,246,6.	26,24	21.1
SB.TB26,268.	26,2	21.1
SB.TB330410.	330	21.1
SB.TB38,466.	38,35	21.1
SB.TB400560.	400	21.1
SB.TB433520.	433	21.1
SB.TB4575,5.1	45	21.1
SB.TB4575,5.2	45	21.1
SB.TB482,6584.	482,6	21.1
SB.TB500600.	500	21.1
SB.TB52,484,5.	52,388	21.1
SB.TB550650.	550	21.1
SB.TB585680.	585	21.1
SB.TB600710.	600	21.1
SB.TB6295.	62	21.1
SB.TB70105.	70	21.1
SB.TB7101100.	710	21.1
SB.TB730865.1	730	21.1
SB.TB730865.2	730	21.1
SB.TB740980.	740	21.1
SB.TB78110.	78	21.1
SB.TB90145.	90	21.1
SB.XX220300.	220	21.1
SB201	12	14.4
SB202	15	14.4
SB203	17	14.4
SB204	20	14.4
SB205	25	14.4
SB206	30	14.4
SB207	35	14.4
SB208	40	14.4
SB209	45	14.4
SB210	50	14.4
SB211	55	14.4
SB212	60	14.4
SEG W 006	6	19.1
SEG W 007	7	19.1
SEG W 008	8	19.1
SEG W 009	9	19.1
SEG W 010	10	19.1
SEG W 011	11	19.1
SEG W 012	12	19.1
SEG W 013	13	19.1
SEG W 014	14	19.1
SEG W 015	15	19.1
SEG W 016	16	19.1
SEG W 017	17	19.1
SEG W 018	18	19.1
SEG W 019	19	19.1
SEG W 020	20	19.1
SEG W 021	21	19.1
SEG W 022	22	19.1
SEG W 023	23	19.1
SEG W 024	24	19.1
SEG W 025	25	19.1
SEG W 026	26	19.1
SEG W 027	27	19.1
SEG W 028	28	19.1
SEG W 029	29	19.1
SEG W 030	30	19.1
SEG W 031	31	19.1
SEG W 032	32	19.1
SEG W 033	33	19.1
SEG W 034	34	19.1
SEG W 035	35	19.1
SEG W 036	36	19.1
SEG W 037	37	19.1
SEG W 038	38	19.1
SEG W 039	39	19.1
SEG W 040	40	19.1
SEG W 042	42	19.1
SEG W 044	44	19.1
SEG W 045	45	19.1
SEG W 047	47	19.1
SEG W 048	48	19.1
SEG W 050	50	19.1
SEG W 052	52	19.1
SEG W 055	55	19.1
SEG W 056	56	19.1
SEG W 058	58	19.1
SEG W 060	60	19.1
SEG W 062	62	19.1
SEG W 063	63	19.1
SEG W 065	65	19.1
SEG W 068	68	19.1
SEG W 070	70	19.1
SEG W 072	72	19.1
SEG W 075	75	19.1
SEG W 078	78	19.1
SEG W 080	80	19.1
SEG W 082	82	19.1
SEG W 085	85	19.1
SEG W 088	88	19.1
SEG W 090	90	19.1
SEG W 092	92	19.1
SEG W 095	95	19.1
SEG W 098	98	19.1
SEG W 100	100	19.1
SEG W 102	102	19.1
SEG W 105	105	19.1
SEG W 108	108	19.1
SEG W 110	110	19.1
SEG W 112	112	19.1
SEG W 115	115	19.1
SEG W 120	120	19.1
SEG W 125	125	19.1
SEG W 130	130	19.1
SEG W 135	135	19.1
SEG W 140	140	19.1
SEG W 145	145	19.1
SEG W 150	150	19.1
SEG W 155	155	19.1
SEG W 160	160	19.1
SEG W 165	165	19.1
SEG W 170	170	19.1
SEG W 175	175	19.1
SEG W 180	180	19.1
SEG W 185	185	19.1
SEG W 190	190	19.1
SEG W 195	195	19.1
SEG W 200	200	19.1
SEG W 210	210	19.1
SEG W 220	220	19.1
SEG W 230	230	19.1
SEG W 240	240	19.1
SEG W 250	250	19.1
SEG W 260	260	19.1
SEG W 270	270	19.1
SEG W 280	280	19.1
SEG W 290	290	19.1
SEG W 300	300	19.1
SEG W 305	305	19.1
SEG W 310	310	19.1
SEG W 315	315	19.1
SEG W 320	320	19.1
SEG W 325	325	19.1
SEG W 330	330	19.1
SEG W 335	335	19.1
SEG W 340	340	19.1
SEG W 345	345	19.1
SEG W 350	350	19.1
SEG W 355	355	19.1
SEG W 360	360	19.1
SEG W 365	365	19.1
SEG W 370	370	19.1
SEG W 375	375	19.1
SEG W 380	380	19.1
SEG W 385	385	19.1
SEG W 390	390	19.1
SEG W 395	395	19.1
SEG W 400	400	19.1
SEG W 410	410	19.1
SEG W 420	420	19.1
SEG W 430	430	19.1
SEG W 440	440	19.1
SEG W 450	450	19.1
SEG W 460	460	19.1
SEG W 470	470	19.1
SEG W 480	480	19.1
SEG W 490	490	19.1
SEG W 500	500	19.1
SEG Z 003	3	19.2
SEG Z 004	4	19.2
SEG Z 005	5	19.2
SEG Z 006	6	19.2
SEG Z 007	7	19.2
SEG Z 008	8	19.2
SEG Z 009	9	19.2
SEG Z 010	10	19.2
SEG Z 011	11	19.2
SEG Z 012	12	19.2
SEG Z 013	13	19.2
SEG Z 014	14	19.2
SEG Z 015	15	19.2
SEG Z 016	16	19.2
SEG Z 017	17	19.2
SEG Z 018	18	19.2
SEG Z 019	19	19.2
SEG Z 020	20	19.2
SEG Z 021	21	19.2
SEG Z 022	22	19.2
SEG Z 023	23	19.2
SEG Z 024	24	19.2
SEG Z 025	25	19.2
SEG Z 026	26	19.2
SEG Z 027	27	19.2
SEG Z 028	28	19.2
SEG Z 029	29	19.2
SEG Z 030	30	19.2
SEG Z 031	31	19.2
SEG Z 032	32	19.2
SEG Z 033	33	19.2
SEG Z 034	34	19.2
SEG Z 035	35	19.2
SEG Z 036	36	19.2
SEG Z 037	37	19.2
SEG Z 038	38	19.2
SEG Z 039	39	19.2
SEG Z 040	40	19.2
SEG Z 042	42	19.2
SEG Z 044	44	19.2
SEG Z 045	45	19.2
SEG Z 046	46	19.2
SEG Z 048	48	19.2
SEG Z 050	50	19.2
SEG Z 052	52	19.2
SEG Z 055	55	19.2
SEG Z 056	56	19.2
SEG Z 058	58	19.2
SEG Z 060	60	19.2
SEG Z 062	62	19.2
SEG Z 063	63	19.2
SEG Z 065	65	19.2
SEG Z 068	68	19.2
SEG Z 070	70	19.2
SEG Z 072	72	19.2
SEG Z 075	75	19.2
SEG Z 078	78	19.2
SEG Z 080	80	19.2
SEG Z 082	82	19.2
SEG Z 085	85	19.2
SEG Z 088	88	19.2
SEG Z 090	90	19.2
SEG Z 095	95	19.2
SEG Z 100	100	19.2
SEG Z 105	105	19.2
SEG Z 110	110	19.2
SEG Z 115	115	19.2
SEG Z 120	120	19.2
SEG Z 125	125	19.2
SEG Z 130	130	19.2
SEG Z 135	135	19.2
SEG Z 140	140	19.2
SEG Z 145	145	19.2
SEG Z 150	150	19.2
SEG Z 155	155	19.2
SEG Z 160	160	19.2
SEG Z 165	165	19.2
SEG Z 170	170	19.2
SEG Z 175	175	19.2
SEG Z 180	180	19.2
SEG Z 185	185	19.2
SEG Z 190	190	19.2
SEG Z 195	195	19.2
SEG Z 200	200	19.2
SEG Z 210	210	19.2
SEG Z 220	220	19.2

Index	d [mm]	Tab.No
SEG Z 230	230	19.2
SEG Z 240	240	19.2
SEG Z 250	250	19.2
SEG Z 260	260	19.2
SEG Z 270	270	19.2
SEG Z 280	280	19.2
SEG Z 290	290	19.2
SEG Z 300	300	19.2
SEG Z 305	305	19.2
SEG Z 310	310	19.2
SEG Z 315	315	19.2
SEG Z 320	320	19.2
SEG Z 325	325	19.2
SEG Z 330	330	19.2
SEG Z 335	335	19.2
SEG Z 340	340	19.2
SEG Z 345	345	19.2
SEG Z 350	350	19.2
SEG Z 355	355	19.2
SEG Z 360	360	19.2
SEG Z 365	365	19.2
SEG Z 370	370	19.2
SEG Z 375	375	19.2
SEG Z 380	380	19.2
SEG Z 385	385	19.2
SEG Z 390	390	19.2
SEG Z 395	395	19.2
SEG Z 400	400	19.2
SEG Z 410	410	19.2
SEG Z 420	420	19.2
SEG Z 430	430	19.2
SEG Z 440	440	19.2
SEG Z 450	450	19.2
SEG Z 460	460	19.2
SEG Z 470	470	19.2
SEG Z 480	480	19.2
SEG Z 490	490	19.2
SEG Z 500	500	19.2
SI 05	5	17.4
SI 06	6	17.4
SI 08	8	17.4
SI 10	10	17.4
SI 12	12	17.4
SI 14	14	17.4
SI 16	16	17.4
SI 18	18	17.4
SI 20	20	17.4
SI 22	22	17.4
SI 25	25	17.4
SI 30	30	17.4
SI 35	35	17.4
SIL 05	5	17.4
SIL 06	6	17.4
SIL 08	8	17.4
SIL 10	10	17.4
SIL 12	12	17.4
SIL 14	14	17.4
SIL 16	16	17.4
SIL 18	18	17.4
SIL 20	20	17.4
SIL 22	22	17.4
SIL 25	25	17.4
SIL 30	30	17.4
SIL 35	35	17.4
SN505	20	15.12
SN506	25	15.12
SN507	30	15.12
SN508	35	15.12
SN509	40	15.12
SN510	45	15.12
SN511	50	15.12
SN512	55	15.12
SN513	60	15.12
SN515	65	15.12
SN516	70	15.12
SN517	75	15.12
SN518	80	15.12
SN519	85	15.12
SN520	90	15.12
SN522	100	15.12
SN524	110	15.12
SN526	115	15.12
SN528	125	15.12
SN530	135	15.12
SN532	140	15.12
SN605	20	15.12
SN606	25	15.12
SN607	30	15.12
SN608	35	15.12
SN609	40	15.12
SN610	45	15.12
SN611	50	15.12
SN612	55	15.12
SN613	60	15.12
SN615	65	15.12
SN616	70	15.12
SN617	75	15.12
SN618	80	15.12
SN619	85	15.12
SN620	90	15.12
SN622	100	15.12
SN624	110	15.12
SN626	115	15.12
SN628	125	15.12
SN630	135	15.12
SN632	140	15.12
SNU505	20	15.13
SNU506	25	15.13
SNU507	30	15.13
SNU508	35	15.13
SNU509	40	15.13
SNU510	45	15.13
SNU511	50	15.13
SNU512	55	15.13
SNU513	60	15.13
SNU515	65	15.13
SNU516	70	15.13
SNU517	75	15.13
SNU518	80	15.13
SNU519	85	15.13
SNU520	90	15.13
SNU522	100	15.13
SNU524	110	15.13
SNU526	115	15.13
SNU528	125	15.13
SNU530	135	15.13
SNU532	140	15.13
SNU605	20	15.13
SNU606	25	15.13
SNU607	30	15.13
SNU608	35	15.13
SNU609	40	15.13
SNU610	45	15.13
SNU611	50	15.13
SNU612	55	15.13
SNU613	60	15.13
SNU615	65	15.13
SNU616	70	15.13
SNU617	75	15.13
SNU619	85	15.13
SNU620	90	15.13
STO 06	6	13.3
STO 08	8	13.3
STO 10	10	13.3
STO 12	12	13.3
STO 15	15	13.3
STO 17	17	13.3
STO 20	20	13.3
STO 25	25	13.3
STO 30	30	13.3
STO 35	35	13.3
STO 40	40	13.3
STO 45	45	13.3
STO 50	50	13.3
T2CC022	22	4.1
T2DC220	220	4.1
T2ED045	45	4.1
T2ED050	50	4.1
T2ED055	55	4.1
T2ED070	70	4.1
T2ED080	80	4.1
T2ED090	90	4.1
T2ED095	95	4.1
T2EE040	40	4.1
T2EE060	60	4.1
T2EE100	100	4.1
T4CB100	100	4.1
T4CB110	110	4.1
T4CB120	120	4.1
T4CB130	130	4.1
T4CB140	140	4.1
T4DB150	150	4.1
T4DB160	160	4.1
T4EB240	240	4.1
T4FE070	70	4.1
T5ED060	60	4.1
T5ED065	65	4.1
T7FC045	45	4.1
T7FC050	50	4.1
T7FC055	55	4.1
T7FC060	60	4.1
T7FC065	65	4.1
T7FC070	70	4.1
T7FC075	75	4.1
T7FC090	90	4.1
TUF1 06.040	6	17.6
TUF1 06.070	6	17.6
TUF1 08.055	8	17.6
TUF1 08.075	8	17.6
TUF1 10.070	10	17.6
TUF1 10.090	10	17.6
TUF1 10.120	10	17.6
TUF1 12.070	12	17.6
TUF1 12.090	12	17.6
TUF1 12.120	12	17.6
TUF1 14.120	14	17.6
TUF1 14.170	14	17.6
TUF1 15.090	15	17.6
TUF1 15.120	15	17.6
TUF1 15.170	15	17.6
TUF1 16.120	16	17.6
TUF1 16.170	16	17.6
TUF1 18.120	18	17.6
TUF1 18.170	18	17.6
TUF1 18.200	18	17.6
TUF1 20.115	20	17.6
TUF1 20.165	20	17.6
TUF1 20.215	20	17.6
TUF1 22.150	22	17.6
TUF1 22.200	22	17.6
TUF1 25.115	25	17.6
TUF1 25.165	25	17.6
TUF1 25.215	25	17.6
TUF1 30.160	30	17.6
TUF1 30.260	30	17.6
TUF1 35.160	35	17.6
TUF1 35.260	35	17.6
TUF1 40.260	40	17.6
TUF1 40.400	40	17.6
TUP1 06.06	6	17.5
TUP1 06.08	6	17.5
TUP1 06.10	6	17.5
TUP1 08.06	8	17.5
TUP1 08.08	8	17.5
TUP1 08.10	8	17.5
TUP1 08.12	8	17.5
TUP1 08.15	8	17.5
TUP1 10.06	10	17.5
TUP1 10.08	10	17.5
TUP1 10.10	10	17.5
TUP1 10.12	10	17.5
TUP1 10.15	10	17.5
TUP1 10.20	10	17.5
TUP1 100.115	100	17.5
TUP1 100.50	100	17.5
TUP1 100.60	100	17.5
TUP1 100.80	100	17.5
TUP1 105.115	105	17.5
TUP1 105.60	105	17.5
TUP1 105.80	105	17.5
TUP1 110.115	110	17.5
TUP1 110.60	110	17.5
TUP1 110.80	110	17.5
TUP1 12.06	12	17.5
TUP1 12.08	12	17.5
TUP1 12.10	12	17.5
TUP1 12.12	12	17.5
TUP1 12.15	12	17.5
TUP1 12.20	12	17.5
TUP1 12.25	12	17.5
TUP1 120.100	120	17.5
TUP1 120.60	120	17.5
TUP1 120.80	120	17.5
TUP1 125.100	125	17.5
TUP1 125.115	125	17.5
TUP1 125.60	125	17.5
TUP1 13.10	13	17.5
TUP1 13.20	13	17.5
TUP1 130.100	130	17.5
TUP1 130.60	130	17.5
TUP1 130.80	130	17.5
TUP1 14.10	14	17.5
TUP1 14.12	14	17.5
TUP1 14.15	14	17.5
TUP1 14.20	14	17.5
TUP1 14.25	14	17.5
TUP1 140.100	140	17.5
TUP1 140.60	140	17.5
TUP1 140.80	140	17.5
TUP1 15.10	15	17.5
TUP1 15.12	15	17.5
TUP1 15.15	15	17.5
TUP1 15.20	15	17.5
TUP1 15.25	15	17.5
TUP1 150.100	150	17.5
TUP1 150.50	150	17.5
TUP1 150.60	150	17.5
TUP1 150.80	150	17.5
TUP1 16.10	16	17.5
TUP1 16.12	16	17.5
TUP1 16.15	16	17.5
TUP1 16.20	16	17.5
TUP1 16.25	16	17.5
TUP1 160.100	160	17.5
TUP1 160.115	160	17.5
TUP1 160.60	160	17.5
TUP1 160.80	160	17.5
TUP1 17.10	17	17.5
TUP1 17.12	17	17.5
TUP1 17.20	17	17.5
TUP1 18.10	18	17.5
TUP1 18.12	18	17.5
TUP1 18.15	18	17.5
TUP1 18.20	18	17.5
TUP1 18.25	18	17.5
TUP1 180.100	180	17.5
TUP1 180.80	180	17.5
TUP1 190.100	190	17.5
TUP1 190.80	190	17.5
TUP1 20.10	20	17.5
TUP1 20.12	20	17.5
TUP1 20.15	20	17.5
TUP1 20.20	20	17.5
TUP1 20.25	20	17.5
TUP1 20.30	20	17.5
TUP1 200.100	200	17.5
TUP1 200.60	200	17.5
TUP1 200.80	200	17.5
TUP1 22.10	22	17.5
TUP1 22.12	22	17.5
TUP1 22.15	22	17.5
TUP1 22.20	22	17.5
TUP1 22.25	22	17.5
TUP1 22.30	22	17.5
TUP1 220.100	220	17.5
TUP1 220.80	220	17.5
TUP1 24.15	24	17.5
TUP1 24.20	24	17.5
TUP1 24.25	24	17.5
TUP1 24.30	24	17.5
TUP1 25.10	25	17.5
TUP1 25.12	25	17.5
TUP1 25.15	25	17.5
TUP1 25.20	25	17.5
TUP1 25.25	25	17.5
TUP1 25.30	25	17.5
TUP1 25.40	25	17.5
TUP1 25.50	25	17.5
TUP1 250.100	250	17.5
TUP1 250.80	250	17.5
TUP1 260.100	260	17.5
TUP1 260.80	260	17.5
TUP1 28.15	28	17.5
TUP1 28.20	28	17.5
TUP1 28.25	28	17.5
TUP1 28.30	28	17.5
TUP1 28.40	28	17.5
TUP1 280.100	280	17.5
TUP1 280.80	280	17.5
TUP1 30.12	30	17.5
TUP1 30.15	30	17.5
TUP1 30.20	30	17.5
TUP1 30.25	30	17.5
TUP1 30.30	30	17.5
TUP1 30.40	30	17.5
TUP1 300.100	300	17.5
TUP1 300.80	300	17.5
TUP1 32.20	32	17.5
TUP1 32.30	32	17.5
TUP1 32.40	32	17.5
TUP1 35.12	35	17.5
TUP1 35.15	35	17.5
TUP1 35.20	35	17.5
TUP1 35.25	35	17.5
TUP1 35.30	35	17.5
TUP1 35.40	35	17.5
TUP1 35.50	35	17.5
TUP1 38.15	38	17.5
TUP1 38.30	38	17.5
TUP1 38.40	38	17.5
TUP1 40.12	40	17.5
TUP1 40.20	40	17.5
TUP1 40.25	40	17.5
TUP1 40.30	40	17.5
TUP1 40.40	40	17.5
TUP1 40.50	40	17.5
TUP1 45.20	45	17.5
TUP1 45.25	45	17.5
TUP1 45.30	45	17.5
TUP1 45.40	45	17.5
TUP1 45.50	45	17.5
TUP1 50.20	50	17.5
TUP1 50.30	50	17.5
TUP1 50.40	50	17.5
TUP1 50.50	50	17.5
TUP1 50.60	50	17.5
TUP1 55.30	55	17.5
TUP1 55.40	55	17.5
TUP1 55.50	55	17.5
TUP1 55.60	55	17.5
TUP1 60.30	60	17.5
TUP1 60.40	60	17.5
TUP1 60.50	60	17.5
TUP1 60.60	60	17.5
TUP1 60.70	60	17.5
TUP1 65.30	65	17.5
TUP1 65.40	65	17.5
TUP1 65.50	65	17.5
TUP1 65.60	65	17.5
TUP1 65.70	65	17.5
TUP1 70.40	70	17.5
TUP1 70.50	70	17.5
TUP1 70.60	70	17.5
TUP1 70.70	70	17.5
TUP1 70.80	70	17.5
TUP1 75.30	75	17.5
TUP1 75.40	75	17.5
TUP1 75.50	75	17.5
TUP1 75.60	75	17.5
TUP1 75.70	75	17.5
TUP1 75.80	75	17.5
TUP1 80.100	80	17.5
TUP1 80.40	80	17.5
TUP1 80.50	80	17.5
TUP1 80.60	80	17.5
TUP1 80.70	80	17.5
TUP1 80.80	80	17.5
TUP1 85.100	85	17.5
TUP1 85.40	85	17.5
TUP1 85.60	85	17.5
TUP1 85.80	85	17.5
TUP1 90.100	90	17.5
TUP1 90.40	90	17.5
TUP1 90.50	90	17.5
TUP1 90.60	90	17.5
TUP1 90.80	90	17.5
TUP1 95.100	95	17.5
TUP1 95.20	95	17.5
TUP1 95.50	95	17.5
TUP1 95.60	95	17.5
TUP1 95.80	95	17.5
TUP2 10.10	10	17.5
TUP2 10.15	10	17.5
TUP2 10.20	10	17.5
TUP2 100.50	100	17.5
TUP2 100.80	100	17.5
TUP2 100.95	100	17.5
TUP2 105.110	105	17.5
TUP2 105.60	105	17.5
TUP2 105.80	105	17.5
TUP2 105.95	105	17.5
TUP2 110.110	110	17.5
TUP2 110.60	110	17.5
TUP2 110.80	110	17.5
TUP2 110.95	110	17.5
TUP2 12.10	12	17.5
TUP2 12.15	12	17.5
TUP2 12.20	12	17.5
TUP2 120.110	120	17.5
TUP2 120.60	120	17.5
TUP2 120.80	120	17.5
TUP2 125.110	125	17.5
TUP2 125.60	125	17.5
TUP2 130.100	130	17.5
TUP2 130.50	130	17.5
TUP2 130.60	130	17.5
TUP2 130.80	130	17.5
TUP2 14.15	14	17.5
TUP2 14.20	14	17.5
TUP2 140.100	140	17.5

https://nppnovoteh.com

23. INDEX

Index	d [mm]	Tab.No
TUP2 140.50	140	17.5
TUP2 140.60	140	17.5
TUP2 140.80	140	17.5
TUP2 15.15	15	17.5
TUP2 15.20	15	17.5
TUP2 15.25	15	17.5
TUP2 150.100	150	17.5
TUP2 150.50	150	17.5
TUP2 150.60	150	17.5
TUP2 150.80	150	17.5
TUP2 16.15	16	17.5
TUP2 16.20	16	17.5
TUP2 16.25	16	17.5
TUP2 160.100	160	17.5
TUP2 160.50	160	17.5
TUP2 160.60	160	17.5
TUP2 160.80	160	17.5
TUP2 170.100	170	17.5
TUP2 170.50	170	17.5
TUP2 170.80	170	17.5
TUP2 18.15	18	17.5
TUP2 18.20	18	17.5
TUP2 18.25	18	17.5
TUP2 180.100	180	17.5
TUP2 180.50	180	17.5
TUP2 180.60	180	17.5
TUP2 180.80	180	17.5
TUP2 190.100	190	17.5
TUP2 190.120	190	17.5
TUP2 190.50	190	17.5
TUP2 190.60	190	17.5
TUP2 190.80	190	17.5
TUP2 20.15	20	17.5
TUP2 20.20	20	17.5
TUP2 20.25	20	17.5
TUP2 20.30	20	17.5
TUP2 200.100	200	17.5
TUP2 200.120	200	17.5
TUP2 200.50	200	17.5
TUP2 200.60	200	17.5
TUP2 200.80	200	17.5
TUP2 22.15	22	17.5
TUP2 22.25	22	17.5
TUP2 220.100	220	17.5
TUP2 220.120	220	17.5
TUP2 220.50	220	17.5
TUP2 220.60	220	17.5
TUP2 220.80	220	17.5
TUP2 240.100	240	17.5
TUP2 240.120	240	17.5
TUP2 240.50	240	17.5
TUP2 240.60	240	17.5
TUP2 240.80	240	17.5
TUP2 25.15	25	17.5
TUP2 25.20	25	17.5
TUP2 25.25	25	17.5
TUP2 25.30	25	17.5
TUP2 250.100	250	17.5
TUP2 250.120	250	17.5
TUP2 250.50	250	17.5
TUP2 250.60	250	17.5
TUP2 250.80	250	17.5
TUP2 260.100	260	17.5
TUP2 260.120	260	17.5
TUP2 260.50	260	17.5
TUP2 260.60	260	17.5
TUP2 260.80	260	17.5
TUP2 28.20	28	17.5
TUP2 28.30	28	17.5
TUP2 280.100	280	17.5
TUP2 280.120	280	17.5
TUP2 280.50	280	17.5
TUP2 280.60	280	17.5
TUP2 280.80	280	17.5
TUP2 30.20	30	17.5
TUP2 30.25	30	17.5
TUP2 30.30	30	17.5
TUP2 30.40	30	17.5
TUP2 300.100	300	17.5
TUP2 300.120	300	17.5
TUP2 300.50	300	17.5
TUP2 300.60	300	17.5
TUP2 300.80	300	17.5
TUP2 35.20	35	17.5
TUP2 35.30	35	17.5
TUP2 35.35	35	17.5
TUP2 35.40	35	17.5
TUP2 40.20	40	17.5
TUP2 40.30	40	17.5
TUP2 40.40	40	17.5

Index	d [mm]	Tab.No
TUP2 40.50	40	17.5
TUP2 45.20	45	17.5
TUP2 45.30	45	17.5
TUP2 45.40	45	17.5
TUP2 45.45	45	17.5
TUP2 45.50	45	17.5
TUP2 50.30	50	17.5
TUP2 50.40	50	17.5
TUP2 50.50	50	17.5
TUP2 50.55	50	17.5
TUP2 50.60	50	17.5
TUP2 55.30	55	17.5
TUP2 55.40	55	17.5
TUP2 55.50	55	17.5
TUP2 55.60	55	17.5
TUP2 60.30	60	17.5
TUP2 60.40	60	17.5
TUP2 60.50	60	17.5
TUP2 60.60	60	17.5
TUP2 65.40	65	17.5
TUP2 65.60	65	17.5
TUP2 70.40	70	17.5
TUP2 70.50	70	17.5
TUP2 70.65	70	17.5
TUP2 70.80	70	17.5
TUP2 75.40	75	17.5
TUP2 75.60	75	17.5
TUP2 75.80	75	17.5
TUP2 80.40	80	17.5
TUP2 80.60	80	17.5
TUP2 80.80	80	17.5
TUP2 85.40	85	17.5
TUP2 85.60	85	17.5
TUP2 85.80	85	17.5
TUP2 90.40	90	17.5
TUP2 90.60	90	17.5
TUP2 90.80	90	17.5
TUP2 90.90	90	17.5
TUW1 10	8	17.7
TUW1 12	10	17.7
TUW1 14	12	17.7
TUW1 16	14	17.7
TUW1 18	16	17.7
TUW1 20	18	17.7
TUW1 22	20	17.7
TUW1 24	22	17.7
TUW1 26	24	17.7
TUW1 28	25	17.7
TUW1 32	30	17.7
TUW1 38	35	17.7
TUW1 42	40	17.7
TUW1 48	45	17.7
TUW1 52	50	17.7
TUW1 62	60	17.7
TUW2 10	8	17.7
TUW2 12	10	17.7
TUW2 14	12	17.7
TUW2 16	14	17.7
TUW2 18	16	17.7
TUW2 20	18	17.7
TUW2 22	20	17.7
TUW2 24	22	17.7
TUW2 26	24	17.7
TUW2 28	25	17.7
TUW2 32	30	17.7
TUW2 38	35	17.7
TUW2 42	40	17.7
TUW2 48	45	17.7
TUW2 52	50	17.7
TUW2 62	60	17.7
TUZ1 125.10	x	17.8
TUZ1 125.15	x	17.8
TUZ1 150.20	x	17.8
TUZ1 150.25	x	17.8
TUZ2 125.10	x	17.8
TUZ2 125.15	x	17.8
TUZ2 150.20	x	17.8
TUZ2 150.25	x	17.8
U200	18	8.3
U201	20	8.3
U202	24	8.3
U203	26	8.3
U204	30	8.3
U205	36	8.3
U206	42	8.3
U207	48	8.3
U208	55	8.3
U209	60	8.3
U210	62	8.3
U211	72	8.3

Index	d [mm]	Tab.No
U212	78	8.3
U213	82	8.3
U214	88	8.3
U215	92	8.3
U216	98	8.3
U217	105	8.3
U218	110	8.3
U220	125	8.3
U222	135	8.3
U224	145	8.3
U226	160	8.3
U228	170	8.3
U230	180	8.3
U232	190	8.3
U234	200	8.3
U236	210	8.3
U238	230	8.3
U240	240	8.3
U244	260	8.3
U248	290	8.3
U252	305	8.3
U260	360	8.3
U264	380	8.3
U268	400	8.3
U272	430	8.3
U305	38	8.3
U306	45	8.3
U307	52	8.3
U308	60	8.3
U309	65	8.3
U310	72	8.3
U311	80	8.3
U312	85	8.3
U313	90	8.3
U314	98	8.3
U315	105	8.3
U316	110	8.3
U317	115	8.3
U318	120	8.3
U320	135	8.3
U322	150	8.3
U324	165	8.3
U326	177	8.3
U328	190	8.3
U330	200	8.3
U332	215	8.3
U334	220	8.3
U336	240	8.3
U338	255	8.3
U340	270	8.3
U405	42	8.3
U406	50	8.3
U407	58	8.3
U408	65	8.3
U409	72	8.3
U410	80	8.3
U411	88	8.3
U412	95	8.3
U413	100	8.3
U414	110	8.3
U415	115	8.3
U416	125	8.3
U417	130	8.3
U418	140	8.3
U420	155	8.3
UC201	12	14.5
UC202	15	14.5
UC203	17	14.5
UC204	20	14.5
UC205	25	14.5
UC206	30	14.5
UC207	35	14.5
UC208	40	14.5
UC209	45	14.5
UC210	50	14.5
UC211	55	14.5
UC212	60	14.5
UC213	65	14.5
UC214	70	14.5
UC215	75	14.5
UC216	80	14.5
UC217	85	14.5
UC218	90	14.5
UC305	25	14.5
UC306	30	14.5
UC307	35	14.5
UC308	40	14.5
UC309	45	14.5
UC310	50	14.5
UC311	55	14.5

Index	d [mm]	Tab.No
UC312	60	14.5
UC313	65	14.5
UC314	70	14.5
UC315	75	14.5
UC316	80	14.5
UC317	85	14.5
UC318	90	14.5
UC319	95	14.5
UCF201	12	15.3
UCF202	15	15.3
UCF203	17	15.3
UCF204	20	15.3
UCF205	25	15.3
UCF206	30	15.3
UCF207	35	15.3
UCF208	40	15.3
UCF209	45	15.3
UCF210	50	15.3
UCF211	55	15.3
UCF212	60	15.3
UCF213	65	15.3
UCF214	70	15.3
UCF215	75	15.3
UCF216	80	15.3
UCF217	85	15.3
UCF218	90	15.3
UCF305	25	15.3
UCF306	30	15.3
UCF307	35	15.3
UCF308	40	15.3
UCF309	45	15.3
UCF310	50	15.3
UCF311	55	15.3
UCF312	60	15.3
UCF313	65	15.3
UCF314	70	15.3
UCF315	75	15.3
UCF316	80	15.3
UCF317	85	15.3
UCF318	90	15.3
UCF319	95	15.3
UCFC201	12	15.5
UCFC202	15	15.5
UCFC203	17	15.5
UCFC204	20	15.5
UCFC205	25	15.5
UCFC206	30	15.5
UCFC207	35	15.5
UCFC208	40	15.5
UCFC209	45	15.5
UCFC210	50	15.5
UCFC211	55	15.5
UCFC212	60	15.5
UCFC213	65	15.5
UCFC214	70	15.5
UCFC215	75	15.5
UCFC216	80	15.5
UCFC217	85	15.5
UCFC218	90	15.5
UCFCX05	25	15.5
UCFCX06	30	15.5
UCFCX07	35	15.5
UCFCX08	40	15.5
UCFCX09	45	15.5
UCFCX10	50	15.5
UCFCX11	55	15.5
UCFCX12	60	15.5
UCFCX13	65	15.5
UCFCX14	70	15.5
UCFCX15	75	15.5
UCFCX16	80	15.5
UCFCX17	85	15.5
UCFL201	12	15.4
UCFL202	15	15.4
UCFL203	17	15.4
UCFL204	20	15.4
UCFL205	25	15.4
UCFL206	30	15.4
UCFL207	35	15.4
UCFL208	40	15.4
UCFL209	45	15.4
UCFL210	50	15.4
UCFL211	55	15.4
UCFL212	60	15.4
UCFL213	65	15.4
UCFL214	70	15.4
UCFL215	75	15.4
UCFL216	80	15.4
UCFL217	85	15.4
UCFL218	90	15.4

Index	d [mm]	Tab.No
UCFL305	25	15.4
UCFL306	30	15.4
UCFL307	35	15.4
UCFL308	40	15.4
UCFL309	45	15.4
UCFL310	50	15.4
UCFL311	55	15.4
UCFL312	60	15.4
UCFL313	65	15.4
UCFL314	70	15.4
UCFL315	75	15.4
UCFL316	80	15.4
UCFL317	85	15.4
UCFL318	90	15.4
UCFL319	95	15.4
UCFLX05	25	15.4
UCFLX06	30	15.4
UCFLX07	35	15.4
UCFLX08	40	15.4
UCFLX09	45	15.4
UCFLX10	50	15.4
UCFX05	25	15.3
UCFX06	30	15.3
UCFX07	35	15.3
UCFX08	40	15.3
UCFX09	45	15.3
UCFX10	50	15.3
UCFX11	55	15.3
UCFX12	60	15.3
UCFX13	65	15.3
UCFX14	70	15.3
UCFX15	75	15.3
UCFX16	80	15.3
UCFX17	85	15.3
UCP201	12	15.1
UCP202	15	15.1
UCP203	17	15.1
UCP204	20	15.1
UCP205	25	15.1
UCP206	30	15.1
UCP207	35	15.1
UCP208	40	15.1
UCP209	45	15.1
UCP210	50	15.1
UCP211	55	15.1
UCP212	60	15.1
UCP213	65	15.1
UCP214	70	15.1
UCP215	75	15.1
UCP216	80	15.1
UCP217	85	15.1
UCP218	90	15.1
UCP305	25	15.1
UCP306	30	15.1
UCP307	35	15.1
UCP308	40	15.1
UCP309	45	15.1
UCP310	50	15.1
UCP311	55	15.1
UCP312	60	15.1
UCP313	65	15.1
UCP314	70	15.1
UCP315	75	15.1
UCP316	80	15.1
UCP317	85	15.1
UCP318	90	15.1
UCP319	95	15.1
UCPA201	12	15.2
UCPA202	15	15.2
UCPA203	17	15.2
UCPA204	20	15.2
UCPA205	25	15.2
UCPA206	30	15.2
UCPA207	35	15.2
UCPA208	40	15.2
UCPA209	45	15.2
UCPA210	50	15.2
UCPA211	55	15.2
UCPA212	60	15.2
UCPA213	65	15.2
UCPX05	25	15.1
UCPX06	30	15.1
UCPX07	35	15.1
UCPX08	40	15.1
UCPX09	45	15.1
UCPX10	50	15.1
UCPX11	55	15.1
UCPX12	60	15.1
UCPX13	65	15.1
UCPX14	70	15.1

https://nppnovoteh.com

Index	d [mm]	Tab.No
UCPX15	75	15.1
UCPX16	80	15.1
UCPX17	85	15.1
UCT201	12	15.6
UCT202	15	15.6
UCT203	17	15.6
UCT204	20	15.6
UCT205	25	15.6
UCT206	30	15.6
UCT207	35	15.6
UCT208	40	15.6
UCT209	45	15.6
UCT210	50	15.6
UCT211	55	15.6
UCT212	60	15.6
UCT213	65	15.6
UCT214	70	15.6
UCT215	75	15.6
UCT216	80	15.6
UCT217	85	15.6
UCT305	25	15.6
UCT306	30	15.6
UCT307	35	15.6
UCT308	40	15.6
UCT309	45	15.6
UCT310	50	15.6
UCT311	55	15.6
UCT312	60	15.6
UCT313	65	15.6
UCT314	70	15.6
UCT315	75	15.6
UCT316	80	15.6
UCT317	85	15.6
UCT318	90	15.6
UCT319	95	15.6
UCTX05	25	15.6
UCTX06	30	15.6
UCTX07	35	15.6
UCTX08	40	15.6
UCTX09	45	15.6
UCTX10	50	15.6
UCTX11	55	15.6
UCTX12	60	15.6
UCTX13	65	15.6
UCTX14	70	15.6
UCTX15	75	15.6
UCTX16	80	15.6
UCTX17	85	15.6
UCX05	25	14.5
UCX06	30	14.5
UCX07	35	14.5
UCX08	40	14.5
UCX09	45	14.5
UCX10	50	14.5
UCX11	55	14.5
UCX12	60	14.5
UCX13	65	14.5
UCX14	70	14.5
UCX15	75	14.5
UCX16	80	14.5
UCX17	85	14.5
UK205	25	14.6
UK206	30	14.6
UK207	35	14.6
UK208	40	14.6
UK209	45	14.6
UK210	50	14.6
UK211	55	14.6
UK212	60	14.6
UK213	65	14.6
UK215	75	14.6
UK216	80	14.6
UK217	85	14.6
UK218	90	14.6
UKF205	20	15.8
UKF206	25	15.8
UKF207	30	15.8
UKF208	35	15.8
UKF209	40	15.8
UKF210	45	15.8
UKF211	50	15.8
UKF212	55	15.8
UKF213	60	15.8
UKF215	65	15.8
UKF216	70	15.8
UKF217	75	15.8
UKF218	80	15.8
UKFC205	20	15.10
UKFC206	25	15.10
UKFC207	30	15.10

Index	d [mm]	Tab.No
UKFC208	35	15.10
UKFC209	40	15.10
UKFC210	45	15.10
UKFC211	50	15.10
UKFC212	55	15.10
UKFC213	60	15.10
UKFC215	65	15.10
UKFC216	70	15.10
UKFC217	75	15.10
UKFC218	80	15.10
UKFL205	20	15.9
UKFL206	25	15.9
UKFL207	30	15.9
UKFL208	35	15.9
UKFL209	40	15.9
UKFL210	45	15.9
UKFL211	50	15.9
UKFL212	55	15.9
UKFL213	60	15.9
UKFL215	65	15.9
UKFL216	70	15.9
UKFL217	75	15.9
UKFL218	80	15.9
UKP205	20	15.7
UKP206	25	15.7
UKP207	30	15.7
UKP208	35	15.7
UKP209	40	15.7
UKP210	45	15.7
UKP211	50	15.7
UKP212	55	15.7
UKP213	60	15.7
UKP215	65	15.7
UKP216	70	15.7
UKP217	75	15.7
UKP218	80	15.7
UKT205	20	15.11
UKT206	25	15.11
UKT207	30	15.11
UKT208	35	15.11
UKT209	40	15.11
UKT210	45	15.11
UKT211	50	15.11
UKT212	55	15.11
UKT213	60	15.11
UKT215	65	15.11
UKT216	70	15.11
UKT217	75	15.11
WS81102	15	10.1
WS81103	17	10.1
WS81104	20	10.1
WS81105	25	10.1
WS81106	30	10.1
WS81107	35	10.1
WS81108	40	10.1
WS81109	45	10.1
WS81110	50	10.1
WS81111	55	10.1
WS81112	60	10.1
WS81113	65	10.1
WS81114	70	10.1
WS81115	75	10.1
WS81116	80	10.1
WS81117	85	10.1
WS81118	90	10.1
WS81120	100	10.1
WS81122	110	10.1
WS81124	120	10.1
WS81126	130	10.1
WS81128	140	10.1
WS81130	150	10.1
WS81132	160	10.1
WS81134	170	10.1
WS81136	180	10.1
WS81138	190	10.1
WS81140	200	10.1
WS81144	220	10.1
WS81148	240	10.1
WS81152	260	10.1
WS81156	280	10.1
WS81160	300	10.1
WS81164	320	10.1
WS81168	340	10.1
WS81172	360	10.1
WS81176	380	10.1
WS81180	400	10.1
WS81184	420	10.1
WS81188	440	10.1
WS81192	460	10.1
WS81196	480	10.1

Index	d [mm]	Tab.No
WS81206	30	10.1
WS81207	35	10.1
WS81208	40	10.1
WS81209	45	10.1
WS81210	50	10.1
WS81211	55	10.1
WS81212	60	10.1
WS81213	65	10.1
WS81214	70	10.1
WS81215	75	10.1
WS81216	80	10.1
WS81217	85	10.1
WS81218	90	10.1
WS81220	100	10.1
WS81222	110	10.1
WS81224	120	10.1
WS81226	130	10.1
WS81228	140	10.1
WS81230	150	10.1
WS81232	160	10.1
WS81234	170	10.1
WS81236	180	10.1
WS81238	190	10.1
WS81240	200	10.1
WS81244	220	10.1
WS81248	240	10.1
WS81252	260	10.1
WS81256	280	10.1
WS81260	300	10.1
WS81264	320	10.1
WS81268	340	10.1
WS81272	360	10.1
WS81276	380	10.1
WS81280	400	10.1
WS81284	420	10.1
WS81288	440	10.1
WS81292	460	10.1
WS81296	480	10.1
WS89306	30	10.1
WS89307	35	10.1
WS89308	40	10.1
WS89309	45	10.1
WS89310	50	10.1
WS89311	55	10.1
WS89312	60	10.1
WS89313	65	10.1
WS89314	70	10.1
WS89315	75	10.1
WS89316	80	10.1
WS89317	85	10.1
WS89318	90	10.1
WS89320	100	10.1
WS89322	110	10.1
WS89324	120	10.1
WS89326	130	10.1
WS89328	140	10.1
WS89330	150	10.1
WS89412	60	10.1
WS89413	65	10.1
WS89414	70	10.1
WS89415	75	10.1
WS89416	80	10.1
WS89417	85	10.1
WS89418	90	10.1
WS89420	100	10.1
WS89422	110	10.1
WS89424	120	10.1
WS89426	130	10.1
WS89428	140	10.1
WS89430	150	10.1
WS89432	160	10.1
WS89434	170	10.1
WS89436	180	10.1
WS89438	190	10.1
WS89440	200	10.1
WS89444	220	10.1
WS89448	240	10.1
WS89452	260	10.1
WS89456	280	10.1
WS89460	300	10.1
WS89464	320	10.1

https://nppnovoteh.com

24. INDEX OF PHOTOS







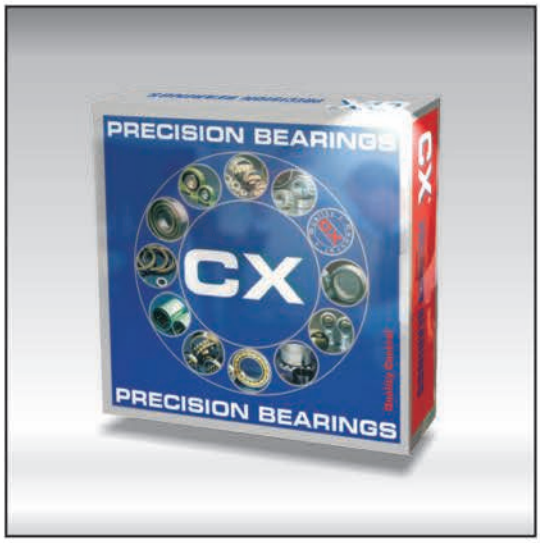



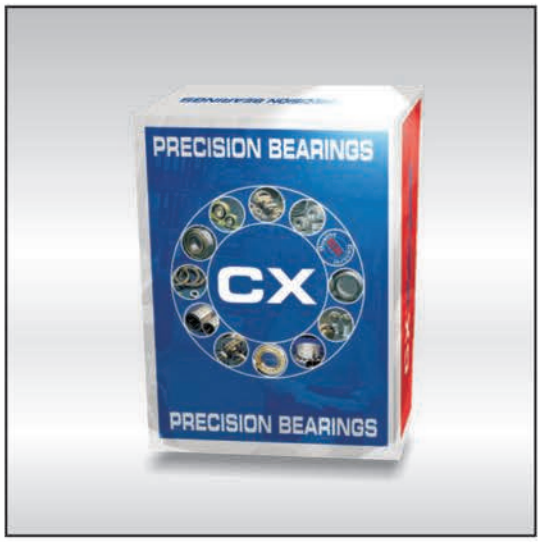

The value of **CX**® products is additionally emphasized through special, newly designed packaging. Additional designation by means of the EAN-13 bar-code, which is used only by leading brands in the world, will make your goods turnover much easier.

For your convenience **CX**® bearings are packaged in individual and omnibus packages.

https://nppnovoteh.com



1.1 Single-row deep groove ball bearings – miniature (1 mm – 9 mm)
1.2 Single-row ball deep groove bearings – dimensions from 10 mm – non-sealed
1.3 Single-row deep groove ball bearings - dimensions from 10 mm – sealed RS
1.4 Single-row deep groove ball bearings - dimensions from 10 mm – sealed ZZ

https://nppnovoteh.com



1.5 Single-row deep groove ball bearings for magnetos
1.6 Double-row deep groove ball bearings
2.1 Single-row angular-contact ball bearings – standard
2.2 Single-row angular-contact ball bearings – for assembly in pairs

https://nppnovoteh.com



2.3 Single-row angular-contact high-speed ball bearings
2.4 Double-row angular-contact ball bearings
2.5.1 Single-row angular-contact double-direction ball bearings (QJ)
2.5.2 Single-row angular-contact double-direction ball bearings (Q)

https://nppnovoteh.com



3.1 Self-aligning ball bearings
4.1 Tapered roller bearings

https://nppnovoteh.com



5.1 Single-row cylindrical roller bearings (NU, NUB, NUC)
5.2 Single-row cylindrical roller bearings (NJ, NJP)
5.3 Single-row cylindrical roller bearings (NH, NUJ)
5.4 Angular rings for cylindrical roller bearings (HJ)

https://nppnovoteh.com



5.5 Single-row cylindrical roller bearings (NUP)
5.6 Single-row cylindrical roller bearings (N, NF, NP)
5.7 Multi-row cylindrical roller bearings (NN, NN..K)
5.8 Multi-row cylindrical roller bearings (NNU, NNU..K)

https://nppnovoteh.com



5.9 Cageless cylindrical roller bearings (NCF, NJF, NNC, NNCF, NNCL, NNF)
6.1.1 Solid needle roller bearings (NA, NKI)
6.1.3 Solid needle roller bearings (NAO)



6.2.1 Thin-walled needle roller bearings (HK)
6.2.2 Thin-walled needle roller bearings (BK)
6.3.1 Needle roller and cage assemblies (K)
6.3.2 Needle roller and cage assemblies (KK)

https://nppnovoteh.com



6.4



6.5

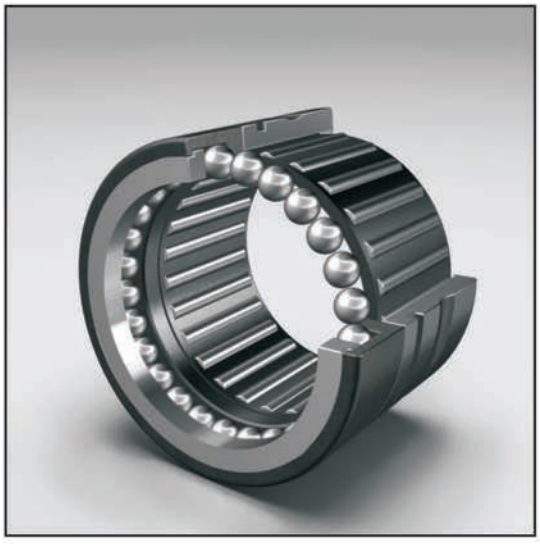

6.6



6.7

6.4 Needle roller and cage assemblies (KBK, KZK)
6.5 Adjustable needle roller bearings (PNA)
6.6 Combined needle roller bearings (NX)
6.7 Combined needle roller bearings (NKIA & NKIB)

https://nppnovoteh.com



6.7 Combined needle roller bearings (NKIA & NKIB)
6.8 Combined needle roller bearings (NKX)
6.9 Combined needle roller bearings (NKXR)
6.10 One-way clutches (HF)

https://nppnovoteh.com



6.11 Internal rings for needle and cylindrical roller bearings (IR)
7.1 Single-row and double-row spherical roller bearings
7.2 Spherical roller bearings with sdapter sleeve

https://nppnovoteh.com



7.3 Spherical roller bearings with withdrawal sleeve
8.1 Single-direction thrust ball bearings
8.2 Double-direction thrust ball bearings

https://nppnovoteh.com



8.2 Double- direction thrust ball bearings with spherical outer rings
8.3 Spherical washers for thrust ball bearings
9.1 Double- direction angular contact thrust ball bearings
10.1 Cylindrical roller thrust bearings

https://nppnovoteh.com

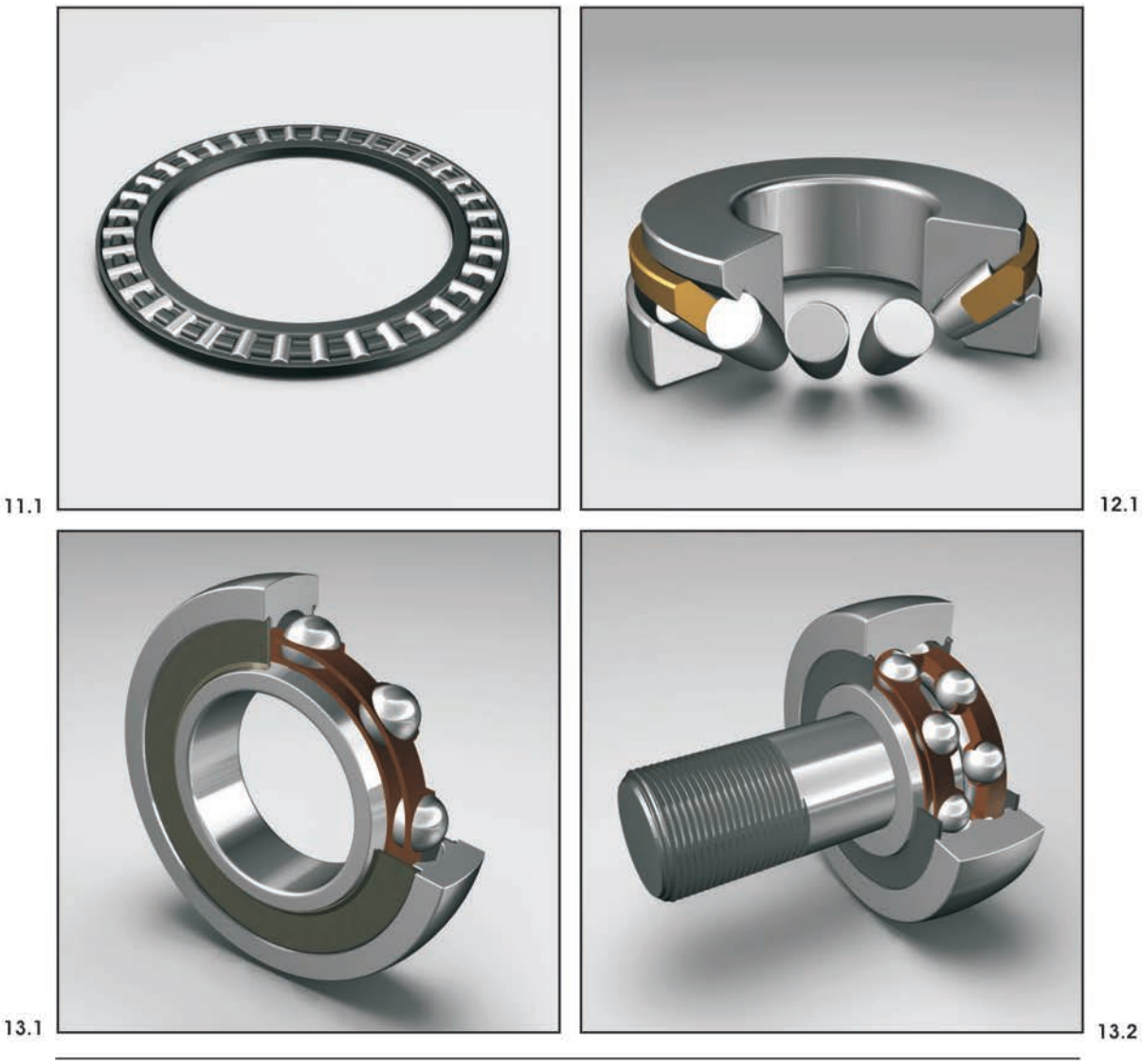

11.1 Thrust needle roller and cage assemblies (AXK)
12.1 Spherical roller thrust bearings
13.1 Guide rollers with a hole
13.2 Guide rollers with a mandrel

https://nppnovoteh.com

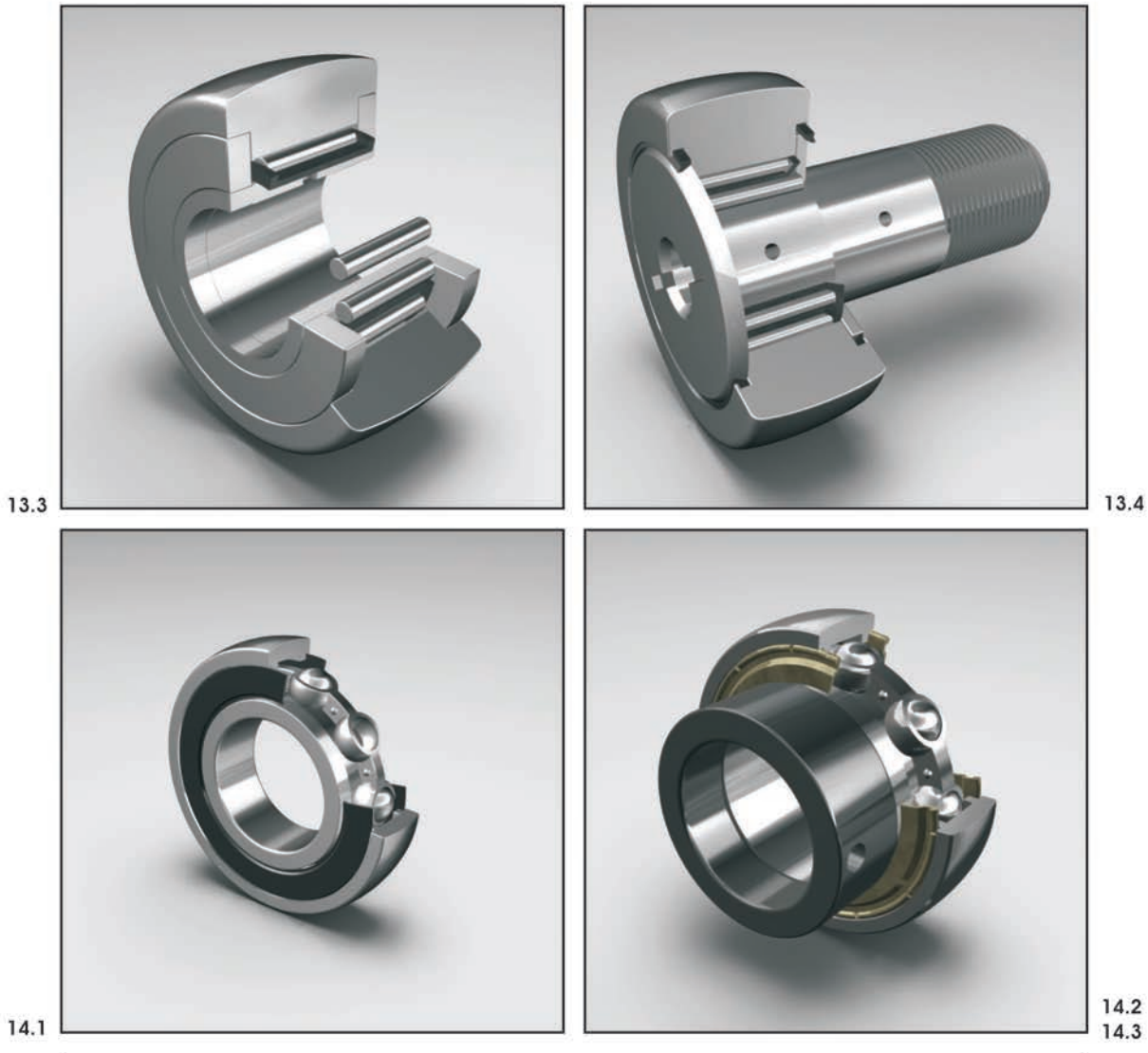

13.3 Rolling rollers with a hole
13.4 Rolling rollers with a mandrel
14.1 Insert ball bearings (K6)
14.2 Insert ball bearings (SA)
14.3 Insert ball bearings (FD)

https://nppnovoteh.com



14.4 Insert ball bearings (SB)
14.5 Insert ball bearings (UC)
14.6 Insert ball bearings (UK)
15.1 Cast-iron bearings units with insert ball bearings (UCP)
15.7 Cast-iron bearings units with insert ball bearings (UKP)
15.2 Cast-iron bearings units with insert ball bearings (UCPA)

https://nppnovoteh.com



15.3
15.8



15.4
15.9

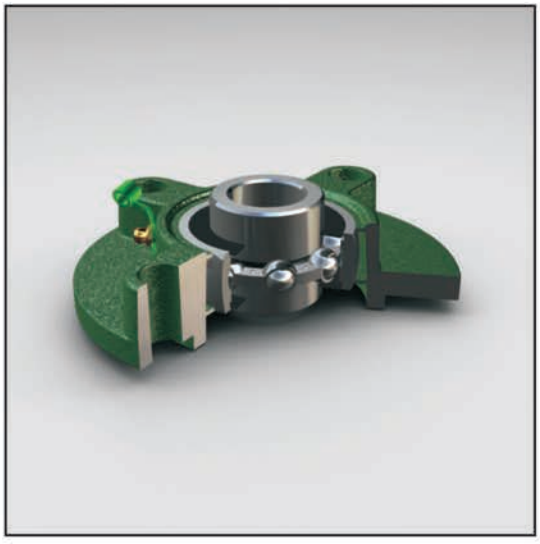

15.5
15.10



15.6
15.11

15.3 / 15.8 Cast-iron bearings units with insert ball bearings (UCF / UKF)
15.4 / 15.9 Cast-iron bearings units with insert ball bearings (UCFL / UKFL)
15.5 / 15.10 Cast-iron bearings units with insert ball bearings (UCFC / UKFC)
15.6 / 15.11 Cast-iron bearings units with insert ball bearings (UCT / UKT)

15.12

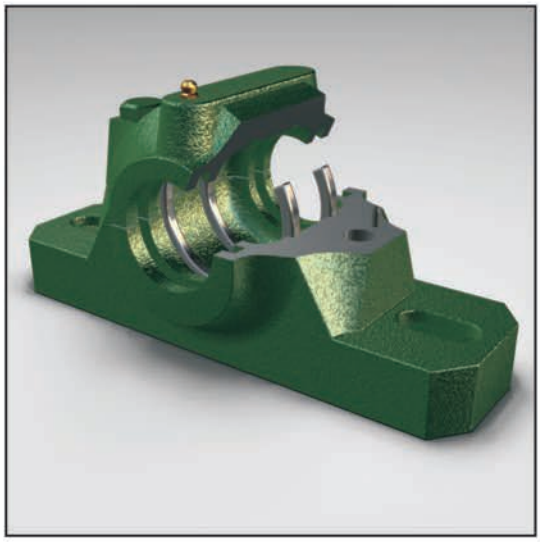



15.13

16.1.1



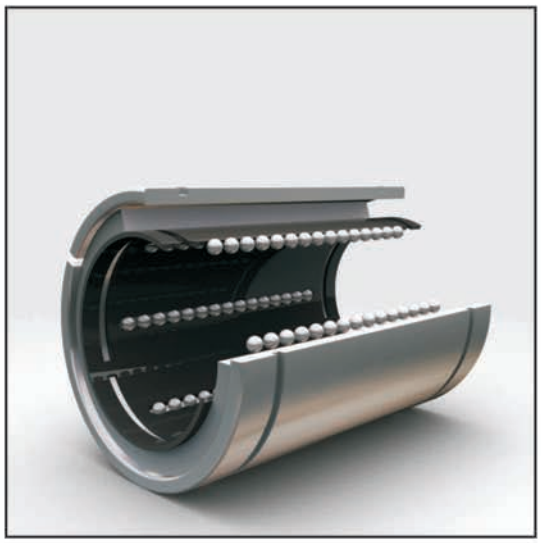

16.1.2

15.12 Split bearing housings for spherical roller and self aligning bearings (SN)
15.13 Split bearing housings for spherical roller and self aligning bearings (SNU)
16.1.1 Thin-walled linear ball bearings
16.1.2 Solid linear ball bearings

https://nppnovoteh.com

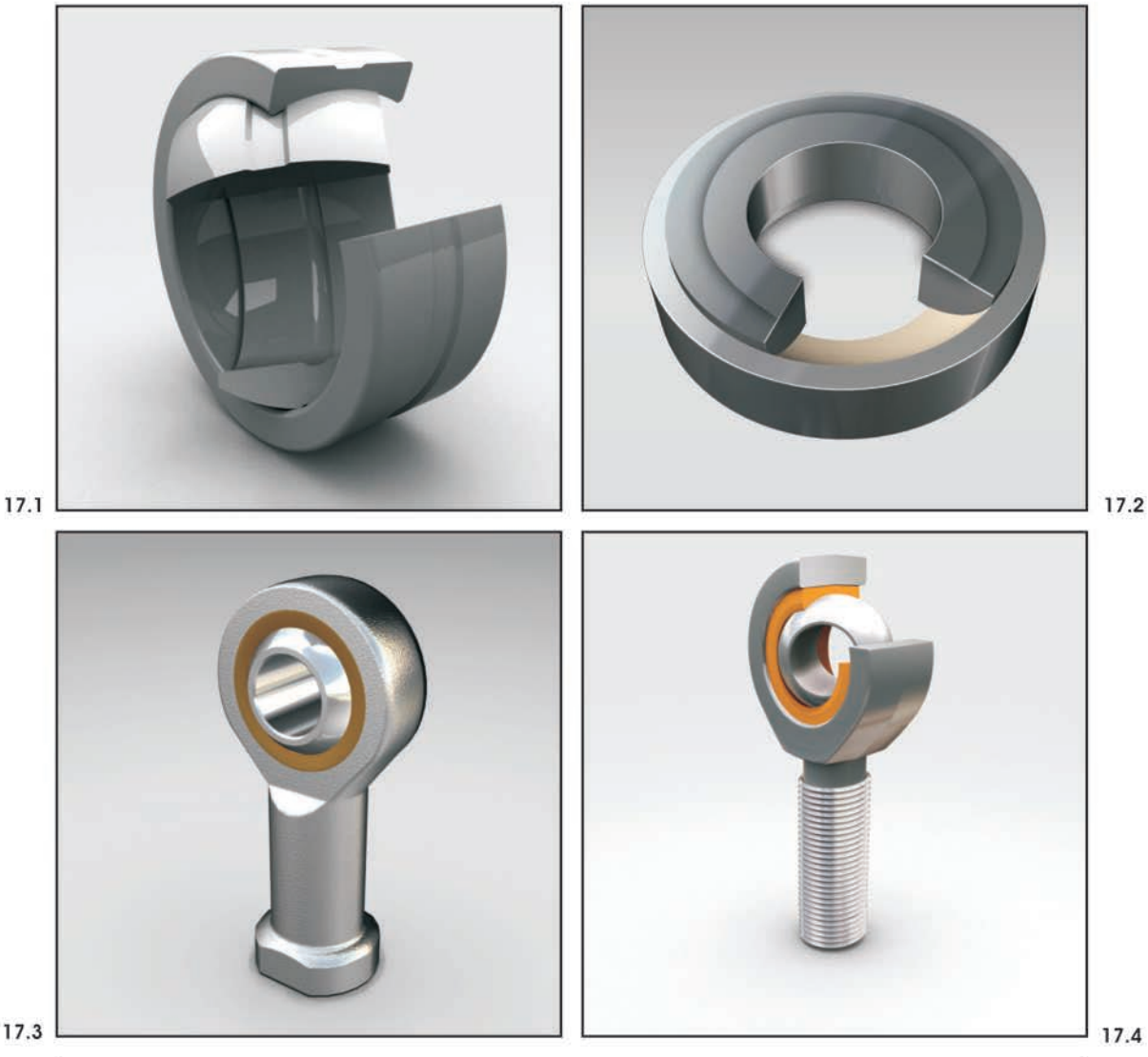

17.1 Radial spherical plain bearings
17.2 Thrust spherical plain bearings
17.3 Rod ends (SA)
17.4 Rod ends (SI)

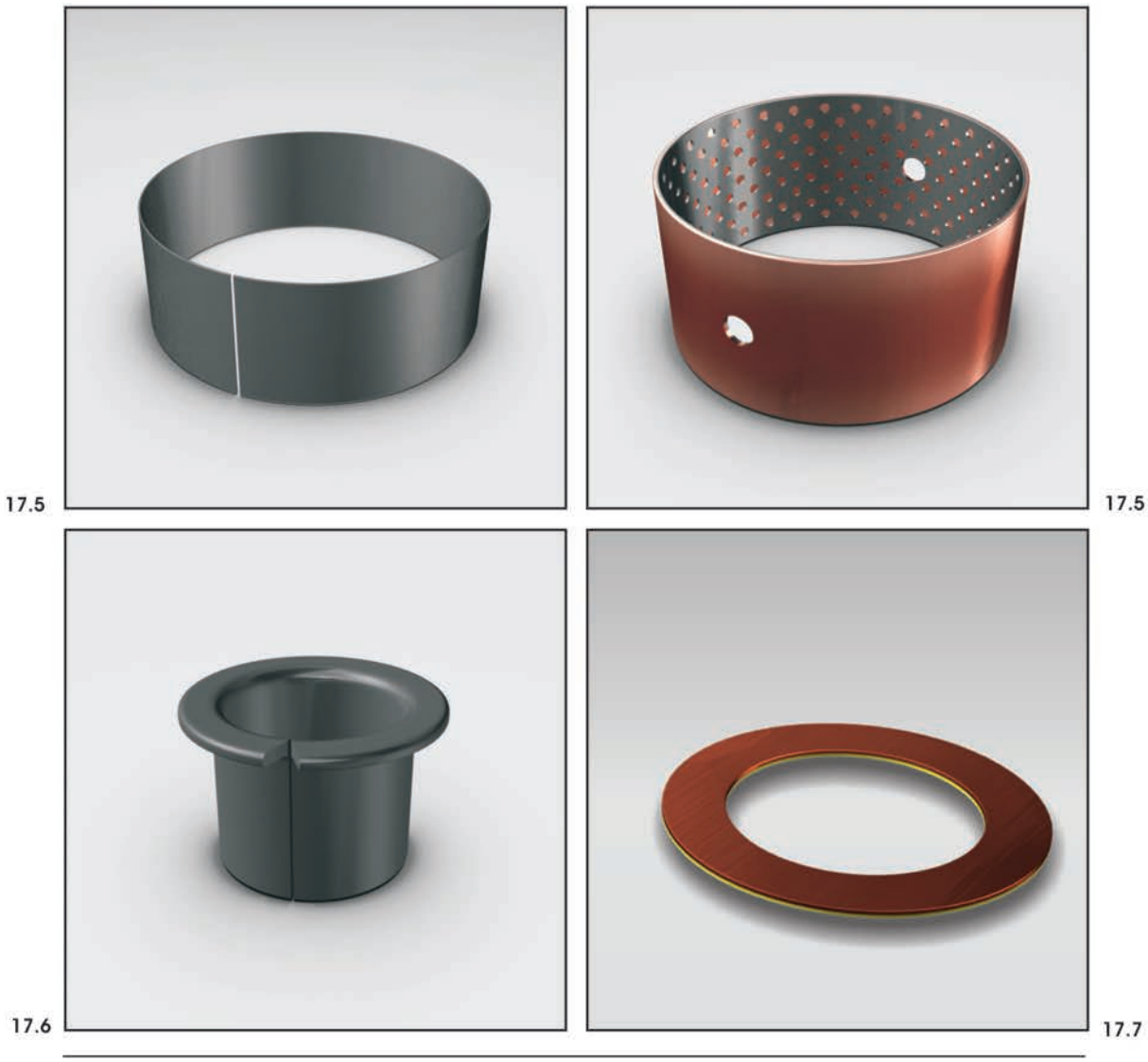

17.5 Slide bearings (TUP)
17.6 Slide bearings (TUF)
17.7 Slide bearings (TUW)

https://nppnovoteh.com



18.1



18.2



18.3

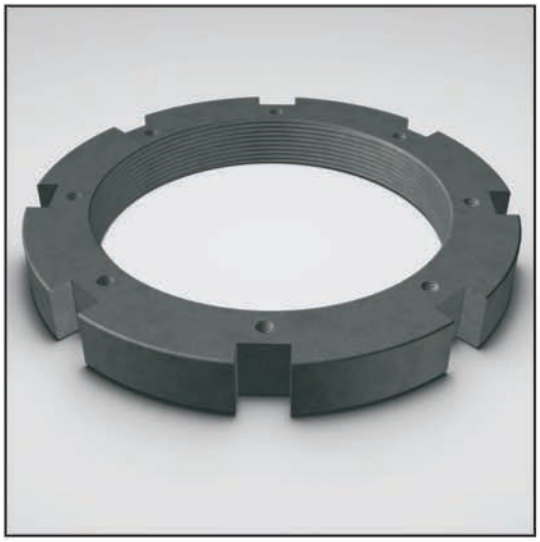

18.4

18.1 Withdrawal sleeves
18.2 Adapter sleeves
18.3 Lock nuts (KM)
18.4 Lock nuts (HM)

https://nppnovoteh.com

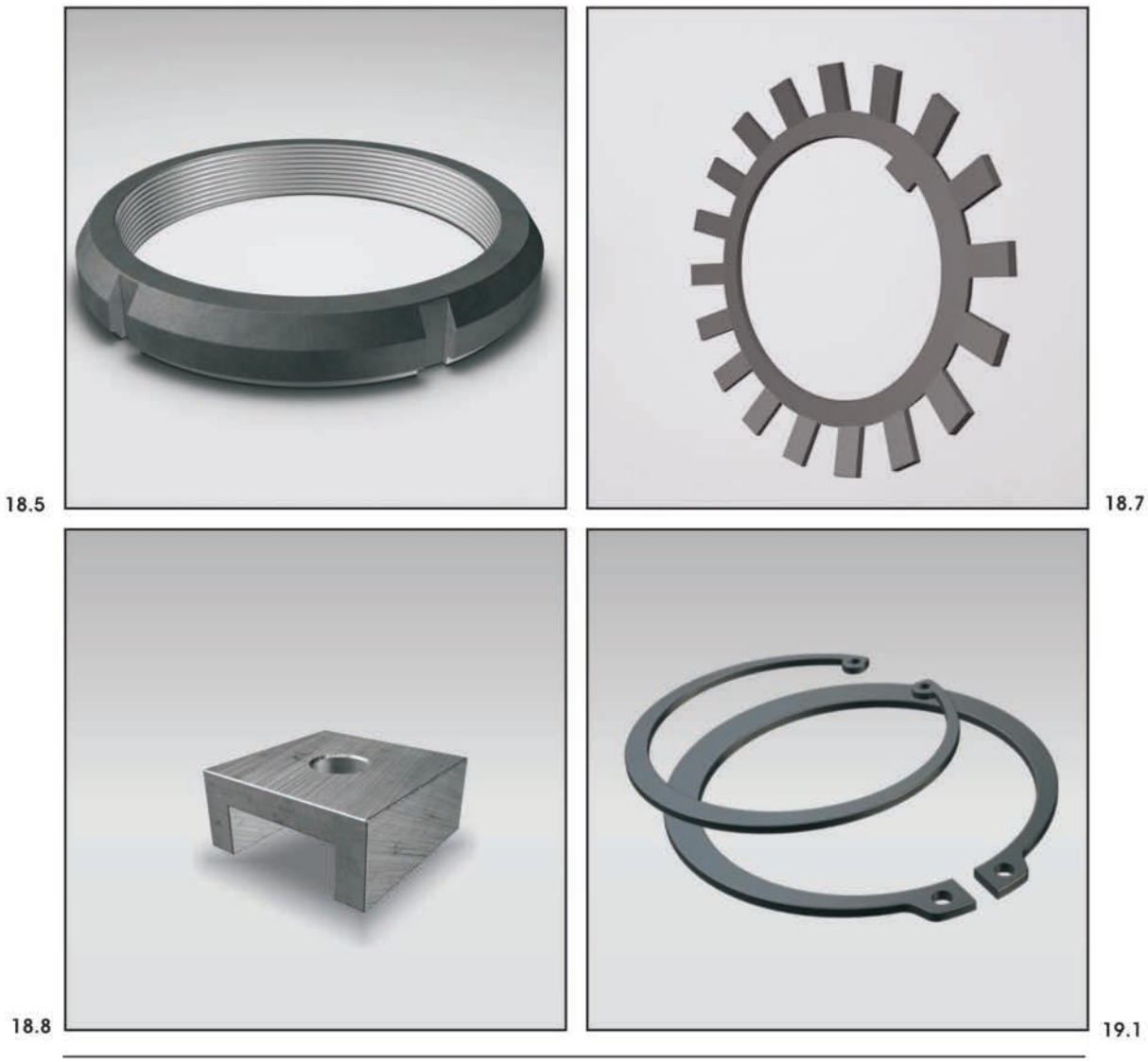

18.5 Lock nuts (KMT)
18.7 Lock washers (MB)
18.8 Lock washers (MS)
19.1 Inner and outer snap rings

https://nppnovoteh.com



20.0



21.1.1



21.1.2

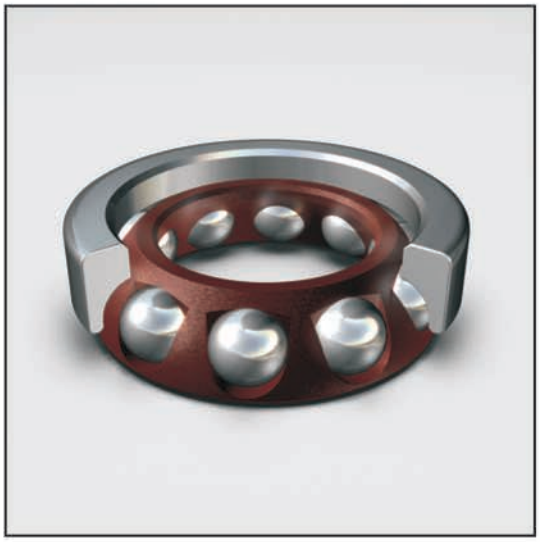

21.1.3

20.0 Rolling elements
21.1.1 Cardan joint
21.1.2 Water pump bearing
21.1.3 Clutch bearing

https://nppnovoteh.com

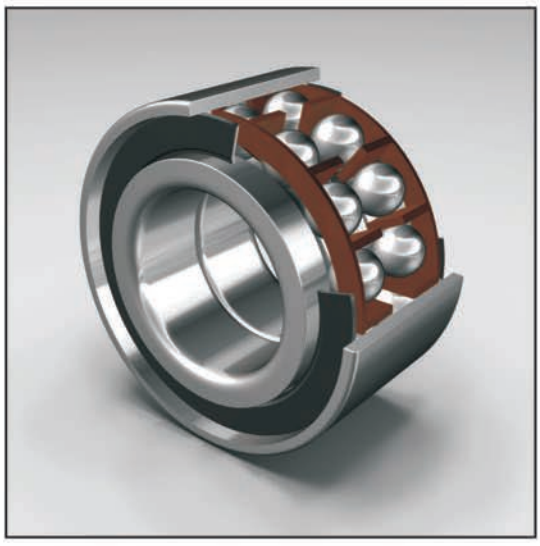

21.1.4

21.1.4 Wheel hub bearing